Ordinance 19314

ATTACHMENT A

SALLAL WATER ASSOCIATION

KING COUNTY **WASHINGTON**

WATER SYSTEM PLAN

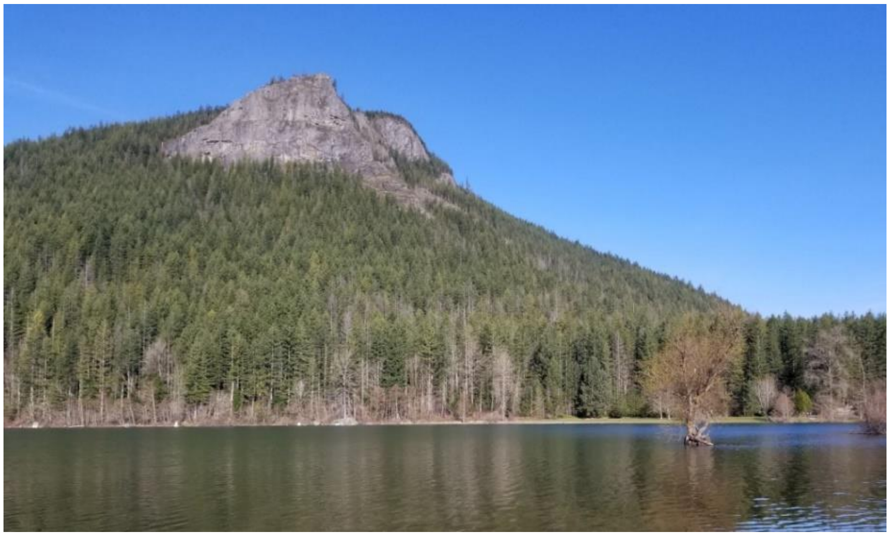

G&O #17462
SEPTEMBER 2020

Gray & Osborne, Inc.
CONSULTING ENGINEERS

ATTACHMENT A

SALLAL WATER ASSOCIATION

KING COUNTY WASHINGTON

sallal WATER ASSOCIATION

WATER SYSTEM PLAN

WARREN W. PERKINS
33786

9/21/20

G&O #17462
SEPTEMBER 2020

Gray & Osborne, Inc.
CONSULTING ENGINEERS

TABLE OF CONTENTS

EXECUTIVE SUMMARY

CHAPTER 1 – WATER SYSTEM DESCRIPTION

CHAPTER 2 – BASIC PLANNING DATA AND WATER DEMAND FORECASTING

CHAPTER 3 – WATER QUALITY SYSTEM ANALYSIS

CHAPTER 4 – WATER SYSTEM HYDRAULIC ANALYSIS

CHAPTER 5 – WATER USE EFFICIENCY

CHAPTER 6 – SOURCE PROTECTION PLAN

CHAPTER 7 – DISTRIBUTION FACILITIES DESIGN AND CONSTRUCTION STANDARDS

CHAPTER 8 – OPERATION AND MAINTENANCE PROGRAM

CHAPTER 9 – CAPITAL IMPROVEMENT PROGRAM

CHAPTER 10 – FINANCIAL PROGRAM

LIST OF TABLES

LIST OF FIGURES

APPENDICES

EXECUTIVE SUMMARY

This Water System Plan provides a long-term planning strategy for the Sallal Water Association over the 10-, and 20- year planning periods. The Plan was prepared consistent with the Department of Health requirements as specified in the Washington Administrative Code (WAC) Chapter 246-290. The Plan represents a commitment by Sallal to pursue and implement the Plan's recommendations and capital improvements.

Sallal operates a Group A water system adjacent to and within the easterly portion of North Bend, King County Washington. The system has approximately 1,664 connections. Two of the connections are master meters to the Wilderness Rim system, a Group A system serving 626 residential connections.

The Association was incorporated in 1969. Originally the water source was from Seattle Public Utilities from the Chester Morse Reservoir. In 1986, Sallal moved to groundwater and has provided groundwater exclusively since that time. The two main sources are located north of Rattlesnake Lake in the SPU watershed. A third source is located to the east of Trucktown, just outside the east boundary of North Bend. A fourth well is scheduled to come online in 2020 between the two main sources.

Until the fall of 2019, Sallal provided non-chlorinated water to it members. However, in the fall of 2019 *E. Coli* was found in one of its two major wells. Total coliform and *E. Coli* were also found elsewhere in the system. As a result, Sallal is now a chlorinated system.

The topographic relief in the system is significant ranging from 1,080 to 480 feet. Sallal owns and maintains 26 pressure reducing valve stations and 4 booster stations. Generally, water moves north from its main sources and storage, downhill into the Snoqualmie Valley and then to the east end of the system.

Sallal's water service population at the end of 2018 was approximately 6,356 people served by 1,664 connections, for 2,678 ERU. Sallal has a water right for 696 acre-feet per year and 1,691 gallons per minute instantaneous capacity. The annual water rights are anticipated to be sufficient for increased demand to serve 3,334 ERU. At the projected growth rate the water rights should be sufficient through 2032 (Chapters 2 and 4). The instantaneous water rights are anticipated to be sufficient through the planning period. Increased water use efficiency will allow Sallal to serve additional ERU as discussed in Chapter 5.

Sallal is in negotiations with North Bend on the exchange of water between Sallal and North Bend. The intent is to optimize the use of water between the two purveyors in the upper Snoqualmie Valley, while maintaining minimum instream flows in the Snoqualmie River.

Sallal is deficient in storage. A new 240,000-gallon concrete reservoir is scheduled to come online in 2020. This reservoir will provide a modest storage surplus. Additional storage will be needed within the next 6 years. The size and timing of the additional storage will depend upon the rate of growth and whether or not Sallal and North Bend come to terms on a water exchange contract.

Sallal's distribution system provides pressure at greater than 30 psi throughout the system. There are localized fire flow deficiencies which are addressed in the Capital Improvement Program.

The Capital Improvement Program is presented in Chapter 9. Major projects include a new well, a new reservoir, a new headquarters facility and connection to North Bend. Other projects are generally water main projects and an additional reservoir scheduled for 2024. Chapter 10 describes Sallal's historical financial stability and discusses the implementation of the Capital Improvement Plan outlined in Chapter 9.

CHAPTER 1

WATER SYSTEM DESCRIPTION

OBJECTIVE

The objective of this chapter is to present background information for the Sallal Water Association's (Sallal) Water System Plan (Plan). This Plan assesses the current and future capabilities of Sallal's water system, and recommends needed improvements to allow the system to provide water service throughout the planning period and meet the statutory requirements in Chapter 246-290-100 WAC, Chapter 246-293-250 WAC, and Chapter 246-295 WAC.

The chapter presents information on ownership and management of the system, system background data, the existing system facilities inventory, related planning documents, adjacent purveyors, existing and future service areas and characteristics, service area policies, and conditions of service.

OWNERSHIP AND MANAGEMENT

The Sallal Water Association (Sallal) is a member owned, non-profit cooperative that owns and maintains a Class A water system. Sallal was incorporated in 1969 in accordance with RCW 24.06. The DOH ID No. is #75560Q. The Water Facilities Inventory and Operating Permit for Sallal are provided in Appendix A.

Sallal rents space for its office and shop at 44021 SE Tanner Road, Suite E, North Bend, Washington and is open 8:00 a.m. – 4:00 p.m. Monday through Thursday and 7:00 a.m. – 3:00 p.m. Fridays. The phone number is (425) 888-3650. Sallal's mailing address is:

Sallal Water Association
P.O. Box 378
44021 SE Tanner Road, Suite E
North Bend, Washington 98045-0378

The general location of the Sallal service area is shown in Figure 1-1.

Sallal is governed by a Board of Trustees, elected by the members who own memberships in the organization. The Board consists of seven trustees: a President, Vice President, Secretary, Treasurer and three at large Trustees. The Trustees are elected for 3 years with staggered terms of office.

Sallal currently employs a staff of four, including a General Manager, Water System Superintendent, Water System Operator, and one full-time office staff to handle all billing and accounting.

The Board of Trustees is elected to provide direction and oversight in the operation and development of the system. Staff is responsible for the day-to-day operation and management of the system on behalf of the Board of Trustees and the members.

HISTORY OF SYSTEM DEVELOPMENT AND GROWTH

Planning for Sallal began in the spring of 1967. Landowners in the area were concerned about the availability of water because of past experiences with loss of production in shallow wells in the summer. Some of the residents' water supplies came from springs, creeks and rivers; a concern because of the high risk of microbial contamination.

Meetings were held and canvassing was done by area residents in the summer of 1967. A study was completed to investigate forming an agency to act as a purveyor in the area. Landowners decided to form a cooperative as this form of organization would be most acceptable to those interested in being served water. The engineering firm of Lee Johnson and Associates was engaged. They recommended pursuing a water supply from the City of Seattle. Sallal was incorporated in early 1969. A loan was negotiated from the Federal Government in the early spring, and construction began in the summer. Delays were encountered in securing the source of water from the City of Seattle's Chester Morse Reservoir; however, an agreement was reached and water was delivered to the members in the early spring of 1970.

Sallal encountered a difficult financial time for some years because of the uncertainty of the location of Interstate 90, which impacted water main relocations and caused proposed plats to be deleted, etc. Growth was slow.

The Wilderness Rim Maintenance Corporation (Wilderness Rim), the water purveyor of the Plat of Wilderness Rim, became a wholesale customer of Sallal in 1969.

A Comprehensive Water System Plan was adopted by the Sallal Board of Trustees in December of 1979 and submitted to King County Council for approval. The plan was approved by the Council on April 2, 1980, with the passage of King County Ordinance #4797, which imposed conditions of approval.

In 1983 and 1985, two deep wells were drilled under an agreement with the City of Seattle, to provide Sallal with a reliable water source during the reconstruction project on the Masonry Dam and for the future. In 1986, pumps were installed in the wells, and a storage tank was constructed inside the City of Seattle's Cedar River Watershed. This tank was a joint effort, with Wilderness Rim participating financially in the cost of the facility. The conversion to ground water from the two wells replaced surface water from the Seattle Watershed as the source of supply, and eliminated the need for treatment of Sallal's water supply.

ATTACHMENT A

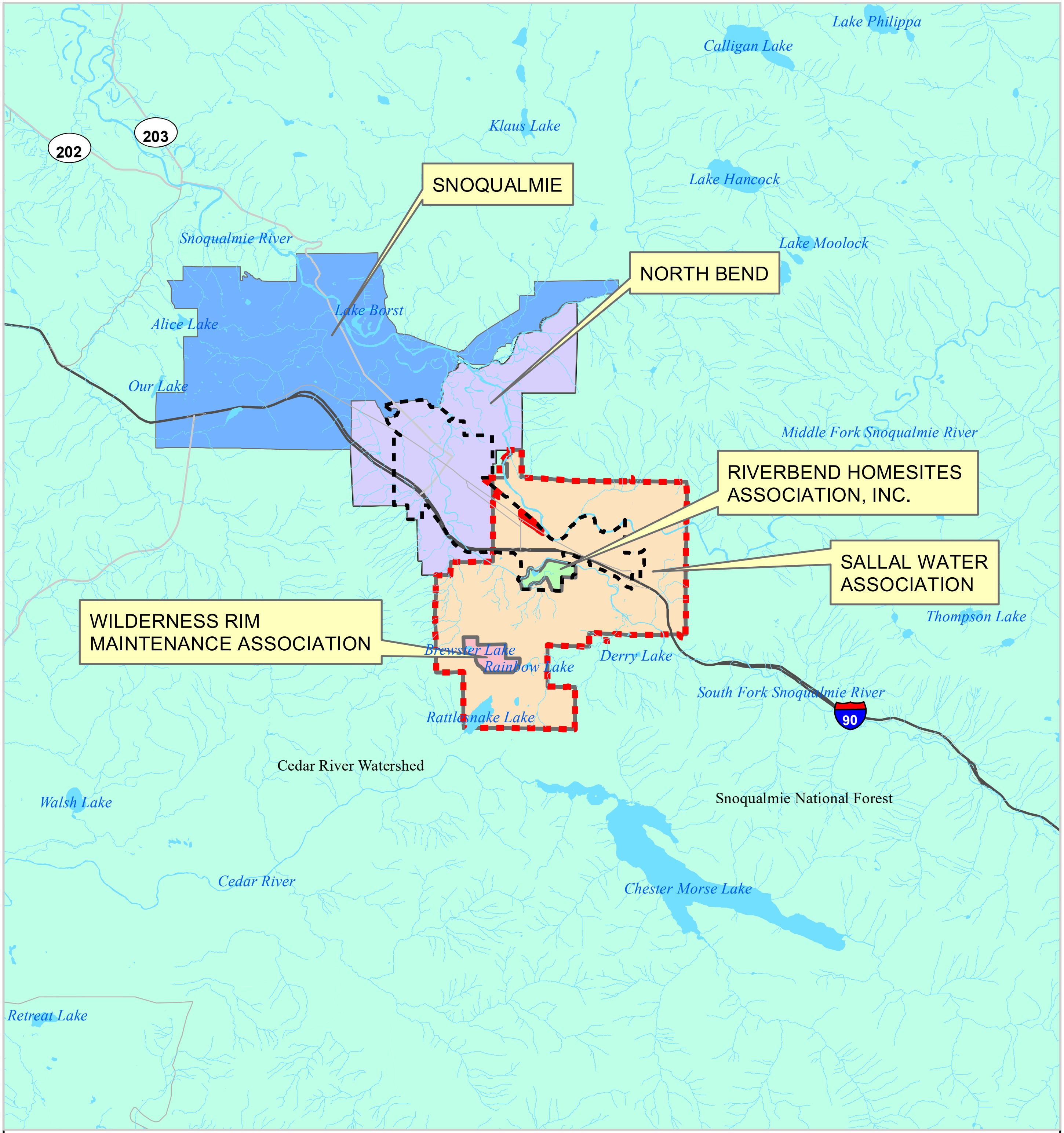

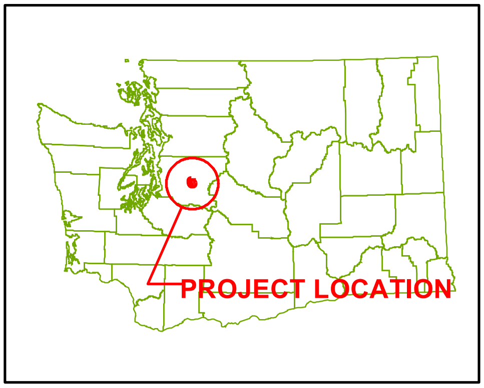

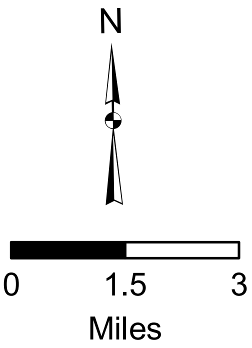

SALLAL WATER ASSOCIATION

WATER SYSTEM PLAN
FIGURE 1-1
VICINITY MAP

Gray & Osborne, Inc.
CONSULTING ENGINEERS

M:\Sallal\17462 Sallal WSP\gis\LOCATION.mxd

In 1987, a third well was drilled near the I-90 interchange at 468th Avenue SE to supplement the original wells. An emergency intertie was also constructed in 1987 to allow Sallal to provide water to the City of North Bend.

A fourth well was drilled in 2018 and is anticipated to come online in 2020. It is located between Wells 1 and 2 and will provide a redundant source of supply. The well will operate under the existing water right for Wells 1 and 2.

In 1990, under the East King County Coordinated Water System Plan, Sallal's service area was greatly expanded eastward. Some of the eastern portion of the expanded service area is mountainous and not considered developable. Sallal retained this extended service area with the hope that it may provide opportunities for other sources of water. However, with the passage of the Municipal Water Law of 2003, water purveyors have a duty to serve water within their retail service areas subject to the following provisions of RCW 43.20.260:

- Service can be available in a timely and reasonable manner.
- The Purveyor has sufficient water rights to provide the service.
- The Purveyor has sufficient capacity to serve the water in a safe and reliable manner as determined by the DOH.
- It is consistent with the applicable land use plans.

Due to the requirement that a Purveyor has a duty to serve and since Sallal has source capacity limitations Sallal reduced its service area to the east approximately 15 years ago so that its eastern boundary more closely reflects the extent of the area actually served and potentially servable at reasonable cost. The old service area can be seen in Appendix B (Water Rights) near the end of the appendix.

As of the end of 2018 Sallal served 2,290 connections, including the Wilderness Rim HOA as individual connections. Wilderness Rim consists of 626 connections served by Sallal through two wholesale meters.

BYLAWS

As a cooperative, Sallal has no authority to impose or enforce ordinances or do land use planning, in the manner of governmental agencies. The adopted Bylaws and Rules of Sallal govern the transactions and operation of the system in relation to serving the members. Copies of the Sallal's Bylaws and Rules are presented in Appendix C.

Provision of water service and operation of a non-profit corporation must comply with the applicable rules and regulations imposed from several different jurisdictions. The following are the jurisdictions and the types of rules and regulations they have imposed on Sallal's operation:

Federal

- Safe Drinking Water Act
- Compliance with Endangered Species Act
- Potential Army Corps of Engineers permits for any work within wetland areas and streams
- Requirements pertinent to the (USDA) Rural Development loans

State of Washington

- Rules and regulations of the State Department of Ecology
- Rules and regulations of the State Department of Health
- Rules and regulations of the State Department of Revenue (Non-Profit Corporation)

King County

- Health Department Guidelines
- Development/Building Permits
- Grading Permits
- Right-of-Way Permits
- King County Comprehensive Plan (e.g., Zoning)
- King County Fire Marshal's Determination of Fire Flow Requirements
- King County Road Standards

Special Purpose Districts

- King County Fire Department (KCFD #38), and Eastside Fire and Rescue (formerly Issaquah fire Department, KCFD #38)
- Sallal Water Association Board of Trustees/Bylaws and Rules and Regulations

ADJACENT PURVEYORS

The adjacent purveyors are the City of North Bend, Wilderness Rim Maintenance Corporation and Riverbend Homesites Association. The latter two are wholly contained within Sallal's service area. Sallal provides water to Wilderness Rim on a wholesale basis via two master meters. Riverbend has its own source of water, though water may be supplied to Riverbend from Sallal through manual activation of an emergency intertie. North Bend and Sallal maintain an emergency intertie on Cedar Falls Way which allows Sallal to transfer water to North Bend. Pumping is required to deliver water from

ATTACHMENT A

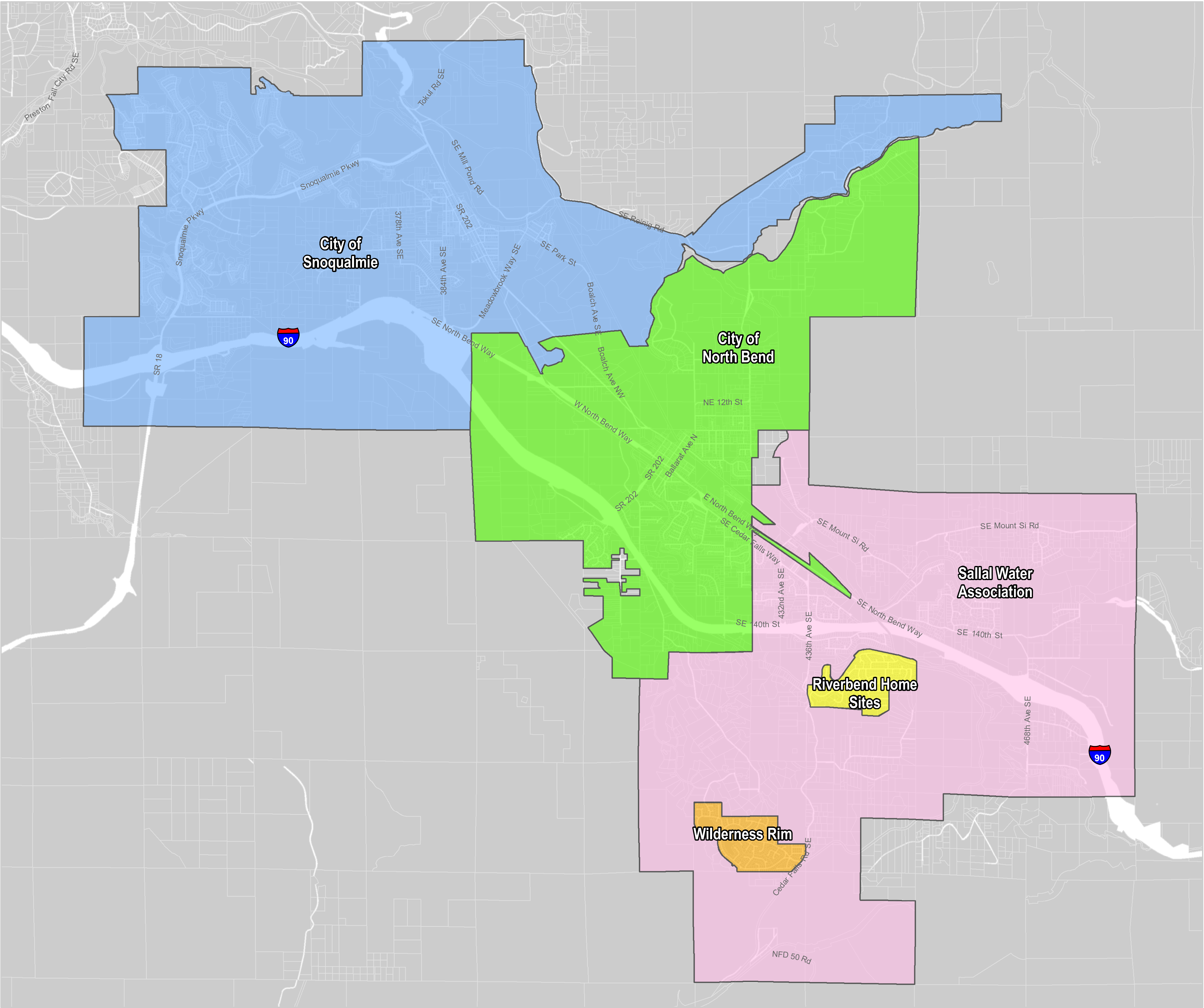

LEGEND:

ADJACENT PURVEYOR SERVICE AREA BOUNDARIES

- 🟩 City of North Bend
- 🟨 Riverbend Homesites Association, Inc.
- 🟪 Sallal Water Association
- 🟦 City of Snoqualmie
- 🟧 Wilderness Rim Maintenance Association
- ⬜ Parcels

Notes:
1. Sallal provides wholesale water to Wilderness Rim.
2. Sallal does not provide water to Riverbend. Rivervend has its own source of supply.

N

0 2,300 4,600 9,200 Feet

SCALE 1" = 4600'

SALLAL WATER ASSOCIATION

WATER SYSTEM PLAN
FIGURE 1-2
ADJACENT WATER PURVEYOR
SERVICE AREAS

Gray & Osborne, Inc.
CONSULTING ENGINEERS

M:\Sallal\17462 Sallal WSP\gis\PURVEYORS.mxd

Riverbend and North Bend to Sallal. Boundary lines have been established by the East King County Coordinated Water System Plan (EKCCWSP). Figure 1-2 shows the locations of the adjacent purveyors. The purveyor of water to the Shelter Holdings site is currently under litigation.

Wilderness Rim Association

Wilderness Rim Association is a homeowners' association and is the water purveyor for the Plat of Wilderness Rim, located in the southwest corner of Sallal's Service Area. Wilderness Rim purchases water from Sallal on a wholesale basis. Presently, it has 626 customers.

Sallal serves Wilderness Rim via two 6-inch meters (and one 1-1/2-inch meter in parallel with one of the 6-inch meters), one at the main road entrance to Wilderness Rim, the other on the west side of the plat near the Rattlesnake Tank. Check valves are installed immediately downstream of each meter to prevent water from flowing from Wilderness Rim to Sallal. Sallal and Wilderness Rim have an agreement that reserves a portion of the 198,000-gallon Rattlesnake Tank, located on the west boundary of Wilderness Rim, inside the Cedar River Watershed, for Wilderness Rim. Under this agreement, the tank provides 160,000 gallons of storage for Wilderness Rim (Refer to Appendix B, Agreements).

Riverbend Homesites Association

Riverbend is located within Sallal's Service Area, east of the Cedar Falls Road and south of the South Fork of the Snoqualmie River. Riverbend supplies its own water with two wells. It presently serves 546 connections.

City of North Bend

The City of North Bend lies immediately to the west of and partially within Sallal's service area. North Bend receives its water from the Mt. Si Springs located at the base of Mount Si, and the Centennial Well located at the North Bend Public Works facility.

North Bend was in a building moratorium for a period of time from 1999 to 2008 due to lack of water rights. In 2008, the City received a new water right for the use of the Centennial Well, located just west of the Sallal service area at the North Bend Public Works yard. The water right stipulated that during periods when minimum instream flows were not being met in the Snoqualmie River, and the Centennial Well was pumped, North Bend must provide mitigation water to the river. The first source of mitigation water is Hobo Springs which is essentially groundwater leakage through the Cedar Falls moraine from Masonry Pool, a part of the Chester Morse Reservoir. Hobo Springs are located southeast of Rattlesnake Lake. The springs are owned by Seattle Public Utilities (SPU). North Bend constructed a pipeline to transfer water from Hobo Springs to Boxley Creek, a tributary of the south fork of the Snoqualmie River. North Bend and SPU have a contract for the purchase of water from Hobo Springs.

The second source of mitigation water proposed by North Bend is the Sallal source wells. The Record of Examination (p. 16) for the water right states "*To the extent of any seasonal supply limitations in the Hobo Springs source, the Sallal wells will be used to make up the necessary mitigation quantity pursuant to a water sharing and pricing agreement between North Bend and the Sallal Water Association.*" A mutually acceptable agreement between Sallal and North Bend for this arrangement has not been established, but one is being worked on by the parties. Availability of the mitigation water from the Sallal wells is subject to establishing this agreement.

Sallal and North Bend are negotiating an agreement for the purchase and sale of water, in accordance with the Water Right Permit for the Centennial Well. Under the agreement North Bend will sell water to Sallal from its Centennial Well source to supply customer demand. Sallal will sell water to North Bend near its source wells to provide mitigation water as needed to the Boxley Creek mitigation system if Hobo Springs cannot supply the requisite mitigation.

TOPOGRAPHY

Figure 1-3 shows the general topography of the service area.

The service area is bounded on the north by the Mt. Si Recreation Area and extends east on SE Mt. Si Road to an elevation of approximately 930 feet. The south boundary is adjacent to the north end of Rattlesnake Lake and extends northwesterly along the base of the ridge that is the divide between South Fork Snoqualmie River and Cedar River to an elevation of approximately 1,080 feet. In between is the Snoqualmie River valley floor that is at an elevation of 480 feet at the west end where the service area borders the City of North Bend and rises gradually to an elevation of 840 feet at its eastern service boundary, east of Trucktown (exit 468th Avenue SE from I-90). The Sallal service area is approximately 14.4 square miles.

EXISTING AND FUTURE SERVICE AREA

The existing and anticipated future service areas of Sallal are the same. Within the geographic boundaries of the service area are four Group A systems to which Sallal does not provide water: Plat of Riverbend, Trucktown, Mt. Si Mobile Home Park, and Camp Waskowitz. This Shelter Holdings property is not a part of the Sallal service area per a ruling from the King County UTRC in 2019. Sallal wholesales water to Wilderness Rim plat and Nor West a small mobile home park. The system map, including key facilities shown in Figure 1-4.

ATTACHMENT A

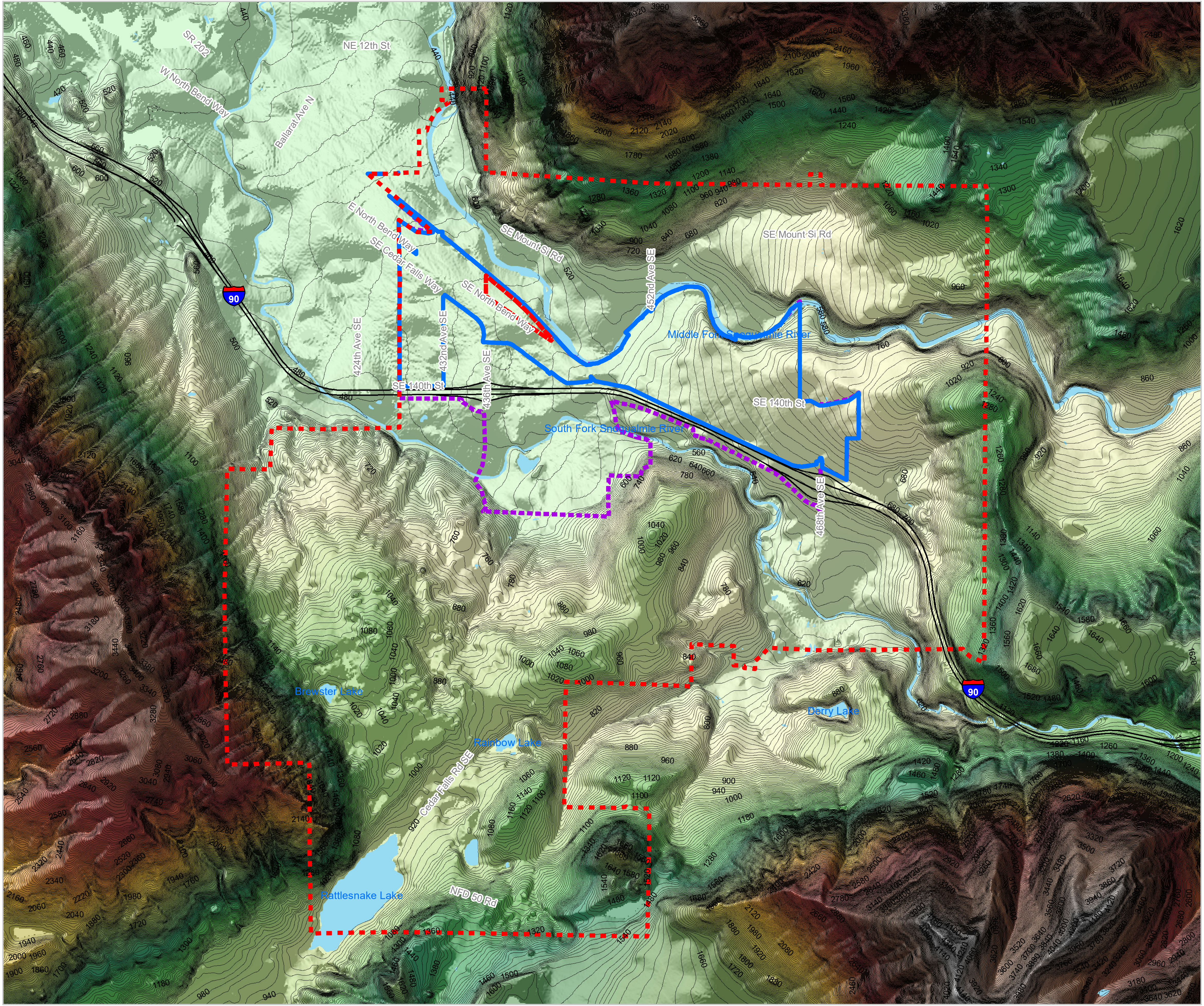

N

0 1,500 3,000 6,000 Feet

LEGEND:

🟥 Service Area

🟦 CITY OF NORTH BEND WITHIN SALLAL

🟪 CITY OF NORTH BEND UGA WITHIN SALLAL

10' CONTOURS - USGS

SALLAL WATER ASSOCIATION

WATER SYSTEM PLAN
FIGURE 1-3
TOPOGRAPHIC MAP

Gray & Osborne, Inc.
CONSULTING ENGINEERS

M:\Sallal\17462 Sallal WSP\gis\TOPO.mxd

ATTACHMENT A

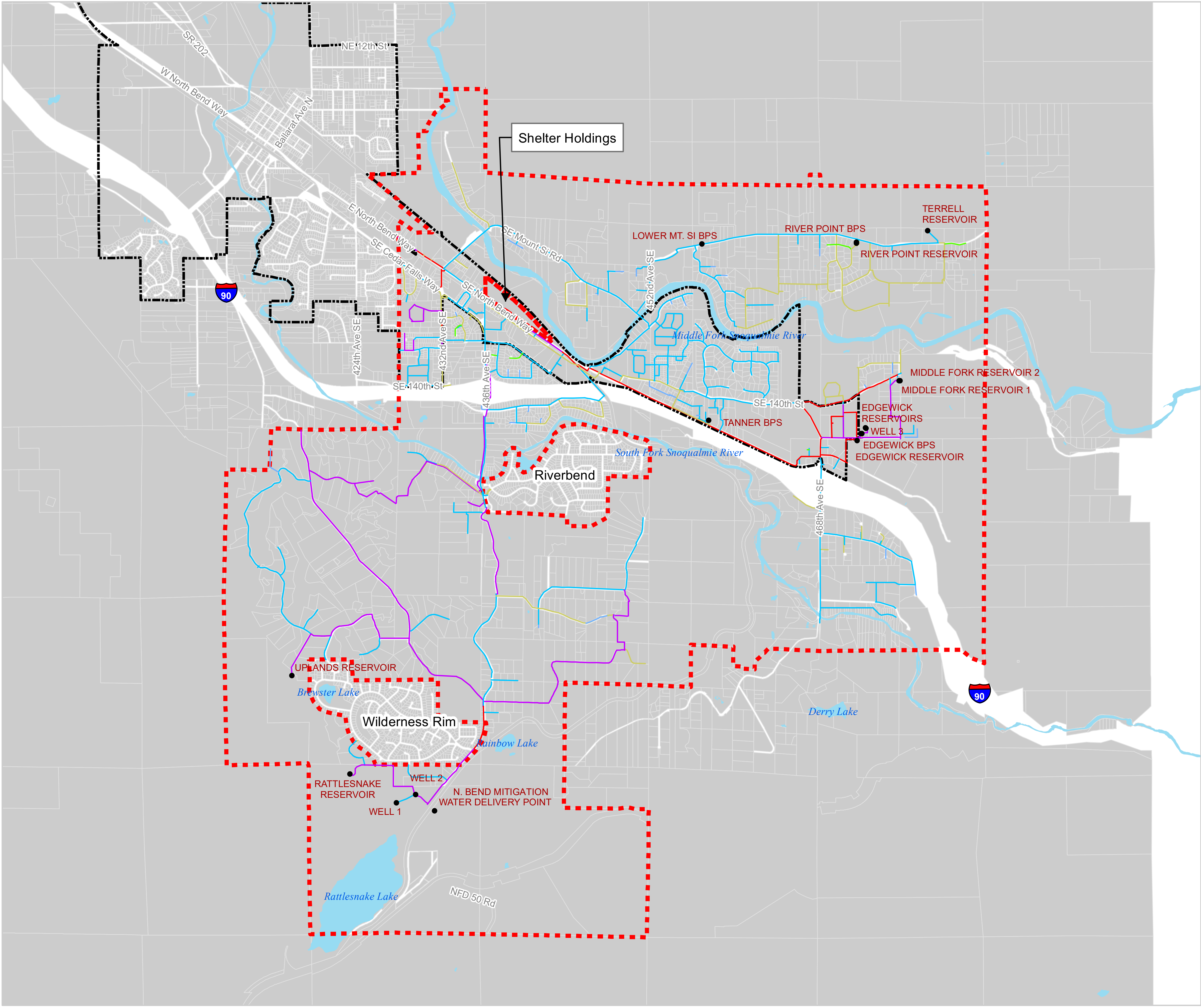

LEGEND:

Waterlines:

- Less Than 3"
- 4"
- 6"
- 8"
- 10"
- 12"
- Service Area
- City of North Bend
- ▨ Parcels

Note:
Sallal provides wholesale water to Wilderness Rim and Nor West. Sallal has an emergency intertie with Mt. Si Mobile Park, Riverbend, and Trucktown, Sallal has no connection to Shelter Holdings property.

N

0 1,500 3,000 6,000 Feet

SALLAL WATER ASSOCIATION

WATER SYSTEM PLAN
FIGURE 1-4
WATER BASE MAP

Gray & Osborne, Inc.
CONSULTING ENGINEERS

M:\Sallal\17462 Sallal WSP\gis\WATR_SYS.mxd

INVENTORY OF EXISTING FACILITIES

GENERAL DESCRIPTION OF EXISTING SYSTEM FACILITIES AND MAJOR COMPONENTS

Current Number of Services

At the end of 2018 Sallal served 1,664 connections. Of the total number of connections, 1,608 were single family residential, two were master meter connections serving the Wilderness Rim Plat, 40 were commercial connections, and 14 were irrigation connections. The Wilderness Rim Plat is a Group A system serving 623 homes, a park, a fire station and a community center.

WATER RIGHTS

Sallal has a right to withdraw 696 acre feet per year (226.8 million gallons per year), with a maximum withdrawal rate of 1,600 gpm for Wells 1 and 2. Sallal also has a water right of 102 AF with a maximum withdrawal rate of 91 gpm for Well 3 that is supplemental to the water rights for Wells 1 and 2. Supplemental water rights generally mean that the instantaneous use is additive but the annual right is not.

Sallal applied for additional water rights in 2001. That application is still pending. Although Sallal is negotiating for an additional source of supply with North Bend, the outcome of that negotiation is uncertain. Consequently, Sallal will continue to pursue the 2001 application, working with DOE accordingly, in an effort to ensure Sallal will be able to meet the projected demands in its service area.

Due to limited water rights to serve all projected growth, and to avoid becoming “over committed” with demand potentially exceeding its water right in the future, Sallal has adopted rules for processing new development applications and to process applications on the waiting list (Rules 40 and 41 in Appendix C).

Table 1-1 presents Sallal’s water rights.

TABLE 1-1

Water Rights

Water Right	Location/Source	Annual Volume (ac-ft/yr)	Instantaneous Amount (gpm)
G1-23752	Wells 1 and 2	696	1600
G1-24975	Wells 3 and 3A	102(1)	91

(1) Volume is supplemental to Wells 1 and 2 water right.

In addition to the above water rights Sallal has a water right application for 326 acre-feet of water with a priority date of June 14, 2001. No additional instantaneous water right is requested as a part of this application.

WELLS

Sallal owns and operates four wells that provide all the water used by its customers. Wells 1 and 2 are located within the City of Seattle Cedar River Watershed. These two wells supply approximately 90 percent of the total water system demand. The wells are located within CMU buildings, and discharge directly into the 1,215 ft. Pressure Zone.

Wells 3 and 3A are located along SE 144th Street, near the Edgewick Reservoir. Well 3 is housed in a CMU building. Well 3A is located adjacent to the building on the north side. The wells discharge to the Edgewick (793) Pressure Zone. Well 3A is currently inactive and is not connected to the system. Table 1-2 provides a summary of the wells.

Well 4 was drilled between Wells 1 and 2 in 2018. The well was tested at 1,200 gpm for 24 hours and appears to be capable of that rate. The pump house and infrastructure to bring this well online is planned for 2020. This well will provide redundant pumping capacity to the existing wells. No new water rights are being applied for to serve Well 4. It will operate under the existing water right for Wells 1 and 2.

TABLE 1-2

Well Information

Well Name	Ground Elevation (ft)	Boring Depth (ft)	Casing Diameter (in)	Well Screen Interval (ft)	Well Screen Diameter (in)	Capacity (gpm)
Well 1	967	340	12	123-185	8	800
Well 2	930	197	16	154-163	10	1,000
Well 3	750	255	8	238-248	8	91
Well 3A	750	345	10 and 8	233-248	8	Inactive
Well 4	950	175	16	135-153 & 163-168	14	1,200

RESERVOIRS

The storage for the water system is held within nine pre-cast, concrete reservoirs with a total volume of 1,506,000 gallons. Table 1-3 provides a summary of the water system reservoirs.

TABLE 1-3

Reservoir Information

Reservoir Name	Overflow Elevation (ft)	Base Elevation (ft)	Water Depth (ft)	Height (ft)	Diameter (ft)	Volume (gal)
Rattlesnake Reservoir 1	1,214.10	1,164.80	49.3	50	26	197,000
Rattlesnake Reservoir 2(1)	1,214.10	1,168.10	46	50	30	244,000
Uplands Reservoir	1,217.88	1,185.88	28.2(2)	35	30	149,000(2)
Edgewick Reservoir	793	738.33	54.7	55	26	217,000
Edgewick Reservoir 2	793	760	33.0	35	26	131,000
Edgewick Reservoir 3	793	760	33.0	35	26	131,000
Middle Fork Reservoir 1	883	848.09	34.9	35	30	184,000
Middle Fork Reservoir 2	883	848.13	34.9	35	30	184,000
River Point Reservoir	840	800.05	40.0	40	26	158,000
Terrell Reservoir	1,009	969.38	39.6	40	26	157,000
Total Volume	-	-		-	-	**1,752,000**

(1) Building permits and approvals for Rattlesnake Reservoir 2 have been applied for. It should be online in 2020.

(2) The overflow elevation in Uplands is 3.78 feet higher than at Rattlesnake. The volume shown is as measured from the base of Uplands to the overflow of Rattlesnake, an effective depth of 28.22 feet.

BOOSTER STATIONS

The distribution system includes four booster pump stations (BPS) which transfer water between pressure zones.

The Tanner BPS pumps from the 710 Zone to the 793 Zone filling the Edgewick Reservoirs. The station is located beside SE North Bend Way, in the parking area for the Tanner Electric Cooperative Utility. The BPS consists of two 10-hp pumps housed in a vault. This BPS is capable of providing approximately 470 gpm from the 710 Zone to the 793 Zone with both pumps running, although normal operation is at 280 gpm with one pump running.

The Edgewick BPS pumps from the Edgewick Reservoirs to the 920 closed zone, which then feeds the 883 Zone via PRVs filling the Middle Fork Reservoirs. The station is located on SE 144th Street at the site of the Well 3 pump house. The BPS consists of a 7-1/2-hp jockey pump, a 40-hp and three 50-hp high flow supply pumps. Flow requirements are met with any two of the three high flow pumps This BPS is capable of providing 3,500 gpm from the 793 Zone to the 920 Zone. There is standby generator power at the site with an automatic transfer switch that will allow full response to a power failure within 15 seconds.

The Lower Mt. Si BPS pumps from the 710 Zone to the 840 Zone filling the River Point Reservoir. The station is located at 457th Avenue SE and SE Mt. Si Road. The BPS consists of two 15-hp pumps capable of providing 250 gpm. There is no auxiliary power at the site, however, a plug-in connection and manual transfer are available to allow connection of Sallal's trailer mounted portable generator.

The River Point BPS is located at 471st Avenue SE and SE Mt. Si Road. The BPS consists of two 7.5-hp pumps. The BPS is capable of providing 200 gpm from the 840 Zone to the 1009 Zone and the Terrell reservoir. There is no standby power at this site, however, the station is equipped with a portable generator receptacle and manual transfer switch to allow connection of the Sallal's trailer mounted portable generator.

Table 1-4 provides a brief overview of the BPS.

TABLE 1-4

Booster Pump Stations

Name	Pumps to	Pumps and Size (HP)	Capacity (gpm)	Standby Power
Tanner(1)	793 Zone – Edgewick Res	2 – 10 hp	280/410(2)	No(3)
Edgewick	920 Zone – Closed	1 - 7-1/2 hp, 1 - 40 hp 3 - 50 hp	3,500(4)	Yes
Lower Mt. Si	840 Zone – River Point Res	2 - 15 hp	125/250(2)	No(3)
River Point	1009 Zone – Terrell Res.	2 - 7.5 hp	100/200(2)	No(3)

(1) Assumes a hydraulic grade line of 710 in the lower zone. The 710 Zone was historically operated at 710 and may be lowered back to that HGL due to high system pressures at the west end of the system.
(2) With one/two pumps running
(3) On-site standby power is not available; however, the station equipped with a portable generator receptacle and manual transfer switch allows connection of the Sallal's trailer mounted portable generator.
(4) With any one of the 50-hp pumps out of service.

PRESSURE ZONES AND REDUCING VALVES

The topography of the service area necessitates pressure reducing valves throughout the system. Currently the water system is separated into 16 pressure zones, ranging in hydraulic grade from 1,215 feet to 710 feet (Figure 1-5). The hydraulic grade in each pressure zone is maintained by either a reservoir, a PRV supplying water from a higher pressure zone, or a BPS. A 3D schematic of the water system showing hydraulic zones is presented in Figure 1-6.

ATTACHMENT A

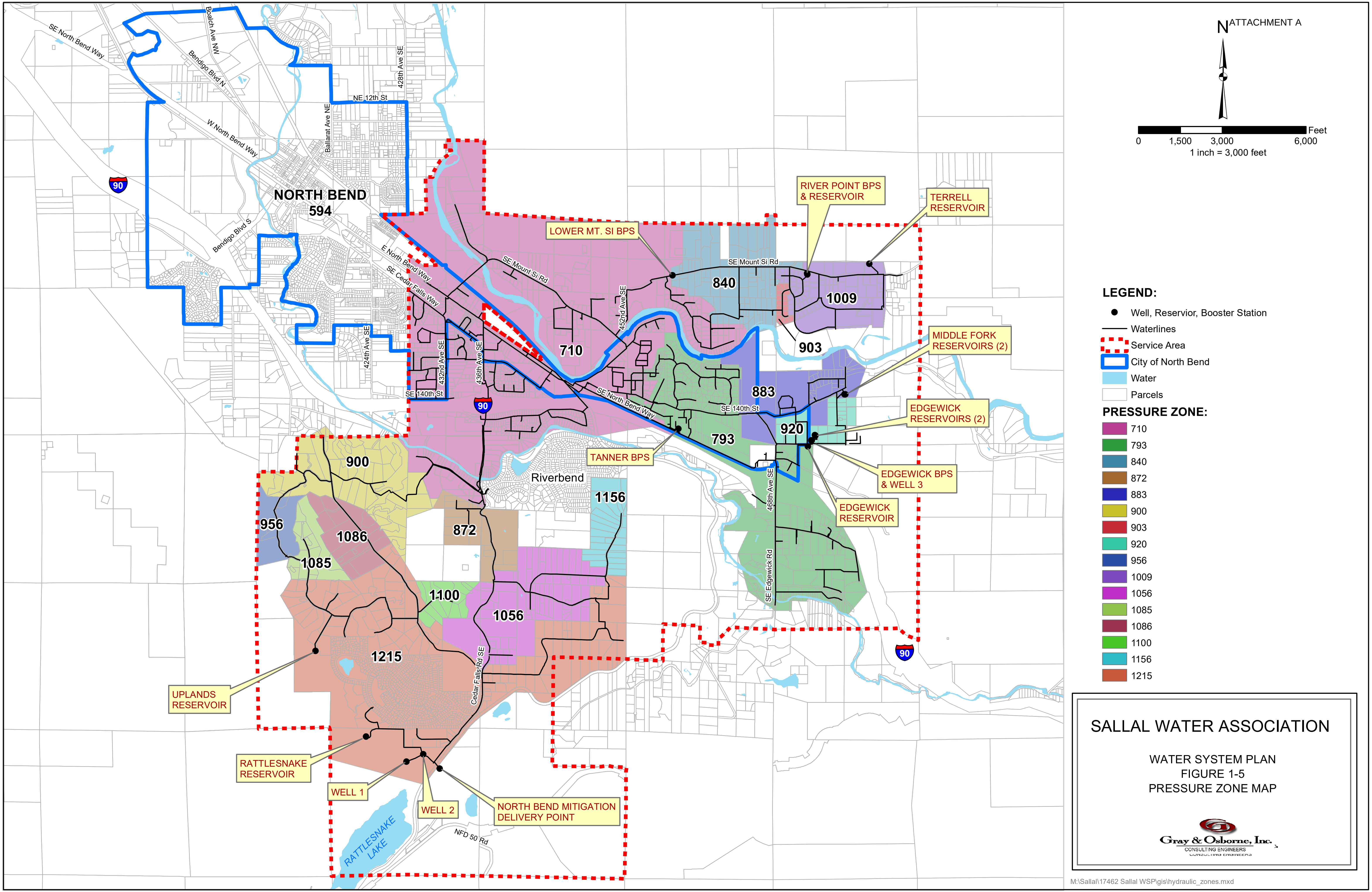

LEGEND:

- ● Well, Reservior, Booster Station
- — Waterlines
- ⬚ Service Area
- ▭ City of North Bend
- 🟦 Water
- ☐ Parcels

PRESSURE ZONE:

- 🟪 710
- 🟩 793
- 🟦 840
- 🟫 872
- 🟦 883
- 🟨 900
- 🟥 903
- 🟩 920
- 🟦 956
- 🟪 1009
- 🟪 1056
- 🟩 1085
- 🟥 1086
- 🟩 1100
- 🟦 1156
- 🟧 1215

SALLAL WATER ASSOCIATION

WATER SYSTEM PLAN
FIGURE 1-5
PRESSURE ZONE MAP

Gray & Osborne, Inc.
CONSULTING ENGINEERS

M:\Sallal\17462 Sallal WSP\gis\hydraulic_zones.mxd

ATTACHMENT A

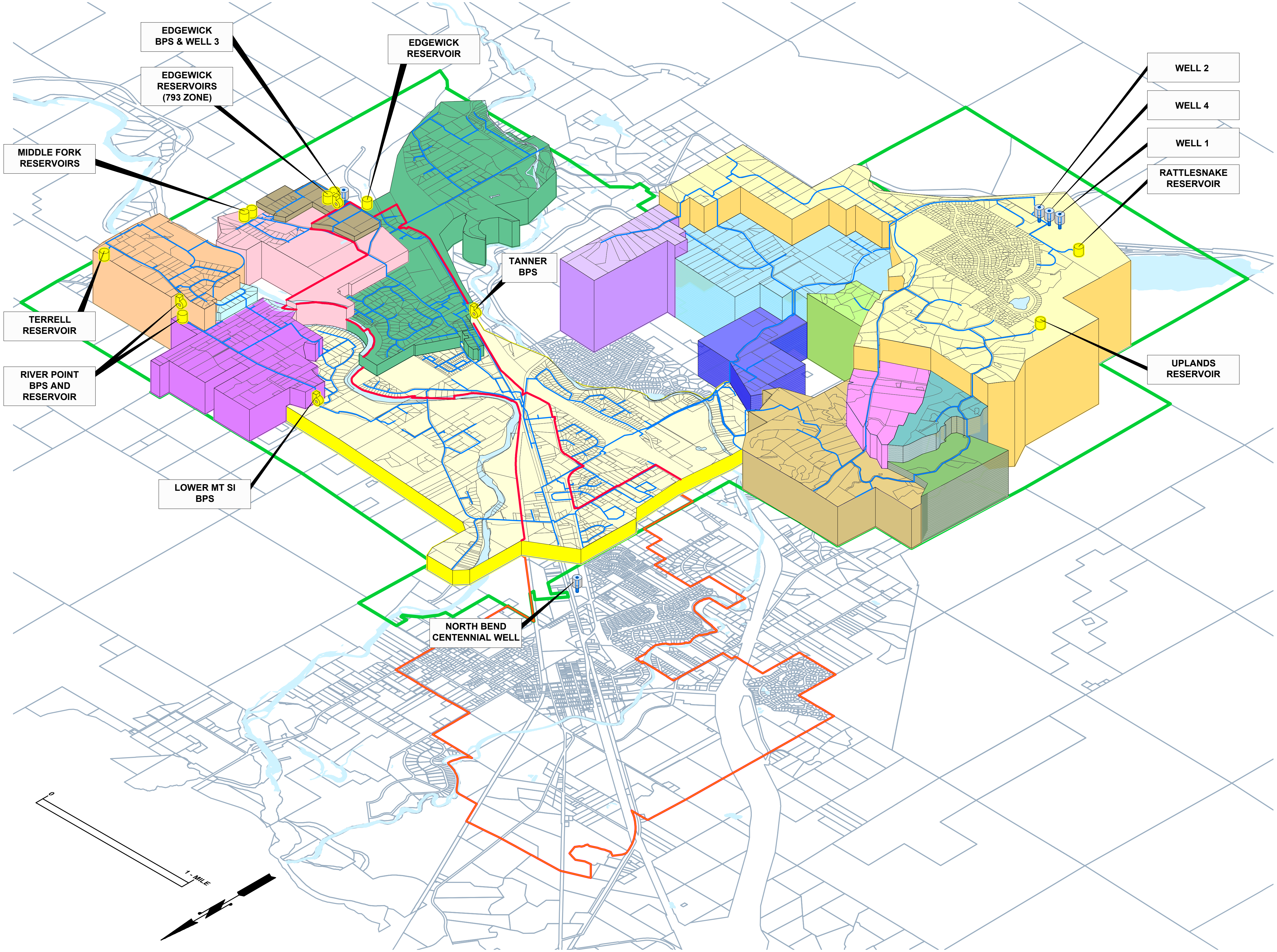

LEGEND

- — WATER LINES
- — SERVICE AREA
- — CITY OF NORTH BEND
- ■ WATER
- ▨ PARCELS
- ▨ PARCELS
- ● BOOSTER PUMP STATION
- ● RESERVOIR
- ● WELL
- PRV'S NOT SHOWN FOR CLARITY

HYDRAULIC ZONES

- ☐ 594 (North Bend)
- ■ 710
- ■ 793
- ■ 840
- ■ 872
- ■ 883
- ■ 900
- ■ 903
- ■ 920
- ■ 956
- ■ 1009
- ■ 1054
- ■ 1085
- ■ 1086
- ■ 1100
- ■ 1156
- ■ 1215

SALLAL WATER ASSOCIATION

WATER SYSTEM PLAN

FIGURE 1-6
3D WATER PRESSURE ZONE SCHEMATIC

Gray & Osborne, Inc.
CONSULTING ENGINEERS

0 1"
ONE INCH AT FULL SCALE.
IF NOT, SCALE ACCORDINGLY

M:\Sallal\17462 Sallal WSP\3D Water Pressure Zone Schematic\3D Pressure Zone Schematic-3.DWG, 2/22/2019 6:51 AM, PHILIP MARSHALL

Twenty-six pressure-reducing valve (PRV) stations are located throughout the water system. Most of the PRVs in the system are Cla-Val PRVs, the remaining are roll-seal type valves. The roll-seal valves are being replaced over time as part of a replacement schedule.

Table 1-5 presents the inventory of PRVs in the system.

TABLE 1-5

Pressure Reducing Valves

Location	Name	Valve Size (in)		Reducing Valve Type		Pres Relief Valve (in)	Grd. Elev.	Connecting HGL Zones		Pressure (psi)		Actual HGL (ft)		PSI Difference from Expected		HGL Difference from Expected	
		Big	**Small**	**Big**	**Small**			**Up**	**Down**	**Up**	**Down**	**Up**	**Down**	**Up**	**Down**	**Up**	**Down**
SE 171st Street and Cedar Falls Road	Landfill PRV	6	4	Cla-Val	Cla-Val		935	1215	1056	123	50	1,219	1,051	-2	2	-4	5
SE 160th Street and Cedar Falls Road	Cedar Falls Road	6	2	Cla-Val	Cla-Val	4	770	1056	872	132	42	1,075	867	-8	2	-19	5
Riverbend and Cedar Falls Road	Riverbend	8	3	Cla-Val	Cla-Val	4	565	872	710	130	63	865	711	3	0	7	-1
45001 SE 159th Street	Sallal View Estates	8	4	Cla-Val	Cla-Val		936	1156	1056	90	50	1,144	1,052	5	2	12	4
45001 SE 159th Street	Sallal View Estates	2		Cla-Val			936	1156	1056								
44809 SE 161st Place	Weeks Road	4					938	1215	1056								
Uplands Way and SE 163rd Street	SE 163rd	4	2	Cla-Val			988	1215	110	90	50	1,196	1,104				
15933 Reserve Drive SE	Upper	6	2	Cla-Val			984	1215	1085	104	52	1,224	1,104				
15655 Reserve Drive SE	Middle	8	2	Cla-Val		3	890	1085	956	90	50	1,098	1,006				
15102 Reserve Drive SE	Lower	8	2	Cla-Val		3	743	956	900	106	62	988	886				
14955 430th Avenue SE	Chapman	12	3	Cla-Val	Roll Seal	3	575	900	710	138	59	894	711	3	-1	6	-1
15716 Uplands Way SE	Uplands 1	12	3	Cla-Val	Roll Seal	3	988	1215	1086	98	34	1,214	1,067				
15131 Uplands Way SE	Uplands 2	12	3	Cla-Val	Roll Seal		787	1086	900	124	42	1,073	884				
45710 North Bend Way	Tanner	8		Cla-Val			615	793	710	79	42	797	712	-2	-1	-4	-2
45509 SE 140th Street	Weber/ Tannerwod	4		Roll Seal			610	793	710	80	43	795	709	-1	0	-2	1

TABLE 1-5 – (continued)

Pressure Reducing Valves

Location	Name	Valve Size (in)		Reducing Valve Type		Pres Relief Valve (in)	Grd. Elev.	Connecting HGL Zones		Pressure (psi)		Actual HGL (ft)		PSI Difference from Expected		HGL Difference from Expected	
		Big	Small	Big	Small			Up	Down	Up	Down	Up	Down	Up	Down	Up	Down
46333 SE 140th Street	Wood River	6		Roll Seal			705	883	793	74	43	876	804	3	-5	7	-11
SE 144th Street and 468th Avenue SE	New Above Ground	8		Cla-Val			705	883	793	96	74	927	876				
SE 144th Street and 468th Avenue SE	Trucktown	8		Roll Seal			705	920	883	74	40	876	797				
In Upper Parking Lot	Genie	Closed		Cla-Val	Cla-Val		748	920	883	Closed							
13905 476th Avenue SE	Middle Fork	8	1	Cla-Val	Cla-Val		850	920	883	54	24	975	905				
45716 SE Mt. Si Road	Lower Mt. Si BPS	8		Roll Seal			605	840	710	90	40	813	697				
13028 461st Avenue SE	Middle Fork Park	4		Roll Seal			600	840	710	102	47	836	709				
47121 SE Mt. Si Road	River Point BPS	No Valves					800	1009	840	98	15	1,026	835				
12815 469th Place SE	River Point BPS	4		Roll Seal			757	903	840	68	28	914	822				
12702 470th Avenue SE	River Point	6	1	Cla-Val	Cla-Val	4	763	1009	903	150	66	1,110	915				
SE 161st SE and 447th Avenue SE	Weeks	4		Cla-Val			958	1215	1056	123	52	1,242	1,078	-12	-10	-27	-22

Distribution Piping

The distribution pipe used throughout the service area is a combination of asbestos cement (AC), ductile iron (DI) and polyvinyl chloride (PVC). Sallal has adopted a new policy of using DI pipe for all new line extensions and replacements. Table 1-6 provides an overview of the pipe sizes within the distribution system.

TABLE 1-6

Distribution Pipe Inventory

Pipe Size	Length (ft)	Percentage
4" or less	10,987	3.7%
6"	58,203	19.4%
8"	145,277	48.5%
10"	23,069	7.7%
12"	62,082	20.7%

Interties

There are two emergency interties with neighboring purveyors, Riverbend on Cedar Falls Road and North Bend on Cedar Falls Way. These interties are for emergency use only. Pumping is required to deliver water from Riverbend and North Bend to Sallal. Neither intertie is equipped with pumping facilities, though the North Bend intertie has pumping ports.

Sallal is currently negotiating with North Bend for an intertie to supply water to Sallal from North Bend's Centennial Well. The capital infrastructure to provide water from North Bend to Sallal is not yet constructed. This infrastructure will require a booster station. The project is discussed in Chapter 3 of this Plan as a part of the Capital Improvement Plan.

EXISTING SYSTEM OPERATION

Wells 1 and 2 are located within the City of Seattle Cedar River Watershed in the southwest portion of Sallal's service area. Wells 1 and 2, are actuated by water level in the Uplands Reservoir. These wells supply approximately 90 percent of the system demand. Water from the wells is pumped to the 1215 Zone, which is served by the Rattlesnake and Uplands Reservoirs. A second reservoir at the Rattlesnake reservoir site is scheduled to be online in 2020.

Water from the 1215 Zone is conveyed northerly to the 710 Zone via two main routes. One route is down Cedar Falls Road SE, passing through three PRV controlled pressure zones to the 710 Zone. The second route diverges from Cedar Falls Road SE at SE 171st Street to the northwest to the Uplands Reservoir. From there the water travels north through the Uplands development, passing through three different PRV controlled pressure zones before entering the 710 Zone (see Figure 1-6).

The largest zone demand is the 710 Zone which includes a portion of the City of North Bend. Water not used in this zone flows generally to the north and east, where it supplies the Lower Mt. Si BPS and the Tanner BPS. Both of these BPS facilities have PRVs, which allow water to flow back from the higher zones to the 710 Zone in times of abnormally high demand, such as a fire event or main break.

At the Lower Mt. Si BPS, the booster pump is controlled by the level controls in the River Point Reservoir in the 840 Zone. The 840 Zone supplies water to the River Point BPS, which pumps water into the 1009 Zone and the Terrell Reservoir. Level controls in the Terrell reservoir call the River Point BPS.

The Tanner BPS pumps water to the 793 Zone, and is controlled by the level in the Edgewick Reservoirs. The PRV at this station permits water to flow to the 710 Zone if pressure falls below a preset level, approximately 30 psi for example in a fire flow event. If the pressure on the downstream side of the PRV (710 Zone) at the booster station stays below 30 psi for one minute an interlock will prevent the booster pumps from starting. When the pressure returns to normal conditions normal pump operation may resume. The hydraulic grade line of the 793 Zone is maintained by the Edgewick reservoirs.

The 920 Zone, a closed zone, is supplied water by the Edgewick BPS, capable of providing 3,500 gpm. The pumps are called on based upon the BPS discharge pressure, and shut off by declining BPS discharge flow. The jockey pump runs continuously. Excess water, pumped but not utilized is recirculated back to the intake side of the pumps. The 920 Zone has very small daily demands, but serves the Genie Lift industrial facility requiring a fire flow of 3,000 gpm. The 920 Zone feeds the Middle Fork reservoirs in the 883 Zone through PRVs.

The Middle Fork (883) Zone hydraulic grade is maintained by the Middle Fork reservoirs and the PRV on SE 140th Street and SE 468th Avenue. The two Middle Fork Reservoirs provide storage for this zone and indirectly for the 793 and 920 zones. If a high flow, such as a fire flow occurs in the 883 Zone, the Middle Fork reservoirs and the PRVs supplying the zone will supply water.

Under normal operation the Edgewick Booster Station will fill the 883 zone and supply water to the closed 920 Zone. The Tanner BPS will supply water to the 793 Zone. If the 793 Zone tanks drop below normal levels, the PRVs between the 793 and the 883 Zone will open to maintain the water level in the 793 Zone. The drop in water level in the 883 reservoirs, the Middle Fork Reservoirs, will call the Edgewick booster station on, which draws from the 793 Zone.

In unusual conditions the entire Sallal system may be operated in a “manual mode”. In this mode the pumping of water from the 710 Zone by the Mt. Si and Tanner booster stations is curtailed. The easterly zones rely upon their own storage and thus demand on the Rattlesnake/Uplands system is reduced. For example, in the summer of 2016 when Wells 1 and 2 started discharging water with entrained air, the system was manually operated during peak periods. The pumping rate and volume at the Tanner Booster Station was decreased to reduce the demand on the Rattlesnake/Uplands reservoirs.

In an emergency, PRVs may be adjusted to limit flow to the 710 Zone from the south by closing the small PRVs at the Riverbend and Chapman PRVs. This forces water to flow back from the higher easterly zones to the 710 Zone to further reduce demand on the Rattlesnake/Uplands reservoirs. Typically, these PRVs are only activated in the event of a high flow event that reduces low pressure side of the PRV. The large PRVs at Riverbend and Chapman would remain open in case of pressure drop in the 710 Zone, downstream of the PRVs, in excess of 5 psi. As discussed later there is excess storage capacity in the 993/883 Zone.

PROJECTS COMPLETED SINCE THE 2010 WATER SYTEM PLAN

The 2010 Water System Plan identified several Capital Improvement Projects. The status of those projects is given below.

TABLE 1-7

Projects Since 2010 Water System Plan

Project No.	Project Title	Project Description	Status
S-1	Upgrade Rattlesnake/Uplands Telemetry and Hydraulic Controls	Relocate well controls to Uplands Reservoir and install altitude valve at Rattlesnake Reservoir.	Completed 2010
S-2	Additional Well at Rattlesnake	Well provides redundancy to the system and allows Sallal to pump at its full instantaneous water right.	Well drilled and tested. Well equipping in 2020.
ST-1	Tanner Reservoir and Booster Station	1.5 MG reservoir to provide storage and allow Sallal to receive water from North Bend.	Project replaced with 0.24 MG Mt Baker silo reservoir at Rattlesnake site (2019).
BS-1	River Point BPS	Modify to include 2nd pump and provide manual transfer switch.	Completed 2017
BS-2	Mt. Si BPS	Install a 2nd pump for redundancy.	Completed 2018
D-1	PRV Vault Improvements	Upgrade vaults throughout the system for access to replace older roll seal valves with new Cla-Val.	Ongoing – PRV Riverbend station replaced on Cedar Falls Road (2016), three upgraded.
D-2	Water Main Replacement	Replace older PVC and AC water Main.	3,000 feet of water main was replaced on Cedar Falls Road, 2016.

TABLE 1-7 – (continued)

Projects Since 2010 Water System Plan

Project No.	Project Title	Project Description	Status
D-3	Edgewick Road	Replace 2,400 feet of 8-inch AC water main for fire flow.	Not completed, in current CIP.
D-4	Cascade East Water Main	Loop two long dead-end water mains in the southeast portion of the system.	Not completed, in current CIP.
D-5	432nd Avenue SE Water Main	Extend an 8-inch water main along north side of I-90 from 432nd to 436th.	Revised, new piping installed as part of new development.
D-6	Terrell Fire Flow Improvements	Replace approximately 1,350 feet of 6-inch water main with 8-inch water main for fire flow.	Not completed, in current CIP.
D-7	Terrell Water Main Extension	Extend a water main 800 feet to the west from 1009 Zone to increase pressure to services.	Not completed, in current CIP.

RELATED PLANNING DOCUMENTS

The following related planning documents were reviewed and any impact they have on Sallal was noted.

SALLAL WATER ASSOCIATION WATER SYSTEM PLAN (2010)

The Water System Plan identified capital projects to improve the system, previously presented. The Plan also identified planned growth and a financing plan. The Plan also identified that Sallal would not be able to serve all planned growth due to water rights limitations.

CITY OF NORTH BEND WATER SYSTEM PLAN (2010)

The City limits of North Bend abuts Sallal's service area to the west between 424th Avenue SE and 432nd Avenue SE. The North Bend WSP discusses Sallal and North Bend selling each other water to serve the easterly portion of the City, east of 432nd Avenue SE. The North Bend plan assumed that North Bend would sell to Sallal the average day water demand for the area of North Bend within Sallal's service area. In addition, the Plan discusses Sallal selling mitigation water to North Bend as needed, up to the amount specified in the Record of Examination for the Centennial Well, if supply from Hobo Springs is inadequate to supply mitigation water.

Contract negotiations are currently ongoing regarding the exchange of water between Sallal and North Bend.

CITY OF NORTH BEND COMPREHENSIVE PLAN

The City of North Bend adopted a Comprehensive Plan in 2015. The Plan presents estimated future population and future land use designed to accommodate the projected population.

CITY OF NORTH BEND, ECONOMIC PROFILE (2018)

Discusses projected growth in the City, local employment and land use.

KING COUNTY COMPREHENSIVE PLAN

A portion of Sallal's service area is located in an unincorporated portion of the County, zoning of lands within the service area is regulated by King County. King County adopted a 2016 Comprehensive Plan to guide zoning within the unincorporated portions of the County.

EAST KING COUNTY COORDINATED WATER SYSTEM PLAN

The 1996 East King County Coordinated Water System Plan (EKCCWSP) updated earlier versions. The update included:

- A water demand forecast through 2050 and in general terms developed strategies to meet the projected demand. Of particular interest to this WSP is the identification of the Snoqualmie valley aquifer as a potential source.
- A boundary delineation between purveyors.
- The importance of conservation and identified several measures to reduce consumption on a per capita basis.
- Developed to minimum design standards.

The plan recommends Seattle Public Utilities (SPU) fully develop the Cedar River Watershed as a major component of the Puget Sound Regional Supply System.

WATER SYSTEM PLANS/SMALL WATER SYSTEM MANAGEMENT PLANS FOR RIVERBEND AND WILDERNESS RIM

Riverbend Homesites Association and the Wilderness Rim Maintenance Corp. water systems are both islands within Sallal's service area and are operated independently. Both are under 1,000 connections and non-expanding. Riverbend system has their own water sources while Wilderness Rim purchases water wholesale from Sallal. Riverbend does not have a WSP or a SWSMP. While it is understood that Wilderness Rim has a SWSMP, it has not been made available for review during the preparation of this WSP.

EXISTING ZONING AND LAND USE

Figure 1-7 shows the land use zoning within the Sallal service area. The majority of the land is zoned for residential use with various other commercial and industrial uses.

SERVICE AREA POLICIES AND CONDITIONS OF SERVICE

Service area policies are important in guiding the development of a water system. The DOH has established a list of service area policies to be referenced in water system comprehensive plans. Table 1-8 lists the type of service area policy, Sallal's current policies, and the reference source.

TABLE 1-8

Service Area Policies

Policy Name	Sallal Policy	Reference
Wholesaling/Wheeling of Water	Sallal currently provides water to two wholesale customers – Wilderness Rim, and, on an emergency basis, Riverbend. Sallal would consider additional wholesale/wheeling customers on a case-by-case basis.	2010 Water System Plan
Annexations	Sallal is not actively pursuing any annexations. The Sallal would address annexation issues in a case-by-case basis.	2010 Water System Plan
Direct Connection and Satellite/Remote Systems	Sallal intends to provide retail service within its service area. To avoid the creation of private water systems within the Sallal's service area potential customers, within Sallal's boundary, are required to request service from Sallal. Prior to connection to Sallal's system, all fees shall be paid, main extensions completed and any special conditions addressed and resolved.	2010 Water System Plan
Design Performance Standards	Sallal has design standards that can be found in Appendix D. All new facilities must meet the requirements set forth in these standards.	2017 Water System Design and Construction Standards

TABLE 1-8 – (continued)

Service Area Policies

Policy Name	Sallal Policy	Reference
Latecomer Agreements	Sallal will consider Latecomer Agreements on a case-by-case basis.	2010 Water System Plan
Oversizing	If beneficial to Sallal for future expansion, Sallal will pay the extra cost to oversize water mains within the system.	2010 Water System Plan
Cross-Connection Control Program	Sallal adopted its Cross-Connection Control program in 1998. A copy can be found in Appendix E.	2010 Water System Plan

Water facility extensions are individually acted on by the Board. The process is initiated by a property owner's request within its service area for a facility extension. Sallal does not solicit business, nor does it promote expansion of the system. Sallal is required to investigate all water requests as per RCW 43.20.260 existing agreements with the Federal Government through the Rural Development Administration. All costs involved in facility extensions are borne by the requesting party. In cases where improvements to existing facilities are necessary to serve the requesting party, the requesting party must pay the cost of the improvement. Agreements are signed and conditions are listed before any facility extension is undertaken.

Sallal is within the East King County Coordinated Water System Plan area. RCW 70.116.060(3)(b) states "An existing purveyor is unable to provide the service in a timely manner if the water cannot be provided to an applicant for water within one hundred twenty days unless specified otherwise by the local legislative authority."

> Timely - Sallal will issue, or deny, a Certificate of Water Availability to applicants that have submitted, in writing, credible and complete applications for Certificates within 120 days of receipt.
>
> Reasonable – Sallal shall consider the extension of service reasonable if:
>
> - Service is consistent with Association Rules, as amended in 2019, and applicable Association resolutions, policies and procedures.

The developer is responsible for all costs to extend Sallal's system to serve the proposed development with reliable service meeting all Sallal and WDOH criteria and including the provision of fire flow as may be required by Eastside Fire and Rescue, the City of North Bend or King County.

ATTACHMENT A

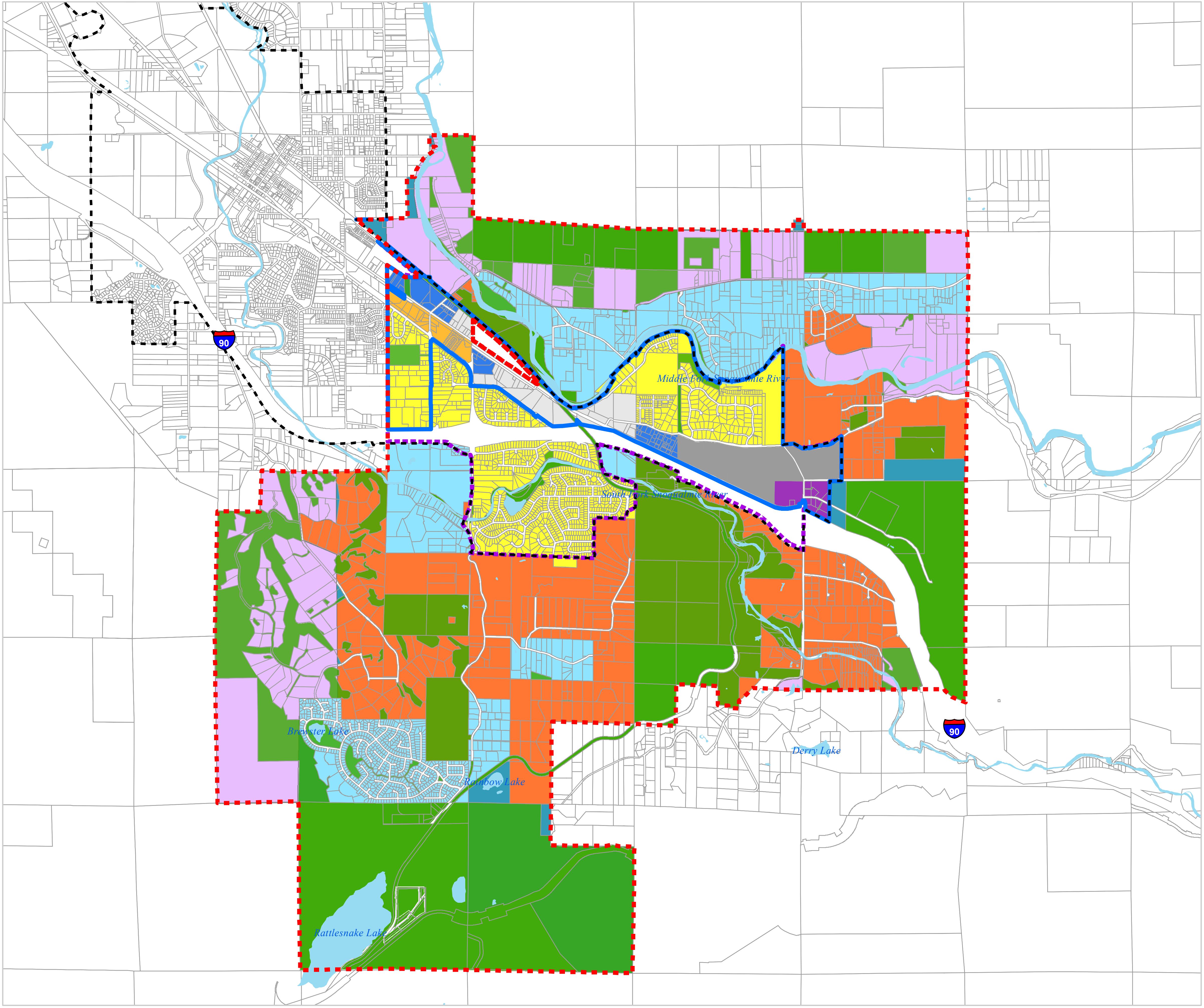

LEGEND:

- Service Area
- CITY OF NORTH BEND UGA
- CITY OF NORTH BEND WITHIN SALLAL
- CITY OF NORTH BEND UGA WITHIN SALLAL
- PARCELS
- TRACTS & PARKS

NORTH BEND ZONING

Residential

🟨	LDR	*Low Density Residential*
🟧	CR	*Cottage Residential*

Commercial

🟪	IC	*Interchange Commercial*
🟦	NB	*Neighborhood Business*

Employment Park

⬜	EP-1	*Employment Park - 1*
⬛	EP-2	*Employment Park - 2*

Other

🟩	POSPF/F	*Parks / Open Space / Public Facilities / Forest*

KING COUNTY ZONING:

🟪	RURAL AREA: RA-10	
🟦	RA-2.5	*Rural Area, one DU per 5 ac.*
🟧	RA-5	*Rural Area, one DU per 5 ac.*
🟦	RA-10	*Rural Area, one DU per 10 ac.*

N

0 1,500 3,000 6,000 Feet

SALLAL WATER ASSOCIATION

WATER SYSTEM PLAN
FIGURE 1-7
ZONING

Gray & Osborne, Inc.
CONSULTING ENGINEERS

M:\Sallal\17462 Sallal WSP\gis\LANDUSE.mxd

Written confirmation of the receipt of a credible and complete request for a Certificate of Water Availability will be issued within 14 days; or if a submission is not credible or complete, Sallal will identify the shortcomings in writing within 14 days. Fire Flow analysis and or peak hour pressure analysis, if required, will be performed within 60 days of receipt of a credible and complete request. Included in the fire flow analysis will be identification of needed modifications to the system, if any. Written response to a credible and complete request for a Certificate of Water Availability will be made in accordance with the time frame set forth defined above. If a parcel(s) cannot be served by Sallal the owner may seek to be excluded from the Sallal service area by request to the King County Utility Technical Review Committee.

Individuals

In cases where the requesting party's property does not abut an existing water main, the requesting party is required to contact property owners to obtain easements that include Sallal in the easement.

Developers

For new developments, developers are required to install all main lines, water service lines, hydrants, and any items needed to serve the area in which they wish to have service. They are also required to pay the required connection fees for the property being developed. In some cases, they are required to either deed land to Sallal or provide a utility easement for future storage or possible well sites.

In cases where the new development is adjacent to other land that could be served by Sallal in the future, main sizes may be oversized in order to facilitate the future demands of these parcels.

New Service Requests

New residential services receive the standard 3/4" x 5/8" meter. If the Fire Marshal requires the home to be equipped with fire suppression sprinklers, the meter is generally increased in size but an additional General Facility Charge is not typically charged. Except for this upsizing, the General Facility Charge applied to a new development is dependent upon the meter size (see Chapter 10).

CHAPTER 2

BASIC PLANNING DATA AND WATER DEMAND FORECASTING

OBJECTIVE

Basic planning data is an essential component of a Water System Plan. The objective of this chapter is to present basic planning data and water demand forecasts needed to assess the current and future capabilities of the water system. This chapter will provide existing and future population and service connection projections, water use data, and develop the water demand associated with the planning element known as an equivalent residential unit (ERU).

The water use data and water demand forecasts found in this chapter comprise two of the three elements required for the development of a conservation program. The third required element is the implementation of a conservation program, which is discussed in Chapter 5.

CURRENT POPULATION AND NUMBER OF SERVICE CONNECTIONS

RESIDENTIAL POPULATION

The service area is within the City of North Bend, the North Bend UGA, and unincorporated King County. Zoning is controlled by the City and the County in compliance with the Growth Management Act (GMA). The total number of equivalent residential units possible in Sallal's service area per current zoning including Wilderness Rim is estimated to be about 3,818. The water demand anticipated from 3,818 ERU exceeds Sallal's existing water right. Sallal has a water right application pending and is negotiating with North Bend for a water supply contract. Some lots within the service area may not be buildable due to steep slopes or wetlands. Each lot is, however, considered to be a possible service.

Sallal's population was calculated based on Puget Sound Regional Council (PSRC) data. Sallal wholesales water to Wilderness Rim, which currently serves 623 homes, a fire station, the homeowners association office, and a park. Table 2-1 provides an overview of the total number of services and population served in the combined Sallal and Wilderness Rim's service areas by year from 2010 through 2018. Based upon their water use, the three commercial connections in Wilderness Rim can be assumed as residential connections for simplicity.

TABLE 2-1

Sallal Service Area Population

Year	Sallal Service Connections	Wilderness Rim Service Connections	Population(1)	
			Sallal Only	Total Served
2010	1,490	625	4,165	5,688
2011	1,498	625	4,213	5,736
2012	1,519	625	4,280	5,803
2013	1,563	625	4,389	5,912
2014	1,575	625	4,521	6,094
2015	1,587	625	4,620	6,143
2016	1,601	626	4,716	6,241
2017	1,645	626	4,743	6,268
2018	1,664	626	4,830	6,356

(1) 2.9 to 3.0 people/ERU assumed for Sallal retail customers (PSRC).

TOTAL SERVICE CONNECTIONS

Table 2-2 provides the number of service connections within the water system by customer class.

TABLE 2-2

Sallal Service Connections

Year	Residential	Commercial	Irrigation	Wholesale(1)	Total
2010	1,441	38	11	2	1,490
2011	1,448	39	11	2	1,498
2012	1,468	40	11	2	1,519
2013	1,510	42	11	2	1,563
2014	1,522	42	11	2	1,575
2015	1,534	42	11	2	1,587
2016	1,547	42	12	2	1,601
2017	1,591	42	12	2	1,645
2018	1,608	42	14	2	1,664

(1) Wilderness Rim.

CURRENT WATER USE

PRODUCTION HISTORY

Table 2-3 provides a record of total water production for the period 2010 through 2018.

TABLE 2-3

Annual Water Production

Year	Total Production (gallons)	Average Daily Production (gallons)	Annual Production (ac-ft/yr)
2010	164,823,438	451,571	506
2011	143,179,266	392,272	439
2012	156,065,689	428,752	479
2013	166,326,611	455,689	510
2014	158,981,685	435,566	488
2015	172,445,648	472,454	529
2016	160,957,595	442,191	494
2017	173,300,800	474,797	532
2018	179,691,400	492,305	551

Table 2-4 provides a breakdown of the water produced in the system by each of the three wells for 2010 through 2018.

TABLE 2-4

Annual Water Production by Well (gal)

Year	Well 1	Well 2	Well 3	Total
2010	92,346,016	52,662,005	19,815,417	164,823,438
2011	62,625,978	68,500,995	12,052,293	143,179,266
2012	69,832,000	74,736,989	11,496,700	156,065,689
2013	81,220,002	79,019,012	6,087,598	166,326,611
2014	78,800,985	72,313,005	7,867,696	158,981,685
2015	80,737,534	85,647,010	6,061,104	172,445,648
2016	121,913,999	31,961,000	7,082,595	160,957,595
2017	86,054,000	80,756,000	6,490,800	173,300,800
2018	85,464,000	84,299,000	9,928,400	179,691,400

AVERAGE DAY DEMAND

Average day residential demand (ADD) as defined by DOH means “the total quantity of water used from all sources of supply as measured or estimated over a calendar year divided by 365” (WAC 246-290-010 – Definitions). The value to be used for projecting future system demands should be estimated using several years of data to minimize either an under estimate or an over estimate of projected demands. Using a single year of data could produce widely varying projections depending upon the individual year selected as the base. Therefore, the use of longer-term averages is considered to provide a more reasonable approach. Table 2-5 provides the Sallal’s average day production and average day production on a per capita basis excluding Wilderness Rim.

TABLE 2-5

Average Day Production and Water Production per Capita

Year	Estimated Service Area Population	Average Day Production (gpd)	Estimated per Capita Production (gpcd)
2010	4,165	339,901	82
2011	4,213	296,814	70
2012	4,280	322,292	75
2013	4,389	343,199	78
2014	4,571	335,283	73
2015	4,620	372,618	81
2016	4,716	350,692	74
2017	4,743	400,740	84
2018	4,830	412,455	85
Average 2012-2018			**79**

CONSUMPTION HISTORY

Table 2-6 provides the consumption by class of service within the water system for the period of 2010 through 2018.

TABLE 2-6

Total Water Consumption by Service Class (gal/yr)

Year	Sallal Residential	Wilderness Rim	Commercial(1)	Irrigation	Total
2008	106,377,568	29,593,124	6,674,404	5,210,568	147,855,664
2009	115,169,560	39,149,572	6,850,184	6,035,612	167,204,928
2010	98,878,771	40,759,492	7,328,710	4,657,990	151,624,963
2011	84,736,626	34,842,139	7,066,670	3,766,419	130,411,855
2012	102,932,347	38,106,636	7,357,455	4,351,288	152,747,726
2013	104,800,373	41,059,066	7,434,836	4,298,756	157,593,031
2014	106,893,583	36,603,530	6,818,925	1,563,642	151,879,680
2015	119,223,742	36,439,964	7,095,640	4,966,570	167,725,917
2016	106,682,311	32,604,333	7,666,072	2,256,372	149,209,088
2017	118,230,900	27,030,745	6,942,667	3,940,786	156,145,097
2018	117,984,710	29,145,506	5,919,650	5,350,332	158,400,198

(1) Includes connections from Wilderness Rim.

Figure 2-1 shows the monthly variation in water demand by customer class.

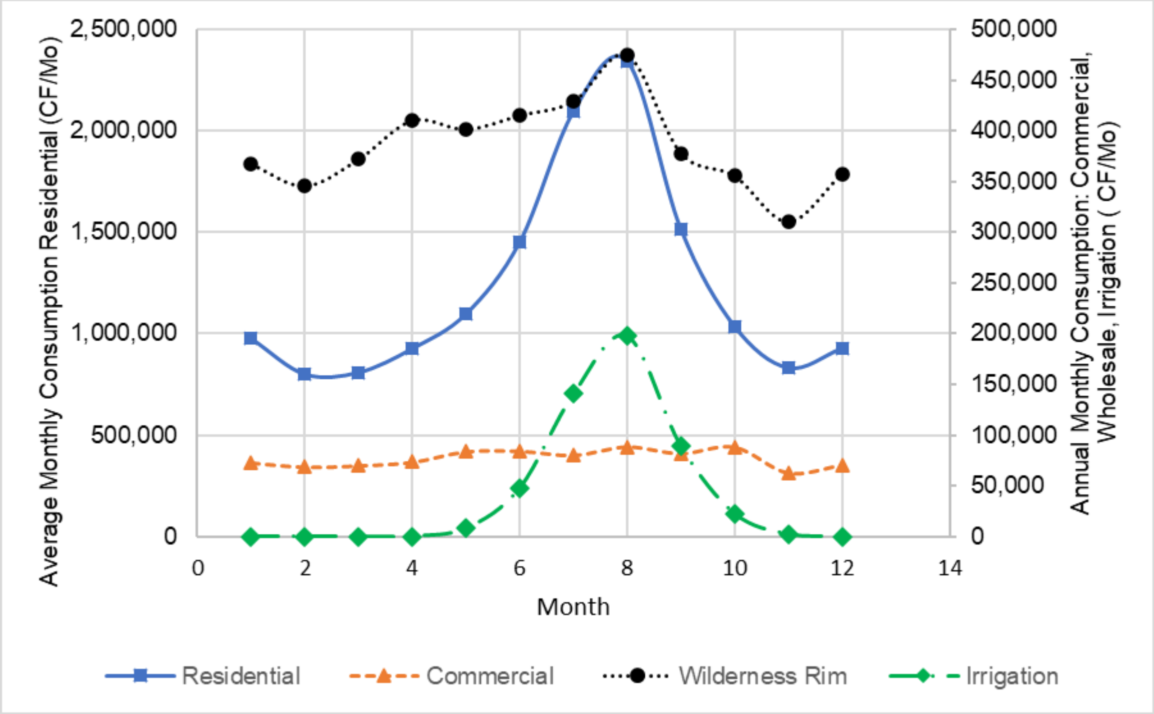

FIGURE 2-1

Monthly Demand by Customer Class

DISTRIBUTION SYSTEM LEAKAGE (DSL)

Distribution System Leakage is the metered source production less the metered consumption of water. This difference is due to leaks in the system, faulty meters, flushing of mains, fire suppression and unmetered uses such as unauthorized water use. Water used for flushing or fire suppression that is estimated or measured is removed from the calculation of unmetered water. Table 2-7 provides the Sallal's distribution system leakage for the period 2010 through 2018.

TABLE 2-7

Distribution System Leakage

Year	Production (gal/yr)	Consumption (gal/yr)	Other Authorized Uses (gal/yr)(1)	DSL (gal/yr)	Percent Unmetered	3-Year Rolling Average
2010	164,823,438	151,624,963	-	13,198,475	8.01%	-
2011	143,179,266	130,411,855	-	12,767,411	8.92%	-
2012	156,065,689	152,747,726	-	3,317,963	2.13%	6.35%
2013	166,326,611	157,593,031	-	8,733,581	5.25%	5.43%
2014	158,981,685	151,879,680	-	7,102,006	4.47%	3.95%
2015	172,445,648	167,725,917	-	4,719,730	2.74%	4.15%
2016	160,957,595	149,209,088	-	11,748,507	7.30%	4.83%
2017	173,300,800	156,145,097	2,480,841	14,674,862	8.47%	6.17%
2018	179,691,400	158,400,198	5,483,199	15,808,003	8.80%	8.19%

(1) Includes flushing.

Sallal's distribution system leakage is less than 10 percent of the production volume, and meets DOH requirements.

PEAKING FACTORS

In order to project future maximum day demand and peak hour demand, peaking factors are used. The ratio between average day demand and peak day demand is not the same each year. A peaking factor is a ratio between average day and maximum day based on historical system data, or other data, if system specific data is not available.

Maximum Month Demand

Using the monthly production data for the period 2010 through 2018, the average monthly production for Sallal was 13.66 million gallons. The maximum monthly water produced by the system was in July 2015, during which 30.66 million gallons were produced. This provides a maximum month to average day peaking factor of approximately 2.24 (30.66/13.66).

Maximum Day Demand

Sallal started recording water production on a daily basis through the use of its SCADA system in early 2018. Prior to that period water production was recorded manually each working day. Weekend production, prior 2018, was averaged over 2 or 3 days. The Land Use and Service Capacity Study (June 2013), used a peak day factor of 2.33. Peak day production data are presented in Table 2-8 below. For the purposes of this report, a 2.58 peak day factor will be used.

TABLE 2-8

Peaking Factor

Date	MDD (mgd)	MDD (gpm)	ADD(1) (mgd)	Peak Factor
8/3/2009	1.36	946	0.50	2.72
7/23/2010	1.01	698	0.45	2.23
8/19/2011	0.99	685	0.39	2.53
8/16/2012	0.93	644	0.43	2.17
7/6/2013	1.36	945	0.46	2.98
7/4/2014	1.24	861	0.44	2.84
8/4/2015	1.45	1,006	0.47	3.07
8/15/2016	1.09	757	0.44	2.47
8/2/2017	1.05	729	0.46	2.26
7/29/2018	1.08	749	0.43	2.49
Average				2.58
Median				2.51
3rd Quartile				2.81
Average and Standard Deviation				2.89

(1) ADD for the year.

Peak Hour Demand

The maximum quantity of water consumed over a 1-hour period during a maximum day demand is termed the peak hour demand. Sallal does not have precise records of peak hour demand. If precise records of peak hour demand are not available, the peak hour demand is often expressed in terms of a peaking factor. The peaking factor for the peak hour demand is defined as the ratio of peak hour demand in gpm to the maximum day demand expressed in gpm. Generally accepted peak hour factors range from 1.5 to 2.5. The DOH *Water System Design Manual* provides a methodology for calculating peak hour demand (PHD). The equation has been structured to accommodate the ranges of peak hourly to maximum daily demand ratios reported as a function of system size in the literature and by various water systems in Washington. The generalized equation is as follows:

$$PHD = (MDD/1440)[(C)(N) + F] + 18$$

Where:

PHD = *Peak Hourly Demand, (gallons per minute, gpm)*
C= *Coefficient Associated with Ranges of ERUs*
N= *Number of Service Connections, ERUs*
F= *Factor Associated with Ranges of ERUs*
MDD= *Maximum Day Demand, (gpd/ERU)*

The values for C and F in the peak hour demand formula are taken from the DOH *Water System Design Manual*, Table 5-1, page 5-8. For Sallal, C is equal to 1.6 and F is equal to 225. Using the above formula, Sallal's maximum day to peak hour factor is approximately 1.7.

EQUIVALENT RESIDENTIAL UNIT

The use of Equivalent Residential Units (ERUs) is a method of comparing water use of residential customers to the average water use of non-residential customers. An ERU is computed by dividing total volume of water consumed by single-family units by the number of this class of water users. An ERU can be calculated over a 1-year period to yield the average day demand/ERU and estimated over shorter periods, for example a maximum day.

ERU Calculation

Table 2-9 presents the water use per ERU. The water used by an ERU is calculated by taking the total residential consumption and dividing it by the number of residential connections in the system. The residential connections include the connections associated with the Wilderness Rim system. Table 2-9 provides an estimate of daily water consumption per ERU and per capita for Sallal by year from 2010 to 2018, and the average of the years 2012 to 2018.

TABLE 2-9

Equivalent Residential Units

Year	Sallal Residential Consumption (gal/yr)	Sallal Residential Connections	Sallal Consumption/ ERU	Sallal Consumption/ gpcd	Wilderness Rim Consumption(1)	All Residential ERU Average
2010	98,878,771	1,441	188	65.0	40,759,492	
2011	84,736,626	1,448	160	55.1	34,842,139	
2012	102,932,347	1,468	192	65.9	38,106,636	184
2013	104,800,373	1,510	190	65.4	41,059,066	187
2014	106,893,583	1,522	192	64.1	36,603,530	183
2015	119,223,742	1,534	213	70.7	36,439,964	198
2016	106,682,311	1,547	188	62.0	32,604,333	175
2017	118,230,900	1,591	204	68.3	27,030,745	180
2018	117,984,710	1,608	201	66.9	29,145,506	180
Average (2012-2018)			**198**	**66.2**		**184**

(1) Wilderness Rim Consumption includes DSL. Sallal does not track DSL within Wilderness Rim.

As indicated, water use per ERU can fluctuate from year to year based on consumption patterns, weather, demographics and other factors. Sallal demand averaged 198 gpd per ERU over the period 2012 – 2018.

Current Number of ERUs

The total number of ERUs within the system is calculated by dividing water use within the various customer classes, including DSL, by the ERU water use value for that year. This provides an overall number of ERU. Table 2-10 provides the conversion to the total number of ERUs by customer class including DSL. The average water consumption for the years 2012 – 2018 is 184 gpd/ERU (Table 2-9). Annual system ERUs were estimated based on the annual water production and vary from year to year depending upon water use (Table 2-10). There was little growth in the system during 2010 to 2015, the Tannerwood Plat with 70 new homes being the only significant development. In 2016 and 2017, there were two additional plats totaling 61 homes. In 2018, an additional 17 homes connected to the system

TABLE 2-10

Total Number of Equivalent Residential Units

	Sallal Residential		**Wholesale (WR)**		**Commercial**		**Irrigation**		**Other Authorized Uses**		**DSL**		
Year	**Consumptions (gal/yr)**	**ERUs(1)**	**Consumption (gal/yr)**	**ERUs(1)**	**Consumption (gal/yr)**	**ERUs(1)**	**Consumption (gal/yr)**	**ERUs(1)**	**Consumption (gal/yr)**	**ERUs(1)**	**Consumption (gal/yr)**	**ERUs(1)**	**Total ERUs**
2010	98,878,771	1,441	40,759,492	625	7,328,710	107	4,657,990	68			13,198,475	192	2,433
2011	84,736,626	1,448	34,842,139	625	7,066,670	121	3,766,419	64			12,767,411	218	2,476
2012	102,932,347	1,468	38,106,636	625	7,357,455	105	4,351,288	62			3,317,963	47	2,307
2013	104,800,373	1,510	41,059,066	625	7,434,836	107	4,298,756	62			8,733,581	126	2,430
2014	106,893,583	1,522	36,603,530	625	6,818,925	97	1,563,642	22			7,102,006	101	2,367
2015	119,223,742	1,534	36,439,964	625	7,095,640	91	4,966,570	64			4,719,730	61	2,375
2016	106,682,311	1,547	32,604,333	626	7,666,072	111	2,256,372	33			11,748,507	170	2,487
2017	118,230,900	1,591	27,030,745	626	6,942,667	93	3,940,786	53	2,480,841	33	14,674,862	197	2,594
2018	117,984,710	1,608	29,145,506	626	5,919,650	81	5,350,332	73	5,483,199	75	15,808,003	215	2,678
Average: 2015-2018		**1,570**		**626**		**94**		**56**				**161**	**2,534**

(1) Includes Flushing (2017) which is not included in Table 2-7. Assumes gpd/ERU consumption listed in Table 2-9.

LARGEST WATER USERS

The ten largest water users in Sallal's water service area, not including the Wilderness Rim master meters, are one residential, two irrigation, and seven commercial customers. These customers accounted for approximately 5.4 percent of total metered consumption for 2018. Average day and peak month average day metered consumption for the 2018 largest water users is shown in Table 2-11.

TABLE 2-11

Largest Water User Consumption for 2018

Customer	Average Day Metered Consumption (gpd)(1)	Number of ERUs(2)	Maximum Month Average Day (gpd)
Twin Falls Middle School Irrigation Meter	9,316	51	36,552
Terex USA, LLC	2,249	13	8,024
Rainbow Temple	2,156	12	9,502
Residential Customer	1,681	10	7,903
Edgewick Inn	1,510	9	2,167
Twin Falls Middle School Irrigation Meter	1,392	8	2,094
Edwin Opstad Elementary	1,389	8	2,461
Quinton, LLC	1,361	8	1,715
Creekside Land Company, Inc.	1,309	8	3,596
Commercial Customer	1,170	7	2,974

(1) The average day metered consumption is based on a 1-year period.
(2) Based on 184 gpd/ERU.

FUTURE WATER USE

PROJECTION OF FUTURE POPULATION AND DEMAND

Sallal serves water to members inside the City of North Bend, inside the North Bend Urban Growth Area and in unincorporated King County. The City of North Bend annexed a large area within Sallal in 2009. This annexation combined with the population and housing boom in the Puget Sound area has led to a period of rapid growth for Sallal within the City. Outside of the City growth has been low and likely will remain low, absent annexations, due to County zoning. Much of the City's Urban Growth Area (UGA outside city limits), served by Sallal, is largely developed with the Riverbend Plat and the Cedar Village Plat.

The Puget Sound Regional Council provided April 2017 data for the Forecast Analysis Zones (FAZ) FAZ6506 (Snoqualmie/North Bend) and FAZ 6910 (East King County).

Based on these data, the projected population growth in unincorporated King County is approximately 0.3 percent.

Projected growth rates for the City vary. The North Bend Comprehensive Plan (2015) presents population projections for three different years from which growth rates may be interpolated of 3.4 through 2020 and 2.4 percent from 2021 to 2035. The Draft North Bend Economic Profile Report (September 2018) projects high growth rates (10 percent to 15 percent) through 2020 but then tapers off to 0.75 percent for the years 2022 and beyond. North Bend's Wastewater Facilities Plan (November 2017) predicts an in City growth rate of 3.5 percent in 2019 which slowly tapers off to 2.66 percent in 2028 and 1.94 percent in 2038. The anticipated UGA growth rate in the Wastewater Facilities Plan varies from 1.02 to 0.81 percent

Projected growth rates in Chapters 2 and 4 use a composite growth rate, synthesizing the separate growth rate for the County and UGA, and the City. The City served area growth rate was assumed to be that given in the Economic Profile Report for the years 2019 (12 percent), 2020 (15 percent), 2021 (10 percent) and 2022 (5 percent). For the following years, 2023 - 2038 the City's growth rate was assumed to be that given in the Wastewater Facilities Plan which ranges from 3.1 percent to 1.9 percent. The growth rate used for the combined County and UGA served areas was assumed to be 0.3 percent annually. Much of the City's Urban Growth Area, within Sallal's service area is already developed, Riverbend Plat and Cedar Village Plat.

Riverbend Plat has its own water supply. We have assumed that Riverbend will continue to provide its own service. There has been no indication from Riverbend that they would want Sallal to serve them. If that request is made, an evaluation of Riverbend's water rights and the impact of providing service to Riverbend by Sallal will need to be assessed.

Table 2-12 presents the growth in ERUs in the water system through 2038 using the growth rates discussed above.

TABLE 2-12

Projection of Equivalent Residential Units

Year	Number of Sallal Consumption ERUs	Wilderness Rim ERU	Number of DSL ERUs	Number of ERUs(1)(2)
2018	1,837	626	215	2,678
2019	1,947	626	195	2,768
2020	2,033	626	203	2,862
2021	2,094	626	188	2,908
2022	2,133	626	171	2,930
2023	2,168	626	173	2,967
2028	2,341	626	187	3,154
2033	2,508	626	201	3,335
2038	2,665	626	213	3,504
2040	2,728	626	218	3,572

(1) Projected growth by the City of North Bend and County/UGA.

(2) DSL Assumptions: 2019 – 10 percent; 2020 – 10 percent; 2021 – 9 percent; 2022-2038 – 8 percent. 2019-2038 DSL percentage is applied only to Sallal ERU. The number of ERU attributable to DSL does not include Water Use Efficiency. See Chapter 5. Wilderness Rim ERU excluded.

WATER DEMAND PROJECTIONS

Water demand projections are calculated by using the ERU projections found in Table 2-12. The various growth rates are applied only to the services directly connecting to Sallal to yield the anticipated future number of ERU. Table 2-13 estimates the future water demand assuming all new ERU use 198 gpd/ERU, the average for Sallal customers. No growth is assumed for Wilderness Rim as it is essentially built-out.

The demand projections assume that Sallal and North Bend will reach an agreement for the exchange of wholesale water and that growth will continue. If Sallal and North Bend do not reach an agreement, and Sallal is not successful getting approval of its 2001 water right application, Sallal is projected to exceed its existing water right, in the year 2032, without increased water use efficiencies. This is discussed further in Chapter 4. Increased water use efficiencies, as discussed in Chapter 5, could allow for 2 to 3 years of additional growth.

TABLE 2-13

Projection of Future Water Production

Year	Number of ERUs(1)	Average Day Production (gpd)(2)	Annual Production (MG/yr)	Annual Production ac-ft/yr	Maximum Day Production (gpd)(3)	Maximum Day Production (gpm)(3)	Peak Hour Demand (gpm)(4)
2019	2,768	510,572	186.4	572.0	1,315,305	913	1,550
2020	2,862	529,184	193.2	592.8	1,363,252	946	1,599
2021	2,908	538,292	196.5	603.0	1,386,716	963	1,624
2022	2,930	542,648	198.1	607.9	1,397,937	971	1,635
2023	2,967	549,974	200.7	616.1	1,416,810	984	1,655
2028	3,154	587,000	214.3	657.6	1,512,194	1,050	1,753
2033	3,335	622,838	227.3	697.7	1,604,518	1,114	1,849
2038	3,504	656,300	239.5	735.2	1,690,721	1,174	1,938
2040	3,572	669,764	244.5	750.3	1,725,406	1,198	1,973

(1) For years 2019 and beyond projected growth based upon growth rates in the City and in the UGA/County growth rate. Includes ERU attributable to DSL.

(2) All new growth is assumed to be in Sallal at 198 gpd/ERU. Wilderness Rim is essentially built out. Example Estimated Water Use Calculation:
ADD = Year 2018 ERU ∗ 184 gpd/ERU + (Year ERU – Year 2018 ERU) ∗ 198.

(3) Maximum Day Demand (MDD) = ADD ∗ MDD Peaking Factor (2.58).

(4) Peak Hour Demand = (MDD ∗ 1,440) [(C) (N) + F] + 18) (see text for factors).

CHAPTER 3

WATER QUALITY SYSTEM ANALYSIS

INTRODUCTION

Group A public community water systems in Washington State must comply with the drinking water standards adopted by Washington State Department of Health (DOH) and the federal Safe Drinking Water Act and its amendments.

WATER QUALITY STANDARDS

The adopted standards regulate water quality parameters, including bacteriological contaminants, inorganic chemicals and inorganic physical parameters (IOCs), volatile organic chemicals (VOCs), synthetic organic chemicals (SOCs), radionuclides, and total trihalomethanes (TTHMs). Sallal is also required to conduct distribution system monitoring for bacteriological contaminants, disinfection by-products, lead and copper, and chlorine residual. A summary of the water quality standards is included in Appendix F.

Table 3-1 lists existing drinking water regulations and whether or not the regulation requires Sallal to conduct monitoring or take other action. Many of the regulations shown in Table 3-1 define water quality standards and establish water quality monitoring schedules. The implementation schedules for the regulations are subject to revision, and Sallal should continue to stay informed regarding regulatory deadlines.

WATER QUALITY ANALYSIS

This section provides analyses of the Sallal's current water quality and the system's ability to meet existing and future water quality standards. At the conclusion of the analyses, system deficiencies are identified.

TABLE 3-1

Existing Drinking Water Regulations(1)

Rule	Contaminants Affected(2)	Sallal Action Required?
Bacteriological	Coliform	Yes
Stage I/II Disinfectants/Disinfection By-Products Rule (D/DBPR)	TTHMs, HAA5, Chlorite, Bromate	Yes
Residual Disinfectant	Total Free Chlorine	Yes
Lead and Copper Rule	Lead, Copper	Yes
Inorganic Chemicals, and Physical Parameter	IOCs	Yes
Volatile and Synthetic Organic Compounds	VOCs, SOCs	Yes
Surface Water Treatment Rule (SWTR)	Microbial Contaminants	No
Information Collection Rule	Bacteriological	No
Consumer Confidence Report	Reporting Only	Yes
Surface Water Treatment Rule (SWTR)	Microbial Contaminants	No
Filter Backwash Recycling Rule	Bacteriological	No
Interim Enhanced Surface Water Treatment Rule	Bacteriological	No
Long Term 1 and 2 Enhanced Surface Water Treatment Rule	Bacteriological	No
Unregulated Contaminant Monitoring Rule	IOCs, VOCs, SOCs	Yes
Revised Public Notification Rule	Changes to timing and protocol for public notification	Yes
Arsenic Rule	Arsenic	Yes
Groundwater Rule	Bacteriological	Yes

(1) Drinking water regulations 2018.

(2) TTHM = Total Trihalomethanes; IOCs = Inorganic Chemical and Physical Characteristics; VOCs = Volatile Organic Chemicals; SOCs = Synthetic Organic Compounds.

WATER QUALITY MONITORING SCHEDULE

Water quality monitoring is required for regulatory compliance and to monitor water system conditions. DOH provides guidelines for inorganic and organic monitoring under WAC 246-290-300, Monitoring Requirements, which requires each system to prepare a Monitoring Plan that will define monitoring schedules and sample locations.

Table 3-2 lists water quality monitoring required by State regulations. Water quality monitoring requirements for VOCs and SOCs depend, in part, on monitoring waivers from DOH.

TABLE 3-2

Water Quality Monitoring

Parameter	Sample Location	Frequency Applicable to Sallal	Consequence of Exceeding Standard
Bacteriological	Distribution System	July/Aug – 6 per Month Sept-Jun – 7 per Month	Follow-up and Repeat Sampling – Imposition of Required Disinfection for Continuing to Exceed Standard
Inorganics	Source	Waiver 9 Years	Possible Required Treatment
Nitrates	Source	Annually	Follow-up and Repeat Quarterly Sampling
VOCs	Source	Waiver 6 Years	Possible Required Treatment
Lead and Copper	Distribution System	20 Samples Every 3 Years	Possible Required Treatment
Asbestos	Distribution System	One Every 9 Years	Possible Replacement of Portions of the Distribution System
Radionuclides	Source	One sample Every 6 Years	Possible Required Treatment

WATER QUALITY MONITORING RESULTS

Bacteriological

Sallal monitors for bacteriological contaminants in accordance with its Coliform Monitoring Plan included in Appendix G.

According to current population levels, Sallal is required to collect seven monthly routine bacteriological samples per month. Requirements for routine monthly bacteriologic sampling are detailed in WAC 246-290-300 according to water service population.

Routine sampling in 2010, 2013, 2014, 2015, and 2016 resulted in the detection of the presence of total coliform. Immediate notification was provided to all customers. Sallal investigated the cause of the occurrence, took the required repeat samples, and found no further evidence of contamination.

Despite a rigorous flushing program to minimize the risk of bacteriological contaminants growing in the distribution system, in September 2019 *E. Coli* was detected in the distribution system and in Well 2. Sallal issued a boil water notice which lasted for about 10 days. Sallal is now disinfecting its source water with chlorine. At the time of this writing Well 2 is offline. It will remain offline until four log removal (99.99%) inactivation of bacteriological contaminants can be ensured. Sallal is reviewing options for long term source disinfection including: larger water mains prior to the first service to ensure an appropriate residence time of the water in the pipe (CT ≥ 6), ultraviolet disinfection and ozone. A chlorine residual (≥ 0.2 mg/L) must be maintained in the distribution system, regardless of the type of source disinfection ultimately selected and approved by WDOH.

Whether or not Sallal can go back to being an unchlorinated system will depend upon many factors including: future sampling results, best management practices, member and Board desire to become unchlorinated again, and WDOH approval. Sallal will likely be chlorinated at least through 2020 and potentially for many years into the future.

Inorganic Chemicals and Physical Characteristics

Existing State law contains maximum contaminant levels (MCLs) for inorganic chemical and physical characteristics. Primary MCLs are based on health effects, and secondary MCLs are based on other factors, including aesthetics. Sampling for inorganics is required every three years, under WAC 246-290. Sallal's latest Inorganic sampling results, from 2018, showed the system inorganic water quality meets the DOH standards with no regulated parameter MCL being exceeded. Copies of the inorganic reporting forms are included in Appendix F.

Sampling for nitrates is required annually. The MCL for Nitrate is 10 mg/L. Sallal's latest nitrate sampling results for 2017, show the system nitrate level meets the DOH standards with the MCL not being exceeded. Results ranged from 1.0 mg/L to 0.2 mg/L (Appendix F).

Volatile Organic Chemicals and Synthetic Organic Chemicals

The State has adopted primary MCLs for a broad class of manufactured organic chemicals. These chemicals are further divided into volatile organic chemicals (VOCs) and synthetic organic chemicals (SOCs). The regulations and monitoring requirements for these chemicals were established by EPA and are listed in Chapter 40 of the Code of Federal Regulations (CFR), Part 141. Test results for all VOCs or SOCs monitored by Sallal in 2018 were reported as being below detectable levels in Sallal's wells (Appendix F).

Disinfection Byproducts

WAC 246-290-300(7) requires purveyors of public water systems that provide water treated with chemical disinfectants to monitor for disinfectants and disinfection byproducts. The Disinfection/Disinfectants Byproduct Rule (D/DBP Rule) establishes residual disinfectant concentrations and maximum contaminant levels for disinfection byproducts.

Trihalomethanes (TTHMs) and haloacetic acids (HAA5) are a group of organic compounds that can be formed as a result of drinking water disinfection by chlorine and are, therefore, often referred to as disinfection byproducts. TTHMs include the sum of the concentrations of four disinfection byproducts: chloroform, bromoform, bromodichloromethane, and dibromochloromethane.

Stage 1 of the D/DBP Rule was published in November 1998 and became effective in 2000. Under Stage 1 of the D/DBP Rule, the MCLs for TTHM and HAA5 are 80 micrograms per liter (µg/L) and 60 µg/L, respectively, and are based on the running annual average of two annual samples. Systems are required to prepare and implement a disinfection byproducts monitoring plan. The Stage 1 D/DBP Rule remained in effect for compliance until October 1, 2013.

Stage 2 of the D/DBP Rule was published in January 2006 and compliance with the new regulations began on October 1, 2013. Under Stage 2 of the D/DBP Rule, the MCLs for TTHM and HAA5 remain 80 µg/L and 60 µg/L, respectively; however, compliance with the MCL is based on the running annual average of each individual sample instead of the running annual average of all samples combined. The number of samples taken is dependent on the population served. Systems serving between 500 and 9,999 people must collect two samples per year

Sallal started disinfection in September of 2019. Sampling results for DBP have not yet been reported.

Chlorine Disinfection

The WAC states that if water entering the distribution system is chlorinated, it must contain and maintain a residual disinfectant concentration of total free chlorine of at least 0.2 mg/L (WAC 246-290-451(7) and WAC 246-290-010(80). Distribution system residual disinfectant concentrations measured as free chlorine must be detectable in at least 95 percent of the samples taken each calendar month.

Sallal is now taking chlorine residual samples throughout the distribution system.

Lead and Copper

Lead and Copper Rule compliance is measured by comparing the 90th percentile sample to lead and copper "action levels." The action level for lead and copper at individual water systems is based on the level of lead and copper in 90 percent of the samples or when 10 percent of the samples exceed the action level.

Sallal is required to take 20 samples every 3 years. The most recent samples were taken in 2017. As shown in the Table 3-3, Sallal is in compliance with no reported results exceeding the action level for lead or copper in 2017.

TABLE 3-3

2014 and 2017 Lead and Copper Monitoring Results

	Lead (mg/L)	**Copper (mg/L)**
Action Level, mg/L	0.015	1.3
Number of Samples Taken	40	40
Number of Samples Exceeding Action Level	0	0
Range of Results	0.004	0.67
90th Percentile	0.002	0.43

Radionuclides

Radionuclide data was collected in 2015, and, as summarized in Table 3-4, all results were reported as non-detectable, indicating conformance with the applicable MCLs.

TABLE 3-4

Radionuclide Data Summary

Wells	**Gross Alpha Radiation (pCi/l)**	**Radium 228 (pCi/l)**
1	<3.0	<1.0
2	<3.0	<1.0
3	<3.0	<1.0

Per- and Polyfluoroalkyl Substances (PFAS)

PFAs are chemicals used in manufacturing primarily as coatings. They are also used in firefighting foam. PFAs have been found to be quite mobile in groundwater and do not readily breakdown in the environment.

In 2016, the EPA established a non-regulatory lifetime health advisory level of 70 parts per trillion. No drinking water has yet been set by EPA. WDOH is currently drafting rules to include PFAs monitoring and standards in the WAC.

The State owns and utilizes a fire training station approximately 5.5 miles east of Sallal’s Well 3. Sallal sampled Well 3 in July 2018. No PFAs were found at a detection level of 30 parts per trillion.

CHAPTER 4

WATER SYSTEM HYDRAULIC ANALYSIS

INTRODUCTION

Water system planning is based on an analysis of a water utility's ability to meet level of service standards for existing and future customers. Sallal has adopted design standards which identify criteria and standards for the water system. These standards can be used to evaluate and analyze the Sallal's facilities by comparing the existing and projected system demands developed in Chapter 2 to the standards. Based on this comparison, water system deficiencies can be identified and recommendations for improvements to meet standards can be developed.

SYSTEM DESIGN STANDARDS

Performance and design criteria typically address the sizing and reliability requirements for source, storage, distribution, fire flow, and water quality. Construction standards set forth the actual materials and construction methods that contractors, developers, and Sallal must follow when constructing water system facility improvements.

Sallal's Standards, including developer extension guidelines, have been developed for Sallal and are provided in Appendix D. Sallal's Standards may be subject to modification on a time to time basis.

The DOH relies on various publications, agencies, and the utility itself to develop and establish design criteria. WAC 246-290-200, Design Standards, lists the various criteria allowed by the DOH. The following provides a brief description of the two most widely recognized performance and design standards. Table 4-1 provides a summary of the minimum allowable design standards.

GENERAL FACILITY STANDARDS

1. Average and Peak Day Demand
2. Peak Hour Demand
3. Storage Requirements
4. Fire Flow Rate and Duration
5. Minimum System Pressure
6. Minimum Pipe Sizes
7. Backup Power Requirements
8. Valve and Hydrant Spacing
9. Other System Policies

TABLE 4-1

General Facility Requirements

Standard	**DOH Water System Design Manual** ***(October 2019)***	**Sallal Standards**
Average Day and Maximum Day Demand	Average Day Demand (ADD) should be determined from metered water use data.	ADD = Metered consumption using 3-year average with adjustments for anomalies and growth. MDD = Based on peaking factor from historical data
Peak Hour Demand	Peak hour demand (PHD) is determined using equation 5-3: PHD = (MDD*N/1440)*(C*N+F)+18 C=1.6 and F=225	Same as DOH *Water System Design Manual*, Chapter 3, Equation 3-1.
Source Capacity	Capacity must be sufficient to meet MDD.	Same as DOH *Water System Design Manual*, (Chap 4.4.2).
Storage Requirements	The sum of: <u>Operational Storage</u> Volume sufficient to prevent pump cycling. <u>Equalizing Storage</u> $V_{ES} = (Q_{PH} – Q_S) * 150$ <u>Standby Storage</u> $V_{SB} = N * SB_i * T_d$ N = Number ERU based upon ERU_{MDD} SB_i = Locally Adopted SB volume T_d = Number of Days selected to meet standard $V_{SB} \geq$ 200 gal/ERU <u>Fire Suppression Storage</u> V_{FSS} = NFF * T ADD = average day demand, gpd/ERU N = number of ERU's Q_{PH} = peak hour demand, gpm Q_S = capacity of all sources, excluding emergency sources, gpm Q_L = capacity of largest source, gpm t_m = daily pump source run time, min (1440) NFF = Req'd fire flow, gpm (set by Fire Marshall) T = fire flow duration, min (set by Fire Marshall)	Same as DOH *Water System Design Manual*, using the formulas provided in the manual, Chapter 7.
Minimum System Pressure	The system shall be designed to maintain a minimum of 30 psi throughout the distribution system under peak hour demand and 20 psi under emergency conditions, including fire flow conditions during MDD.	Same as DOH *Water System Design Manual*, Chapter 8.

TABLE 4-1 – (continued)

General Facility Requirements

Standard	DOH *Water System Design Manual* *(October 2019)*	Sallal Standards
Fire Flow Rate & Duration	The minimum fire flow shall be determined by the local fire authority or WAC 246-293 for systems within a critical water supply service area (CWSSA).	Sallal's fire flow requirements are based on King County Standards and Fire Marshal's determination of required flows for non-residential structures.
Distribution	Minimum diameter of all distribution mains shall be 6 inches or greater. Smaller diameter mains must be justified by hydraulic analysis. Dead end water mains providing fire flow must be a minimum of 8-in diameter.	Same as DOH
Reliability Recommendations	• Well sources capable of supplying MDD within a 20-hour period • Sources meet ADD with largest source out of service • Backup power equipment for pump stations unless there are two independent commercial power sources • Provision of multiple storage tanks • Low and high level storage alarms • Looping of distribution mains when feasible • Pipeline velocities not > 8fps at PHD • Flushing velocities of 2.5 fps for all pipelines	Same as DOH *Water System Design Manual*, Chapter 5.4.
Valve and Hydrant Spacing	Sufficient valving should be placed to keep a minimum of customers out of service when water is turned off for maintenance or repair. Fire hydrants on laterals should be provided with their own auxiliary gate valve.	Valve and hydrant standards are outlined in Sallal's Development Standards.
Water Quality Standards	The primary drinking water regulation utilized by DOH to assess water quality and overall compliance with drinking water standards.	WAC 246-290
Booster Pump Stations	Closed system booster pumps shall be equipped with standby power facilities to operate the booster pump under PHD at 30 psi and fire flow at 20 psi. Open systems booster pumps must supply maximum day demand.	

CONSTRUCTION STANDARDS

Construction standards set forth the materials and construction standards that contractors, developers, and Sallal must follow when constructing water system facility improvements.

SYSTEM ANALYSIS

The following sections discuss the major physical components of the system, source, storage and distribution.

SOURCE OF SUPPLY ANALYSIS

According to WAC 246-290-222 Group A Water System standards, source production capacity must be sufficient to supply maximum day production requirements. In addition, the maximum instantaneous and maximum annual withdrawal limitations of associated water rights must be sufficient to supply maximum day and annual demands over the planning period.

Water Rights Analysis

All appropriations of water for public use within Washington State must be made in accordance with existing water rights and the established procedures that govern their implementation and use. Sallal's projected future water demands and its existing water rights, including maximum instantaneous and total annual withdrawal limitations, are compared in Table 4-2.

TABLE 4-2

Analysis of Projected Water Consumption versus Existing Water Rights

Year	ERUs[1]	Average Daily Production Demand (gpd)	Annual Water Production Demand (MG-yr)	Annual Water Rights (MG-yr)[2]	Annual Water Right Surplus/(Deficit)[2]	Maximum Day Demand (gpm)	Instantaneous Water Rights (gpm)	Instantaneous Water Right Surplus/(Deficit) (gpm)
2018	2,678	492,305	180	226.8	47	881	1,691	810
2019	2,768	510,572	186	226.8	40	913	1,691	778
2020	2,862	529,184	193	226.8	34	947	1,691	744
2021	2,908	538,292	196	226.8	30	963	1,691	728
2022	2,930	542,648	198	226.8	29	971	1,691	720
2023	2,967	549,974	201	226.8	26	984	1,691	707
2024	3,005	557,498	203	226.8	23	997	1,691	694
2025	3,043	565,022	206	226.8	21	1,011	1,691	680
2026	3,081	572,546	209	226.8	18	1,024	1,691	667
2027	3,118	579,872	212	226.8	15	1,037	1,691	654
2028	3,154	587,000	214	226.8	13	1,050	1,691	641
2029	3,192	594,524	217	226.8	10	1,064	1,691	627
2030	3,228	601,652	220	226.8	7	1,076	1,691	615
2031	3,264	608,780	222	226.8	5	1,089	1,691	602
2032	3,299	615,710	225	226.8	2	1,101	1,691	590
2033	3,335	622,838	227	226.8	(1)	1,114	1,691	577
2034	3,369	629,570	230	226.8	(3)	1,126	1,691	565
2035	3,403	636,302	232	226.8	(5)	1,138	1,691	553
2036	3,436	642,836	235	226.8	(8)	1,150	1,691	541
2037	3,471	649,766	237	226.8	(10)	1,162	1,691	529
2038	3,504	656,300	240	226.8	(13)	1,174	1,691	517
2039	3,538	663,032	242	226.8	(15)	1,186	1,691	505
2040	3,572	669,764	244	226.8	(18)	1,198	1,691	493

(1) ERUs count includes those attributable to DSL.
(2) Based upon Sallal's existing water right.

The annual water demand for Sallal is anticipated to exceed its existing water rights in the year 2033 based upon the growth model presented in Chapter 2. Sallal has sufficient instantaneous water rights to meet maximum day demand for the planning period. At the current time Sallal has more requests for water service than it has the ability to serve due to limitations of the annual water right. Sallal is in discussions with North Bend to exchange water as needed to best meet demand within the combined service area.

The City of North Bend received a water right permit for 3,094 ac-ft and a maximum instantaneous withdrawal of 2,646 gpm in April of 2008 contingent upon Sallal providing mitigation water for instream flows as needed. This permit provides the City of North Bend and Sallal with sufficient water to serve projected water demand, provided mitigation water is provided in accordance with the water right.

Source Capacity Analysis

Sallal has three wells available. Wells 1 and 2 produce 725 gpm each. Well 3 produces 80 gpm. Sallal has drilled a new well (Well 4) with a capacity of 1,200 gpm to provide source redundancy. This well is scheduled to come online in 2020. DOH recommends limiting pumping to 20 hours per day. The total source capacity from the Rattlesnake Wells, including Well 4, is 2,650 gpm. The water right from these wells is 1,600 gpm, which is more restrictive than the pumping reliability constraint. Sallal source capacity is assumed to be 1,600 gpm at the Rattlesnake Wells 1, 2 and 4) plus 67 gpm at Well 3 (80 gpm-20 hrs/day) for a total of 1,667 gpm. Table 4-3 presents an analysis of current production capacity to MDD.

TABLE 4-3

Source Production Capacity Analysis

Year	ERUs(1)	Maximum Day Well Production Capacity(2) (gpd)	Maximum Day Demand Production Requirement (gpd)		Well Production Capacity Surplus (Deficit)(2)	
			(gpd)	(gpm)	(gpd)	(gpm)
2018	2,678	2,400,000	1,078,869	881	1,131,753	786
2019	2,768	2,400,000	1,315,305	913	1,084,695	753
2020	2,862	2,400,000	1,363,252	947	1,036,748	720
2021	2,908	2,400,000	1,386,716	963	1,013,284	704
2022	2,930	2,400,000	1,397,937	971	1,002,063	696
2023	2,967	2,400,000	1,416,810	984	983,190	683
2024	3,005	2,400,000	1,436,193	997	963,807	669
2025	3,043	2,400,000	1,455,576	1,011	944,424	656
2026	3,081	2,400,000	1,474,959	1,024	925,041	642
2027	3,118	2,400,000	1,493,832	1,037	906,168	629
2028	3,154	2,400,000	1,512,194	1,050	887,806	617
2029	3,192	2,400,000	1,531,577	1,064	868,423	603
2030	3,228	2,400,000	1,549,940	1,076	850,060	590
2031	3,264	2,400,000	1,568,303	1,089	831,697	578
2032	3,299	2,400,000	1,586,155	1,101	813,845	565
2033	3,335	2,400,000	1,604,518	1,114	795,482	552
2034	3,369	2,400,000	1,621,861	1,126	778,139	540
2035	3,403	2,400,000	1,639,203	1,138	760,797	528
2036	3,436	2,400,000	1,656,036	1,150	743,964	517
2037	3,471	2,400,000	1,673,888	1,162	726,112	504
2038	3,504	2,400,000	1,690,721	1,174	709,279	493
2039	3,538	2,400,000	1,708,064	1,186	691,936	481
2040	3,572	2,400,000	1,725,406	1,198	674,594	468

(1) ERUs count includes those attributable to DSL.

(2) Well production capacity is based on a water right of 1,600 gpm for Wells 1, 2 and 4 and a capacity of 60 gpm at Well 3 (80 gpm for 20 hours).

Sallal has sufficient well production capacity to meet maximum day demand through the 20-year planning period.

SALLAL/NORTH BEND CONTRACT

As indicated in Tables 4-2 and 4-3, Sallal does not have sufficient water rights to serve the anticipated growth within its service area, though it does have sufficient pumping capacity. If Sallal is to serve the planned growth within its service area it will either need to obtain new water rights or obtain water from the City of North Bend.

Background

North Bend entered into development moratorium in 1999 when a review of the source production data found that the City was delivering more water than allowed under its water right. The moratorium prevented any applications for request of new water services, other than those which were vested.

Over the next several years North Bend completed several hydrogeologic studies to evaluate the potential of obtaining additional water rights that would allow for the withdrawal of additional groundwater. The studies concluded that when water is withdrawn from the Centennial Well flow in the Snoqualmie River will be reduced. Thus, the Centennial Well Water Right requires mitigation for the reduction in instream flows during periods when established minimum instream flows are not being met.

In order to comply with the findings of the studies the City of North Bend entered into a contract with the City of Seattle, so that Seattle may supply mitigation water to the Snoqualmie River from Hobo Springs located near Rattlesnake Lake. A secondary source of mitigation water identified in the various reports, and in the water rights records is the Sallal wells.

North Bend constructed a mitigation pipeline from Hobo Springs to Boxley Creek, a tributary to the Snoqualmie River. Upon completion of the pipeline the City obtained a water right in 2008, for the new Centennial Well located at the City's Public Works property. North Bend lifted its water moratorium in February 2009.

Contract North Bend – Sallal

Sallal is negotiating with North Bend to potentially enter into a Contract for the purchase and sale of water. The concept is that if the flow from Hobo Springs is insufficient to provide all necessary mitigation Sallal would be available to provide backup mitigation water to North Bend via the mitigation pipeline between Hobo Springs and Boxly Creek near Rattlesnake Lake. North Bend would provide potable water to Sallal. The Contract would allow Sallal to continue to serve proposed growth through the planning period as it could obtain water from North Bend; North Bend would obtain surety of a backup mitigation supply in the event that the flow from Hobo Springs is insufficient to provide the requisite mitigation water.

The terms of the Contract have not been determined. The outcome of the negotiations may impact Sallal's rates, its ability to serve existing customers and future growth and the Capital Improvement Plan.

Sallal/North Bend Intertie

If the Contract negotiations are successful, Sallal will be served water from North Bend. This intertie is discussed further in Chapter 9 – Capital Improvement Plan.

BOOSTER STATION ANALYSIS

Sallal has four existing booster stations that move water through the system between pressure zones. The DOH *Water System Design Manual* establishes certain criteria for booster pumps that pump to open systems (pumping into a zone in which the hydraulic grade line (HGL) is governed by a storage tank open to the atmosphere). During normal operating conditions, a booster station pumping to an open system should be able to meet average day demand with the largest pump out of service and must meet maximum day demand with all pumps in service. Likewise, the DOH Manual provides criteria for booster stations pumping to closed pressure zones in which the HGL is established by the pumping system itself and there is no reservoir open to the atmosphere. These criteria include the requirements that the booster station must be able to maintain required system pressures under all specified conditions, including maximum day demand plus fire flow and peak hourly demand. The number or ERU served by the various booster stations is used to assess the booster station's capacity to meet current and future needs. Table 4-4 presents the ERU per reservoir zone.

TABLE 4-4

Booster Station Analysis – ERU Per Reservoir Zone

	2018	2028	2038
Rattlesnake/Uplands			
Zones – 1215, 1156, 1100, 1086, 1085, 1054, 959, 900, 872, 710	2,181	2,507	2,761
Edgewick/Middlefork			
Zones – 793, 882, 883, 920	331	479	570
Middlefork			
Zones – 883, 920	68	99	118
River Point			
Zones – 840	83	84	86
Terrell			
Zone – 903, 1009	83	84	87

(1) The ERU in the Middle Fork Zone are a part of ERU in the Edgewick/Middle Fork Zone. For example, in 2018 there were 331 ERU in both zones, not 331 + 68.

Table 4-5 provides an analysis of the booster stations within the system.

TABLE 4-5

Booster Station Analysis – Year 2040

Booster Station	Pumps to	ADD (gpm)	MDD (gpm)	Peak Hour Demand (gpm)	BPS Capacity Largest Pump out of Service	BPS Capacity	Meet ADD Req(1)	Meet MDD Req(2)
Tanner	793 Zone – Edgewick Reservoir	80	231	427	265	410	yes	yes
Edgewick	920 Zone – Closed, and Feeds to 883 Zone – Open	16	48	133	3,500	3,500	yes	yes(3)(4)
Lower Mt. Si	840 Zone – River Point Reservoir	12	35	105	125	250	yes	yes
River Point	1009 Zone – Terrell Reservoir	12	35	105	100	200	yes	yes

(1) Meet ADD with largest pump out of service.
(2) Meet MDD with all pumps in service.
(3) Three 50-hp pumps, one of which is redundant and is not included in capacity.
(4) The fire flow requirement for the Edgewick BPS in 3,000 gpm for the Genie Lifts facility.

All booster stations pump to zones with reservoirs and therefore are required to meet only maximum day demand. Edgewick booster station meets peak hour demand.

STORAGE ANALYSIS

Storage requirements for Sallal are determined according to the Department of Health Group A Public Water Systems Waterworks Standards, October 2019 for the year 2040. The storage requirements are based on the sum of the following:

- Operational Storage
- Equalizing Storage
- Standby Storage
- Fire Suppression Storage
- Dead Storage

The various storage components are shown graphically in Figure 4-1. The system reservoir storage zones are shown in Figure 4-2.

ATTACHMENT A

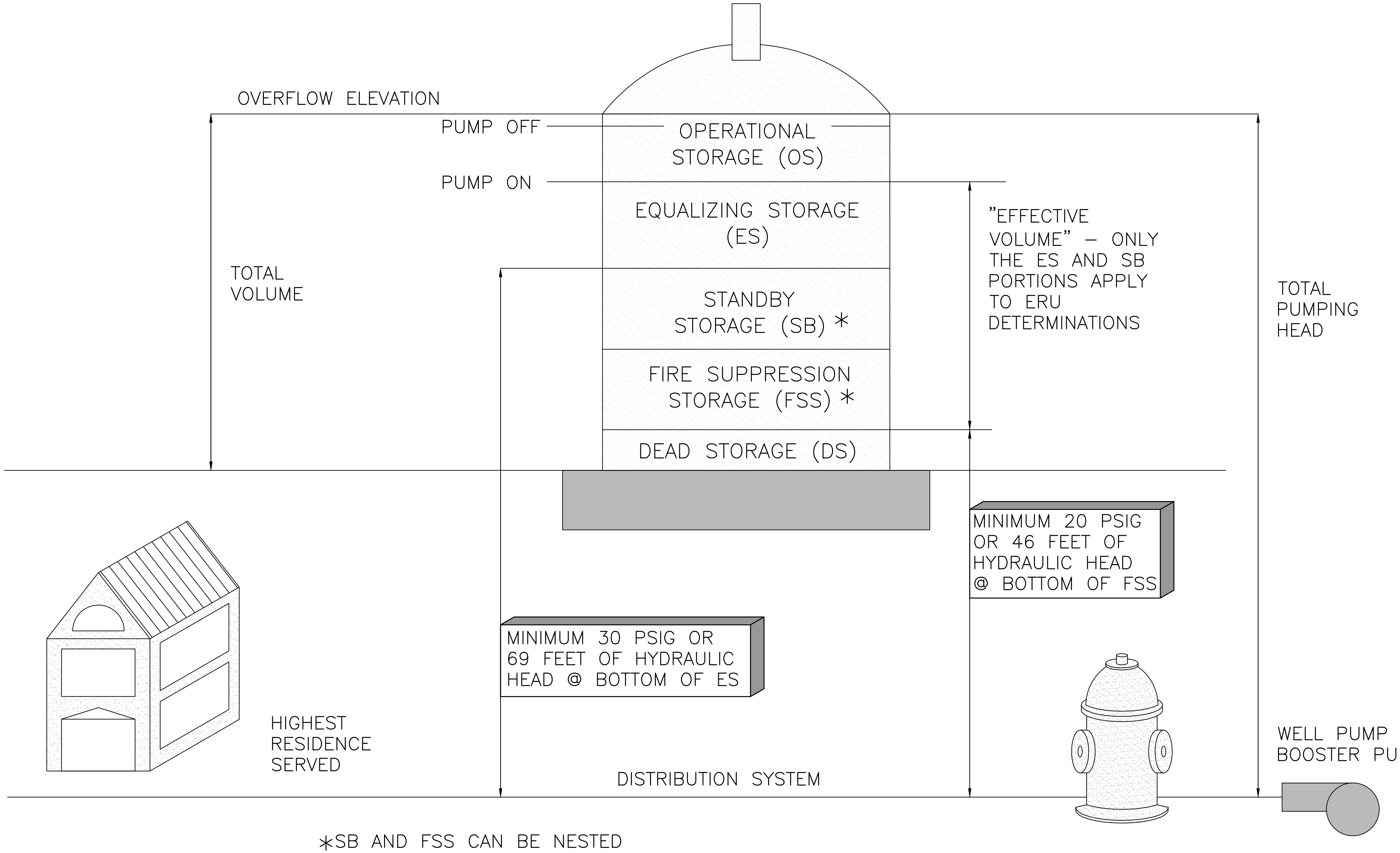

*SB AND FSS CAN BE NESTED IF APPROVED BY LOCAL FIRE PROTECTION AUTHORITY

REFERENCE: DOH WATER SYSTEM DESIGN MANUAL

SALLAL WATER ASSOCIATION

WATER SYSTEM PLAN
FIGURE 4-1
RESERVOIR STORAGE COMPONENTS

Gray & Osborne, Inc.
CONSULTING ENGINEERS

M:\Sallal\17462 Sallal WSP\Figures\Storage Schematic.dwg, 5/28/2019 3:34 PM, RYAN HALE

ATTACHMENT A

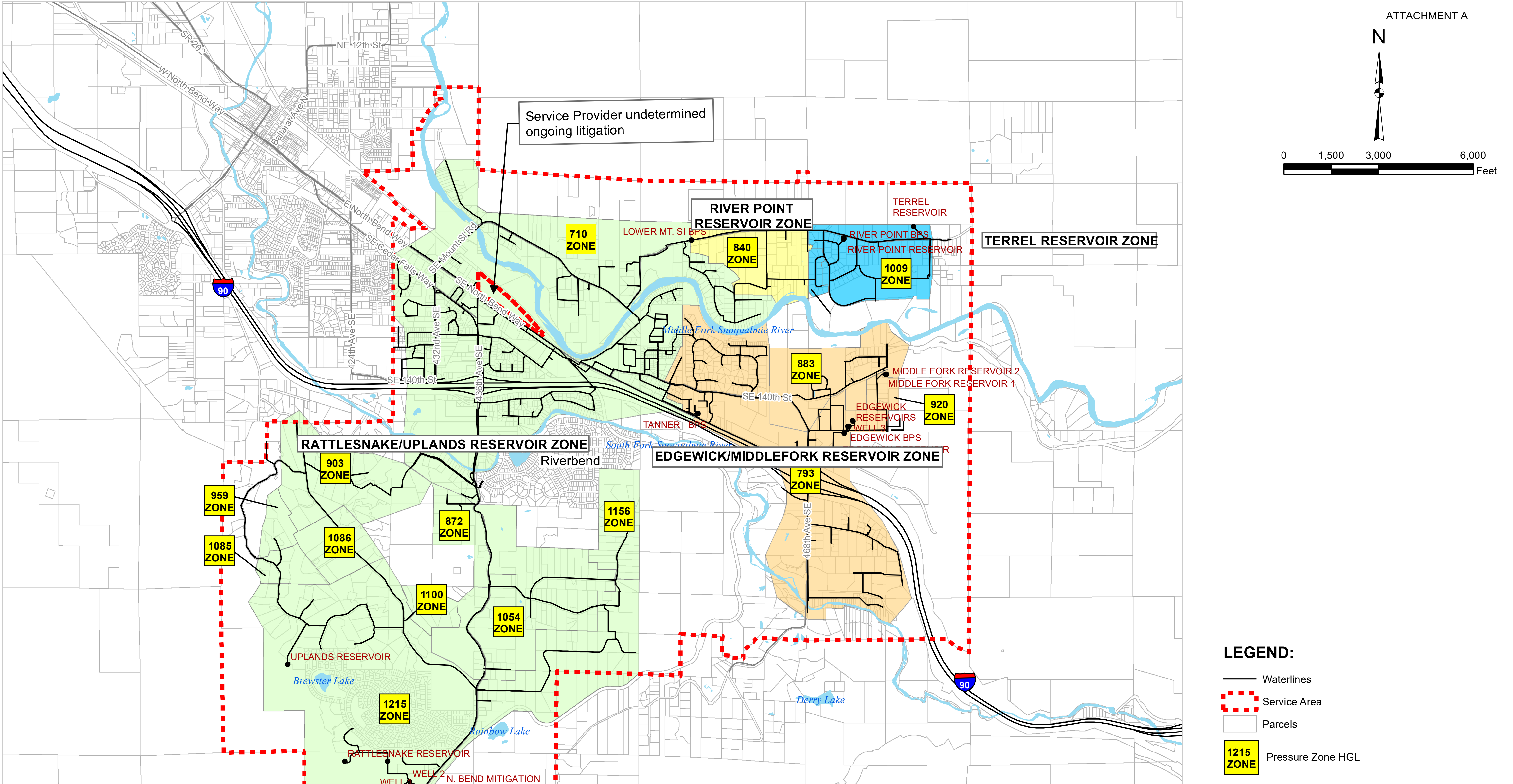

SALLAL WATER ASSOCIATION

WATER SYSTEM PLAN
FIGURE 4-2
RESERVOIR STORAGE ZONE

Gray & Osborne, Inc.
CONSULTING ENGINEERS

M:\Sallal\17462 Sallal WSP\gis\STORAGE AREAS.mxd

The Rattlesnake and Uplands reservoirs both serve the 1215, 1159, 1100, 1090, 1087, 1054, 903, 872 and the 710 Zones. A portion of the 710 Zone fire flow is provided by the Edgewick and River Point Zone Reservoirs through PRVs. The three Edgewick Reservoirs serve the 793 zones. The Middle Fork Reservoirs receive water from Edgewick Booster Station via the closed 920 zone and serve the 883 Zone (Figure 1-4).

Assumptions

For the analyses below three major assumptions have been made. First, North Bend and Sallal will agree to the exchange of wholesale water. Growth will not be curtailed due to lack of water rights. If growth is curtailed then the storage requirements will be reduced from those shown below. Second, source capacity (wells) are assumed to be available as there is redundant power at the sources. Third, the booster stations are assumed to be off, except Edgewick. Only the Edgewick booster station has dedicated redundant power. Each of the reservoir service areas act alone.

The new Rattlesnake Reservoir 2 has been approved and permitted. Construction is assumed in 2020.

All storage calculations are for the year 2038.

Operational Storage

Operational storage is the volume of the reservoir devoted to supplying the water system under normal operating conditions while the source(s) of supply are in “off” status. This volume is typically established to prevent excessive cycling of wells and booster pumps. Operational storage in a reservoir has generally been fully utilized once the reservoir is drawn down into the other storage components.

Booster pumps and well pumps used to fill reservoirs are called on and off by water level sensors in the reservoirs. The sensors in Sallal’s system have been set 2-feet apart; therefore, each reservoir has 2 feet of operational storage. Table 4-6 provides the operational storage requirements.

TABLE 4-6

Operational Storage – 2038

Press Zone	**Rattlesnake Uplands**	**Edgewick/ Middle Fork**	**River Point**	**Terrell**
Operational Storage, ft	2	2	2	2
Operational Storage, gal	**29,200**	**45,200**	**8,000**	**8,000**

Equalizing Storage

Equalizing storage is typically used to meet high diurnal demands that exceed the average daily and maximum day demands. A minimum system pressure of 20 psi is required after depletion of equalizing storage. The volume of equalizing storage required depends on peak system demands, the magnitude of diurnal water system demand variations, the source production rate, and the mode of system operation. Sufficient equalizing storage must be provided in combination with available water sources and pumping facilities such that peak hour demands can be satisfied. This analysis assumes that each reservoir zone is "stand alone;" all booster pumps are assumed to be off.

Equalizing storage is calculated using the following equation:

$$V_{ES} = (Q_{PH} - Q_S)150 \text{ minutes}$$

V_{ES} = Equalizing storage component (gallons)
Q_{PH} = Peak hourly demand (gpm)
Q_S = Total source of supply capacity, excluding emergency sources (gpm)

The equalizing storage required is summarized in Table 4-7.

TABLE 4-7

Equalizing Storage

Pressure Zone	Rattlesnake/ Uplands	Edgewick/ Middle Fork	River Point	Terrell
Peak Hour Demand (gpm)(1)	1,693	427	105	105
Source of Supply(2) (gpm)	1,600	80	0	0
Equalizing Storage Requirement (gal)	**9,000**	**1,000**	**15,000**	**16,000**

(1) Assumes 184 gpd/ERU * Peak Hour factor.
(2) All booster stations off, except Edgewick.

Standby Storage

Standby storage is provided in order to meet demands in the event of a system failure such as a power outage or an interruption of supply. The amount of standby storage should be based on the reliability of the water supply, the pumping equipment, standby power sources, and the anticipated length of time the system could be out of service.

The DOH recommended standby storage volume is calculated using the following equation:

Source Based

$SB = N*SB_i*T_d$
N = Number of ERU
SB_i = Locally adopted unit SB volume i gallons per day per ERU
T_d = Number of days selected to meet water system demand reliability standard

A reduction in storage may be allowed if the following apply.

1. Nesting – Fire Suppression and Standby storage may be nested with storage provided for the larger of the two required volumes. Per the 1996 East King County Coordinated Water System Plan this is allowed.

2. Multiple Sources with Redundant Power – Sallal has multiple groundwater sources with redundant dedicated power.

Due to multiple sources and nesting the amount of storage required may be calculated assuming 200 gal/ERU.

Standby storage calculations are based on the assumption that each reservoir zone will "stand alone" and that all booster pumps are off. Since the well sources have redundant power, source capacity is assumed to be available. Wells are assumed to operate 18 hours per day. Standby storage requirements are summarized in Table 4-8.

TABLE 4-8

Standby Storage

Pressure Zone	**Rattlesnake/ Uplands**	**Edgewick/ Middle Fork**	**River Point**	**Terrell**
Reliable Source Capacity (gpd)	2,016,000	115,200	0	0
Estimated ERUs in Each Zone (Incl. DSL)	2,814	581	88	88
Average Daily Demand (gallons)	557,300	114,954	17,411	17,470
Standby Requirement by Source (gal)	0	0	35,000	35,000
Standby Requirement by ERU (gal)	562,290	116,115	17,587	17,647
Required Standby Storage (gal)	**563,000**	**116,000**	**35,000**	**35,000**

Fire Suppression Storage

Fire suppression storage is provided to ensure that the volume of water required for fighting fires is available when necessary. The amount of water required for firefighting purposes is specified in terms of rate of flow in gallons per minute (gpm) and an associated duration, both of with are established by the King County Fire Marshal and King County Code. Fire flows must be provided while maintaining a minimum residual water system pressure of at least 20 pounds per square inch (psi) at each service throughout the system.

Fire suppression storage is calculated using the following equation:

$$V_{FSS} = NFF*T$$

V_{FSS} = Required fire suppression storage component (gallons)
NFF = Needed fire flow (gpm)
T = Duration (minutes)

The residential fire flow requirement within Sallal's service area is 1,000 gpm for 2 hours. Commercially zoned areas, such as Truck Town, have higher required flow rates. The Middle Fork Business Park (Genie lifts), has the highest fire flow requirement of 3,000 gpm for 2 hours. The Opstead School has a fire flow requirement of 2,500 gpm for 2 hours. Table 4-9 provides the fire suppression storage calculation for each pressure zone based on existing fire flow commitments.

TABLE 4-9

Fire Suppression Storage

Pressure Zone	**Rattlesnake/ Uplands**	**Edgewick/ Middle Fork**	**River Point**	**Terrell**
Fire Flow Rate (gpm)	2,500	3,000	1,000	1,000
Fire Flow Duration (minutes)	120	120	120	120
Fire Suppression Storage Requirement (gal)	**300,000**	**360,000**	**120,000**	**120,000**

Dead Storage

Dead storage is defined as the reservoir capacity that cannot be used for other storage components due to low pressures in the distribution system associated with lower water levels in the reservoir. All storage that is either below the water level that corresponds to 20 psi at the highest service connection, or above the source shut-off set point in the reservoir is considered dead storage. Table 4-10 provides the dead storage analysis for each pressure zone. The Rattlesnake/Uplands reservoirs and the Edgewick reservoirs are at different elevations, thus the feet of dead storage required does not represent simply the feet of storage multiplied by the volume per foot or all three reservoirs combined.

TABLE 4-10

Dead Storage

Pressure Zone	**Rattlesnake/ Uplands**	**Edgewick[(1)]/ (Middle Fork)**	**River Point**	**Terrell**
Highest Service Elevation (ft)	1,130	709/(800)	746	917
Required HGL at 20 psi (ft)	1,176	755/(846)	792	963
Bottom of Reservoir Elevation (ft)	1,165	733/760/760/(848)	800	969
Dead Storage (ft)[(2)]	11	20/3/3/(3)	2	2
Dead Storage (gallons)	**90,000**	**135,000**	**8,000**	**8,000**

(1) See Table 1-3 for the various base elevations of the reservoirs.

(2) Calculated based upon the various base elevations.

The highest service in the 793 Zone (Edgewick Reservoir) is the Shell gas station, which is at 709 feet. If the level in the reservoir drops to elevation 755 feet, the pressure at the Shell gas station would be 20 psi, and any further drop would cause the service pressure to drop below 20 psi. The total dead storage in the zone consists of all storage below 3 feet above the floor elevations of the new reservoirs (763 feet), however, to allow for outlet piping in the two new reservoirs.

Combined Storage Capacity Analysis

The total required storage volume is calculated based on the sum of the operational storage, equalizing storage, standby storage, and fire suppression storage components. For reservoirs with dead storage components, the sum of the above components must be provided at elevations above the upper limit of the dead storage component. In addition, the lower level of the equalizing storage must be at an elevation above that which will provide 30 psi under normal operating conditions.

Fire suppression storage and standby storage can be “nested” as that is allowed by the Fire Marshal.

The storage requirements for each reservoir service area for the year 2038 are shown in Table 4-11.

TABLE 4-11

Storage Requirements – Year 2038

Storage Component	Rattlesnake/ Uplands	Edgewick/ Middle Fork	River Point	Terrell
Operational Storage (OS)	29,200	45,200	8,000	8,000
Equalizing Storage (ES)	14,000	52,000	16,000	16,000
Standby Storage (SB)	563,000	116,000	35,000	35,000
Fire Suppression Storage (FSS)	300,000	360,000	120,000	120,000
Total Required Storage	**606,200**	**457,200**	**144,000**	**144,000**
Storage Volume	591,000	850,000	158,000	157,000
Dead Storage	90,000	135,000	8,000	8,000
Total Effective Storage	500,600	715,000	150,000	149,000
Storage Surplus	**(105,600)**	**257,800**	**6,000**	**5,000**

Storage Deficiencies

With the new reservoir in the Rattlesnake/Uplands zone, that zone of the water system is projected to have a minor storage surplus in 2020 of 10,000 gallons. A storage deficiency in 2038 is predicted, including the new reservoir. Additional storage will be needed. The volume and timing of the additional storage required will depend upon growth rates and whether or not Sallal and North Bend agree on the exchange of wholesale water.

DISTRIBUTION SYSTEM ANALYSIS

This section presents information on the computer hydraulic model of Sallal's water system and the results of hydraulic analyses conducted to evaluate the existing hydraulic capabilities of the water system. The Washington State Department of Health's WAC 246-290 requires hydraulic modeling as a component of water system plans.

The water system was analyzed using Innovyze's InfoWater hydraulic modeling software, which operates in an ArcGIS computer-aided design and drafting environment. The InfoWater model was created using a water system base map. Reservoir elevations, well capacities, and booster station settings were determined from planning documents and construction drawings.

The InfoWater model is configured with a graphical user interface. Each water system element (pipes, pumps, control valves, and reservoirs) is assigned a unique graphical representation within the model. Each element is assigned a number of attributes specific to its function in the actual water system. Typical element attributes include spatial coordinates, elevation, water demand, pipe lengths and diameters, and critical water levels for reservoirs. With attributes of each system element as the model input, the

InfoWater software produces the model output in the form of flows and pressures throughout the simulated water system.

Model Demands

A key element in the hydraulic modeling process is the distribution of demands throughout the water system. Total demands on the system are based on the existing production records shown in Chapter 2. Demands in the model are distributed throughout the water system based on eight customer billing routes. Demands for the Wilderness Rim wholesale purveyor are split evenly between the two master meter locations.

Five demand sets were used in the hydraulic analysis.

- 2018 Average Day Demands (ADD): These demands were used to calibrate the model.

- 2023 Maximum Day Demands (MDD): These demands were used to evaluate fire flow availability. Maximum Day Demands were based on the ADD multiplied by a peak day factor of 2.9.

- 2023 Peak Hour Demands (PHD): These demands were used to evaluate system pressures during peak hour demand conditions. Peak Hour Demands were based on the MDD multiplied by a peak hour factor of 1.7.

- 2040 Maximum Day Demands (MDD): These demands were used to evaluate future fire flow availability with the proposed improvements in place.

- 2040 Peak Hour Demands (PHD): These demands were used to evaluate system pressures during future peak hour demand conditions with the proposed improvements in place.

Calibration

The calibration of a hydraulic model provides a measure of assurance that the model is an accurate and realistic representation of the actual system. The InfoWater hydraulic model of Sallal’s water system was calibrated using data obtained from fire hydrant tests at various locations throughout the water system. The water system model was calibrated in November 2016 and the calibration verified in September of 2018. During these tests, the static and residual pressures were recorded while an adjacent hydrant was opened and its flow rate recorded. Static pressure is system pressure at a specific location under normal daily operation. Residual pressure is the pressure recorded adjacent to a fire hydrant that has been opened up and is flowing freely. Typically, this pressure is recorded at the fire hydrant nearest to the one being flowed. Field results were used to calibrate the hydraulic model through verification of pipe type, size, and elevations and adjustment of pipe friction coefficients.

Using the system conditions observed during each hydrant test, the hydraulic model was adjusted to generate static pressure and residual pressures at the measured hydrant before and during the flow test. The total system demands at the time of the hydrant tests were assumed to be the average day demand for 2018. Model output was calibrated to points in the model equivalent to the locations of the hydrant tests.

The pressure in the system is in part dependent upon the friction within the pipes. The friction is dependent upon pipe material, the amount of tuberculation within the pipes and age of the pipes. Friction factors for the pipes in the modeled system are adjusted throughout the calibration process until the model output best approximates the measured values. Hazen-Williams C-factors (friction factors) between 120 and 150 are used throughout the system. These friction factors are typical values for most pipe materials. The friction factors for the pipe also compensates for minor system losses through valves and fittings.

The calibrated hydraulic model produced the same static pressure as measured in the field. Modeled residual pressures are within 5 psi of actual field test data and in all cases the model over estimates headlosses. Hydraulic models are required to be within 5 psi of measured pressure readings for long-range planning, according to the DOH Design Manual, Table 8-1.

Peak Hour Analysis

According to WAC 246-290, a water system must maintain a minimum pressure of 30 psi in the distribution system under peak hour demand conditions. The existing distribution system has been modeled under 2040 peak hour demand scenarios. Results of these analyses are located in Appendix H.

The peak hour analysis identified pressures below 30 psi in one area. Table 4-12 and Figure 4-3 identify the low pressure areas. The low pressures are adjacent to the River Point Booster Station and Reservoir, only one hydrant is on this line, no services.

TABLE 4-12

Peak Hour Pressure Deficiencies

Location	Zone	Model Node Numbers	Peak Hour Pressure	Elevation	Comment
Mt. Si Road, west of River Point Reservoir	840	J-576, J-586	29.5 psi, 16.5 psi	770 ft. – 800 ft.	Low pressure only at hydrants, not service meters

ATTACHMENT A

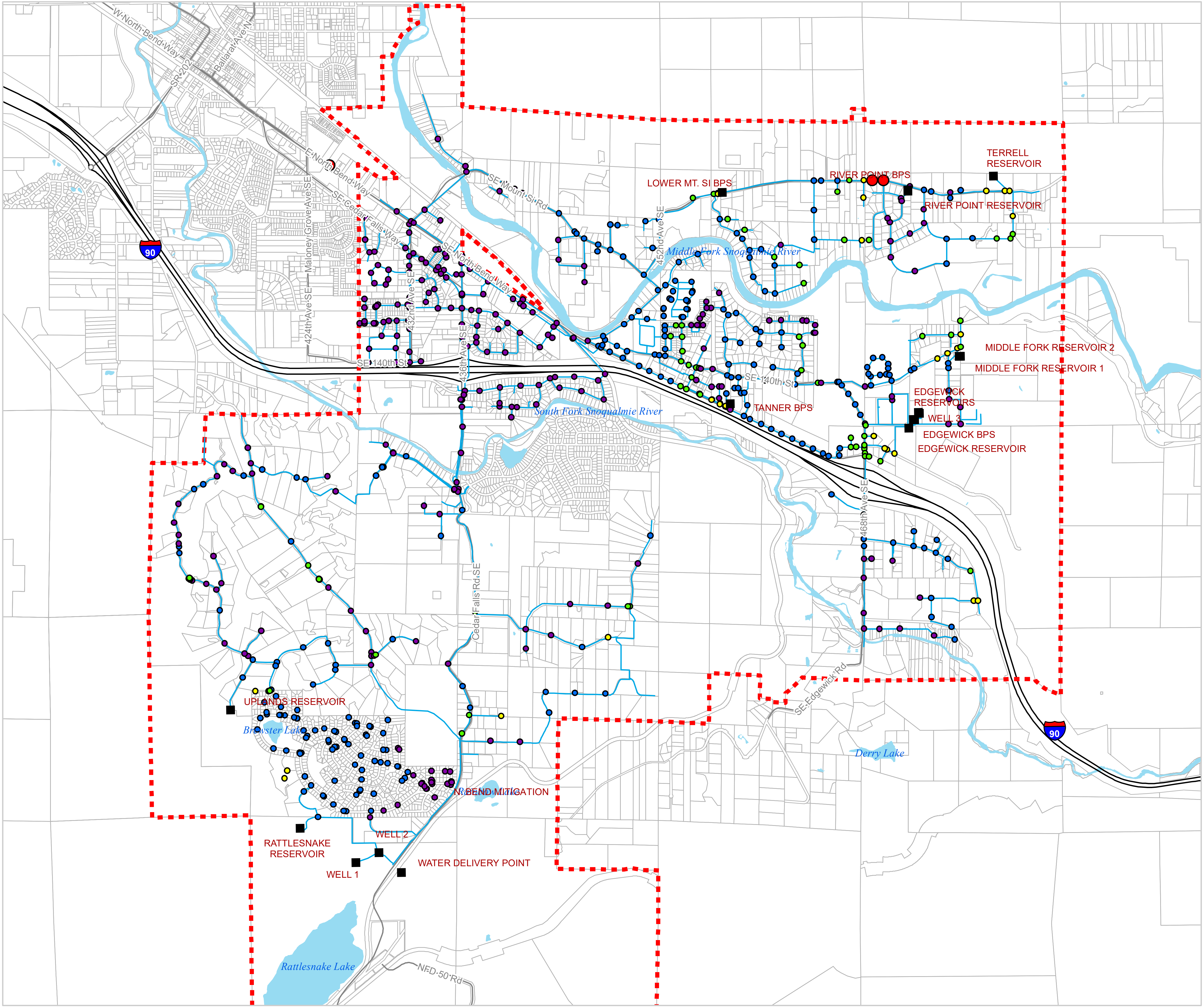

LEGEND:

- ■ Facility

PRESSURE

- ● Less than 30 psi
- ● 30 - 40 psi
- ● 40 -50 psi
- ● 50 - 75 psi
- ● Greater than 75 psi
- — Waterlines
- ▨ Service Area
- ☐ Parcels

N

0 1,500 3,000 6,000 Feet

SALLAL WATER ASSOCIATION

WATER SYSTEM PLAN
FIGURE4-3
2040 PEAK HOUR DEMAND PRESSURE

Gray & Osborne, Inc.
CONSULTING ENGINEERS

M:\Sallal\17462 Sallal WSP\gis\PHD.mxd

Available Fire Flow Analysis

The DOH *Water System Design Manual* states that a water system should be designed to provide adequate fire flow under maximum day demand conditions, while maintaining a minimum system pressure of at least 20 psi throughout the system.

The majority of the service area is Unincorporated King County zoned residential, which requires 500-gpm fire flow for 30 minutes; however, Sallal's goal is to provide a residential fire flow of 1,000 gpm for 2 hours, an urban standard. The Middle Fork Industrial Park requires 3,000 gpm of fire flow for 2 hours. Complete results of fire flow modeling are presented in Appendix H. A map showing the available fire flow at each model node can also be found in back of the report.

Table 4-13 lists the range of flows in each zone within the water system and their required flow during 2040 maximum day demand conditions with the 20-psi constraint. The available flow rate may be greater than that shown; however, the flow rates shown are those that are available while maintaining a minimum service pressure of 20 psi at all service connections. This information is shown graphically in Figure 4-4. Capital improvement projects are identified to improve fire flow in Chapter 9.

TABLE 4-13

Available Fire Flow Results with Existing System(1)

Pressure Zone	Range of Available Fire Flows(2) (gpm)	Greatest Required Fire Flow (gpm)	Meets Fire Flow Requirement?
1,215	880 – 3,500	1,000	Yes(3)
1,100	1,560	1,000	Yes
1,156	1,080 - 1,560	1,000	Yes
1,056	1,560 – 2,050	1,000	Yes
1,085	1,560	1,000	Yes
1,086	3,040	1,000	Yes
956	1,560	1,000	Yes
900	1,000 – 3,530	1,000	Yes
872	1,560	1,000	Yes
903	880	1,000	Yes(6)
710	750 –4,800	2,500	In most areas(3)(4)
793	525 – 4,550(3)	3,000	Residential requirement is not met in some areas.(3)(5)
883	1,060 – 4,655	1,000	Yes
920	1,230 – 3,000	3,000	Yes
840	880 – 1,460	1,000	Yes(6)
1,009	1,000 – 1,890	1,000	Yes(6)

(1) A complete list of results and a model node map can be found in Appendix H.

(2) Available fire flow is limited by a minimum system pressure of 20 psi, not specifically the fire flow at any specific location. The flow rates shown are with reservoir storage depleted per the DOH Water System Design Manual requirements.

(3) Unincorporated King County required fire flow is met, however, Sallal's goal of 1,000 gpm is not met. Fire flows are based on reservoir levels calculated using Sallal's goal of 1,000 gpm for 2 hours for required fire suppression storage.

(4) Fire flow is limited at the south end of 432nd Avenue because the area is supplied by a dead-end 6-inch water main. This area is currently being developed including looping and will have fire flow following completion of the development.

(5) Fire flow availability in this zone is restricted south of I-90 due to head losses in the long run of 8-inch pipe under the freeway and the dead-end 6-inch lines at the far southeast corner of the zone.

(6) Unincorporated King County required fire flow is met, however, Sallal's goal of 1,000 gpm is not met. Fire flows are based on reservoir levels calculated using the King County residential required fire suppression storage.

SUMMARY OF SYSTEM DEFICIENCIES

WATER RIGHTS

Based on the current projections, Sallal will exceed its annual water rights allotment in approximately 2030 unless Sallal obtains a contract from the City or additional water rights, as shown in Table 4-2. This is based upon the growth rate projected by the City of

ATTACHMENT A

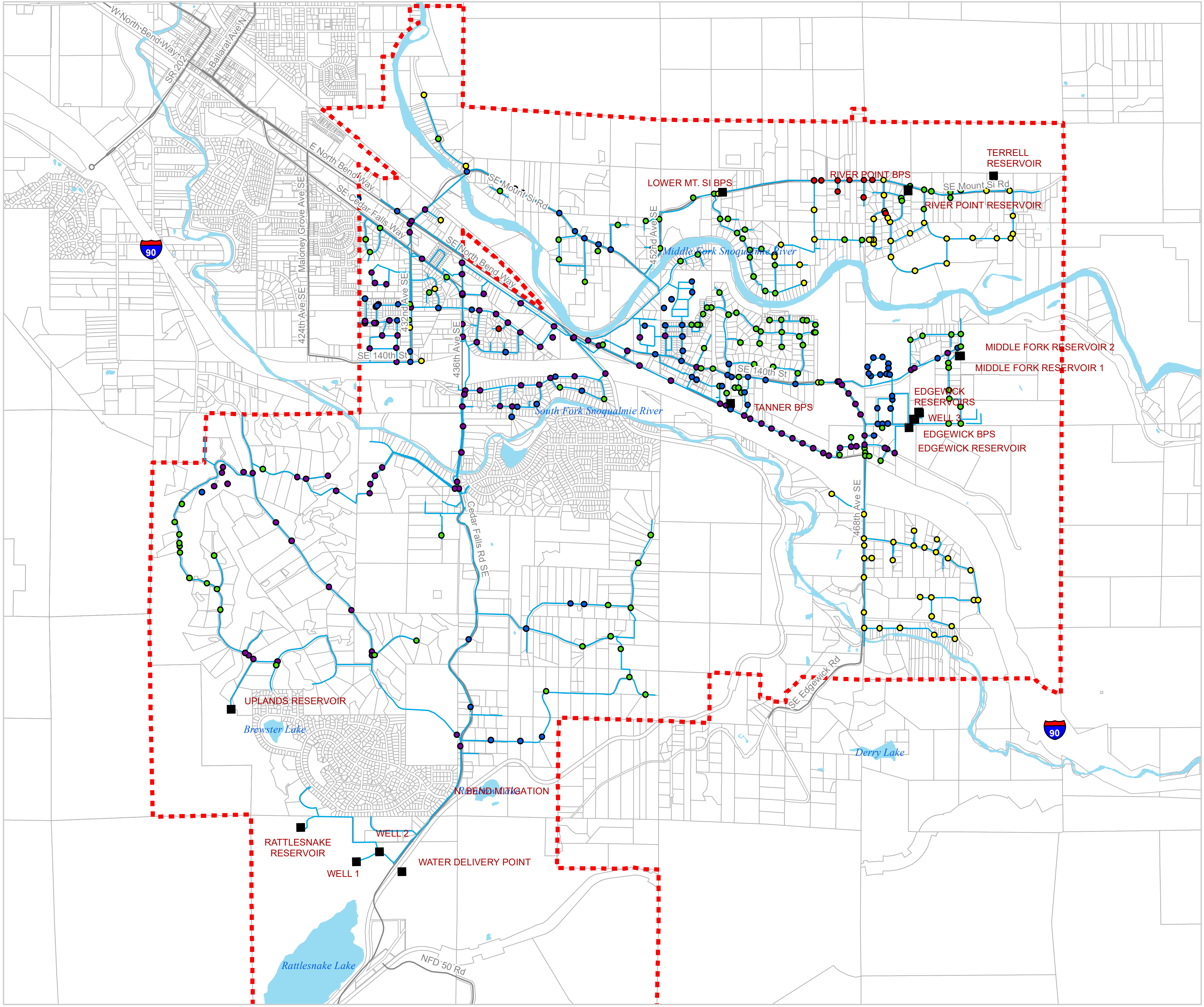

LEGEND:

■ Facility

Design Flow

- ● Less than 500 gpm
- ● 500 - 1000 gpm
- ● 1000 - 2000 gpm
- ● 2000 - 3000 gpm
- ● Greater than 3000 gpm

— Waterlines

▭ Service Area

▭ Parcels

N

0 1,250 2,500 5,000 Feet

SALLAL WATER ASSOCIATION

WATER SYSTEM PLAN
FIGURE4-4
2040 AVAILABLE FIRE FLOW

Gray & Osborne, Inc.
CONSULTING ENGINEERS

M:\Sallal\17462 Sallal WSP\gis\FIREFLOW.mxd

North Bend for the City and UGA, and the growth rate projected by PSRC for the portion of the Sallal Water Service Area within Unincorporated King County.

SOURCE OF SUPPLY

Sallal will not require additional source capacity from its main source. With the completion of Well 4 it will be able to pump at its water right capacity from its main source, 24 hours per day, while limiting each well to 18-hours, additional redundant source capacity at Edgewick is desirable but not a priority.

STORAGE

The Rattlesnake/Uplands zone of the water system is storage deficient. Additional storage is planned for 2020. A building permit has been approved by King County and the design approved by DOH. The new reservoir is to be constructed adjacent to the existing Rattlesnake reservoir. The proposed reservoir does not provide sufficient storage for the planning period. The volume of additional storage will depend upon the outcome of the contract negotiations with North Bend and determination of long-term service areas between the two entities.

BOOSTER STATIONS

Sallal’s booster stations meet demand requirements.

DISTRIBUTION SYSTEM

Sallal has areas in the system that will not receive adequate fire flow even with the recent and proposed source, and storage improvements. Projects to address these deficiencies will include upsizing existing water mains and provide looping in other sections of the system. The distribution system deficiencies are discussed below and are included in Chapter 8, Capital Improvement Plan.

Distribution System Deficiencies

The analysis identified a fire flow deficiency at all services south of I-90, along Edgewick Road. The water main supplying the area south of I-90 is approximately 2,400 LF of 8-inch water main. Headlosses through this section of water main significantly reduce the available pressure downstream of the area south of I-90. The minimum flow in the area is 525 gpm. Unincorporated King County required fire flow is met, however, Sallal’s goal of 1,000 gpm is not met. The Edgewick Road Water Main project addresses this deficiency. The Cascade East project further improves fire flow by connecting to dead end lines, downstream of the Edgewick Road project.

Fire flow is limited at the south end of 432nd Avenue SE because the area is supplied by a dead-end 6-inch water main. This area is currently being developed including looping and will have fire flow meeting standards following completion of the development.

Fire Flow is limited at the east ends of SE 134th Street and SE 131st Street, east of 461st Avenue SE because the areas are supplied by dead-end 6-inch water mains.

A small portion of the 840 Zone on SE Mount Si Road receives less than 1,000 gpm of fire flow. This area is limited by its topography and proximity to the River Point Reservoir. The available fire flows do meet the Unincorporated King County required fire flow, but not Sallal's goal of 1,000 gpm for 2 hours.

Figure 4-5 shows the resulting fire flow with the Capital Improvement Plan, which is further discussed in Chapter 9.

ATTACHMENT A

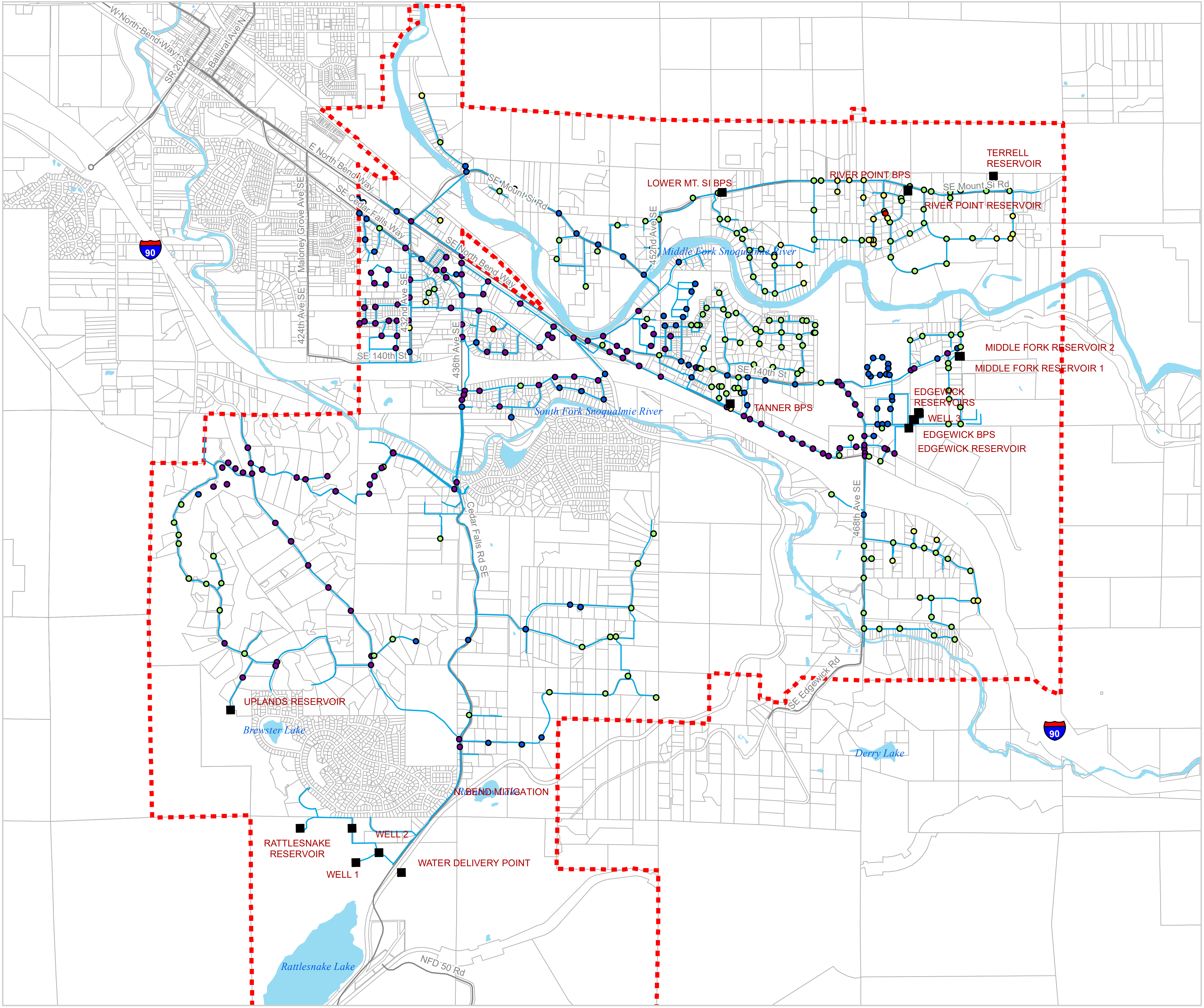

N

0 1,500 3,000 6,000 Feet

LEGEND:

■ Facility

DESGN_FLOW

● Less than 500 gpm

● 500 - 1000 gpm

● 1000 - 2000 gpm

● 2000 - 3000 gpm

● Greater than 3000 gpm

— Waterlines

▭ Service Area

☐ Parcels

SALLAL WATER ASSOCIATION

WATER SYSTEM PLAN
FIGURE4-5
2038 AVAILABLE FIRE FLOW
WITH CIP PROJECTS

Gray & Osborne, Inc.
CONSULTING ENGINEERS

M:\Sallal\17462 Sallal WSP\gis\FIREFLOW - CIP.mxd

CHAPTER 5

WATER USE EFFICIENCY

OBJECTIVE

The objectives of this chapter are to identify Sallal's water use efficiency requirements, evaluate past conservation efforts and describe the Water Use Efficiency Program.

WATER USE EFFICIENCY RULE BACKGROUND

The Washington Legislature passed the Water Use Efficiency Act of 1989 which was codified in RCW 43.20.230. The Act directed the Department of Health (DOH) to develop procedures and guidelines relating to water use efficiency. In response to this mandate, the Department of Ecology (Ecology), the Washington Water Utilities Council, and DOH jointly published a document entitled Conservation Planning Requirements (1994). The Municipal Water Supply Efficiency Requirements (2003) amended or added RCW 43.20, 90.03, 90.46, 90.48, 90.54, 90.82 and 70.119A.110 to require water use efficiency measures. Regulations and guidance implementing the additional requirements of the Municipal Water Law have been finalized and implemented by the Washington Departments of Health and Ecology.

The Water Use Efficiency (WUE) regulations are contained in WAC 246-290. The Washington Department of Health released the Water Use Efficiency Guidebook (DOH Pub. #331-375) in March 2008 as a guidance manual designed to help municipal water suppliers implement the requirements of the Water Use Efficiency Rule. The third and most recent edition of the WUE Guidebook was revised in January 2017.

Required conservation measures for a public water system include water use reporting, demand forecasting methodology, and the development of a Water Use Efficiency Program. The State's conservation planning requirements including the new Municipal Water Law requirements establish varying water use efficiency requirements and measures based on the size of the water utility (number of connections). The Municipal Water Law requires Water Use Efficiency Plans for water utilities the size of Sallal's (1,000 to 2,499 connections) to "*Quantitatively or qualitatively evaluate water use efficiency measures to determine if they are cost-effective from the societal perspective*" (WAC 246-290-810). Sallal is required to assess a minimum of five measures due to its size.

As of December 2018, Sallal served 1,664 members, plus Wilderness Rim as a wholesale customer. A medium system is defined as serving between 1,000 and 25,000 customers. Sallal is classified as a smaller "medium" sized public water system. Consistent with the state guidelines, Sallal's Water Use Efficiency Program contains: planning and water demand forecasting, distribution leakage standards, customer goals setting and annual WUE reporting.

Approval of this water system plan acts as approval the Water Use Efficiency Program. A public meeting was advertised and held on February 18, 2020 at a regularly scheduled Sallal Board meeting. No comments were received.

BACKGROUND ON SALLAL'S WATER USE EFFICIENCY PROGRAM

Sallal is an associate member of the East King County Regional Water Association (EKCRWA). EKCRWA is a member of the Central Puget Sound Water Suppliers Forum, which was instrumental in the development and sustainment of the Partnership for Water Conservation that supports a variety of regional and local water conservation media, and the proposed development of regional and statewide conservation policies and Best Management Practices (BMPs). Sallal continues to support the work of the EKCRWA, the Forum and the Partnership for Water Conservation.

In 1989, the eastern portion of King County was designated a Critical Water Supply Area and EKCRWA was formed. The EKCRWA developed a Coordinated Water Supply Plan (CWSP), which was approved in 1990. The CWSP sets out a variety of tools to achieve water conservation. The tools are generally related to education and outreach, financially incentivized technical programs such as water efficient retrofits, water use reporting on bills, leak detection, water conservation rate structure, water-efficient irrigation, and improved construction standards. Water savings for the East King County area of up to approximately 25 percent over the period 1994 to 2050 were predicted if the conservation tools were effective. The WDOH's Conservation Planning Requirements also provide conservation programs and requirements for data collection and forecasting and evaluation of conservation programs.

Since the approval of the East King County Coordinated Water Supply Plan by the King County Council in June of 1990, and its 1996 update, Sallal has developed and implemented ongoing programs to work toward achieving the goals set by the regional plan by reducing water demand.

Sallal began water use efficiency conservation efforts in 1995 with the adoption of an inclining block rate structure. These rate adjustments were coupled with increased information to assist in the water efficiency program. Specific management goals in the 2009 Water System Plan include:

- Attain maximum utilization/efficiency of current water supply;
- Maintain or reduce annual water consumption levels;
- Maintain or reduce peak daily and peak monthly summer peak water use;
- Maintain low volumes (<10%) of lost and unaccounted for water (DSL);
- Maintain Education and Awareness Program.

WATER USE EFFICIENCY PROGRAM REQUIREMENTS

The *Water Use Efficiency Guidebook* establishes varying implementation and evaluation requirements for municipal water suppliers. The requirements focus on measuring water use and the effectiveness of water use efficiency program. Fundamental elements include data collection, distribution leakage standards, performance reporting and planning (Table 5-1).

TABLE 5-1

Summary of WUE Requirements

Requirement	Deadline for MWS with 1,000 or more connections	Sallal in Compliance?
Install Production Meters	January 22, 2007	Yes
Submit first annual WUE Report	July 1, 2008	Yes
Submit service meter installation schedule	July 1, 2008	Yes
Set WUE goals	July 1, 2009	Yes
Meet distribution leakage standard (based on 3-year rolling average)	July 1, 2010, or 3 years after installing all service meters	Yes
Complete installation of all service meters	January 22, 2017	Yes

Water Meters

Metering all water production and consumption is critical for determining system wide and individual water use efficiency, for collecting revenue for water sold and for evaluating distribution system leakage. The WUE Rule sets requirements for collecting source and service data. Sallal meets all of the metering requirements. Source meters must be read monthly and reported as monthly and annual totals. Service meter totals only have to be reported in annual amounts. Sallal currently reads source meters daily and service meters monthly. Through the SCADA system additional time interval data may be recorded for the source meters. Sallal reports monthly and annual water produced, annual water consumed, and annual totals for each customer class.

Service meter data are reviewed at every billing for possible leaks or unusually high water usage. Members are notified either by phone or by letter if a possible leak or unusually high usage detected.

Sallal currently replaces service meters on approximately a 15-year cycle. Meters are replaced based upon age, service condition, or apparent consistent under readings based upon past history of water use at the property.

Data Collection

Sallal collects data in compliance with WUE requirements and to efficiently and effectively manage its system. Table 5-2 presents a summary of the data collected by Sallal.

TABLE 5-2

Summary of Water Use Data Collection

Required Data Type	Unit of Measure	Collection Frequency	Comments
Water Service Connections	# connections	Annual	As of (date)
Source of Supply Meter Readings	Gallons	Daily	Production data is collected daily and reported on a monthly basis. Data collected on field sheets and by SCADA.
Import/Export from Emergency Interties			Not applicable, no use has occurred.
Wholesale water Purchased			No wholesale water has been purchased.
Peak Day – Source	Gallons	Daily	Source meter readings.
Peak Month	Gallons	Monthly	Calculated from daily source meter readings.
Seasonal data	Gallons per day	Monthly	Review data for analysis. Assess variations in water consumption
Distribution System Leakage	Gallons and Percent	Monthly/Annually	Calculated monthly and annually
Accounted for Water	Gallons	Monthly	Non-Revenue water estimated monthly and annually.
Service meters	Gallons	Monthly	Service meters are read monthly
Population Served	# people	Annual	Estimated from PSRC pop/household and other data
Economic Data			See existing water rates in Chapter 10
Conservation Data			See water forecasting in Table 2-13

EXISTING WATER USE EFFICIENCY PROGRAM EFFECTIVENESS

The 2009 Water System Plan did not set a specific goal for water use reduction per ERU. At the time of that Plan there was a proliferation of large lot development, which typically used more water than prior developed lots. Thus the 2009 Plan states "*Specific* *numeric goals for water use reduction per ERU for the Sallal system will depend heavily upon future zoning .*"

Sallal's production per connection has decreased over the years as shown in Table 5-3. For consistency with prior data, Table 5-3 includes Wilderness Rim as individual connections to the system.

TABLE 5-3

Historical Water Production per Connection

Year	Production per Day per Connection
1995	263
2000	249
2005	228
2010	214
2014	198
2018	215

Figure 5-1 shows that there has been a modest increase in consumptive water use per ERU connected to the Sallal system over the past 6 years, i.e., not including Wilderness Rim. This may be attributable to the increase in persons per ERU as annotated in Figure 5-1. Per capita water consumption has held relatively steady at approximately 66 gallons per person per day (gpcd). Water production during the period averaged 72 gpcd, down slightly from an average of 73 gpcd presented in the 2009 Water System Plan (p. 4-7).

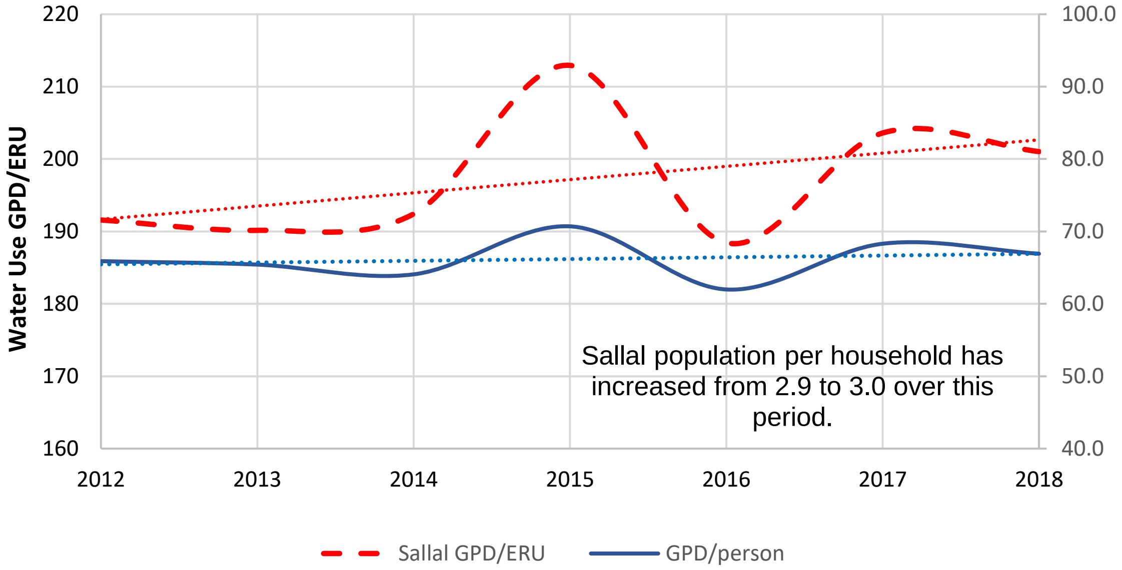

FIGURE 5-1

Consumption Water Use

Goals from the 2009 WSP are evaluated below:

- <u>Maintain or reduce annual consumption levels</u> – Table 2-3 and Figure 5-2 present historic annual production. Annual production since 2010 has varied between 439 ac-ft/yr and 551 ac-ft/yr. The more recent years show a trend in increasing production, likely associated with recent development.

- <u>Maintain or reduce peak daily and peak monthly summer peak water use</u> – Figure 5-2 shows the water production for Sallal since 2011. Maximum day demand has decreased in the past three years relative to the prior three years. Sallal would like this trend to continue.

- <u>Maintain low volumes (<10%) of lost and unaccounted for water (DSL)</u> – DSL is shown in Figure 5-3 and discussed below.

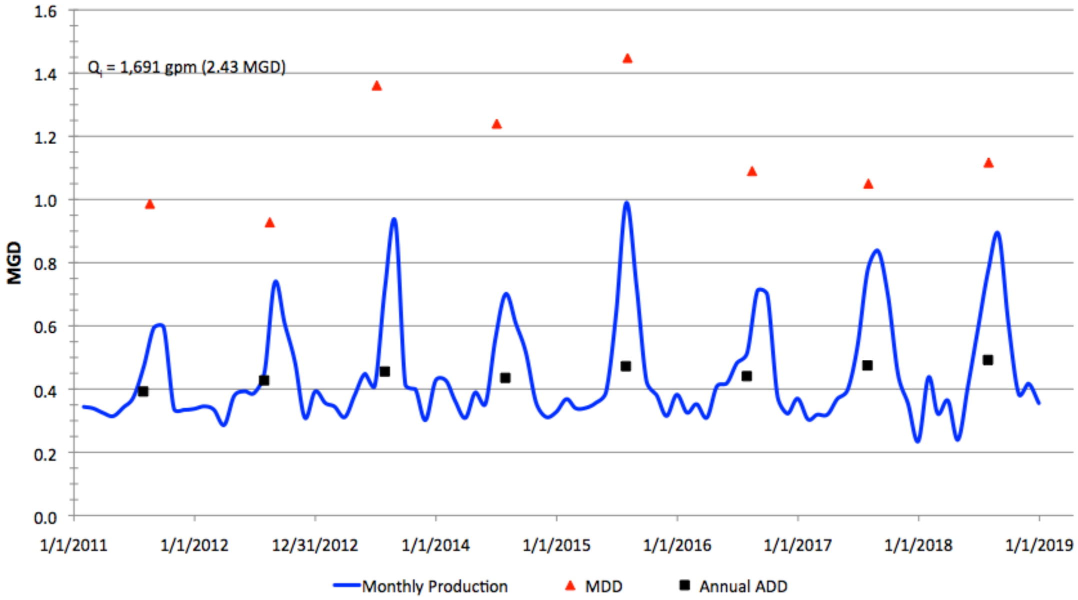

FIGURE 5-2

Annual Variation in Water Use

Distribution System Leakage

The WUE Rule requires that water distribution systems have a leakage rate of less than 10 percent of finished water production based on a 3-year rolling average.

Distribution system leakage (DSL) is defined as the difference between total water produced, or purchased from another purveyor, and all water sold through meters or otherwise used in an authorized manner. Known or credibly estimated authorized consumption can be excluded from the leakage calculation and may include uses such as construction, firefighting, and flushing.

Since 2010, the 3-year rolling average for distribution system leakage has ranged from 3.95 percent to 8.8 percent of total production, (Figure 5-3). Sallal's 3-year rolling average for the years 2016 – 2018 is 8.2 percent, which meets the 10 percent DSL requirement set forth in WAC 246-290-820(1)(b)(i).

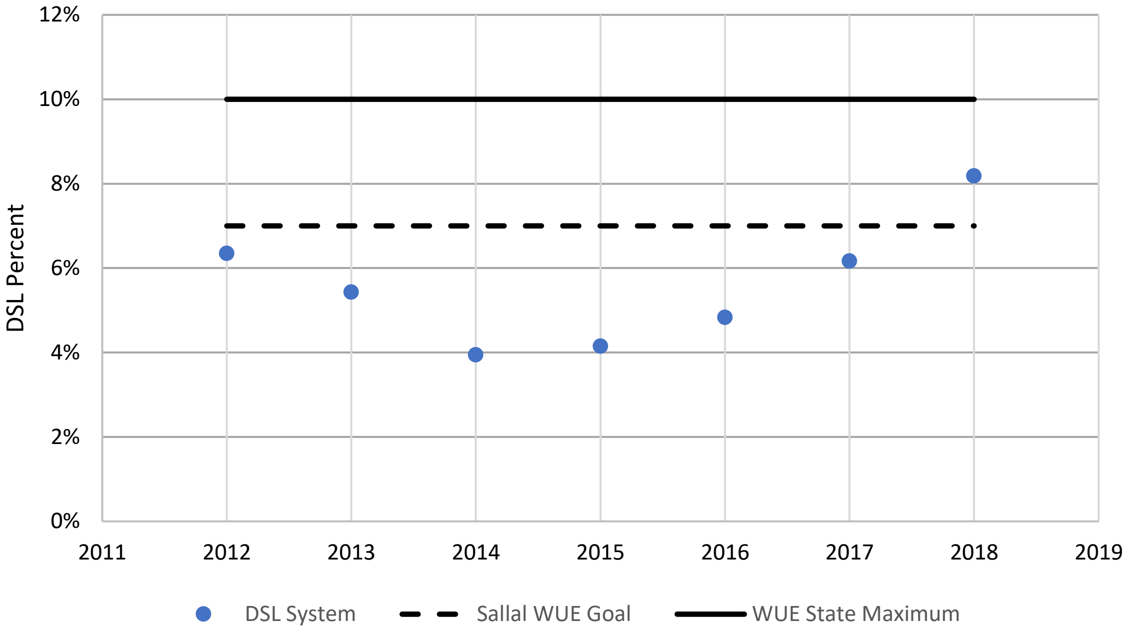

FIGURE 5-3

Historical 3-Year Rolling Average DSL

Water Use Comparison

Table 5-4 shows the water consumed by Sallal, per ERU and per capita, as well as a comparison of Sallal's ERU and per capita water use relative to other water systems in the area. North Bend is currently updating its Water System Plan. Final data from North Bend is not available.

TABLE 5-4

Summary of Local Water Use Consumption

Purveyor	gpd/ERU	gpd/Person	Data Source,	Data Years
Ames Lake	148	53	2018 WSP	2016
Bothell	180	74	2012 WSP	2007 – 2009
Carnation	172	59	2018 WSP	2014
Northshore	114	72	2016 WSP	2011 – 2013
Sallal	198	66	This WSP	2012 – 2018
Seattle Public Utilities(1)	175	-		2018
Snoqualmie	197	95	2013 WSP	
Sammamish Plateau	213	-	2013 WSP	2014 - 2016
USGS – King County(2)	-	82		2015

(1) 2019 Annual Survey of Wholesale Customers Summary of Results – Seattle Public Utilities 2019 https://www.seattle.gov/Documents/Departments/SPU/2019SummaryofSurveyResults.pdf.

(2) US Geological Survey – https://waterdata.usgs.gov/wa/nwis/water_use - "Domestic per capita use, public supplied."

WATER USE EFFICIENCY GOALS

In this period of water constraints conservation is an integral part of management and the ability to serve the burgeoning population. Water conservation, repair of leaks, and individual communication with members about suspected leaks or irrigation system problems have been a long-standing practice and continue to be fundamental to conservation objectives. Cost-effective water use efficiency measures that reduce per capita demand and reduce the ratio of the maximum day demand (MDD) to average day demand (ADD) will continue to be implemented.

The specific goals of the Water Use Efficiency Program are listed below:

- Decrease annual water consumption levels per ERU by 0.5 gallons per day per ERU each year for the next 10 years, with a goal of reaching 195 gpd/ERU by 2030. (Note: for the years 2017 and 2018, Sallal usage per ERU was been slightly above 200 gpd (Table 2-9). A starting ERU usage of 200 gpd in 2019 is assumed.)

- Reduce Sallal consumptive summer monthly and maximum day demand water use relative to average day demand. The historical average maximum day to average day demand ratio is 2.58 (Table 2-8). The goal is to reduce the ratio to 2.50 in 10 years based upon a 5-year average.

- Maintain Distribution System Leakage below 7 percent on a 3-year rolling average. As shown in Figure 5-2 DSL has been increasing in recent years. Sallal will be challenged to meet this goal.

- Continue with water conservation education through brochures, bill inserts and water saving fixtures

Figure 5-4 shows the potential impact on the number of ERU that could connect to the Sallal system if it achieves its Water Use Efficiency Goals. Ninety-nine ERU will provide capital revenue of $1,901,889 at the current "New Member Connection Fee" of $19,211 per 5/8" x 3/4" meter.

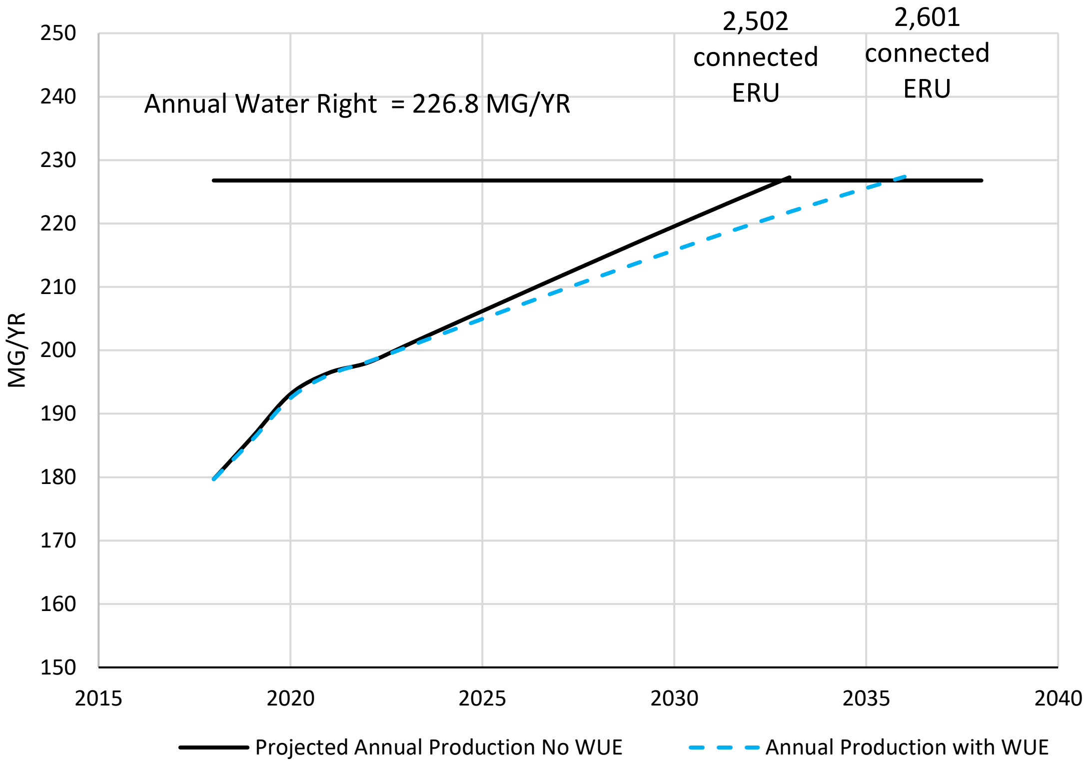

FIGURE 5-4

Projected Water Use with and without WUE Goals

The WUE rule has both mandatory and supplementary water use efficiency measures. From the WUE Guidebook "*Supply-side measures (such as leak detection surveys, installing or replacing meters, and water audits) that support supply-side goals to reduce leaks don't count towards the minimum number of measures.*" These are mandatory measures to help purveyors better understand the system.

WATER USE EFFICIENCY MEASURES

Water Use Efficiency measures are intended to reduce demand. Sallal, based upon its size, must evaluate five or more water use efficiency measures to reduce demand. This section discusses the specific measures Sallal evaluated for inclusion in its Water Use Efficiency Program. With exception to meters and wastewater reuse, Sallal may use each of these measures during this planning period to support efforts to achieve any of the Water Use Efficiency Goals listed above. Sallal will periodically review these measures and may revise them if needed to better promote water use efficiency.

Wastewater Reuse

Evaluation of the potential for wastewater reuse is mandatory. Wastewater reuse is becoming more common as water resource become limited. Reclaimed water may be used for landscaping or other non-potable uses in some situations. The potential source for reclaimed wastewater is the North Bend wastewater facility, located approximately 1-1/4 miles to the west of the Sallal service. There are four impediments to Sallal's use of reclaimed water. First, North Bend does not treat its wastewater to reclaimed water standards. Second, any reclaimed water would need to be pumped to Sallal through dedicated water mains, thus leading to high infrastructure costs. Third, the water right for North Bend's Centennial Well counts wastewater return flow to the Snoqualmie River as a part of the water right mitigation scenario. Any diminishment of return flows from the wastewater treatment plant could lead to increased mitigation requirements in compliance with the water right. Fourth, Sallal does not maintain any parks or other landscaping facilities, with the exception of its future headquarters, at which reclaimed water could be used.

Mandatory Measures

Meters

Meters are critical to understanding water production and demand in the system. Sallal replaces meters based upon the priorities previously mentioned in this chapter.

Supplemental Measures

Education and Promotion

Water Use Efficiency Program education and promotion includes educating Sallal's members (customers) and publicizing the need for effective water conservation through educational programs, distribution of DOH brochures and water bill inserts/comments. Sallal periodically includes discussion of water use efficiency in the comments section of the water bills.

Leak Detection Program

Sallal has budgeted $5,000 annually for leak detection monitoring. Leak detection will be contracted. The intent is to complete approximately 20 percent of the system per year.

Customer Leak Notification

When a customer’s usage changes by more than 10 percent from the same period of the previous year, Sallal staff notifies customers of possible leaks within the customers plumbing. Typical leak locations include, toilets, service lines or irrigation systems. A billing adjustment may be allowed in accordance with Sallal policy when the customer provides proof of repair to the billing department.

Water Use Efficiency Rate Structure

Sallal instituted its first “inclined block” rate structure in 1995 to reduce water use. The inclined block rate structure has continued since that time. This water use efficiency rate structure applies to all customers across three categories, residential, irrigation, and all others, and thus counts as three measures

Water rates can provide an economic incentive for Sallal’s members to conserve water. The effect that price has on water use has been well documented. The savings in water is based on the price elasticity of water, which varies between locations. If the education program does not show that ERU demand is decreasing, Sallal may consider other measures promote more conservation.

Irrigation Management

Sallal has no specific irrigation management program. However, Sallal has been working with high use customers, both residential and commercial, to encourage them to reduce their irrigation requirements. Sallal will continue to evaluate water use data to identify customers with high use rates and may use targeted education and outreach strategies with these customers. Strategies may include providing information on resources available through Washington State University’s Extension Services or other regional organizations.

PERFORMANCE EVALUATION

Sallal will review the data annually to assess the performance of the demand reduction measures and to compare with its goals. Water bills are reviewed monthly to assess customer water service leakage such as, changes in demand. In addition, Sallal will keep a running tally on a monthly basis to assess distribution system leakage. If the goals are not being met Sallal will consider increasing efforts in the proposed measures or instituting additional measures to meet its goal.

CHAPTER 6

SOURCE PROTECTION PLAN

WELLHEAD PROTECTION PROGRAM

INTRODUCTION TO WELLHEAD PROTECTION PROGRAM

Many communities rely on groundwater as a primary or sole source of potable water. Recognizing the importance of preserving this essential public resource, Congress mandated in the 1986 Amendments to the federal Safe Drinking Water Act that each state must develop a wellhead protection program. In Washington State this program is administered through the DOH.

In 1994, the Washington Administrative Code Section 246-290-100 was modified to include mandatory wellhead protection measures for all public water systems meeting the Federal definition. DOH refers to these systems as “Group A” systems. As part of the wellhead protection measures, administrators of Group A systems are required to develop a specific Wellhead Protection Program for their wells and well fields.

The ultimate goal of the Wellhead Protection Program is to protect potable groundwater supplies through groundwater resource delineation; potential groundwater contaminant identification and management strategies aimed at pollution prevention. Wellhead protection programs must apply best management practices (BMPs) and provide public (customer) education to users working or living within the Wellhead Protection Areas (WHPA).

Wellhead Protection Programs are intended and required to be ongoing programs that are incorporated into the management and administration of the individual water systems and are subject to periodic review and revision to meet changing conditions. The major aspects of the Sallal Wellhead Protection Program are discussed in this section. The 1998 Wellhead Protection Plan is included in Appendix I.

AQUIFER SUSCEPTIBILITY

Aquifer susceptibility refers to the potential risk for contamination of a drinking water supply by discharges or releases at or near the ground surface. In Washington, the susceptibility of an aquifer is ranked as high, moderate, or low on the basis of several factors. These include:

- The type and condition of the well’s surface seal and casing, which will prevent surface water from entering the well.

- The depth and type of the aquifer. Shallow, unconfined aquifers are more susceptible to releases at the ground surface than deep aquifers with one or more confining layers. Aquifers in granular bedrock or unconsolidated formations maybe less susceptible to contamination than bedrock aquifers where water may travel relatively quickly over long distances in joints, fissures, or cavern systems.

- Interaction with surface water. Wells in alluvial deposits adjacent to rivers may draw significant quantities of their water from the surface stream with very little resident time in the formation to aid in purification.

- Land use in the vicinity of the well. Agricultural usage with heavy ag-chemical applications, or industrial usage, are higher risk activities than undeveloped forest or grasslands. Residential usage with septic systems may be higher risk than the same land use with a public sewer system installed.

Sallal's production wells are rated as having a low susceptibility.

PRODUCTION WELLS

Water for the Sallal service area comes from three wells (a fourth well has been submitted to DOH for source approval and to King County for a well house building permit). Wells 1, 2 and 4 are located on the western flank of Rattlesnake Ridge within the boundary of the Cedar River Watershed property owned by the City of Seattle. The three wells produce approximately 90 percent of the water used by Sallal. Well 3 is located near the Edgewick Road interchange, north of Interstate 90.

Well 1, Well 2 and Well 4

Wells 1, 2, and 4 are located on Rattlesnake Ridge within the City of Seattle Watershed. Well 1 (originally labeled TW-1) was drilled in 1983, is 348-feet deep, and is completed with 8- and 12-inch casings. Well 2 (originally labeled PW-1) was drilled in 1985 is 163-feet deep, and is completed with 16-inch casing. Both Wells 1 and 2 are equipped with a 100-hp line-shaft pumps. Each well produces approximately 750 to 800 gpm at normal capacity.

Well 4 is located midway between Wells 1 and 2. It was drilled and tested in the fall of 2018 to a depth of 175 feet. A 24-hour pump test was performed at 1,200 gpm with a total of approximately 12 feet of drawdown about 1/2 of which was due to well interference from pumping at Wells 1 and 2.

Well 3 (Edgewick Well)

Well 3 is often referred to as the Edgewick Well and is located near the Edgewick interchange on Interstate 90, in the east-central part of Sallal's service area. The well site is located upgradient of commercial and industrial operations along the I-90 corridor. Well 3 was drilled and constructed in 1987, is 255-feet deep and was completed with 8-inch diameter casing. The well is equipped with a 15-hp pump and produces approximately 80 gpm under normal capacity. A second well (3A) drilled at this site, is not in use.

DELINEATION OF WELLHEAD PROTECTION AREAS

Several methods of differing sophistication can be used in the determination of the Wellhead Protection Areas for each of the production wells. A brief summary of the various methods is provided below in the order of sophistication from the least sophisticated to the most sophisticated method.

- **Calculated Fixed Radius Method (CFR).** This method is the simplest approach and is based on a simplified water balance formula. This method does not require any knowledge of the aquifer characteristics, except for porosity. The well capture zone derived from this approach simply consists of a circular area surrounding the wellhead. No consideration is given to the regional hydraulic gradient, or aquifer boundaries.

- **Hydrogeologic Mapping.** This method involves mapping the aquifer boundaries, particularly recharge areas, in relation to the wells of interest. A qualitative assessment of groundwater can provide general information on the source of water to wells and its direction of flow. Hydrogeologic mapping is usually carried out to some extent for any WHPA analysis and can generally be used to determine the ultimate recharge areas of the aquifer. A significant portion of the Snoqualmie Valley including the project area has been mapped as part of a U.S. Geological Survey water resources investigation.

- **Conventional Analytical Modeling.** This method takes into account the basic aquifer characteristics, such as transmissivity, aquifer thickness and hydraulic gradient. Analytical modeling most often assumes steady-state conditions and can be used to calculate capture zones to the boundary of the hydrogeologic system. An example of a commonly used analytical model is the U.S. EPA WHPA code.

- **Sophisticated Analytical Modeling.** This method utilizes techniques that have more recently been developed that can take into account boundary conditions and variable recharge conditions in addition to the basic characteristics, such as transmissivity, aquifer thickness and hydraulic gradient. TWODAN is one such model developed by Fitts (1995). This model is a two-dimensional analytical groundwater flow model developed to evaluate groundwater flow and determine WHPAs. The program is capable of solving large numbers of analytical solutions to model diverse irregular boundary conditions, and is more sophisticated than other analytical models such as the U.S. EPA WHPA code.

- **Numerical Groundwater Flow Modeling.** This method is the most sophisticated used to delineate WHPAs. Groundwater flow models are often used for complex systems composed of irregular aquifer boundaries and multiple wells. A numerical groundwater flow model incorporates the hydraulic characteristics and boundary conditions of the aquifer and uses a "particle tracker" to numerically simulate the rate and direction of "particles" of groundwater moving through the system. The final accuracy of the WHPA derived from a numerical groundwater flow model is a function of how well the groundwater flow model can simulate observed field conditions. This is often a function of how much data is available to develop and verify the model. When the data is limited or cost prohibitive to obtain (i.e., additional monitoring wells), a less sophisticated WHPA delineation method may be more appropriate than numerical groundwater flow modeling.

The Sallal Wellhead Protection Areas were delineated by Compass Geographics using a combination of hydrogeologic mapping and TWODAN sophisticated analytical modeling. Groundwater modeling to determine the capture zones for Sallal's production wells was performed using the two-dimensional analytical groundwater flow model TWODAN (version 4.0; Fitts, 1995). The two-dimensional analytical element groundwater model was used to estimate the 6-month, and 1-, 5- and 10-year capture zones for Sallal's production wells. The groundwater flow field is simulated to be consistent with known water level data and aquifer properties. Pumping wells are then inserted into the flowfield and particle traces are used to delineate the time of travel capture zones for each well or wellfield. Wells of Sallal are completed in a hydraulically similar aquifer. Two aquifers (the valley aquifer and the bedrock upland aquifer) were modeled in the simulation used to model the Sallal and nearby Riverbend production wells.

The TWODAN analytical modeling was performed on all three of Sallal's supply wells. The final WHPA for Wells 1 and 2 was modified using hydrogeologic mapping and interpretation of previous hydrogeologic investigations conducted in this region of complex hydrogeology. Figure 6-1 shows the WHPA for Wells 1, 2 and 4. The 6-month travel time for the groundwater extends to Masonry Pool, a part of the Chester Morse Lake. Travel times for the 1-year, 5-years and 10-years extend into the reservoir, maintained by Seattle Public Utilities, and thus are not shown. Figure 6-2 shows a hydrogeologic cross-section between the wells. The WHPA is not altered by the

ATTACHMENT A

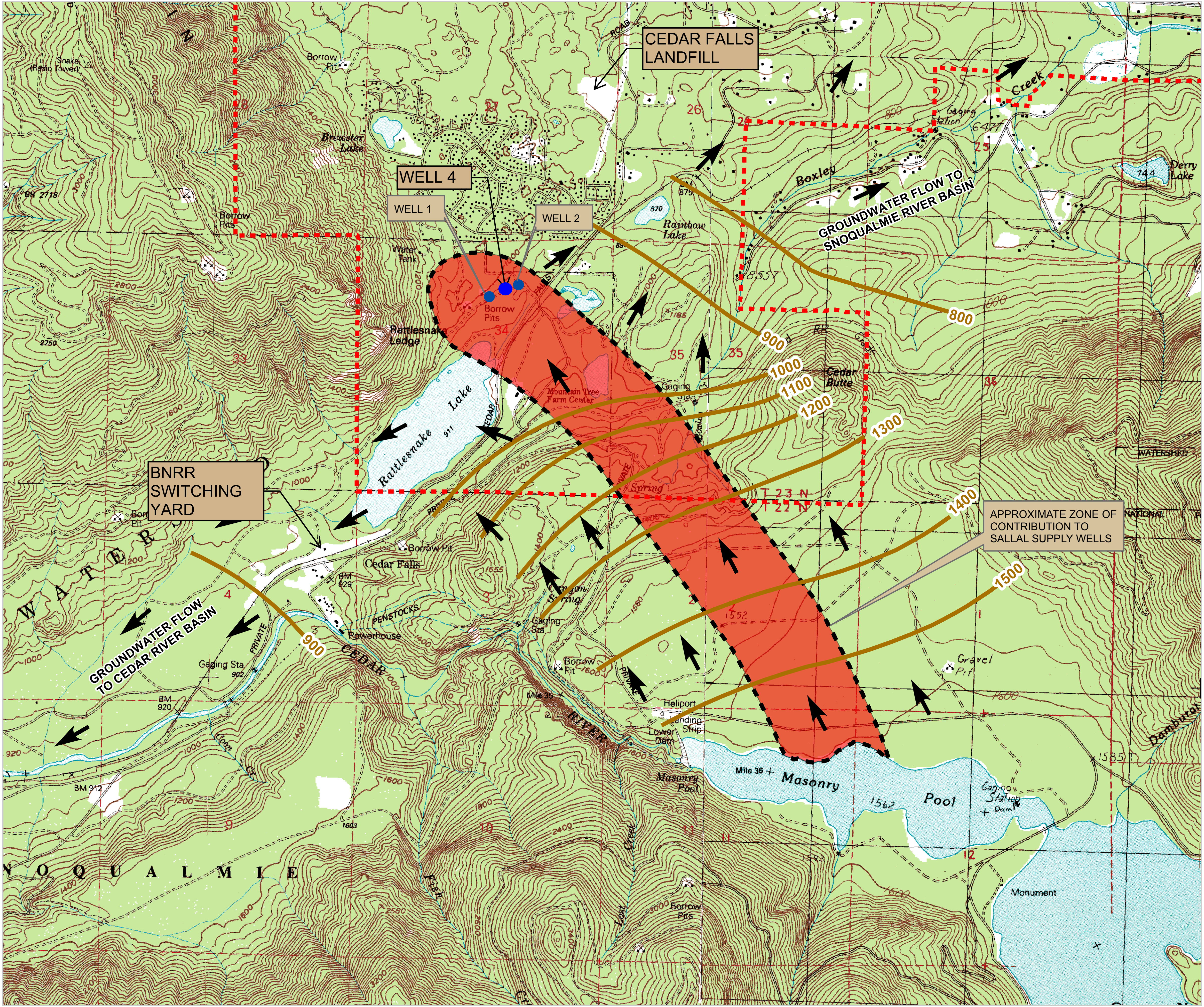

N

0 1,000 2,000 4,000 Feet

The groundwater source for Wells 1, 2 (and now 4) is leakage from the Masonry Pool portion of the Chester Morse Lake into the glacial moraine aquifer system. Approximately 70% to 80% of this groundwater flow is into the Cedar River Basin with 20% to 30% of the groundwater flow into the Snoqualmie River Basin. Rattlesnake Lake is a result of the groundwater recharge into the moraine aquifer system. Only during high levels in Rattlesnake Lake (elevation 905+), does the the lake discharge via surface water through Rattlesnake Ditch to the north (Snoqualmie Basin). During the majority of the time, Rattlesnake Lake discharges via leakage to the the the groundwater system to the south (Cedar River Basin). The capture zone for Sallal Wells 1 and 2 includes potentially a small portion of Rattlesnake Lake and a capture zone that tracks back to the Masonry Pool of the Chester Morse Lake. Travel time from the Masonry Pool to the Sallal Wells is on the order of six months. One-, five- and 10- year time of travel zones for the Sallal wells would include the Chester Morse Lake, the upper Cedar River and the upper reaches of the Cedar River Watershed, respectively.

Source:
Compass Geographics, 1998

LEGEND:

TIME OF TRAVEL ZONES:

- 🟥 6-MONTH TIME OF TRAVEL ZONE
- PROPOSED WELLHEAD PROTECTION AREA
- SALLAL SERVICE AREA

SALLAL WATER ASSOCIATION

WATER SYSTEM PLAN
FIGURE 6-1
WELLS 1, 2 & 4
WELLHEAD PROTECTION AREAS

Gray & Osborne, Inc.
CONSULTING ENGINEERS

M:\Sallal\17462 Sallal WSP\gis\WELLHEAD_WELL_1-2.mxd

ATTACHMENT A

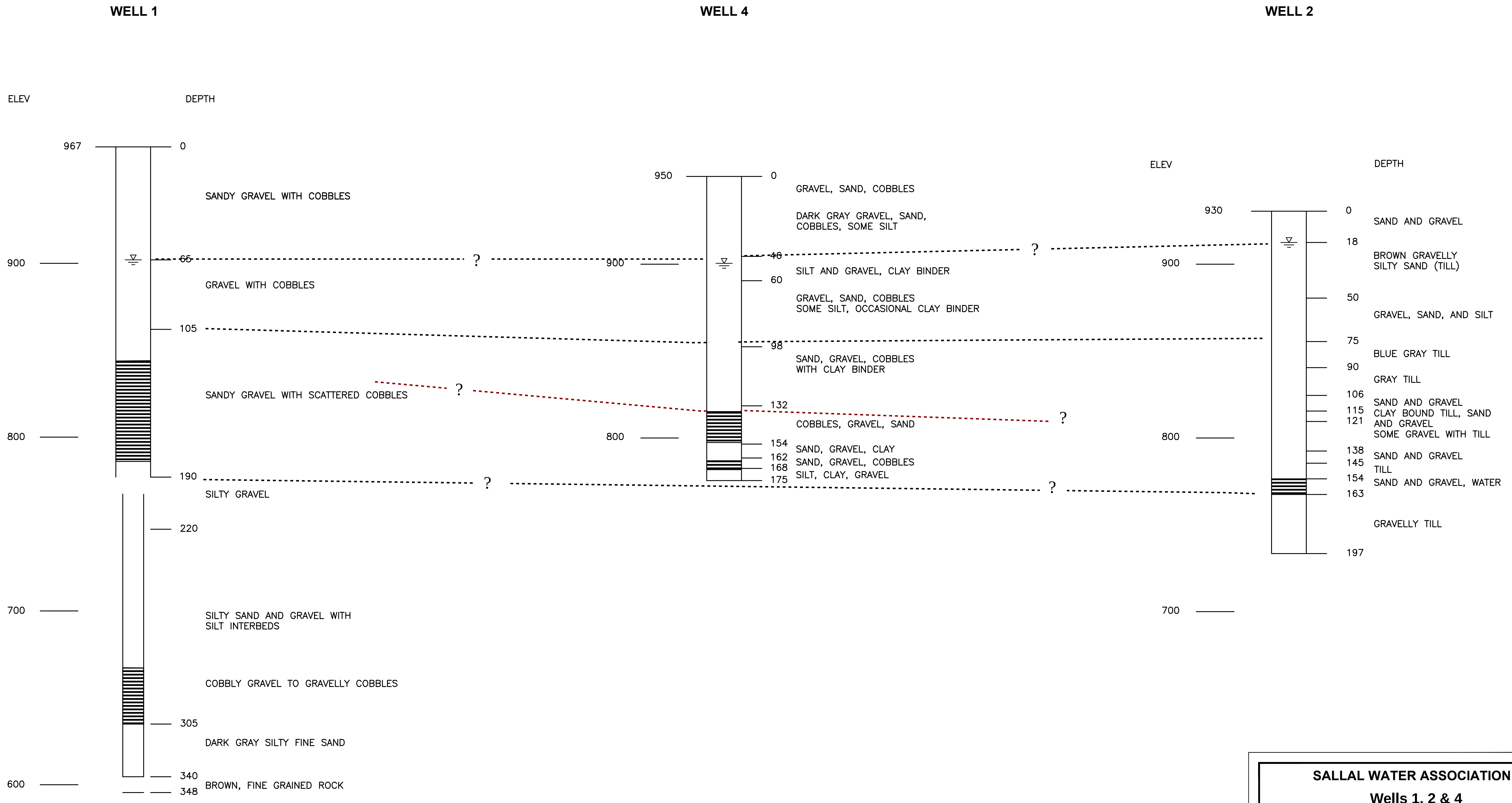

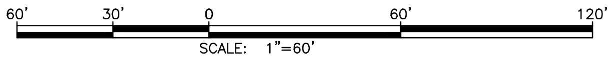

SALLAL WATER ASSOCIATION

Wells 1, 2 & 4

FIGURE 6-2
HYDROGEOLOGIC CROSS SECTION

Gray & Osborne, Inc.
CONSULTING ENGINEERS

M:\Sallal\15455.00 New Supply Well\15455.01 CM\Well Report\Figures\GEO.dwg, 1/9/2019 11:19 AM, WARREN PERKINS

ATTACHMENT A

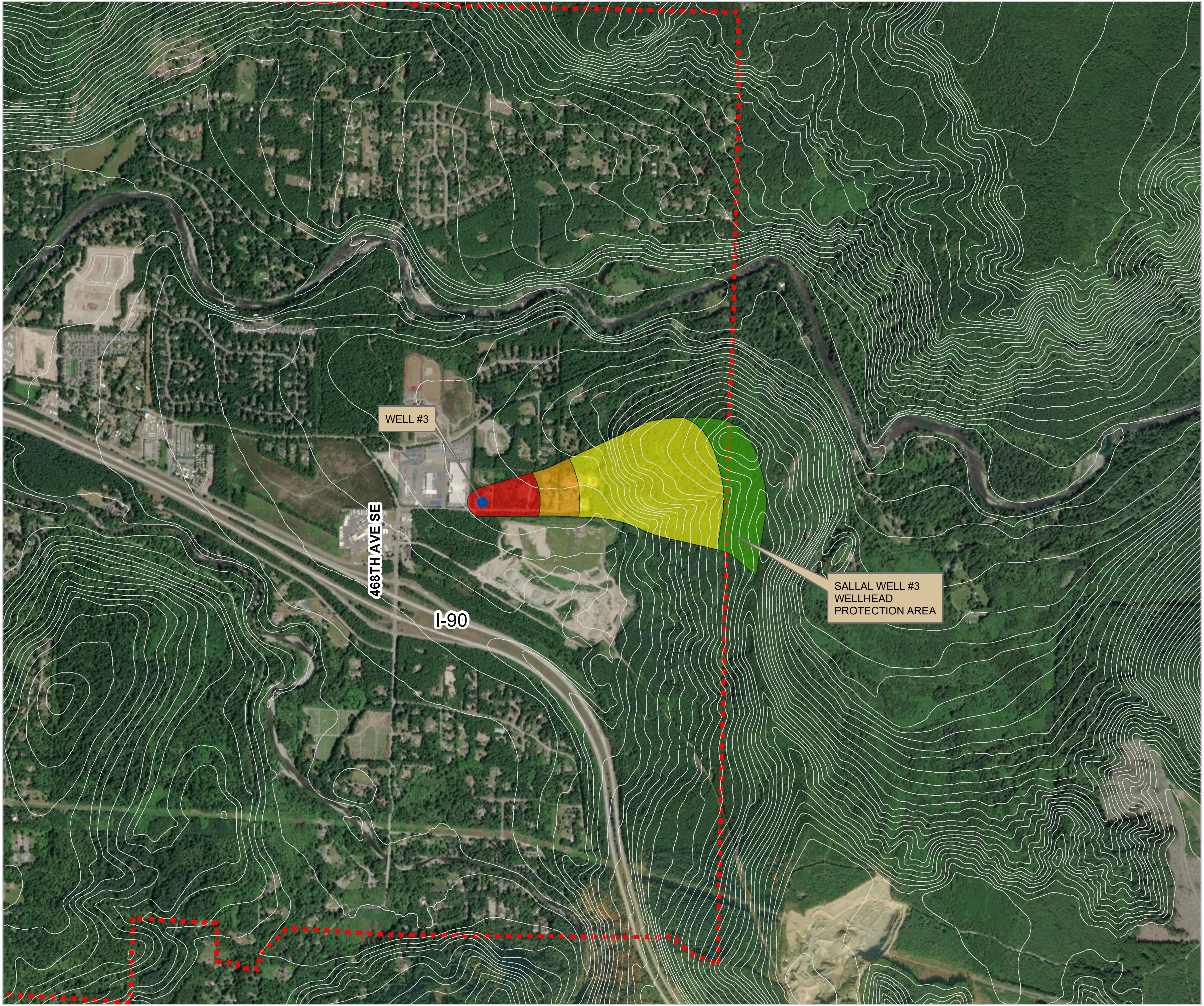

LEGEND:

TIME OF TRAVEL ZONES:

🟥 6-MONTH TIME OF TRAVEL ZONE

🟧 1-YEAR TIME OF TRAVEL ZONE

🟨 5-YEAR TIME OF TRAVEL ZONE

🟩 10-YEAR TIME OF TRAVEL ZONE

⬚ SALLAL SERVICE AREA

Sallal Groundwater
The source area for the Sallal Production Well #3 is the Grouse Ridge Area to the east of the well. This highland and the bedrock core within Grouse Ridge influences the groundwater flow in this region between the glaciofluvial deposits in the Middle and South Fork Snoqualmie Valleys. The groundwater flow is from Grouse Ridge to the west.

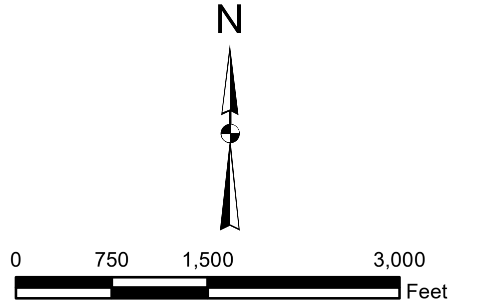

SALLAL WATER ASSOCIATION

WATER SYSTEM PLAN
FIGURE 6-3
WELL #3 WELLHEAD PROTECTION AREA

Gray & Osborne, Inc.
CONSULTING ENGINEERS

M:\Sallal\17462 Sallal WSP\gis\WELLHEAD_WELL3.mxd inclusion of Well 4. Well 4 is situated between Wells 1 and 2 and the WHPA analysis assumed that Wells 1 and 2, combined, were pumping at the existing water right. The water right is not being changed as a result of Well 4; Well 4 provides source redundancy.

The WHPA for Well 3 was also modified slightly based on further hydrogeologic investigations conducted by Hart Crowser related to the potential lower operations of the Grouse Ridge gravel operation. Figure 6-3 shows the WHPA for Well 3.

Analytical modeling is a useful tool for evaluating groundwater flow and understanding the aquifer system and how contaminants may be transported through the system. However, it must be realized that a groundwater model is simply a tool for hydrogeologic analysis and it is rare that a groundwater model can accurately simulate or predict groundwater conditions in all portions of the aquifer system. However, the analytical groundwater modeling technique used to prepare the Sallal Wellhead Protection Areas is more accurate than most of the other available methods commonly used to delineate a WHPA.

POTENTIAL CONTAMINANT SOURCE INVENTORY

An inventory of potential contaminant sources that may impact groundwater within designated Wellhead Protection Areas is an essential element of all Wellhead Protection Plans. Groundwater contamination originates from both point and nonpoint sources. Point sources of contamination are those that can be traced to a specific discharge point such as landfills, underground storage tanks, industrial waste discharge or a transportation spill. Nonpoint sources are those that are attributed to a more widespread release of contamination rather than to a single identifiable location such as general stormwater runoff or agricultural applications of pesticides/herbicides.

The potential contaminant inventory for this WSP was completed through a two step process that included a search of current government database information using a Geographic Information System, followed by a field inspection task to verify the database information and discover previously unrecorded sources. A review of possible contaminant sources in the vicinity of the Sallal wells was conducted in preparation of this plan. The Washington State Department of Ecology Regulated Facility Site Identification services were used to identify all Ecology-regulated sites in the vicinity of the Sallal wells. The search found 9 sites within 1 mile of the Sallal wells. Two of these sites involve potential groundwater contaminants. The sites within 1 mile of the Sallal Wells that involve potential groundwater contaminants are the Cedar Falls Landfill located at 16901 Cedar Falls Road SE, and BNRR Switching Yard Cedar Falls located SE of Rattlesnake Lake and Cedar Falls Road. Both of the sites that involve potential groundwater contaminants are located hydrogeologically downstream of Sallal Wells 1, 2, and 4.

The records used to identify sites of concern include:

> **NPL – National Priorities List.** These sites fall under the EPA's Superfund program, which was established, to fund cleanup of contaminated sites that pose a risk to human health and the environment.
>
> **CERCLIS – Comprehensive Environmental Response, Compensation and Liability Act Information System.** This database contains approximately 15,000 nationally identified hazardous sites that may require cleanup. Last updated October of 2013 and to be replaced By SEMS – Superfund Enterprise Management System.
>
> **RCRIS – Resource Conservation Recovery Act Information System.** This combination of databases provides information on sites which generate, transport, store, treat or dispose of hazardous waste. These databases include corrective actions (CORRATS), Treatment, Storage and Disposal facilities (TSD), and RCRA large and small generators.
>
> **ERNS – Emergency Response Notification System.** This database contains information on release of oil and hazardous substances from spill reports made to EPA, U.S. Coast Guard, and Dept of Transportation.
>
> **LUST – Leaking Underground Storage Tanks**. Information from the state of Washington on leaking underground storage tanks which are one of the major causes of soil and groundwater contamination.
>
> **SWS and SWLF – Solid Waste Sites and Solid Waste landfill Sites.** This database contains information collected at the state and local level providing a comprehensive list of solid waste sites including active and inactive landfills, incinerators, transfer stations, recycling locations and other locations where solid waste is stored, treated or processed.
>
> **SPL and SCL – State Priority List and State Cleanup List.** This is a State of Washington database of sites with known or suspected contamination under the jurisdiction of the Washington Model Toxics Control Act (MTCA).
>
> **WA and TI – Washington State Toxics and Toxics Release Inventory System.** This is a State of Washington database concerning toxic sites and registered releases of toxic compounds at sites within the State of Washington.
>
> Additional information was also obtained through the U. S. EPA Geographic Information Query System. Land use and zoning information was obtained from King County through the King County GIS Technical Resource Center. Land use in Sallal's Service Area ranges from single-family homes on 1/3 to 20+ acre

homesites to industrial. Commercial or potential commercial activities within and on the periphery of the Sallal service area include:

- Truck Stop- major truck repair and fueling facility
- Truck and automobile repair/service
- Gravel pits and gravel operations
- Light and heavy industry and fabrication
- Retail, warehouse and wholesale shops
- Hobby farms and horse ranches /stables

Sallal's sources are in a nearly ideal situation in many respects. Their primary production wells (Wells 1, 2 and 4) are within the City of Seattle Watershed. This is a real advantage in managing a Wellhead Protection Area. The watershed area is already maintained relatively contaminant-free with in-place land-use planning/zoning that will prohibit future industrial or other impacts to the watershed and Sallal's wells. The only potential impacts to this well would occur from spills or contaminants discharged within the immediate Rattlesnake Lake Park area. SPU controls access to the watershed. Rattlesnake Lake recreation area is day use only, no motorized boats are allowed on the lake (minimizes spill risks). Toilet facilities have containment vessels for collection and off-site waste processing.

The capture zone for Well 3 is upgradient of the truck fueling, service center and industrial activities located at Trucktown to the west. The capture zone extends east from Well 3 to Grouse Ridge. Potential future activities which may result in potential sources of contamination include additional residential housing development within the WHPA, forestry practices on Grouse Ridge and the development of the gravel resources on property adjacent to the proposed Sallal Well 3/3A Wellhead Protection Area. The location of mining operations to date appear to be just outside the WHPA.

WELLHEAD PROTECTION PROGRAM MANAGEMENT STRATEGIES

Private residences comprise the largest percentage of land use within all of the Wellhead Protection Areas within Sallal's service area. Residential use presents a low to moderate risk of contamination to the aquifer, provided that homeowners take reasonable care in the use and disposal of household chemicals, and maintain private septic systems and oil tank (if any) in good working order.

The primary management activity of Sallal to minimize groundwater contamination is educational. Residences and businesses within each of the Wellhead Protection Areas have been notified of their inclusion within the WHPA by mail. A copy of the notification letter and an information brochure are included in the Wellhead Protection Plan.

Primarily due to the lack of other potential contamination sources, septic systems have been identified as a potential source of contamination among residential areas within the

Wellhead Protection Area. Under ordinary conditions, septic tanks pose a relatively small risk to groundwater. Potential risks of contamination increase if hazardous materials are discarded through a septic system, if the septic system itself fails, or if conduits like old improperly abandoned wells are adjacent to septic systems, providing a potential mechanism for untreated wastewater to reach deeper aquifer systems.

Under WAC 246-272-155501, between January 1, 1995 and January 1, 2001, all local health departments in Washington State are required to develop and implement an on-site sewage system operation and maintenance program. Sallal will participate and request information from the King County Health Department to monitor the condition of septic systems within their WHPAs.

Currently there are four lots east of Wells 3/3a within the 1-year protection area. Two are owned by a private individual and one is developed with a single-family home approximately 900 feet east of the wells. Each of the lots is 4.5 acres and may not be subdivided under current zoning. The Rainbow Temple owns another undeveloped 4.5-acre lot, the Temple itself another 600 feet further east. The closest septic system is the located on the Edgewick Booster/Well 3 site. It serves a single-family residence. The septic system is to be abandoned and replaced with a new septic system located in the northwest corner of the property as a part of the Sallal Headquarters project, discussed further in Chapter 9.

Commercial and/or industrial operations within the Wellhead Protection Area pose, in general, a greater hazard to aquifers than residential use. Depending on the type of business, releases of hazardous chemicals can result from misuse, improper storage, improper disposal, equipment failure, or other mechanisms. Industrial releases are also likely to involve greater volumes than releases from residential sources. All businesses operating in or near the Wellhead Protection Area were notified by mail of their status with respect to the WHPA boundaries.

CONTINGENCY PLAN FOR ALTERNATIVE SUPPLY

Sallal has developed a Contingency Plan that prioritizes the measures to be undertaken if a well were to become contaminated or water production was disrupted. In the event Wells 1 and 2 become contaminated, production from these wells would immediately be terminated and Well 3 would be brought on line at its maximum rate. The existing interties with the City of North Bend and the Riverbend Homesites Association may be activated under the emergency agreements. Pumping would be required to receive water from these purveyors. This would be sufficient to provide water supplies to approximately 70 percent or more of the Sallal's members, everyone north of the South Fork of the Snoqualmie River. The North Bend intertie would be the more reliable choice for emergency water supply. Sallal would use its generator at the intertie to power the pump and allow transfer of water from North Bend. Existing booster stations would transfer the water east to storage reservoirs. Sallal has a second generator should auxiliary power be required simultaneously at more than one location.

Sallal would immediately have to notify approximately 30 percent of its members south of the south fork of the Snoqualmie River to take actions to secure temporary water supplies. Emergency water trucks could be utilized.

EMERGENCY SPILL/INCIDENT RESPONSE COORDINATION

Spill response planning is an important part of the wellhead protection program and the emergency management plan. Effective spill response requires coordination and communication among the responding agencies and organizations. The following organizations may be involved in a spill response for a Wellhead Protection Area:

- Washington Department of Ecology, (425) 649-7000
- Washington Department of Health, (877) 481-4901
- Washington Department of Transportation, (206) 726-6752
- Washington State Patrol, (425) 649-4370
- King County Fire District No. 38, (425) 392-3433
- King County Emergency Management, (800) 523-5044

A current list of emergency contacts and telephone numbers is maintained by the Sallal operators and manager. In addition, Sallal has agreements with various contractors including excavation, construction and electrical to provide rapid response to Sallal in the event of a crisis. Sallal maintains a 24-hour voice mail on their phone with after hours/emergency phone numbers listed. Emergency response is discussed further in Chapter 8.

CHAPTER 7

DISTRIBUTION FACILITIES DESIGN AND CONSTRUCTION STANDARDS

OBJECTIVE

The objective of this chapter is to document Sallal's design and construction standards to allow Sallal to obtain DOH approval to utilize the alternative review process for construction of new and replaced water distribution facilities. Through this process, a purveyor needs no further approval from DOH for distribution projects.

Non-ordinary projects, reservoirs, booster stations, PRV stations, will require case by case approval from the Department of Health.

Sallal's *Water System Design and Construction Standards* are located in Appendix D.

SYSTEM STANDARDS, POLICIES AND PROCEDURES

Sallal has developed its *Water System Design and Construction Standards* to govern any improvements within the public right-of-way and/or public easements, all improvements required within the proposed right-of-way of new subdivisions and for all improvements intended for maintenance by Sallal. The Standards apply to both Developer and Sallal sponsored projects. The Standards present design and construction standards. If the project is sponsored by a Developer a Developer Extension agreement is required.

PROJECT REVIEW PROCEDURES

Project reports and construction documents are submitted to Sallal for review and approval. Construction documents that do not meet the standards are returned for resubmittal. Construction may not proceed unless Sallal has signed the drawings as approved.

POLICIES AND REQUIREMENTS FOR OUTSIDE PARTIES

The policies, requirements and Developer Extension Agreements are found in Appendix D.

All projects must meet these requirements to be accepted and approved by the Sallal board of trustees.

DESIGN AND CONSTRUCTION STANDARD

All design shall comply with Washington Department of Health *Water System Design Manual (2009),* Sallal's standards and any construction standards imposed by the City of North Bend or King County.

All construction shall be in accordance with the following, including any amendments or revisions:

- Sallal's *Water System Design and Construction Standards*;
- Washington Department of Transportation Standard Specifications for Roadway, Bridge, and Municipal Construction;
- AWWA Standards;
- King County Road Standards, for projects in King County;
- City of North Bend Road Standards, for projects in North Bend.

In the event of a conflict between these standards, the one which provides for a higher level of public safety shall take precedence.

CONSTRUCTION INSPECTION PROCEDURES

Sallal inspects all new construction during and after construction to ensure that projects are constructed in accordance with the standards. This inspection includes witnessing pressure test and disinfection procedures, and collecting water quality samples. As-builts drawings of the final system are to be submitted for each project. Service will not be provided until all requirements are satisfied.

A Construction Completion Report is completed for each project.

CHAPTER 8

OPERATION AND MAINTENANCE PROGRAM

INTRODUCTION

There are two primary objectives for this chapter devoted to system operation and maintenance. The first is to provide documentation of satisfactory water system management operations in accordance with WAC 246-290-100 and 246-290-415. The second is to provide a comprehensive reference of system components, procedures and programs to assist Sallal in its operations, training, and planning activities.

WATER SYSTEM MANAGEMENT AND PERSONNEL

Sallal is governed by a seven member board of trustees. Sallal's staff includes a General Manager, a Water System Superintendent, a Water System operator, and one office employee. Sallal's General Manager is Mr. Ted Stonebridge. The certification of Sallal operations staff is shown in Table 8-1.

CERTIFICATION REQUIREMENTS

Water Works Operator Certification, required under WAC 246-292-050, mandates Washington State Group A public water systems retain in their employment individuals who are certified, by examination, as competent in water supply operation and management. DOH determines the required level and number of certified positions based on the population and the complexity of the water system. Based on the current estimated population of nearly 6,300 discussed in Chapter 2, Sallal is classified as a Group 2 Water System. A Group 2 Water System is required to retain at least one employee certified as a Level 2 Water Distribution Manager (WDM-2). Water systems that are required to develop a cross-connection control program in accordance with WAC-246-290-490 are also required to retain an employee with Cross-Connection Control Specialist certification. Sallal meets all DOH certification requirements.

TABLE 8-1

System Personnel and Certification

Name	Position	Certification
Ted Stonebridge	General Manager	WDM4, CCS
Denny Scott	Water System Superintendent	WDM3, WTPO3, CCS
Tree Bergman	Water System Operator	WDM3, WTPO1, CCS

PROFESSIONAL GROWTH REQUIREMENTS

In order to promote and maintain expertise for the various grades of operator certification, Washington State requires that all certified operators complete not less than three Continuing Education Units (CEU) within each three-year period. Programs sponsored by both Washington Environmental Training Resources Center (WETRC) and the American Waterworks Association (AWWA) Pacific Northwest Subsection, Evergreen Rural Water are the most popular source of CEUs for certified operators in Washington State.

Besides providing CEUs, operator training is an important component in maintaining a safe and reliable water system. At a minimum, all personnel performing water system related duties should receive training in the following areas.

- Confined space
- Trenching and shoring
- Traffic Flagging
- Asbestos cement pipe safety
- Cross-Connection Control

Sallal evaluates CEUs on an annual basis. Each certified employee is responsible for maintaining their certification. Sallal pays for classes needed by the employees to keep current with CEUs.

SYSTEM OPERATION AND CONTROL

MAJOR SYSTEM COMPONENTS

The locations of the major system components are shown on Figure 1-5, the system facilities map. System Operation is summarized in Chapter 1. A brief description of Sallal's facilities and their controls is given in the following sections.

Sallal owns four wells that currently provide all the water used by its customers. Wells 1, 2 and 4 are located within the City of Seattle Cedar River Watershed north of Rattlesnake Lake. Wells 1 and 2, each provide about 750 gpm with 100-hp motors. Well 4 is a redundant well anticipated to come online in early 2020. When operational, Well 4 will become a part of the regular well pumping rotation. Water pumped from these wells supplies approximately 90 percent of the total water system demand. Generally, water flows north from the wells and reservoirs to the distribution system. Water which reaches the 710 Zone travels east and is pumped up to the 793 Zone by the Tanner Booster station and to the northeasterly zones by the Lower Mt Si and River Point booster stations. Water pumped to the east will flow back into the 710 Zone only during high demand events, such as fire or main break.

Well 3 is located at Edgewick Reservoir and booster station site. It supplies the remaining 10 percent of the water supply to Sallal. Typically, it is used to provide source water only to the 793, 883 and 920 Zones. Well 3A is redundant and is not used.

AUXILIARY/EMERGENCY POWER

All well sources are provided with backup auxiliary power. A dedicated generator provides power to Wells 1 and 2, and in the future Well 4. Well 4 is being designed with a discharge rate of 1,200 gpm and a 150-hp motor. The Edgewick booster station generator provides auxiliary power to Well 3. Sallal has a management contract with D Square for both dedicated generators, one for Wells 1 and 2, and one for Well 3/ Edgewick Booster Station. The generators are serviced annually with a complete change of fluids and testing. Both of the generators are automatically started once each week and load tested annually.

Sallal owns and maintains a portable auxiliary generator. This generator is used in the event of a power outage at the Tanner, Lower Mt Si and River Point booster stations. The generator is taken to each station successively to keep the water level in the reservoirs up to a satisfactory level. The generator is started monthly by Salla staff and towed annually to each of the other three booster stations where it is connected to and runs the booster station.

SCADA

Sallal has System Control and Data Acquisition (SCADA) at all of its sites. The Terrell Reservoir, which was vandalized in October 2018, now also has telemetry to it. All reservoir sites have intrusion alarms and sensors as well as water level status in the reservoirs and wells, and pump on/off status for all wells and booster stations.

ROUTINE AND PREVENTIVE MAINTENANCE

Sallal has developed a preventive maintenance (PM) program designed to minimize capital costs, through neglect of infrastructure and yet not be too onerous on Staff. Through a planned PM program, the optimum level of maintenance activities can be provided for the least total maintenance cost. Sallal’s PM program involves defining the tasks to be performed, scheduling the frequency of each task, and then providing the staff necessary to perform the tasks. Sallal maintains an Operations and Maintenance Manual which is updated periodically as needed.

Each water system facility is inspected frequently to verify that each component is operating properly. Table 8-2 indicates the frequency at which Sallal staff visits and checks each of its facilities. During each visit, the site is also checked for damage, vandalism, and intrusion.

TABLE 8-2

Preventive Maintenance Monitoring Schedule

Component	Monitoring Schedule
Sources	
Wells 1,2, 3, 3A, and 4	Inspect daily
Storage Facilities	Two times per week
Booster Stations	Inspect daily
Distribution Facilities	
Water Mains	Dead end mains flushed quarterly, or more frequently if needed.
Hydrants	Flush annually
Pressure Reducing Valves	Inspect weekly

Table 8-3 provides goals for Sallal to meet in terms of its preventative maintenance program.

TABLE 8-3

Preventive Maintenance Programs

Program	Sallal Goal
Valve Exercising	• Locate and operate each water system valve every 3 years.
Hydrant Operation	• Operate and flow each hydrant every 2 years.
Hydrant Maintenance	• Inspection and repair of water system hydrants. Currently performed when time is available or when a hydrant fails to operate properly.
Blow-Off/Flushing	• Operate and flush all blow-offs and hydrants on dead-end water mains annually, or as needed to maintain water quality.
Leak Detection	• Water system leak detection every 5 years by private contractor using leak detection equipment. If system leakage is notices, interim leak detection is performed.
Reservoirs	• 8-year interior inspection of each reservoir with cleaning performed as needed.
Pressure Reducing Valve Maintenance	• Weekly inspection, often times more frequently. • Rebuild each PRV every 5 years on a rotating schedule.
Altitude Valve	• The altitude valve at the Rattlesnake Reservoir is rebuilt every 4 years.

SOURCES

All sources are inspected daily during the work week for any signs of vandalism or equipment failure.

STORAGE FACILITIES

Sallal staff visually inspects each reservoir twice per week looking for abnormal conditions and evidence of unauthorized entry or vandalism. On a yearly basis, staff thoroughly inspect screens, vents, and exterior surfaces of all reservoirs.

Improperly maintained reservoirs can be a cause of contamination in public water systems. This is a result of contaminants entering the reservoir through cracks or openings at the vent, overflow or drain screens. Deteriorating hatch covers and vandalism can also compromise reservoir water quality. Poorly designed and maintained reservoirs can hamper the emergency operation of a water system. If reservoir drains are not functioning properly, it may be impossible to purge a contaminant from the system. Written documentation of reservoir maintenance must be completed with each inspection and repair, and a copy of the report retained on file.

BOOSTER STATIONS

Sallal staff perform a visual inspection of the booster station each workday. The inspection includes a check for leaks, excessive vibration, sound, and heat. Pump runtime logs are maintained at each booster station site.

DISTRIBUTION SYSTEM FACILITIES

Sallal staff operates its hydrants every 2 years. All hydrants that do not operate correctly are bagged until they are fixed.

Dead-end water lines are susceptible to water quality problems and are flushed at least quarterly or more frequently to remove stagnant water and debris which may have been deposited.

Sallal is committed to minimizing the amount of lost water in its distribution system. Sallal has adopted a schedule of completing a leak detection survey of approximately 20 percent of its system every year. Detected leaks are scheduled for replacement or repaired, as necessary. Increased pumping at a booster station helps to isolate the zone(s) in which a leak may be present. If the volume of water pumped increases at a particular station relative to past pumping, that may be indicative of a leak in the zone served.

Meters

Accurate water metering is an essential financial and conservation oriented component of water system infrastructure. A substantial amount of revenue may be lost through inaccurate metering of residential and commercial accounts. The importance of accurate master or source meter readings cannot be over estimated. Without accurate master or source meter readings, the water utility cannot determine lost and unaccounted for water volumes. In 2010, Sallal undertook a project to replace all service meters in its system with drive-by radio read meters. This project was completed in 2012. Since then, the meters have been failing. Sallal has replaced the meters with new Master Meter service meters, 200 meters per year.

Service meters, including all residential and commercial customer meters, should be calibrated and/or replaced according to the following schedule:

1. 3/4-inch and 1-inch meters should be tested every 8 to 10 years and replaced, if necessary. Replacement is recommended if it is cheaper to replace meters than to test and if necessary, repair meters.

2. 2-inch through 4-inch meters should be tested and calibrated every 2 to 4 years.

3. 6-inch and larger meters should be tested and calibrated annually.

MAINTENANCE RECORD SYSTEM

Keeping accurate and up-to-date maintenance records is important for system evaluations and for scheduling preventive maintenance measures. Sallal maintains information on operation and maintenance procedures performed at each booster station and well site. These maintenance records are the precursor to developing an asset management database.

SPARE PARTS INVENTORY

Sallal maintains an inventory of parts and supplies on hand to handle most emergencies and normal operational needs. Sallal has a good relationship with local contractors which allows for quick response and mobilization of equipment in the event of an emergency repair.

OPERATION AND MAINTENANCE MANUALS

The Operation and Maintenance Manuals, containing operating and maintenance literature provided by manufacturers, parts lists, dimension drawings, as-built drawings of the facilities and any other relevant information that are available, are kept at each station, specific to that station.

SAFETY PROCEDURES

An important consideration of any successful maintenance program is the safety of the employees. Sallal maintains its safety program to be in compliance with the Occupational Safety and Health Administration (OSHA) and the Washington State Department of Labor and Industries (WISHA) regulations. The scope of this Plan is not intended to document any form of OSHA or WISHA compliance. The safety program addresses the situations that employees may encounter during the performance of operation and maintenance tasks.

CONFINED SPACES

Water system operation and maintenance staff must periodically enter vaults, and empty reservoirs in the course of their duties. Some of these locations are classified as confined spaces due to their configuration and lack of ventilation. The principle hazards associated with confined spaces are oxygen deficiency, explosions, and toxic gases. The Washington State Department of Labor and Industries (L&I) has established regulations governing entrance into confined spaces in WAC 296-809. The regulations include the completion of a Confined Space Entry Permit, the establishment of Safe Operating Procedures, and the completion of a Confined Space Pre-Entry Checklist prior to entry into the confined space, and notification requirements upon completion of the confined space activities.

ELECTRICAL AND MECHANICAL EQUIPMENT

The presence of electrical and mechanical equipment at Sallal's booster stations and well sites presents hazards to personnel during the performance of operation and maintenance tasks. Precautions must be taken whenever working on or near booster station mechanical and electrical equipment.

Rubber mats should be placed on the floor in front of all electrical control panels and auxiliary generators. When working on any piece of electrical equipment, the operator should ensure that all switches are opened and tagged, all electrical equipment is grounded, and all exposed wire is taped. All portable power tools, extension cords, and lights should be of the three-wire grounding type.

Other safety precautions that should be observed by Sallal personnel are to avoid contact with energized circuits or rotating parts, to avoid bypassing or rendering inoperative any safeguards or protective devices, and to avoid extended exposure in close proximity to machinery with high noise levels.

FIRE HAZARDS

Fires are possible if debris is allowed to accumulate. Precautions should be taken to reduce the possibility of a fire. Oily rags should be kept in tightly sealed metal cans, preferably at a location away from the booster station. All areas should be kept free of clutter or debris, especially if flammable in nature. Gasoline, diesel, and other solvents should only be used in well-ventilated areas, away from sources of ignition. A carbon dioxide type, dry chemical, or foam fire extinguisher should be permanently mounted at each booster station. Fire extinguishers are tagged and checked annually to ensure its operational ability.

EMERGENCY RESPONSE PROGRAM

Water utilities have the responsibility to provide an adequate quantity and quality of water in a reliable manner at all times. To do this, utilities must reduce or eliminate the effects of natural disasters, accidents, and intentional acts. To assist in the effort, water systems serving more than 3,300 people will need to complete an assessment of their risk and resilience by June 30, 2020. The EPA is scheduled to release a guidance document for this assessment in 2019.

The October 2018 vandalism incident at the Terrell Reservoir provided Sallal with a opportunity to assess the “lessons learned” from an emergency event and to improve its emergency response program. Perhaps the biggest challenges, particularly with a small staff, how to best “get the message out” and how to effectively communicate with the public/members once the message is out.

EMERGENCY PROCEDURES

Although is not possible to anticipate all potential disasters affecting Sallal’s water system, formulating procedures to manage and remedy several common emergencies is appropriate.

Water System Personnel Emergency Call-Up List

Sallal maintains a list of emergency contacts for supplies, construction equipment and agencies (Appendix P)

Bacteriological Presence Detection Procedure

Notification procedures for notifying system customers, the local health department, and DOH of water quality emergencies are an important component of an emergency response program. Many public water systems will occasionally detect positive coliform samples, mainly as a result of minor contamination in distribution mains or sample taps, or improper bacteriological sampling procedures. However, the persistent detection of coliforms in the water supply, particularly E. coli or fecal bacteria, may require issuing a public boil water notice to ensure the health and safety of the water customers. This occurred in September 2019. Emergencies such as floods, earthquakes, and other disasters can affect water quality as a result of damage to water system facilities, thereby warranting a boil water order in advance of supply. A sample boil water notice is included in Appendix P. WAC 246-290-320 requires water utilities to follow specific procedures in the event coliform bacteria are detected in the water system. These procedures are outlined in Figure 8-1.

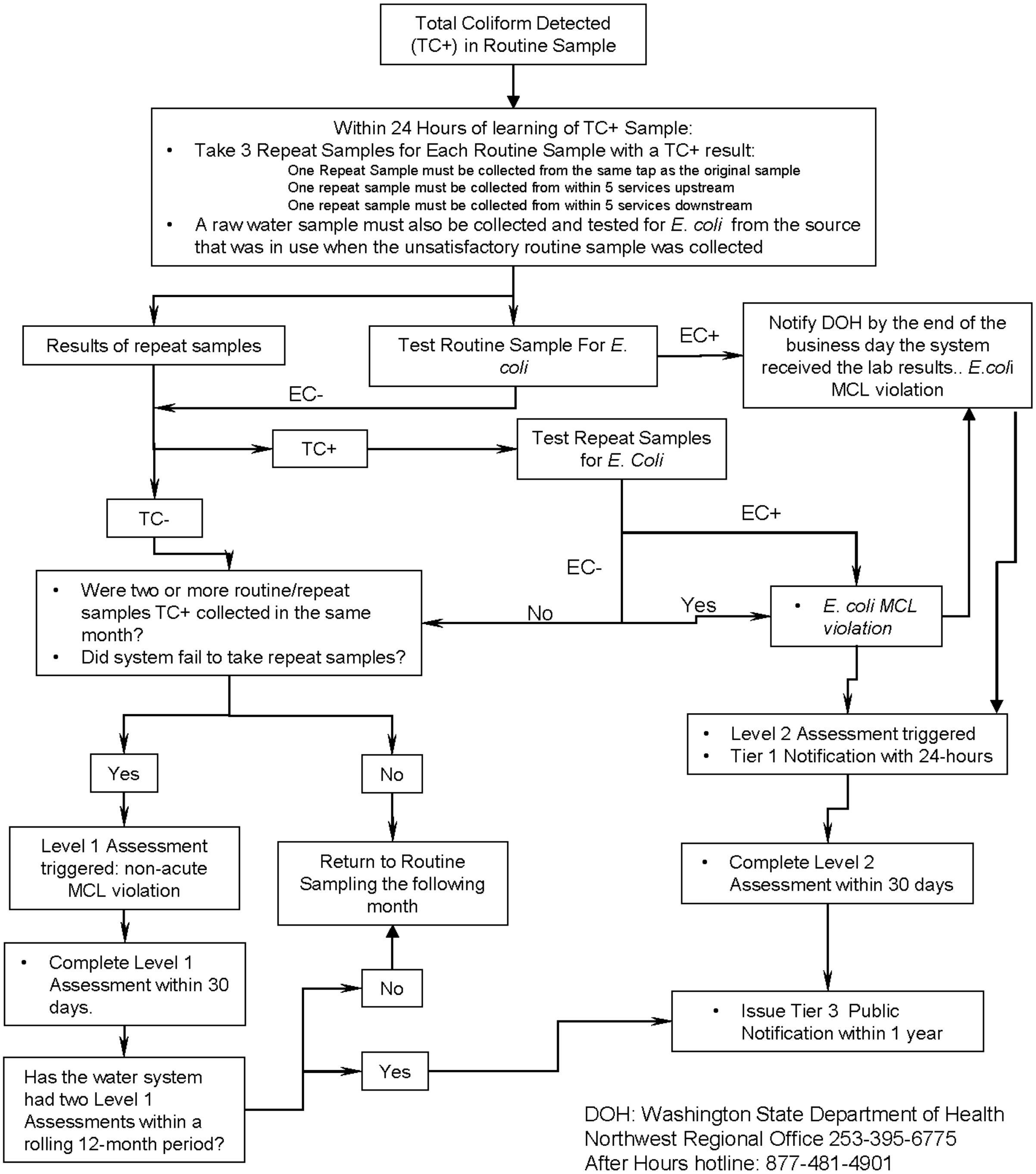

DOH: Washington State Department of Health
Northwest Regional Office 253-395-6775
After Hours hotline: 877-481-4901

FIGURE 8-1

Bacteriologic Detection and Notification Flow Chart

In the event of a bacteriological contamination event and a subsequent boil water order, a challenge for small systems is timely and consistent customer notification. Sallal has the following procedures and mechanisms to inform members of the boil water order and to keep them informed during the event and until the boil water notice is lifted:

- Notification on the Website – Sallal's Office personnel update the website as needed.
- Notification by Email – Sallal has the capacity to send out bulk notification emails to it members. Approximately 65 percent of the members have their email on file with Sallal.
- Notification by News Organizations – A brief factual statement will be prepared for release to local news organizations.
- Reserve 911.
- Social Media (Nextdoor, Facebook).

In addition, the field crew will undertake the following measures to limit the impacted area.

- Close valves if possible to isolate source.
- Repair and or remove source of contamination.
- Flush previously contaminated section and test until free of contamination prior to resumption of use.

If contamination source is at a reservoir.

- Isolate the reservoir from system.
- Inspect vent screens, hatches, and piping to identify source of contamination.
- If reservoir water is contaminated and therefore considered unsuitable for consumption, drain, clean and disinfect reservoir.

VOC/SOC and Inorganic Chemical/Physical Characteristics Detection Procedures

Volatile organic chemicals (VOCs), synthetic organic chemicals (SOCs), inorganic chemicals, and certain physical characteristics are monitored according to WAC 246-290-300. Water quality standards are based on maximum contaminant levels (MCLs) and maximum residual disinfectant levels (MRDLs). WAC 246-290-320 and -480 describe the required protocol following a MCL or MRDL violation. DOH must be notified of the MCL or MRDL violation.

Power Failure

Various types of weather can cause loss of power, such as wind, lightning, freezing rain, freezing snowstorm. Sallal has dedicated auxiliary power at all of its well sources and the Edgewick booster station. Manual transfer switches are installed at Mt. Si, Riverpoint, and Tanner booster stations. These stations may be powered by Sallal's trailer mounted generator.

Severe Earthquake

System Component	Action
Wells: Wells may have lost power	• Repair/manipulate wells as needed to continue supply of water to system. • Operate well manually to evaluate of well damaged. • Pump to waste to examine water for excess turbidity.
Distribution System: Distribution and transmission mains may be broken	• Isolate broken sections and repair. • Notify customers of any shut-off.
Reservoirs: Reservoirs may be leaking or structurally damaged	• Check reservoirs for structural damage. If structural damage apparent isolate reservoir, drain if necessary. • Monitor water level for signs or rapid drawdown or low water level.
Booster Station	• Check booster station for damage to mechanical or electrical systems. Test booster pumps for operation. • Install spare booster pumps and replace parts from Sallal inventory as necessary.

Severe Snowstorm

Heavy snowfall may bring motor vehicle traffic to a standstill. Employees may not be able to reach problem area.

System Component	Action
Distribution System: Transportation to monitor system and make repairs will be limited	• Have chains and other snow gear ready for maintenance equipment and vehicles • Valve locations should be kept current and made available for maintenance personnel
Reservoirs: No immediate effect. Snow may prevent access.	• Vehicle access not possible for majority of reservoirs.

High Water and Flooding

Heavy snow melt and/or rains cause the water level to rise and reach a flood level.

System Component	Action
Reservoirs and Booster Stations: No effect. Reservoirs and booster stations are above flood level	No action is necessary

Contamination of Water Supply

In the event Wells 1 and 2 become contaminated, production from these wells would be immediately terminated and Well 3 would be brought on line at its maximum rate. The existing interties with the City of North Bend and the Riverbend Homesites Association may be activated under the emergency agreements. Pumping would be required to receive water from these purveyors.

CROSS-CONNECTION CONTROL PROGRAM

Sallal has implemented a Cross-Connection Control Program as required by Washington State Regulations WAC 248-54-85. Sallal's Cross-Connection Control Program is included in Appendix E. Sallal is responsible for ensuring that all actual and potential cross-connections in their service area are eliminated or protected by approved methods or devices. In order to do so, the following steps are taken by Sallal.

- Require installation of premises isolation on new connections.

- Surveillance and regulation of backflow prevention assemblies on premises where cross-connections exist, or are likely to occur.

TABLE 8-4

High Hazard Cross-Connections

Agricultural (farms and dairies)
Beverage bottling plants
Car washes
Chemical plants
Commercial laundries and dry cleaners
Premises where both reclaimed water and potable water are provided
Film processing facilities
Food processing plants
Hospitals, medical centers, nursing homes, veterinary, medical and dental clinics, and blood plasma centers
Premises with separate (i.e., dedicated) irrigation systems that use the purveyor's water supply and with chemical addition*
Laboratories
Metal plating industries
Mortuaries
Petroleum processing or storage plants
Piers and docks
Radioactive material processing plants or nuclear reactors +
Survey access denied or restricted
Wastewater lift stations and pumping stations
Wastewater treatment plants +
Premises with an unapproved auxiliary water supply interconnected with the potable water supply

Low health risk hazards may include but are not limited to the following: Irrigation systems; Swimming pools or spas; Ponds; and Boilers.

INSPECTION PROCEDURE

Backflow prevention assemblies are required to be inspected and tested annually by a Department of Health certified backflow assembly tester.

CHAPTER 9

CAPITAL IMPROVEMENT PROGRAM

INTRODUCTION

This chapter presents the Capital Improvement Plan (CIP) for the 10- and 20-year planning periods. Recommended water system improvements and associated costs, along with scheduling information is presented in the following sections according to analyses, identified deficiencies, and recommendations identified in earlier chapters of this plan. For the proposed projects identified in this chapter, preliminary cost estimates are provided in Appendix J. The costs associated with these projects include construction, administrative and engineering costs (25%), and a contingency factor (20%). The project costs are in 2019 dollars.

In the future other projects may arise which are not identified as part of Sallal's CIP. Such projects may be deemed necessary for ensuring water quality, preserving emergency water supply, accommodating transportation improvements proposed by other agencies, or addressing unforeseen problems with Sallal's water system. Due to budgetary constraints, the completion of these projects may require that the proposed completion dates for projects in the CIP be rescheduled. Sallal retains the flexibility to reschedule projects, as best determined by Sallal when new information becomes available for evaluation. Each capital improvement project should also be reevaluated to consider the most recent planning efforts, as the proposed completion date for the project approaches.

10-YEAR CAPITAL IMPROVEMENT PLAN

Table 9-1 summarizes the proposed capital improvement projects for the 6-year planning period. Each project is discussed further in the paragraphs below. Figure 9-1 shows the locations of proposed 10-year capital improvements. Rate impacts associated with capital project financing are discussed in Chapter 10.

SOURCE

S-1 –Well 4 (New Well at Rattlesnake)

An additional well is needed to ensure redundancy of source in case one well were to fail due to a pump failure or a physical reduction in production occurs. A new well, Well 4, was drilled in the fall of 2018 and was tested at 1,200 gpm. Permits and approvals have been received from King County to equip the well. The well is anticipated to come online in early 2021.

Estimated project cost is $1,091,000.

S-2 – Intertie with North Bend

Sallal and North Bend are negotiating a potential purchase and sale of water to each other, in accordance with the water right for North Bend's Centennial well. If those negotiations are successful Sallal will need to build infrastructure including booster station to receive water from North Bend. The booster station will pump into the Sallal system. Design is assumed for 2023 and construction in 2025, but a project schedule cannot be developed unless and until North Bend and Sallal reach an agreement.

Estimated project cost is $830,000.

S-3 – Well 2 Variable Frequency Drive

A variable frequency drive (VFD) motor starter will be replace the soft starter at Well 2. The existing starter is old and parts are difficult to find. A new VFD will allow for flexibility in Sallal's pumping regime so that it may fully utilize its instantaneous water right. The project is planned for 2022.

Estimated project cost is $65,000.

WATER QUALITY (DISINFECTION)

WQ-1 – Disinfection Facilities

Installation of permanent disinfection facilities at each source.

Estimated project cost is $150,000 (three at $50,000 each).

WQ-2 – 4-Log Disinfection Well 2

Installation of oversized water main to provide CT of 6 for Well 2.

Estimated Project cost is $252,000.

STORAGE

ST-1 – Rattlesnake Reservoir 2

Currently, Sallal is deficient in storage. A new 240,000-gallon Mt. Baker silo Reservoir is scheduled to be operational in the spring of 2021. Permits and approvals have been received from King County. Approval has been received by WDOH.

Estimated project cost is $1,124,000.

ATTACHMENT A

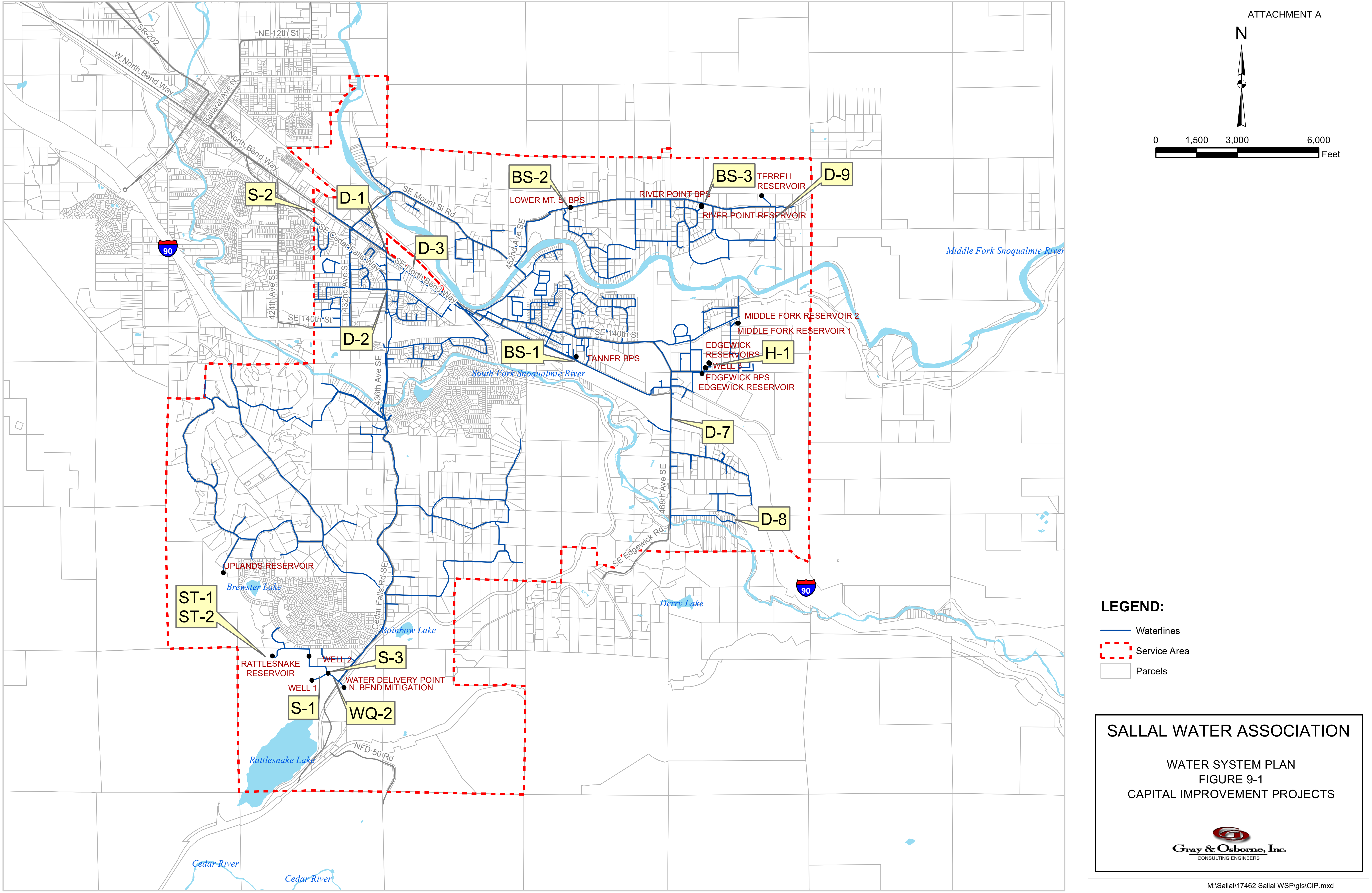

SALLAL WATER ASSOCIATION

WATER SYSTEM PLAN
FIGURE 9-1
CAPITAL IMPROVEMENT PROJECTS

Gray & Osborne, Inc.
CONSULTING ENGINEERS

M:\Sallal\17462 Sallal WSP\gis\CIP.mxd

ST-2 – Rattlesnake Reservoir 3

A third Mt. Baker silo reservoir is included in the CIP, also at 240,000 gallons. The timing of this reservoir is assumed for 2024. The largest standard diameter Mt. Baker Silo reservoir is 30 feet. If Sallal and North Bend reach an agreement to buy and sell water a larger diameter steel reservoir will likely be needed.

Estimated project cost is $1,066,000.

BOOSTER STATION

The installation of flow meters at each booster station allows for better tracking of water use and potentially will help locate the area (zones) of system leaks, for example by seeing an increase in water pumped.

BS-1 – Tanner Booster Station

The Tanner Booster Station will be modified to include a magnetic flow meter. The project is anticipated in 2020.

The estimated project cost is $35,000.

BS-2 – Lower Mt. Si Booster Station

The Lower Mt. Si. Booster Station will be modified to include a magnetic flow meter and to provide SCADA communication to the sites. The project is anticipated in 2022.

The estimated Project cost is $40,000.

BS -3 - River Point Booster Station

The River Point Booster Station will be modified to include a magnetic flow meter and to provide SCADA communication to the sites. The project is anticipated in 2022.

The estimated Project cost is $40,000.

HEADQUARTERS

H-1 – New Headquarters (Office/Shop)

Sallal currently rents the space for its office and shop. The landlord has indicated that Sallal’s rent will not be renewed past 2021. Sallal must move. Sallal has submitted for a Conditional Use permit on property it owns in King County; the same parcel as Well 3. Sallal is planning to construct a new office and shop on the parcel to provide a long-term home for the Association. Design of the building is assumed to occur in 2019 with construction occurring in 2020 and 2021.

The estimated Project cost is $4,740,000.

DISTRIBUTION

D-1 – Water Main Replacement 436th Avenue SE and North Bend Way Roundabout

Replacement of 8-inch asbestos concrete water main under a proposed roundabout with 12-inch ductile iron water main. Upsize helps to eliminate an east-west hydraulic constraint with the system.

Estimated Project Cost: $200,000.

D-2 – Water Main Replacement 436th Avenue SE and SE 136th Street Roundabout

Replacement of 8-inch asbestos concrete water main under a proposed roundabout with 12-inch ductile iron water main. Upsize as the water main is the main supply line from the Rattlesnake sources and reservoirs.

Estimated Project Cost: $206,000.

D-3 – Water Main Replacement Tanner Road - 436th to Sallal Office

Replacement of 6-inch asbestos concrete water main on Tanner Road with 12-inch ductile iron water main. Upsize helps to eliminate an east-west hydraulic constraint with the system. Connects to project D-2 at 436th Avenue SE and to 10-inch water main at Sallal Office driveway. If there is no connection to North Bend, the water main is assumed to be 8-inch diameter.

Estimated Project Cost: $780,000.

D-4 – Sampling Stations

Sallal will continue to install sampling stations for bacteriological sampling. Proper sampling and sampling sites are critical to Sallal remaining a non-chlorinated system.

Estimated Annual Project Cost: $15,000, for 3 years

D-5 – Annual Meter Replacement

Sallal will continue to replace service meters on a 10-year rotation or sooner if obviously broken or not readable. Batteries on the radio read meters will be replaced per manufacturer's recommendations, or sooner if needed.

Estimated Annual Project Cost: $30,000, for 10 years

D-6 – PRV Station Improvements

Sallal will continue to replace/upgrade its PRVs and PRV vaults throughout the system to improve reliability and to improve ease of access. Sallal has approximately seven roll seal PRVs. The PRVs will be replaced with hydraulically operated globe valve PRVs as budget allows. Vault lids will be replaced to improve ease of access to the vaults. The installation of low pressure shut-off and check valve pilot systems on existing PRVs at strategic locations will be assessed with the intent to improve system resiliency.

Estimated Annual Project Cost: $25,000, for 5 years

D-7 – Edgewick Road Water Main Replacement

This project replaces 2,400 LF of existing 8-inch AC water main with a new 12-inch water main along Edgewick Road (468th Avenue SE), between North Bend Way and SE 153rd Street, approximately 2,400 feet. This project will not require any additional land or easements. This project will provide fire flow to the developments south of I-90.

Estimated project cost is $1,393,000.

D-8 – Cascade East Water Main

Two long, dead end water mains currently serve the homes located south and east of SE 153rd Street and 468th Avenue SE. The fire flow availability near the end of these water mains is limited due to high head losses. This project consists of installing approximately 350 linear feet of water main along SE 159th Street to connect these two dead ends near the end of SE 160th Street. This will improve the available fire flow throughout the area and improve water quality by eliminating two long dead end water mains.

Estimated Project Cost: $256,000.

D-9 – Terrell Water Main

This project improves fire flow in the vicinity of the Terrell reservoir zone on 480th Avenue SE. The area is served by a 6-inch water main that cannot provide 1,000 gpm fire flow, though it can provide fire flow per the County standard of 500 gpm. Approximately 1,300 feet of 6-inch PVC water main will be replaced by 8-inch ductile iron water main.

Estimated Project Cost: $571,000.

D-10 – River Point Water Main

This project improves pressure and fire flow west of the River Point Reservoir and Booster Station by extending an 8-inch water main approximately 1,000 feet to the west from the Terrell Zone on the Mt. Si Road.

Estimated Annual Project Cost: $492,000.

D-11 – Annual Water Main Replacement

Much of Sallal's distribution system is approaching 50 years old. With the exception of recently placed pipe, the distribution system is composed of asbestos cement (AC) pipe and relatively low working pressure PVC pipe. During the 20-year planning horizon, the Water Association will begin a main replacement program based upon segments of waterline identified as having a higher incident of repairs as well as being undersized pipe. This work is assumed to occur in years when other large distribution projects are not occurring and will not begin until 2022 due to the near-term capital improvements scheduled.

Estimated Annual Project Cost: $150,000.

ADDITIONAL PROJECTS

Additional projects that impact the entire system include the acquisition of new trucks to replace the existing trucks ($50,000) and a small excavator to allow Sallal staff to complete small projects in house ($30,000).

Table 9-1 provides a summary of the identified projects. The location of the projects is shown on Figure 9-1. Table 9-1 presents the projects both with and without a connection to North Bend. If there is no connection to North Bend, Sallal's growth is capped and thus the capital project list is slightly different than with the connection.

The locations of the projects are presented on Figure 9-1.

TABLE 9-1

10-Year Capital Improvement Projects

		Infrastructure Needed	Location	Type	Year	Est. Cost (2018 $) without NB	Est. Cost (2018 $) with NB
1	System	Buy Back Unused and Purchased GFCs	Stringfellow		2019	$633,438	$633,438
2	WQ-1	Chlorine (Disinfection) Systems	Three well total	Disinfection	2020	$150,000	$150,000
3	System	Water System Plan		Planning	2019	$65,000	$65,000
4	H-1	Office/Warehouse Facilities – Design	Edgewick	Permits	2019	$639,000	$639,000
5	WQ-2	CT Water Main	Well 2	Water Main	2020	$272,000	$272,000
6	S-2	North Bend Contract (Prof Serv)	North Bend	GFC	2020	$0	$30,000
7	D-1	436th at NB Way RAB	NB Way	Water Main	2020	$200,000	$200,000
8	D-2	436th at SE 136th Street	436th Avenue SE	Water Main	2020	$206,000	$206,000
9	S-1	Well 4 Equipping (New Rattlesnake Well)	Rattlesnake	Well	2020	$1,091,000	$1,091,000
10	ST-1	Rattlesnake Reservoir 2	Rattlesnake Ridge	Storage	2020	$1,124,000	$1,124,000
11	BS-1	Flow Meter at Tanner BPS	Tanner	Meter	2020	$35,000	$35,000
12	S-2	Connection between NB/SWA – Design	North Bend	BPS & WM	2023	$0	$83,000
13	H-1	Office/Warehouse Facilities – Construction	Edgewick	Construction	2020	$4,271,000	$4,271,000
14	BS-2	Flow Meter and SCADA at Lower Mt. Si BPS	Lower Mt. Si	SCADA	2021	$40,000	$40,000
15	System	Replace Trucks	Various	Vehicles	2021	$50,000	$50,000
16	S-2	Connection between NB/SWA	North Bend	BPS & WM	2025	$0	$837,000

TABLE 9-1 – (continued)

10-Year Capital Improvement Projects

		Infrastructure Needed	**Location**	**Type**	**Year**	**Est. Cost (2018 $) without NB**	**Est. Cost (2018 $) with NB**
17	BS-3	Flow Meter and SCADA at RP BPSi	River Pt.	SCADA	2022	$40,000	$40,000
18	S-3	VFD Well 2	Rattlesnake	Well	2022	$65,000	$65,000
19	D-3	Tanner Road – 436th to Sallal Office	Tanner Road	Water Main	2023	$702,000	$781,000
20	System	Small Track Hoe with Trailer	Various	Equipment	2023	$30,000	$30,000
21	ST-2	Rattlesnake Reservoir 3	Rattlesnake Ridge	Storage	2024	$1,066,000	$1,990,000
22	D-4	Sampling Stations (3)	Various	Distribution	3-year Budget	$45,000	$45,000
23	D-5	Annual Meter Replacement	Various	Distribution	10-year Budget	$300,000	$300,000
24	D-6	PRV Station upgrades	Various	Distribution	5-year Budget	$125,000	$125,000
25	D-7	Edgewick Road	468th Avenue SE	Distribution	2028	$1,393,000	$1,393,000
26	D-8	Cascade East Water Main	793 Zone	Distribution	2029	$256,000	$256,000
27	D-9	Terrell Water Main	480th Avenue SE	Distribution	2030	$571,000	$571,000
28	D-10	River Point Water Main	Mt. Si Road	Distribution	2031	$492,000	$492,000
29	D-11	Watermain Replacement – Budget	Various	Distribution	4-year Budget	$600,000	$600,000
						$14,366,438	**$16,319,438**

All costs are in $1,000 and in 2018 dollars.

CHAPTER 10

FINANCIAL PROGRAM

OBJECTIVE

The objective of this Chapter is to analyze Sallal's total costs of providing water service, review the current rate structure to ensure that the current or proposed adjusted rates are adequate to cover the costs of operation and maintenance, and ascertain Sallal's financial capability to implement the 10-year Capital Improvement Plan outlined in Chapter 9.

FINANCIAL STATUS

WATER RATES

Sallal's customers are billed based on metered water usage. Table 10-1 shows the water rate schedule for the residential, irrigation, wholesale, and all other customers as of January 1, 2019. Appendix K presents Sallal's Fee Schedule.

TABLE 10-1

Monthly Water Charge (Effective January 2019)

Residential and All Other Usage (1)		**Rate ($/CCF)**
CCF	**gpd**	
1–500 cubic feet	0–125	$2.48
501–800 cubic feet	125–199	$2.92
801–1,500 cubic feet	199–374	$3.75
1,501–3,000 cubic feet (2)	374–748	$4.51
3,001–7,000 cubic feet	748–1,745	$11.26
>7,000 cubic feet	>1,745	$22.55
Base Fee		$7.86 – 5/8″ meter
Amortization Fee		$11.62 – 3/4″ meter
Irrigation Usage		
1–500 cubic feet		$4.51
501–800 cubic feet		$4.97
801–1,500 cubic feet		$6.77
1,501–3,000 cubic feet		$8.58
3,001–7,000 cubic feet		$11.26
>7,000 cubic feet		$22.55
Wholesale Usage		
All		$2.30

(1) Excludes irrigation and wholesale.

(2) Non-residential rate is flat at $4.51/CCF above 1,500 CCF.

SYSTEM MEMBERSHIP AND CONNECTION FEES

Membership Fees are paid at the time of purchase of a Membership. Purchase of a membership entitles the new member to receive a Certificate of Water Availability for the number of ERUs requested. As meters are requested the fees presented below in Table 10-2 are paid, per meter, in order to receive the water meter(s). In addition to the fees below engineering review fees are required.

TABLE 10-2

New Membership Fees

	Meter Size			
Infrastructure Fees	5/8″	1″	1-1/2″	2″
General Facilities	$17,711	$44,278	$88,555	$141,688
Multiplier(1)	1	2.5	5	8
Meter Installation	$1,000	$1,000	$1,000	$1,000
Administrative Fee	$500	$500	$500	$500
Total New Member and Connection Fee	**$19,211**	**$45,778**	**$90,055**	**$143,188**

(1) Multiplier is based on meter flow factors published by the AWWA.

FINANCIAL STATUS OF EXISTING WATER UTILITY

This section reviews past revenues and expenses in order to analyze the financial health of the existing system and to provide estimates of the baseline cash flows for budget projections.

HISTORICAL OPERATING REVENUES AND EXPENSES

This section presents historical revenues and expenses for the years 2015 to 2019. 2019 revenues and expenses are based upon anticipated end of year totals. The historical revenue and expense data are shown in Tables 10-3 and 10-5, respectively. Sallal tracks expenses by both operational and administrative accounts.

TABLE 10-3

Historical Operating Revenues 2015–2018

Operating Revenues	2015	2016	2017	2018	2019
Water Volume Revenue	$629,847	$562,410	$682,465	$716,890	$770,095
Base Fee Revenue	$137,003	$152,159	$168,835	$170,338	$182,677
Base Fee WRA	$124,288	$120,759	$162,171	$170,651	$183,285
Credit Card Convenience Fee	$1,943	$2,282	$2,282	$2,669	$6,152
Cross-Connection Charge	$7,710	$8,141	$8,141	$9,105	$9,506
41000 – Miscellaneous Fees	$96,717	$91,851	$111,302	$132,956	$131,311
PRVs, Meters, and New Installations	$19,715	$36,051	$47,350	$26,937	$0
Administration Fee	$6,664	$16,483	$22,500	$14,500	$0
Engineering Fee	$500	$0	$0	$9,543	$0
WRA Office	$43,725	$4,316	$26,246	$16,915	$0
Truckstop Well	$2,347	$1,421	$1,448	$1,619	$17,812
Interest Income	$2,223	$7,008	$2,740	$8,348	$9,329
Rental Income	$13,453	$14,020	$13,997	$14,854	$14,373
Miscellaneous Income	$9,770	$9,468	$0	$14,045	($286)
Total	**$1,095,905**	**$1,026,369**	**$1,249,477**	**$1,309,370**	**$1,324,254**

TABLE 10-4

Historical Operating Expenses

Operating Expenses	2015	2016	2017	2018	2019
Contracted Engineering Services	$6,529	$21,733	$35,868	$48,450	$73,354
Generator Maintenance Contract	$3,106	$3,997	$3,920	$6,156	$5,466
Transfer to Operational Reserves	$100,000	$134,808	$73,693	$75,000	$75,000
Employee Benefits	$50,118	$46,604	$53,244	$47,863	$83,664
Insurance Expense	$0	$0	$0	$0	$0
Operations and Maintenance	$77,240	$111,649	$86,653	$93,469	$163,961
Permits, Inspections	$7,844	$6,672	$5,026	$10,056	$16,120
Professional Fees	$550	$4,637	$3,360	$0	$0
Salaries and Payroll Tax	$168,346	$201,839	$200,320	$203,938	$323,161
Utilities	$74,684	$66,134	$59,859	$72,654	$71,201
Retirement Expense	$2,871	$4,158	$10,297	$29,597	$30,840
Travel and Meetings	$1,245	$853	$1,068	$2,148	$1,484
Subtotal Water Distribution	**$492,534**	**$603,084**	**$533,308**	**$589,331**	**$844,251**

TABLE 10-5

Historical Administration Expenses

	2015	2016	2017	2018	2019
Transfer to Capital Reserves					
Board of Trustee Stipends	$10,300	$13,100	$11,500	$17,300	$17,200
Employee Benefits	$58,683	$51,643	$51,585	$13,366	$15,602
Insurance	$22,107	$24,932	$30,750	$29,098	$68,000
Membership Refunds	$21,487	$463	$1,643	$1,042	$778
Miscellaneous Expense	$11,610	$17,877	$4,514	$17,474	$10,239
61800 –·Office Expense	$38,435	$49,416	$53,662	$50,871	$63,813
Prof. Fees – G&A	$67,997	$87,299	$79,959	$179,726	$158,833
Rent/Mortgage	$44,429	$41,828	$46,388	$48,260	$49,010
Rental Utilities	$0	$0	$0	$0	$0
Retirement expense	$12,653	$13,767	$10,226	$10,778	$11,434
Salaries Expenses	$139,066	$149,695	$122,721	$76,391	$75,432
Taxes – Payroll	$23,487	$19,572	$33,079	$40,910	$31,963
Taxes – Business; NB Utility; Real Estate	$53,113	$44,582	$56,870	$84,221	$95,919
Taxes and Minor Expenses	$17,572	$20,212	$19,311	$17,454	$22,900
Subtotal General and Admin.	**$520,939**	**$534,386**	**$522,208**	**$586,891**	**$621,123**

Table 10-6 presents the year end fund balance summaries.

TABLE 10-6

Historical Revenue and Expenses – Year End Fund Balances

	2015	2016	2017	2018	2019
Begin Year	**$500,000**	**$582,432**	**$471,332**	**$665,293**	**$798,441**
Revenue	$1,095,905	$1,026,369	$1,249,477	$1,309,370	$1,324,254
Expense	$1,013,473	$1,137,469	$1,055,516	$1,176,222	$1,465,374
Net Income	$82,432	($111,100)	$193,961	$133,148	($141,120)
End of Year Balance	**$582,432**	**$471,332**	**$665,293**	**$798,441**	**$657,321**

PROJECTED EXPENSES, REVENUES, AND RESERVES

Projected growth in new connections/ERU and water demand is required to estimate revenue and expenses. Chapter 2 projects the estimated population growth rate within the service area.

Table 10-7 presents the factors upon which future costs are based.

TABLE 10-7

Projection Factors Per Year

Cost of Living Adjustment	3.0%
Interest on Fund Balance	1.0%
Taxes	5.0%
Insurance	5.0%
Inflation	3.0%

PROJECTED OPERATIONS FUND

Tables 10-8, 10-9, and 10-10 present the projected future operational revenue and expense. Chapter 2 evaluates Sallal's capacity for additional ERU to connect to the system. Based upon that estimate there is sufficient capacity through 2033 before connections will be curtailed. The financial projections below are through the year 2029 thus the impact of a potential curtailment of new connections is not shown in the operational tables.

The baseline for these projections is the budget for 2019. These projections were determined based upon historical amounts. planned spending. Future operational revenue is estimated based upon growth in the system and rate increases. Future expenses are projected based on a review of the historical expenses and revised as needed for specific line items. Individual factors presented in Table 10-7, and growth, are applied to each line item to project expense.

Whether or not Sallal connects to North Bend impacts the capital improvement plan. Some of the projects presented in Chapter 9 will not be needed if there is no connection to North Bend. This is discussed later in this chapter.

TABLE 10-8

Projected Operational Revenue

	2020	**2021**	**2022**	**2023**	**2024**	**2025**	**2026**	**2027**	**2028**	**2029**
Assumed Rate Increase	8.0%	8.0%	5.0%	5.0%	5.0%	5.0%	2.0%	2.0%	2.0%	2.0%
Assumed Growth Rate	4.4%	3.0%	1.9%	1.6%	1.6%	1.5%	1.6%	1.5%	1.5%	1.5%
Water Volume Revenue	$750,000	$832,500	$889,943	$948,679	$1,011,292	$1,077,026	$1,115,799	$1,154,852	$1,195,272	$1,237,107
Base Fee Revenue	$182,700	$202,797	$216,790	$231,098	$246,350	$262,363	$271,808	$281,321	$291,167	$301,358
Base Fee WRA	$184,400	$199,152	$209,110	$219,566	$230,544	$242,071	$246,912	$251,850	$256,887	$262,025
Credit Card Convenience Fee	$5,000	$5,150	$5,248	$5,334	$5,420	$5,504	$5,590	$5,676	$5,760	$5,844
Cross-Connection Charge	$9,000	$9,270	$9,548	$9,834	$10,129	$10,433	$10,746	$11,068	$11,400	$11,742
Miscellaneous Fees	$127,550	$133,925	$140,190	$146,629	$153,370	$160,381	$167,768	$175,452	$183,494	$191,912
Truckstop Well	$10,000	$10,300	$10,609	$10,927	$11,255	$11,593	$11,941	$12,299	$12,668	$13,048
Interest Income	$2,500	$2,525	$2,550	$2,576	$2,602	$2,628	$2,654	$2,681	$2,708	$2,735
Rental Income	$15,120	$0	$0	$0	$0	$0	$0	$0	$0	$0
Miscellaneous Income	$6,500	$6,695	$6,896	$7,103	$7,316	$7,535	$7,761	$7,994	$8,234	$8,481
Total	**$1,292,800**	**$1,402,300**	**$1,490,900**	**$1,581,700**	**$1,678,300**	**$1,779,500**	**$1,841,000**	**$1,903,200**	**$1,967,600**	**$2,034,300**

TABLE 10-9

Projected Operational Expense

	2020	**2021**	**2022**	**2023**	**2024**	**2025**	**2026**	**2027**	**2028**	**2029**
Contracted Engineering Services	$50,000	$51,500	$53,045	$54,636	$56,275	$57,963	$59,702	$61,493	$63,338	$65,238
Generator Maintenance Contract	$5,600	$5,768	$5,941	$6,119	$6,303	$6,492	$6,687	$6,888	$7,095	$7,308
Employee Benefits	$85,800	$88,374	$91,025	$93,756	$96,569	$99,466	$102,450	$105,524	$108,690	$111,951
Operations and Maintenance	$141,000	$145,230	$149,587	$154,074	$158,697	$163,458	$168,362	$173,413	$178,615	$704,363
Permits, Inspections	$16,500	$16,995	$17,505	$18,030	$18,571	$19,128	$19,702	$20,293	$20,902	$21,529
Professional Fees	$8,000	$8,240	$8,487	$8,742	$9,004	$9,274	$9,552	$9,839	$10,134	$10,438
Salaries and Payroll Tax	$343,100	$355,263	$367,885	$380,983	$394,577	$408,688	$423,336	$438,542	$454,329	$470,722
Utilities	$73,100	$75,293	$77,552	$79,879	$82,275	$84,743	$87,285	$89,904	$92,601	$95,379
Retirement Expense	$31,600	$32,548	$33,524	$34,530	$35,566	$36,633	$37,732	$38,864	$40,030	$41,231
Travel and Meetings	$1,500	$1,545	$1,591	$1,639	$1,688	$1,739	$1,791	$1,845	$1,900	$1,957
Total	**$756,200**	**$780,800**	**$806,100**	**$832,400**	**$859,500**	**$887,600**	**$916,600**	**$946,600**	**$977,600**	**$1,530,100**

TABLE 10-10

Projected Administrative Expense – Assuming Connection to North Bend

	2020	2021	2022	2023	2024	2025	2026	2027	2028	2029
Transfer to Capital Reserves	$100,000	$100,000	$100,000	$100,000	$150,000	$150,000	$150,000	$150,000	$150,000	$100,000
Board of Trustee stipends	$17,600	$18,128	$18,672	$19,232	$19,809	$20,403	$21,015	$21,645	$22,294	$22,963
Employee Benefits	$15,900	$16,377	$16,868	$17,374	$17,895	$18,432	$18,985	$19,555	$20,142	$20,746
Insurance	$69,700	$73,185	$76,844	$80,686	$84,720	$88,956	$93,404	$98,074	$102,978	$108,127
Membership Refunds	$800	$824	$849	$874	$900	$927	$955	$984	$1,014	$1,044
Miscellaneous Expense	$10,500	$10,815	$11,139	$11,473	$11,817	$12,172	$12,537	$12,913	$13,300	$13,699
Office Expense	$65,500	$67,605	$69,638	$71,699	$73,829	$76,015	$78,293	$80,631	$83,048	$85,549
Prof. Fees – G&A	$130,700	$134,621	$138,660	$142,820	$147,105	$151,518	$156,064	$160,746	$165,568	$170,535
Rent/Mortgage	$50,100	$51,603	$53,151	$54,746	$56,388	$58,080	$59,822	$61,617	$63,466	$65,370
Retirement Expense	$9,600	$9,888	$10,185	$10,491	$10,806	$11,130	$11,464	$11,808	$12,162	$12,527
Salaries Expenses	$54,000	$55,620	$57,289	$59,008	$60,778	$62,601	$64,479	$66,413	$68,405	$70,457
Taxes – Payroll	$29,200	$30,660	$32,193	$33,803	$35,493	$37,268	$39,131	$41,088	$43,142	$45,299
Taxes – Business; NB Utility; Real Estate	$95,900	$100,695	$105,730	$111,017	$116,568	$122,396	$128,516	$134,942	$141,689	$148,774
Taxes and Minor Expenses	$23,400	$24,366	$25,375	$26,428	$27,526	$28,672	$29,869	$31,119	$32,424	$29,869
Total	**$672,900**	**$694,400**	**$716,600**	**$739,700**	**$813,600**	**$838,600**	**$864,500**	**$891,500**	**$919,600**	**$895,000**

TABLE 10-11

Projected Year End Operational Fund Balances

	2020	2021	2022	2023	2024	2025	2026	2027	2028	2029
Begin Year	**$657,300**	**$521,000**	**$448,200**	**$416,300**	**$426,000**	**$431,100**	**$484,500**	**$544,400**	**$609,400**	**$679,700**
Revenue	$1,292,800	$1,402,300	$1,490,900	$1,581,700	$1,678,300	$1,779,500	$1,841,000	$1,903,200	$1,967,600	$2,034,300
Expense	$1,429,100	$1,475,100	$1,522,700	$1,572,000	$1,673,200	$1,726,200	$1,781,100	$1,838,100	$1,897,300	$1,908,600
Net Income	($136,300)	($72,800)	($31,900)	$9,700	$5,100	$53,400	$59,800	$65,100	$70,300	$125,600
End of Year Balance	**$521,000**	**$448,200**	**$416,300**	**$426,000**	**$431,100**	**$484,500**	**$544,300**	**$609,500**	**$679,700**	**$805,300**

PROJECTED CAPITAL IMPROVEMENT FUND

Sallal receives capital improvement funds through sales of memberships, interest earned on reserves and transfer from the operational fund to the capital fund. Capital expenditures occur as needed as determined by the Board and as funding, either reserve or loan, is available. The Capital Improvement Plan is presented in Chapter 9. Table 10-12 shows Sallal's projected Capital Improvement Plan for each of the next 10 years. The project costs in Chapter 9 have been inflated at 3 percent per year for the projected year of installation from the estimated 2019 project costs presented in Chapter 9. The Capital Improvement Plan and the financing assumes that there will be a connection to North Bend. That assumption means larger costs in the short term and increased financial pressure. However, in the longer term the additional ERU capacity will pay for additional required infrastructure.

The Capital Improvement Plan schedule is largely paid for through the sale of memberships, and with a loan for the new Headquarters building, Well 4 and the new Rattlesnake Reservoir. Sallal's lease is expiring at the end of May 2021. The landlord has indicated that a limited lease extension may be possible.

Table 10-13 provides Sallal's projected Capital Fund, revenue, expense and reserves. The anticipated revenue accounts for the growth in new memberships as projected in Chapter 2.

TABLE 10-12

Projected Capital Expenses, Assuming a Connection to North Bend

	Project	Project Year	Project Cost	2020	2021	2022	2023	2024	2025	2026	2027	2028	2029
1	Stringfellow Connections Buy Back	2019	$633,438										
2	Chlorine (Disinfection) Systems	2020	$150,000	$150,000									
3	Water System Plan	2019	$65,000										
4	Office/Warehouse Facilities – Design	2019	$639,000										
5	CT Water Main	2020	$272,000	$280,000									
6	North Bend Contract (Prof Serv)	2020	$30,000	$31,000									
7	436th at NB Way RAB	2020	$200,000	$206,000									
8	436th at SE 136th Street	2020	$206,000	$212,000									
9	Well 4 Equipping (New Rattlesnake Well)	2020	$1,091,000	$562,000	$562,000								
10	Rattlesnake Reservoir 2	2020	$1,124,000	$1,158,000									
11	Flow Meter at Tanner BPS	2020	$35,000	$36,000									
12	Connection Between NB/SWA – Design	2023	$83,000				$93,000						
13	Office/Warehouse Facilities – Construction	2020	$4,271,000	$2,300,000	$2,300,000								
14	Flow Meter and SCADA at Lower Mt. Si BPS	2021	$40,000		$42,000								
15	Replace Trucks	2021	$50,000		$53,000								
16	Connection Between NB/SWA	2025	$837,000			$0			$999,000				
17	Flow Meter and SCADA at RP BPS	2022	$40,000			$44,000							
18	VFD Well 2	2022	$65,000			$71,000							
19	Tanner Road – 436th to Sallal Office	2023	$781,000				$879,000						
20	Small Track Hoe with Trailer	2023	$30,000				$34,000						
21	Rattlesnake Reservoir 3	2024	$1,990,000					$2,307,000					
22	Sampling Stations (3)	3-year Budget	$15,000	$15,000	$16,000	$16,000							
23	Annual Meter Replacement	10-year Budget	$300,000	$30,000	$32,000	$33,000	$34,000	$35,000	$36,000	$37,000	$38,000	$39,000	$40,000
24	PRV Station Upgrades	5-year Budget	$25,000	$26,000	$27,000	$27,000	$28,000	$29,000					
25	Edgewick Road	2028	$1,393,000									$1,818,000	
26	Cascade East Water Main	2029	$256,000										$344,000
27	Terrell Water Main	2030	$571,000										
28	River Point Fire Flow												
29	Water Main Replacement – Budget	4-year Budget	$600,000				$169,000	$174,000	$179,000	$184,000			
Total				**$5,006,000**	**$3,032,000**	**$191,000**	**$1,237,000**	**$2,545,000**	**$1,214,000**	**$221,000**	**$38,000**	**$1,857,000**	**$384,000**

(1) Capital projects listed here are those projects presented in Chapter 9.
(2) Capital expenses shown have been increased from the project cost year to the year planned using an annual inflation rate of 4 percent.

Page Intentionally Left Blank

TABLE 10-13

Projected Capital Fund

	2020	**2021**	**2022**	**2023**	**2024**	**2025**	**2026**	**2027**	**2028**	**2029**
ERU	$2,032	$2,093	$2,133	$2,168	$2,203	$2,237	$2,272	$2,307	$2,341	$2,375
New ERU	$85	$61	$40	$35	$35	$34	$35	$35	$34	$34
Beginning Year Balance	**$1,648,000**	**$919,000**	**$1,704,000**	**$2,426,000**	**$2,007,000**	**$1,830,000**	**$1,465,000**	**$2,113,000**	**$2,945,000**	**$1,939,000**
Miscellaneous Revenue	$144,000	$144,400	$144,900	$145,300	$195,800	$196,200	$196,700	$197,200	$197,600	$148,100
New Membership Revenue	$1,633,000	$1,172,000	$768,000	$672,000	$672,000	$653,000	$672,000	$672,000	$653,000	$653,000
Loan Revenue	$2,550,000	$2,550,000	$0	$0	$1,500,000	$0	$0	$0	$0	$0
Expense	$5,006,000	$3,032,000	$191,000	$1,237,000	$2,545,000	$1,214,000	$221,000	$38,000	$1,857,000	$384,000
Net Income	($679,000)	$834,000	$722,000	($419,000)	($177,000)	($365,000)	$648,000	$832,000	($1,006,000)	$417,000
Year End Balance	**$969,000**	**$1,754,000**	**$2,426,000**	**$2,007,000**	**$1,830,000**	**$1,465,000**	**$2,113,000**	**$2,945,000**	**$1,939,000**	**$2,356,000**

PROJECTED AMORTIZATION FUND

Table 10-14 provides the projected future debt schedule for Sallal, including existing debt payments and adding a future debt payment for the new headquarters. Future debt assumes funding from the US Rural Development program. The terms of the loan for this report have been estimated at a 40-year payment period and an interest rate of 3.0 percent. The amortization charge is assumed to increase in the second half of 2021 by 50 percent, in January of 2021 by 8 percent and in 2022 by 3 percent. If a connection to North Bend occurs an additional increase in amortization of 6 percent in each of 2024 and 2025 is assumed to offset future debt payments for the necessary infrastructure. The growth in revenue beyond 2033, shown in Figure 5-1, is reflecting additional connections to the system.

TABLE 10-14

Amortization Fund

	2020	2021	2022	2023	2024	2025	2026	2027	2028	2029
Beginning Balance	**$295,500**	**$112,600**	**$99,800**	**$109,800**	**$126,200**	**$107,900**	**$121,300**	**$142,300**	**$170,400**	**$205,900**
Revenue	$338,500	$373,400	$391,500	$397,900	$428,100	$459,800	$467,300	$474,500	$481,900	$489,400
Expense – Debt Payments	$521,400	$386,200	$381,500	$381,500	$446,400	$446,400	$446,400	$446,400	$446,400	$446,400
Net Income	($182,900)	($12,800)	$10,000	$16,400	($18,300)	$13,400	$20,900	$28,100	$35,500	$43,000
End of Year Balance	**$112,600**	**$99,800**	**$109,800**	**$126,200**	**$107,900**	**$121,300**	**$142,300**	**$170,400**	**$205,900**	**$248,900**

CASH FLOW SUMMARY

Table 10-15 provides a general overview of Sallal's projected cash flow for the period 2018 through 2032. Sallal is projected to have sufficient funds for its capital improvement plan, provided it secures a loan for the new headquarters.

At the time of this writing Sallal has not entered into a wholesale agreement with North Bend for the exchange of water. That contract is being negotiated. As presented in Table 9-1 the capital improvement plan in part depends upon whether or not Sallal and North Bend enter into a contract. With an agreement, in the short term the capital improvement plan will be more expensive. Conversely, Sallal will not be able to grow past the capacity shown in Table 4-2. At the growth rates assumed in Chapter 2, growth will be curtailed starting in 2034. Future capital projects after that time will need to be funded entirely by rates.

The operational and amortization funds are assumed to be impacted by connection to North Bend. The operational fund is impacted by additional transfer from operation to capital to minimize future loans needed to pay for the infrastructure costs to connect to North Bend. Amortization is impacted due to the loan needed for the larger reservoir and since reserves will be drawn down by the cost of the connection to North Bend. Figure 10-1 and Table 10-15 show the projected capital fund year-end balance both with and without a contract with North Bend, and the projected year end balance for both the operational and amortization funds (with a connection to North Bend).

Lastly, in Table 10-15 and Figure 10-1 the water main projects scheduled in the latter part of this decade have been pushed out and additional year with the connection to North Bend, as opposed to without North Bend, to allow for the accumulation of cash reserves.

TABLE 10-15

Year End Fund Balances

	2020	**2021**	**2022**	**2023**	**2024**	**2025**	**2026**	**2027**	**2028**	**2029**	**2030**	**2031**	**2032**
Operations Fund with North Bend	$521,000	$448,200	$416,300	$426,000	$431,100	$484,500	$544,300	$609,500	$679,700	$805,300	$934,900	$1,068,000	$1,204,800
Amortization Fund with North Bend	$112,600	$99,800	$109,800	$126,200	$107,900	$121,300	$142,300	$170,400	$205,900	$248,900	$299,200	$356,900	$422,200
Capital Fund w/North Bend	$919,000	$1,704,000	$2,426,000	$2,007,000	$1,830,000	$1,465,000	$2,113,000	$2,945,000	$1,939,000	$2,356,000	$2,326,000	$2,365,000	$2,929,000
Operations Fund w/out North Bend	$571,000	$548,200	$516,300	$526,000	$581,100	$684,500	$794,300	$909,500	$1,029,700	$1,155,300	$1,284,900	$1,418,000	$1,554,800
Amortization Fund w/out North Bend	$112,600	$99,800	$109,800	$126,200	$149,100	$178,300	$214,200	$256,800	$306,200	$362,400	$425,400	$495,100	$571,700
Capital Fund w/out North Bend	$950,000	$2,297,000	$3,019,000	$2,782,000	$2,089,000	$2,673,000	$3,271,000	$2,288,000	$2,716,000	$2,710,000	$2,791,000	$3,318,000	$4,102,000

Note: Summary of tables presented above.

Page Intentionally Left Blank

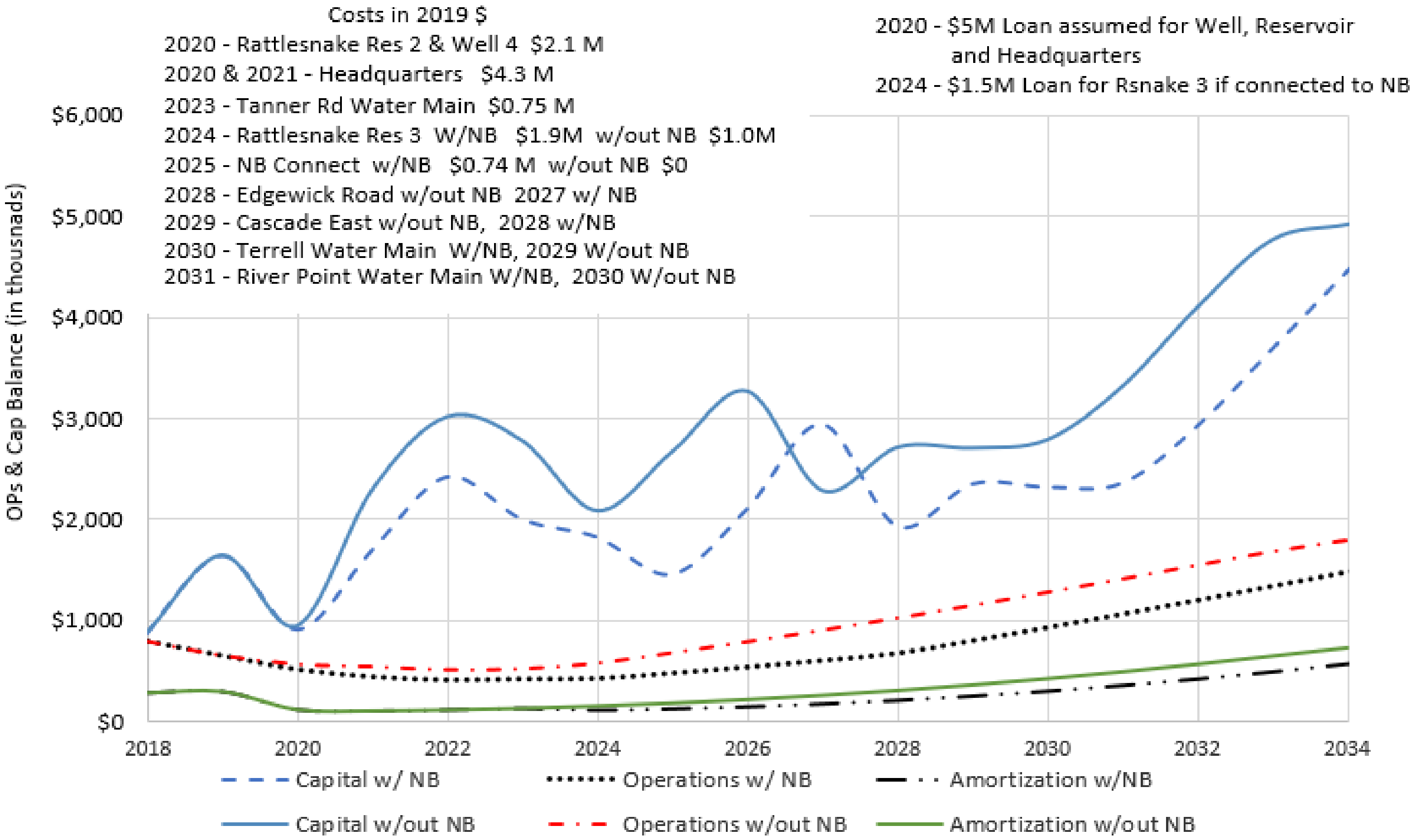

Note: comments in red indicate cost difference with or without North Bend

FIGURE 10-1

Year End Reserves

APPENDIX A

WATER FACILITIES INVENTORY
AND OPERATING PERMIT

Washington State Department of Health
Division of Environmental Health
Office of Drinking Water

WATER FACILITIES INVENTORY (WFI) FORM

ONE FORM PER SYSTEM

ATTACHMENT A

Quarter: 1
Updated: 10/04/2019
Printed: 1/11/2020
WFI Printed For: On-Demand
Submission Reason: Treatment Update

RETURN TO: Central Services - WFI, PO Box 47822, Olympia, WA, 98504-7822

1. SYSTEM ID NO.	2. SYSTEM NAME	3. COUNTY	4. GROUP	5. TYPE
75560 Q	SALLAL WATER ASSOCIATION INC	KING	A	Comm

6. PRIMARY CONTACT NAME & MAILING ADDRESS

TED J. STONEBRIDGE [GENERAL MANAGER]
PO BOX 378
NORTH BEND, WA 98045

STREET ADDRESS IF DIFFERENT FROM ABOVE

ATTN
ADDRESS 44021 SE TANNER RD
CITY NORTH BEND STATE WA ZIP 98045

7. OWNER NAME & MAILING ADDRESS

SALLAL WATER ASSOCIATION GENERAL MANAGER
TED J. STONEBRIDGE
PO BOX 378
NORTH BEND, WA 98045

STREET ADDRESS IF DIFFERENT FROM ABOVE

ATTN
ADDRESS
CITY

9. 24 HOUR PRIMARY CONTACT INFORMATION		10. OWNER CONTACT INFORMATION	
Primary Contact Daytime Phone: (425) 888-3650		Owner Daytime Phone: (425) 888-3650	
Primary Contact Mobile/Cell Phone: (360) 972-4804		Owner Mobile/Cell Phone:	
Primary Contact Evening Phone: (xxx)-xxx-xxxx		Owner Evening Phone:	
Fax:	E-mail: xxxxxxxxxxxxxxxxxxxx	Fax: (425) 831-5392	E-mail: xxxxxxxxxxxxxxxxxxxx

11. SATELLITE MANAGEMENT AGENCY - SMA (check only one)

☒ Not applicable (Skip to #12)
☐ Owned and Managed
☐ Managed Only
☐ Owned Only

SMA NAME: ______________________ SMA Number:

12. WATER SYSTEM CHARACTERISTICS (mark all that apply)

☐ Agricultural
☒ Commercial / Business
☐ Day Care
☐ Food Service/Food Permit
☐ 1,000 or more person event for 2 or more days per year
☐ Hospital/Clinic
☒ Industrial
☐ Licensed Residential Facility
☐ Lodging
☒ Recreational / RV Park
☒ Residential
☒ School
☐ Temporary Farm Worker
☒ Other (church, fire station, etc.): ______________

13. WATER SYSTEM OWNERSHIP (mark only one)

☒ Association
☐ City / Town
☐ County
☐ Federal
☐ Investor
☐ Private
☐ Special District
☐ State

14. STORAGE CAPACITY (gallons)

1,549,000

- SEE NEXT PAGE FOR A COMPLETE LIST OF SOURCES -

WATER FACILITIES INVENTORY (WFI) FORM - Continued

ATTACHMENT A

1. SYSTEM ID NO.	2. SYSTEM NAME	3. COUNTY	4. GROUP	5. TYPE
75560 Q	SALLAL WATER ASSOCIATION INC	KING	A	Comm

15	16 SOURCE NAME	17 INTERTIE	18 SOURCE CATEGORY										19 USE			20	21 TREATMENT						22 DEPTH	23	24 SOURCE LOCATION			
Source Number	LIST UTILITY'S NAME FOR SOURCE AND WELL TAG ID NUMBER. Example: WELL #1 XYZ456 IF SOURCE IS PURCHASED OR INTERTIED, LIST SELLER'S NAME Example: SEATTLE	INTERTIE SYSTEM ID NUMBER	WELL	WELL FIELD	WELL IN A WELL FIELD	SPRING	SPRING FIELD	SPRING IN SPRINGFIELD	SEA WATER	SURFACE WATER	RANNEY / INF. GALLERY	OTHER	PERMANENT	SEASONAL	EMERGENCY	SOURCE METERED	NONE	CHLORINATION	FILTRATION	FLUORIDATION	IRRADIATION (UV)	OTHER	DEPTH TO FIRST OPEN INTERVAL IN FEET	CAPACITY (GALLONS PER MINUTE)	1/4, 1/4 SECTION	SECTION NUMBER	TOWNSHIP	RANGE
S01	WELL #1		X										X			Y		X					154	800	NW NE	34	23N	08E
S02	WELL #2		X										X			Y	X						248	800	NW NE	34	23N	08E
S03	WELL #3		X										X			Y		X					240	91	SW SE	18	23N	09E
S04	InAct 12/19/2007 Unapproved Well 3a		X												X	N	X							30			00N	00E
S05	Pre-Active 05/15/2019 Well #4 BKX255				X								X			Y	X						138	1200	SW NW	34	23N	08E
S06	Pre-Active 07/05/2019 WF Wells 1,2,4			X									X			Y	X						138	1600	SW NW	34	23N	08E

WATER FACILITIES INVENTORY (WFI) FORM - Continued

ATTACHMENT A

1. SYSTEM ID NO.	2. SYSTEM NAME	3. COUNTY	4. GROUP	5. TYPE
75560 Q	SALLAL WATER ASSOCIATION INC	KING	A	Comm

	ACTIVE SERVICE CONNECTIONS	DOH USE ONLY! CALCULATED ACTIVE CONNECTIONS	DOH USE ONLY! APPROVED CONNECTIONS
25. SINGLE FAMILY RESIDENCES (How many of the following do you have?)		1614	Unspecified
A. Full Time Single Family Residences (Occupied 180 days or more per year)	1614		
B. Part Time Single Family Residences (Occupied less than 180 days per year)	0		
26. MULTI-FAMILY RESIDENTIAL BUILDINGS (How many of the following do you have?)			
A. Apartment Buildings, condos, duplexes, barracks, dorms	0		
B. Full Time Residential Units in the Apartments, Condos, Duplexes, Dorms that are occupied more than 180 days/year	0		
C. Part Time Residential Units in the Apartments, Condos, Duplexes, Dorms that are occupied less than 180 days/year	0		
27. NON-RESIDENTIAL CONNECTIONS (How many of the following do you have?)			
A. Recreational Services and/or Transient Accommodations (Campsites, RV sites, hotel/motel/overnight units)	0	0	
B. Institutional, Commercial/Business, School, Day Care, Industrial Services, etc.	38	38	
28. TOTAL SERVICE CONNECTIONS		1652	

29. FULL-TIME RESIDENTIAL POPULATION

A. How many residents are served by this system 180 or more days per year? 4956

30. PART-TIME RESIDENTIAL POPULATION	JAN	FEB	MAR	APR	MAY	JUN	JUL	AUG	SEP	OCT	NOV	DEC
A. How many part-time residents are present each month?												
B. How many days per month are they present?												

31. TEMPORARY & TRANSIENT USERS	JAN	FEB	MAR	APR	MAY	JUN	JUL	AUG	SEP	OCT	NOV	DEC
A. How many total visitors, attendees, travelers, campers, patients or customers have access to the water system each month?												
B. How many days per month is water accessible to the public?												

32. REGULAR NON-RESIDENTIAL USERS	JAN	FEB	MAR	APR	MAY	JUN	JUL	AUG	SEP	OCT	NOV	DEC
A. If you have schools, daycares, or businesses connected to your water system, how many students daycare children and/or employees are present each month?	1100	1100	1100	1100	1100	1100	65	65	1100	1100	1100	1100
B. How many days per month are they present?	20	20	20	20	20	15	20	20	15	20	18	15

33. ROUTINE COLIFORM SCHEDULE	JAN	FEB	MAR	APR	MAY	JUN	JUL	AUG	SEP	OCT	NOV	DEC
* Requirement is exception from WAC 246-290	7	7	7	7	7	7	6	6	7	7	7	7

34. NITRATE SCHEDULE	QUARTERLY	ANNUALLY	ONCE EVERY 3 YEARS
(One Sample per source by time period)			

35. Reason for Submitting WFI:

☐ **Update - Change** ☐ **Update - No Change** ☐ **Inactivate** ☐ **Re-Activate** ☐ **Name Change** ☐ **New System** ☐ **Other** ____________

36. I certify that the information stated on this WFI form is correct to the best of my knowledge.

SIGNATURE: ____________________ **DATE:** ____________________

PRINT NAME: ____________________ **TITLE:** ____________________

Intentionally left blank

WS ID	**WS Name**
75560	SALLAL WATER ASSOCIATION INC

Total WFI Printed: 1

ATTACHMENT A

Washington State Department of
Health
Division of Environmental Health
Office of Drinking Water

Water Facilities Inventory (WFI)

Report Create Date:	1/11/2020		
Water System Id(s):	75560		
Print Data on Distribution Page:	Yes		
Print Copies For:	DOH Copy		
Water System Name:	ALL		
County:	-- Any --		
Region:	ALL		
Group:	ALL		
Type:	ALL		
Permit Renewal Quarter:	ALL		
Water System Is New:	ALL		
Water System Status:	ALL		
Water Status Date From:	ALL	**To**	ALL
Water System Update Date	ALL	**To**	ALL
Owner Number:	ALL		
SMA Number:	ALL		
SMA Name:	ALL		
Active Connection Count From:	ALL	**To:**	ALL
Approved Connection Count	ALL	**To:**	ALL
Full-Time Population From:	ALL	**To:**	ALL
Water System Expanding	ALL		
Source Type:	ALL		
Source Use:	ALL		
WFI Printed For:	On-Demand		

APPENDIX B

WATER RIGHTS

Sallal Water Association
Water Rights Self- Assessment
Sep-20

Water Right Permit, Certificate, or Claim # *If water right is interruptible, identify limitation in yellow section below	WFI Source # If a source has multiple water rights, list each water right on separate line	Existing Water Rights Qi= Instantaneous Flow Rate Allowed (GPM or CFS) Qa= Annual Volume Allowed (Acre-Feet/Year) This includes wholesale water sold				Current Source Production – Most Recent Calendar Year Qi = Max Instantaneous Flow Rate Withdrawn (GPM or CFS) Qa = Annual Volume Withdrawn (Acre-Feet/Year) This includes wholesale water sold				10-Year Forecasted Source Production (determined from WSP) This includes wholesale water sold				20-Year Forecasted Source Production (determined from WSP) This includes wholesale water sold			
		Primary Qi Maximum Rate Allowed	Non-Additive Qi Maximum Rate Allowed	Primary Qa Maximum Volume Allowed (ac-ft/yr)	Non-Additive Qa Qa Maximum Volume Allowed (ac-ft/yr)	Total Qi Maximum Instantaneous Flow Rate Withdrawn	Current Excess or (Deficiency) Qi	Total Qa Maximum Annual Volume	Current Excess or (Deficiency) Qa	Total Qi Maximum Instantaneous Flow Rate in 10 Years	10-Year Forecasted Excess or (Deficiency) Qi	Total Qa Maximum Annual Volume in 10 Years	10-Year Forecasted Excess or (Deficiency) Qa	Total Qi Maximum Instantaneous Flow Rate in 20 Years	20-Year Forecasted Excess or (Deficiency) Qi	Total Qa Maximum Annual Volume in 20 Years	20-Year Forecasted Excess or (Deficiency) Qa
Cert. G1-24671C	Well Sources 1 & 2	1600		696		972	628	551.5	144.5	1003	597	666	30	1114	486	737	-41
Cert. G1-24975C	Well Source 3	91			102	60	31			60	31			60	31		
G1-28106	Application for 326 ac-ft/yr to be pumped from Wells 1 & 2. Adequate installed capacity.																
	TOTALS =	1691		696		1032	659	551.5	144.5	1063	628	666	30	1174	517	737	-41

ATTACHMENT A

STATE OF WASHINGTON
DEPARTMENT OF ECOLOGY

REPORT OF EXAMINATION
TO APPROPRIATE PUBLIC WATERS OF THE STATE OF WASHINGTON

☐ Surface Water (Issued in accordance with the provisions of Chapter 117, Laws of Washington for 1917, and amendments thereto, and the rules and regulations of the Department of Ecology.)

☒ Ground Water (Issued in accordance with the provisions of Chapter 263, Laws of Washington for 1945, and amendments thereto, and the rules and regulations of the Department of Ecology.)

PRIORITY DATE	APPLICATION NUMBER	PERMIT NUMBER	CERTIFICATE NUMBER
May 28, 1985	G1-24671		

NAME
Sallal Water Association Attention: Renny Lillejord

ADDRESS (STREET)	(CITY)	(STATE)	(ZIP CODE)
P.O. Box 378	North Bend	Washington	98045

PUBLIC WATERS TO BE APPROPRIATED

SOURCE
2 Wells

TRIBUTARY OF (IF SURFACE WATERS)

MAXIMUM CUBIC FEET PER SECOND	MAXIMUM GALLONS PER MINUTE	MAXIMUM ACRE-FEET PER YEAR
—	2000	696*

QUANTITY, TYPE OF USE, PERIOD OF USE
Municipal water supply - continuously

*supplemental to G1-23725

LOCATION OF DIVERSION/WITHDRAWAL

APPROXIMATE LOCATION OF DIVERSION—WITHDRAWAL
Approximately 1200 feet south and 2600 feet west of northeast corner of Section 34.

LOCATED WITHIN (SMALLEST LEGAL SUBDIVISION)	SECTION	TOWNSHIP N.	RANGE, (E. OR W.) W.M.	W.R.I.A.	COUNTY
NW¼NE¼	34	23	8E	7	King

RECORDED PLATTED PROPERTY

LOT	BLOCK	OF (GIVE NAME OF PLAT OR ADDITION)

LEGAL DESCRIPTION OF PROPERTY ON WHICH WATER IS TO BE USED

Area served by Sallal Water Association.

ATTACHMENT A

DESCRIPTION OF PROPOSED WORKS

Well #1, 12" X 150', Well #2, 12" X 160'
100 HP pumps in each well
12" delivery lines to reservoir ½ - 1 million gallon size
gravity flow to service area

DEVELOPMENT SCHEDULE

BEGIN PROJECT BY THIS DATE:	COMPLETE PROJECT BY THIS DATE:	WATER PUT TO FULL USE BY THIS DATE:
Started	1 year from permit issuance	2 years from permit issuance

REPORT

Background:

On May 28, 1985, the Sallal Water Association filed this application requesting 2000 gallons per minute from 2 wells for municipal water supply.

Notice was published in the Valley Record on August 29 and September 5, 1985. No protests were filed.

Investigation:

Evaluation for this application consists of review of office records, visit to the site conducted on October 22, 1985, and conversations with Engineers working on the water supply project.

The water association has been serving its customers with water purchased from the City of Seattle. The association does hold one ground water permit issued February 1982 (G1-23725P) for 500 gallons per minute, 800 acre-feet per year for municipal supply, but the well has never been constructed.

Sallal Water Association negotiated with the City of Seattle for developing an independent source of water to supply the Sallal service area. The two wells which have been drilled are located on City of Seattle property and easements have been recorded.

The well sites are located southeasterly of North Bend on the northern shore of Rattlesnake Lake. The two wells are approximately 600 feet apart. Well No. 1 was constructed in 1983 and Well No. 2 was constructed in 1985. Pump tests were conducted and an engineering report prepared documenting the results. Both wells are similar in depth, Well No. 1 being 150 feet deep, and Well No. 2 being 163 feet deep.
Test results and the Engineering report prepared by Converse Consultants indicated both wells are tapping the same aquifer. Both wells were pumped at rates in excess of 1000 gallons per minute. However, the engineering report does indicate that the manufacture's specifications for maximum intake through the screens may limit production to 850 gallons per minute or slightly above. At this time, both wells have been capped awaiting the installation of 100 horsepower pumps early in 1986. When the pumps are installed and the wells come on line, assessment of the actual pumping capacity of the wells can be made.

According to the water district, they are currently serving 600 hookups with wholesale water to an additional 500. The projected demand for the year 2000 indicates an average daily use of 622,000 gallons which would total 696 acre-feet per year. The water association's existing permit already authorizes more than the district's needs so this application would be considered supplemental to G1-23725P.

Research of office records indicated no other recorded wells within a quarter mile radius of the applicant's wells.

Conclusion:

In accordance with Section 90.03 and 90.44 RCW, I find that there is water available for appropriation from the source in question and that the appropriation as recommended above will not impair existing rights or be detrimental to the public welfare. Therefore, permit should issue subject to existing rights and indicated provisions.

Recommendation:

A permit should issue for 2000 gallons per minute, 696 acre-feet per year, supplemental to G1-23725 from two wells for municipal supply.

A certificate of water right will not be issued until a final investigation is made.

Installation and maintenance of an access port as described in Ground Water Bulletin No. 1 is required. An air line and gauge may be installed in addition to the access port.

An approved measuring device shall be installed and maintained in accordance with RCW 90.03.360, WAC 508-64-020 through WAC 508-64-040 (Installation, operation and maintenance requirements attached hereto).

ATTACHMENT A

permit

✓The total combined withdrawal from G1-23725 and G1-24671 shall not exceed 800 acre-feet per year.

REPORT BY: Janet [illegible] **DATE:** 3·6·86

Wells 1 & 2 CHMENT A

STATE OF WASHINGTON
DEPARTMENT OF ECOLOGY

CERTIFICATE OF WATER RIGHT

☐ Surface Water (Issued in accordance with the provisions of Chapter 117, Laws of Washington for 1917, and amendments thereto, and the rules and regulations of the Department of Ecology.)

☒ Ground Water (Issued in accordance with the provisions of Chapter 263, Laws of Washington for 1945, and amendments thereto, and the rules and regulations of the Department of Ecology.)

PRIORITY DATE	APPLICATION NUMBER	PERMIT NUMBER	CERTIFICATE NUMBER
May 28, 1985	G1-24671	G1-24671P	G1-24671C

NAME
Sallal Water Association Attention: Renny Lillejord

ADDRESS (STREET)	(CITY)	(STATE)	(ZIP CODE)
P.O. Box 378	North Bend	Washington	98045

This is to certify that the herein named applicant has made proof to the satisfaction of the Department of Ecology of a right to the use of the public waters of the State of Washington as herein defined, and under and specifically subject to the provisions contained in the Permit issued by the Department of Ecology, and that said right to the use of said waters has been perfected in accordance with the laws of the State of Washington, and is hereby confirmed by the Department of Ecology and entered of record as shown, but is limited to an amount actually beneficially used.

PUBLIC WATER TO BE APPROPRIATED

SOURCE
2 Wells

TRIBUTARY OF (IF SURFACE WATERS)

MAXIMUM CUBIC FEET PER SECOND	MAXIMUM GALLONS PER MINUTE	MAXIMUM ACRE-FEET PER YEAR
—	1600	696*

QUANTITY, TYPE OF USE, PERIOD OF USE
Municipal water supply - continuously

*supplemental to G1-23725

LOCATION OF DIVERSION/WITHDRAWAL

APPROXIMATE LOCATION OF DIVERSION—WITHDRAWAL
Approximately 1200 feet south and 2600 feet west of northeast corner of Section 34.

LOCATED WITHIN (SMALLEST LEGAL SUBDIVISION)	SECTION	TOWNSHIP N.	RANGE, (E. OR W.) W.M.	W.R.I.A.	COUNTY
NW¼NE¼	34	23	8E	7	King

RECORDED PLATTED PROPERTY

LOT	BLOCK	OF (GIVE NAME OF PLAT OR ADDITION)

LEGAL DESCRIPTION OF PROPERTY ON WHICH WATER IS TO BE USED

Area served by Sallal Water Association.

ECY 040-1-2 (Rev. 4 81)

(SEE REVERSE SIDE)

ATTACHMENT A

Well 3

STATE OF WASHINGTON
DEPARTMENT OF ECOLOGY

CERTIFICATE OF WATER RIGHT

☐ Surface Water (Issued in accordance with the provisions of Chapter 117, Laws of Washington for 1917, and amendments thereto, and the rules and regulations of the Department of Ecology.)

☒ Ground Water (Issued in accordance with the provisions of Chapter 263, Laws of Washington for 1945, and amendments thereto, and the rules and regulations of the Department of Ecology.)

PRIORITY DATE	APPLICATION NUMBER	PERMIT NUMBER	CERTIFICATE NUMBER
January 28, 1987	G1-24975	G1-24975P	G1-24975C

NAME
Sallal Water Association

ADDRESS (STREET)	(CITY)	(STATE)	(ZIP CODE)
P.O. Box 378	North Bend	Washington	98045

This is to certify that the herein named applicant has made proof to the satisfaction of the Department of Ecology of a right to the use of the public waters of the State of Washington as herein defined, and under and specifically subject to the provisions contained in the Permit issued by the Department of Ecology, and that said right to the use of said waters has been perfected in accordance with the laws of the State of Washington, and is hereby confirmed by the Department of Ecology and entered of record as shown, but is limited to an amount actually beneficially used.

PUBLIC WATER TO BE APPROPRIATED

SOURCE
Well

TRIBUTARY OF (IF SURFACE WATERS)

MAXIMUM CUBIC FEET PER SECOND	MAXIMUM GALLONS PER MINUTE	MAXIMUM ACRE-FEET PER YEAR
—	91	102*

QUANTITY, TYPE OF USE, PERIOD OF USE
Municipal water supply - continuously

*Supplemental to G1-24671C.

LOCATION OF DIVERSION/WITHDRAWAL

APPROXIMATE LOCATION OF DIVERSION—WITHDRAWAL
1220' E and 100' N from the SW corner of Section 18.

LOCATED WITHIN (SMALLEST LEGAL SUBDIVISION)	SECTION	TOWNSHIP N.	RANGE, (E. OR W.) W.M.	W.R.I.A.	COUNTY
SE¼ SW¼	18	23	9	7	King

RECORDED PLATTED PROPERTY

LOT	BLOCK	OF (GIVE NAME OF PLAT OR ADDITION)

LEGAL DESCRIPTION OF PROPERTY ON WHICH WATER IS TO BE USED

Area served by Sallal Water Association within portions of T.23N., R.8E., and R.9E., W.M., King County, Washington.

ECY 040-1-2 (Rev. 4-81)

(SEE REVERSE SIDE)

$10.00 [illegible]on. Refundable Fe[illegible]

WASHINGTON STATE
DEPARTMENT OF
ECOLOGY

State of Washington
Application for a Water Right

RECEIVED
JUN 1 4 2001
DEPT OF ECOLOGY

ATTACHMENT A
For Ecology Use
Fee Paid $10.00
Date 6/14/01

Please follow the attached instructions to avoid unnecessary delays.

Section 1. APPLICANT - PERSON, ORGANIZATION, OR WATER SYSTEM

Name SALLAL WATER ASSOCIATION Home Tel: (____)____ - ____

Mailing Address P.O. BOX 378 Work Tel: (425) 888 - 3650

City NORTH BEND State WA Zip+4 98045 + ____ FAX: (425) 888 - 5392

Section 2. CONTACT - PERSON TO CALL ABOUT THE APPLICATION
☐ Same as above

Name JOAN BUTTEN Home Tel: (____)____ - ____

Mailing Address P.O. BOX 378 Work Tel: (425) 888 - 3650

City NORTH BEND State WA Zip+4 98045 + ____ FAX: (425) 888 - 5392

Relationship to applicant MANAGER - SALLAL WATER ASSOCIATION

Section 3. STATEMENT OF INTENT

The applicant requests a permit to use not more than existing Qi of 1600gpm is Adequate (☒ gallons per minute or ☐ cubic feet per second) from a ☐ surface water source or ☒ ground water source (check only one) for the purpose(s) of DOMESTIC/PUBLIC MUNICIPAL WATER SUPPLY - Area served by SALLAL WATER ASSOCIATION. **ATTACH A "LEGAL" DESCRIPTION OF THE PLACE OF USE. (See instructions.)** *NOTE: A tax parcel number or a plat number is not sufficient.*

Estimate a maximum annual quantity to be used in acre-foot per year: 326 Acre feet

☐ Check if the water use is proposed for a short-term project. Indicate the period of time that the water will be needed:

From ___/___/___ to ___/___/___

FEE PAID 10.00 6/14/01

Section 4. WATER SOURCE

If SURFACE WATER	If GROUNDWATER
Name the water source and indicate if stream, spring, lake, etc. If unnamed, write "unnamed spring," "unnamed stream," etc.: Number of diversions: ____	A permit is desired for 2 existing well(s). Additional Qa of 326 Acre feet of Water for existing Wells with Adequate installed pump capacity.
Source flows into (name of body of water):	Size & depth of well(s): SALLAL WELL 01 - 12"/8" CASING; 305' SALLAL WELL 02 - 16" CASING; 173'

LOCATION

Enter the north-south and east-west distances in feet from the point of diversion or withdrawal to the nearest section corner: SEE Attached map for LOCATION of WELLS

	1/4 of	1/4 of	Section	Township	Range (E/W)	County	If location of source is platted, complete below:		
							Lot	Block	Subdivision
WELL 01	NSW	NE	34	23	8E	KING			
WELL 02	NW	NE	34	23	8 E	KING			

For Ecology Use Date Received: 6/14/01 Priority Date: 6/14/01

SEPA: [✓ Exempt]/Not Exempt FERC License # ____ Dept. Of Health # ____

Date Accepted As Complete 6/14/01 By DB. Date Returned ____ By ____ WRIA: ____

ECY 040-1-14
Rev. 7/97 ** f

APPLICATION

Appl. No.: G1-28186

ATTACHMENT A

Section 5. GENERAL WATER SYSTEM INFORMATION

A. Name of system, if named: SALLAL WATER ASSOCIATION

B. Briefly describe your proposed water system. (**See instructions**.)

THE Application is for Additional Qa for two installed domestic supply Wells with Existing Water Rights. THE currently righted Qi of 1600 gpm (for both wells) is Adequate – Additional Qa is Needed to meet demand within Approved SALLAL Water Association Service Area. SALLAL Water Association is an Approved Group A Water System serving an Approved Service Area Near North Bend, Washington.

C. Do you already have any water rights or claims associated with this property or system? ☒ YES ☐ NO
PROVIDE DOCUMENTATION. Wells 01 & 02 – Water Right G1-24671 C
Qi = 1600 gpm Qa = 696 ac ft.

Section 6. DOMESTIC/PUBLIC WATER SUPPLY SYSTEM INFORMATION
(Completed for all domestic/public supply uses.)

A. Number of "connections" requested: ___________ Type of connection SALLAL currently serves Approximately 1294 connections (SALLAL) and 637 connections (Wilderness Rim)
(Homes, Apartment, Recreational, etc.)

B. Are you within the area of an approved water system? – SALLAL is An Approved Water System ☐ YES ☐ NO
If yes, explain why you are unable to connect to the system. *Note: Regional water systems are identified by your County Health Department.* THE objective is to obtain Adequate water to Serve SALLAL Service Area so that Additional Private Wells will Not be required.

Complete C. and D. only if the proposed water system will have fifteen or more connections.

C. Do you have a current water system plan approved by the Washington State Department of Health? – A New WSP was submitted in June 2001 ☑ YES ☐ NO
If yes, when was it approved? ___________________ Please attach the current approved version of your plan.

D. Do you have an approved conservation plan? – Conservation Plan (Part of WSP) submitted 5/2001 ☐ YES ☒ NO
If yes, when was it approved? ___________________ Please attach the current approved version of your plan.

Section 7. IRRIGATION/AGRICULTURAL/FARM INFORMATION
(Completed for all irrigation and agriculture uses.)

A. Total number of acres to be irrigated: ___________

B. List total number of acres for other specified agricultural uses:

Use ______________________ Acres ________
Use ______________________ Acres ________
Use ______________________ Acres ________

C. Total number of acres to be covered by this application: ________

D. Family Farm Act (Initiative Measure Number 59, November 3, 1977)
Add up the acreage in which you have a controlling interest, including only:
‡ Acreage irrigated under water rights acquired after December 8, 1977;
‡ Acreage proposed to be irrigated under this application;
‡ Acreage proposed to be irrigated under other pending application(s).

1. Is the combined acreage greater than 2000 acres? ☐ YES ☐ NO
2. Do you have a controlling interest in a Family Farm Development Permit? ☐ YES ☐ NO
If yes, enter permit no.: ______________________

E. Farm uses:
Stockwater - Total # of animals ___________ Animal Type ___________ (If dairy cattle, see below)
Dairy - # Milking ___________ # Non-milking ___________

Section 8. WATER STORAGE

Will you be using a dam, dike, or other structure to retain or store water? ☐ YES ☒ NO

NOTE: If you will be storing 10 acre-feet or more of water and/or if the water depth will be 10 feet or more at the deepest point, and some portion of the storage will be above grade, you must also apply for a reservoir permit. You can get a reservoir permit application from the Department of Ecology.

Section 9. DRIVING DIRECTIONS

Provide detailed driving instructions to the project site.

THE TWO existing SALLAL Production WELLS Are LOCATED just inside the boundary of property owned by Seattle Public Utilities As Part of the Cedar River Watershed. From the City of North BEND - proceed EAST ON I-90 to Cedar Falls Rd Exit - turn Rt. And proceed toward Watershed; the road to the wells is the LAST road (dirt/gravel) on the right before Rattlesnake Lake Park. There is A locked gate Across road And Access is controlled — call for permission to enter.

Section 10. REQUIRED MAP

A. Attach a map of the project. (**See instructions**.)

Maps showing SALLAL Service Area boundary And location of existing Wells is Attached.

Section 11. PROPERTY OWNERSHIP

A. Does the applicant own the land on which the water will be used? ☐ YES ☒ NO
If no, explain the applicant's interest in the place of use and provide the name(s) and address(es) of the owner(s):

Domestic/Public Water Supply Serving Approved Service Area per East King County Coordinated Water System Plan.

B. Does the applicant own the land on which the water source is located? ☐ YES ☒ NO
If no, submit a copy of agreement:

The Wells Are located on property owned by the City of Seattle (Seattle Public Utilities).

I certify that the information above is true and accurate to the best of my knowledge. I understand that in order to process my application, I grant staff from the Department of Ecology access to the site for inspection and monitoring purposes. Even though I may have been assisted in the preparation of the above application by the employees of the Department of Ecology, all responsibility for the accuracy of the information rests with me.

Joan L. Bolton
Applicant (or authorized representative)

June 6, 2001
Date

same
Landowner for place of use (if same as applicant, write "same")

Date

ATTACHMENT A

Use this page to continue your answers to any questions on the application. Please indicate section number before answer.

We are returning your application for the following reason(s):	
______ Examination fee was not enclosed	APPLICANT PLEASE RETURN TO CASHIER, PO BOX 5128, LACEY, WA 98509-5128
______ Section number(s) ______________________ is/are incomplete	APPLICANT PLEASE RETURN TO THE APPROPRIATE REGIONAL OFFICE
Explanation:	
Please provide the additional information requested above and return your application by ______________ ______________________ (date).	

Ecology staff______________________ Date______________

Ecology is an Equal Opportunity and Affirmative Action employer.

To receive this document in alternative format, contact the Water Resources Program at (360) 407-6604 (Voice) or (360) 407-6006 (TDD).

ATTACHMENT A

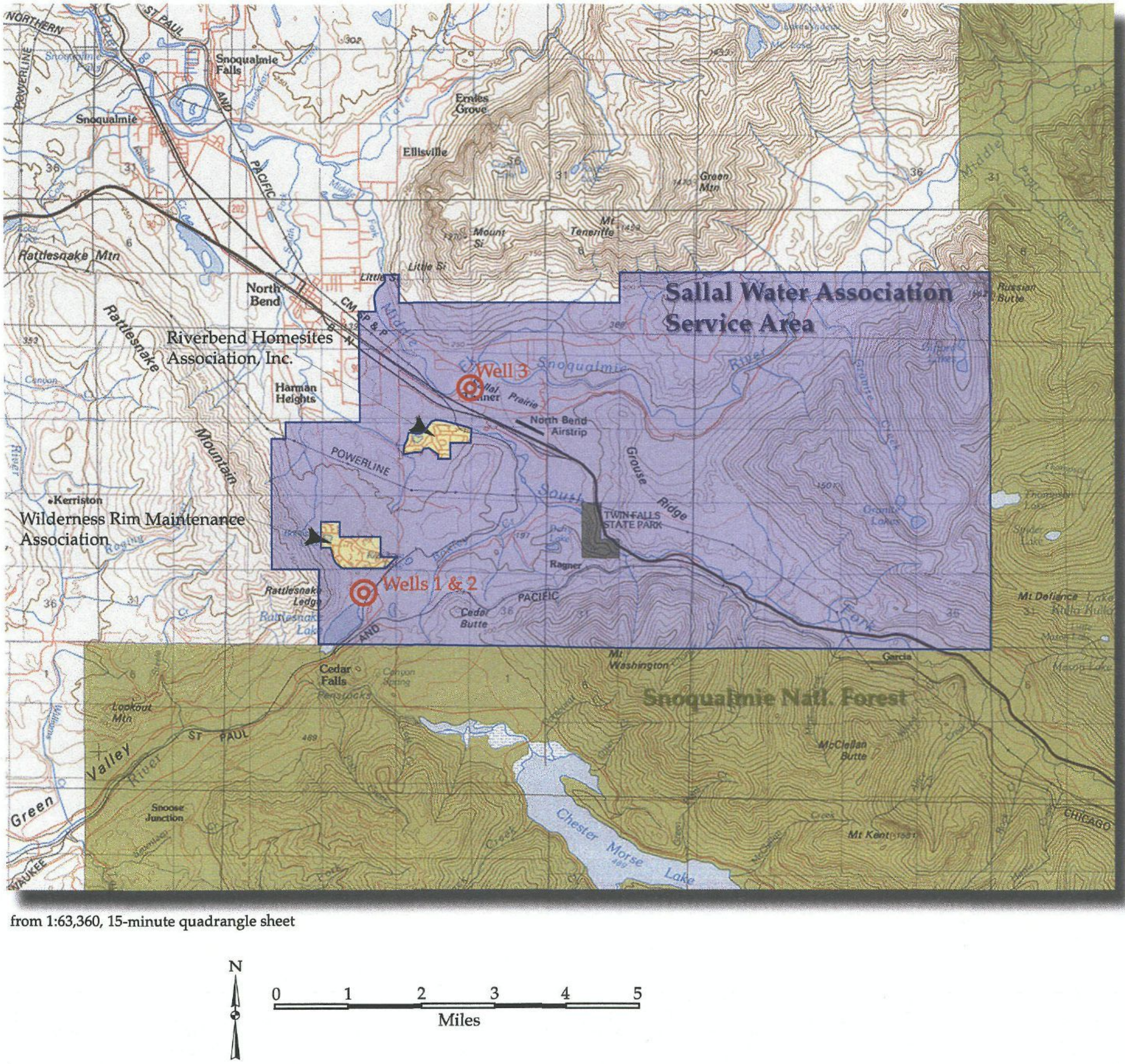

from 1:63,360, 15-minute quadrangle sheet

Legend

▨ Sallal Water Association Service Area

▨ Water Systems within Sallal Water Association Service Area (Riverbend and Wilderness Rim)

◎ Production Well

Well #	Name
1 & 2	Rattlesnake
3	Edgewick

Figure 2-2

Sallal Water Association Service Area Boundary and Wells

Sallal Water Association
September 2, 1998

Compass Geographics Inc.

ATTACHMENT A

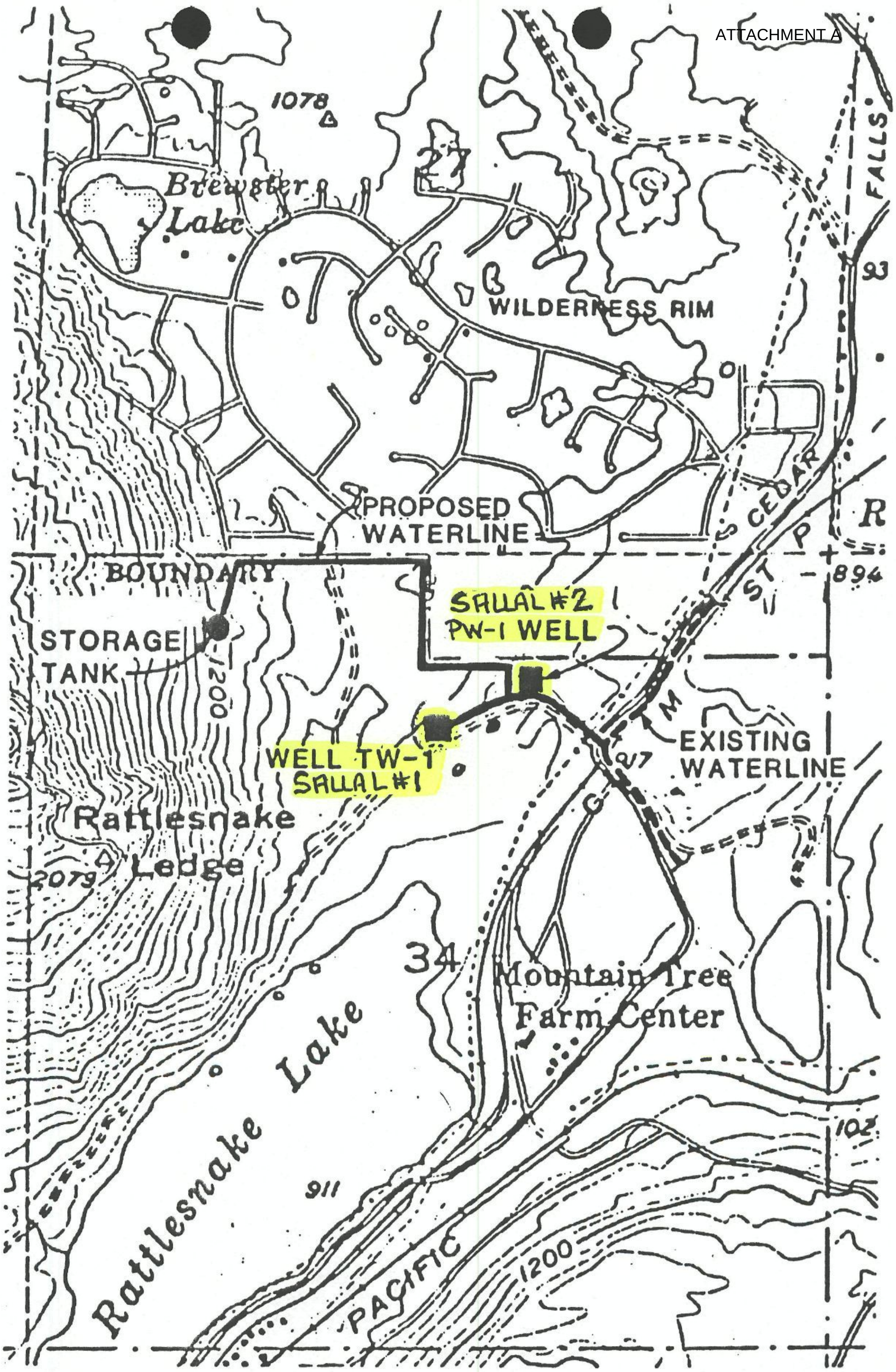

SCALE: 1": 1,000'

SEATTLE WATER DEPARTMENT
CEDAR FALLS IMPROVEMENTS
SALLAL WATER SUPPLY

APPENDIX C

SALLAL WATER ASSOCIATION’S BYLAWS AND RULES

Revised 12/86; 3/90; 3/08; 3/17

BY-LAWS
SALLAL WATER ASSOCIATION
A Consumer Owned Water Cooperative
Incorporated January, 1969

ARTICLE I
Memberships

Section 1] This corporation shall not have capital Stock, but its capital shall be represented by membership certificates. The Board of Trustees may determine that memberships may be issued in certificateless form.

Section 2] The membership shall be issued to each member and shall be numbered consecutively, in accordance with the order of issue. Each membership certificate and each certificateless membership shall bear or be deemed to bear on its face the following statements:

a. This membership is issued and accepted in accordance with and subject to the conditions and restrictions stipulated in the Articles of Incorporation and By-Laws and amendments to same of the corporation.

b. Transfers of membership certificates shall be made only upon the books of the corporation, only to persons eligible to become members as determined on the basis of the Articles of Incorporation and the By-Laws of the corporation and only when the member transferring is free from indebtedness to the corporation.

c. No member in this corporation shall be entitled to more than one vote at membership meetings, although it shall be permissible for an individual to hold more than one of the membership certificates of the corporation. Every member, upon becoming a member of this corporation, agrees to abide by the By-Laws and Rules and Regulations of the corporation.

ARTICLE II
Members

Section 1] Requirement for membership. Any person, firm, association, corporation, government or subdivision thereof, who is a bona fide owner of a parcel of land within the Corporation's water service area having a reasonable accessibility to the corporation's water system and who is in need of having water supplied for a legitimate and reasonable purpose may be admitted to membership upon subscribing for or otherwise acquiring a membership pursuant to these Bylaws, by signing such agreements as may be provided and required by the corporation and subject to such terms and conditions that the Board of Trustees may determine; provided that no person otherwise eligible shall be admitted to the corporation if the capacity of the corporation's water system is insufficient as determined by the corporation's Board of Trustee in its sole discretion.

Section 2] Transferability of Memberships. All transfers of membership certificates shall be made upon the books of the corporation upon the surrender of any certificates covering the same by the holder, thereof, or by their legal representative, only to persons eligible to become members as determined on the basis of these Bylaws, and only when the transferring member is free from indebtedness to the corporation. When a member sells or transfers the parcel of land to which a membership has been issued, the membership and all rights incident thereto, except as provided herein and to the extent authorized by law, shall automatically transfer to the new owner. The corporation may acquire or terminate memberships on such terms and conditions as may be determined by the Board.

Section 3] Jointly-held memberships. With respect to memberships in which more than one person has an interest and with respect to entity owned memberships, one person shall be designated by the member to vote the membership. Each membership shall be entitled to one vote; provided, however, if more than one membership is owned by a person or other entity, the owner of the memberships shall be entitled to only one vote regardless of the number of memberships owned.

ARTICLE III
Meetings of Members

Section 1] The annual meeting of this corporation shall be set at any convenient place, date and time in King County, Washington, by the Board of Trustees.

Section 2] Special meetings of the members may be called at any time by the action of the Board of Trustees and such meetings must be called whenever a petition requesting such meeting is signed by at least 10 percent of the members and presented to the secretary or to the Board of Trustees. The purpose of every special meeting shall be stated in the notice thereof, and no business shall be transacted thereat except such as is specified in the notice.

Section 3) Notice of annual and special meetings of members of the corporation may be given by a notice mailed to each member of record, directed to the address shown upon the books of the corporation, at least ten days prior to the meeting; provided that the corporation may provide such notice by electronic means to any member that has so directed in writing. Such a notice shall state the nature, time, place, and purpose of the meeting.

Section 4] Five percent of the votes which members are entitled to cast in person, by mail, or by proxy, at any meeting of the members shall constitute a quorum at any meeting of the corporation for the transaction of business.

Section 5] Members may vote in person, by mail or by proxy as follows:

a. At all meetings of members, a member may vote by proxy, executed in writing by the member. Such proxy shall be filed with the secretary before or at the time of the meeting. No proxy shall be voted at any meeting of the members unless it shall designate the particular meeting at which it is to be voted, and no proxy shall be voted at any meeting other than the one so designated or any adjournment of such meeting.

b. No person shall vote as proxy for more than one member at any meeting of the members and no proxy shall be valid after sixty days from the date of its execution. The presence of a member at a meeting of the members shall revoke a proxy before executed by him, entitling him to vote at such meeting in the same manner and with the same effect as if he had not executed a proxy.

c. A member may, as an alternate means to voting in person or by proxy, vote by mail on the items listed on the ballot included with the Notice of Meeting.

Section 6] Trustees of the corporation shall be elected at the annual meeting of the members.

ARTICLE IV
Trustees and Officers

Section 1] The Board of Trustees of this corporation shall consist of seven individual members in good standing of the corporation. A member in good standing is a member that has not been previously removed from the Board under Article IV, Sec. 6 of these Bylaws or by operation of law, or within the seven years preceding appointment or election, has not: (a) received a notice of disconnection of water service from the corporation, or (b) been determined by the Board (after notice and an opportunity for a hearing before the Board) to have violated any rule or bylaw provision of this corporation. At each annual meeting, the members shall elect for a term of three years the number of trustees whose terms of office have expired; provided, that, the terms of the Trustees shall be staggered so that, except in the event vacancies need to be filled, no more than three Trustees are subject to election at any one meeting.

Section 2] The Board of Trustees shall meet within ten days after the annual election of trustees and shall elect by ballot from among themselves, a president, vice-president, secretary and treasurer, each of whom shall hold office until the next annual meeting and until the election and qualification of his successor, unless sooner removed by death, resignation or for cause.

Section 3] If the office of any trustee becomes vacant by reason of death, resignation, retirement, disqualification or otherwise,. a majority of the remaining trustees, though less than a quorum, may, by *a* majority vote, choose a successor who shall hold office until the next regular meeting of the members of the corporation, at which time the members shall elect a trustee for the unexpired term or terms, provided that in the call of such regular meeting a notice of such election shall be given.

Section 4] A majority of the Board of Trustees shall constitute a quorum at any meeting of the board.

Section 5] Compensation for officers and trustees may be fixed at any regular or special meeting of the Trustees of the corporation.

Section 6] Officers and trustees may be removed from office in the following manner: Any member, officer, or trustee may present charges against a trustee or officer by filing them in writing with the secretary of the corporation. If presented by a member, the charges must be accompanied by a petition signed by ten percent of the members of the corporation. Such removal shall be voted on at the next regular or special meeting of the members and shall be effective, if approved, by a vote of a majority of the members. The trustee or officer against whom such charges have been presented shall be informed, in writing and shall have the opportunity at such meeting to be heard in person or by counsel and to present witnesses; and the person or persons presenting such charges against him shall have the same opportunity. If the removal of a trustee is approved, such action shall also vacate any other office held by the removed trustee in the corporation. A vacancy in the Board thus created may immediately be filled by a vote of a majority of the members present and voting at such meeting for the remainder of the unexpired term of the discharged director. A vacancy in any office thus created, shall be filled by the trustees from among their number so constituted after the vacancy in the board has been filled.

Section 7] To the extent authorized by law the corporation shall indemnify any person made a party to any proceeding by reason of the fact that such person is or was a trustee or officer of the corporation against judgments, penalties, fines, settlements and reasonable expenses actually incurred by such person in connection with such proceeding. Such reasonable expenses may be paid or reimbursed by the corporation in advance of the final disposition of such proceeding; provided that no such indemnity shall indemnify any such person from or on account of acts or omissions of such person finally adjudged to be intentional misconduct or a knowing violation of law, or from or on account of any transaction with respect to which it was finally adjudged that such person was not legally entitled. The Board may at any time, approve indemnification of any other person which the corporation has the power to indemnify under the law. The indemnification provided by this section shall not be deemed exclusive of any other rights to which a person may be entitled as a matter of law or by contract. Such indemnity shall continue as to a person who has ceased to be a trustee or officer and shall inure to the benefit of the heirs, executors, and administrators of such person.

ARTICLE V
Duties of Trustees

Section 1] The Board of Trustees, subject to restrictions of law, the Articles of Incorporation, or these By-Laws, shall exercise all of the powers of the corporation, and, without prejudice to or limitation upon their general powers, it is hereby expressly provided that the Board of Trustees shall have, and are hereby given, full power and authority in respect to the matters as hereinafter set forth:

a. To issue memberships in accordance with these By-laws and regulations that may be adopted from time to time by the Board and to cause to be issued appropriate certificates of membership.

b. To select and appoint all officers, agents or employees of the corporation or remove such agents or employees of the corporation at will, prescribe such duties and designate such powers as are consistent with these By-Laws, fix their compensation and pay for faithful services.

c. To borrow from any source, money, goods, or services, without limitation as to the amount of corporate indebtedness or liability, and to make and issue notes and other negotiable and transferable instruments, mortgages, deeds of trust, and trust agreements, and to do every act and thing necessary to effectuate the same.

d. To prescribe, adopt and amend, from time to time, such rules and regulations as, in their discretion may be deemed essential or convenient for the conduct of the business and affairs of the corporation and guidance and control of its officers and employees, and to prescribe adequate penalties for the breach thereof.

e. To order, at least once each year, an audit of the books and accounts of the corporation by a competent public auditor or accountant. The report prepared by such auditor or accountant shall be submitted to the members of the corporation.

f. To fix and alter the charges to be paid by each member for services rendered by the corporation to the member, and to fix and alter the method of billing, the time of payment, manner of collection, and penalties for late or nonpayment of the same. The Board of Trustees may establish one or more types of members.

g. To require all officers, agents, and employees charged with responsibility for the custody of any of the funds of the corporation, to give adequate bonds, the cost thereof to be paid by the corporation.

h. To select one or more banks to act as depositories of the funds of the corporation and to determine the manner of receiving, depositing and disbursing the funds of the corporation and the form of checks and the person or persons by whom the same shall be signed, with the power to change such banks and the person or persons signing such checks and the form thereof at will.

i. To levy assessments against the members of the corporation

j. To enforce the collection of the corporation's rates, charges and assessments in any manner that does not violate the laws of the State of Washington. Enforcement methods may include disconnection of services provided by the corporation and forfeiture of memberships and rights to memberships as allowed by law.

k. To establish reserves and to invest the funds thereof in stocks, bonds and other property as the Board of Trustees may deem necessary or satisfactory.

l. To buy, lease, hold, and exercise all privileges of ownership to all real or personal property as may be necessary or convenient for the conduct and operation of the business of the corporation or incidental thereto.

m.To enter into agreements, contracts, and other instruments with any person, firm, association, corporation, governmental body or subdivision thereof and to do every act and deed necessary to effectuate same.

n. To authorize any person to sign any or all contracts and other instruments in writing on behalf of the corporation.

o. To perform all acts and deeds deemed necessary and appropriate regarding the operation of the corporation.

ARTICLE VI
Duties of Officers

Section 1] Duties of the President. The president shall preside over all meetings of the corporation and Board of Trustees, call special meetings of the Board of Trustees, perform all acts and duties usually performed by an executive and presiding officer, and sign all membership documentation and such other papers of the corporation as he may be authorized or directed to sign by the Board of Trustees. The president shall perform such other duties as may be prescribed by the Board of Trustees.

Section 2] Duties of the Vice-President. In the absence or disability of the president, the vice-president shall perform the duties of the president; provided, however, that in case of death, resignation or disability of the president, the Board of Trustees may declare the office vacant and elect his successor.

Section 3] Duties of the Secretary and Treasurer.

a. The secretary shall have general charge and supervision of the records of the corporation; sign all such papers pertaining to the corporation as may be authorized or directed to do so by the Board of Trustees; serve all notices required by law and by these By-Laws and make reports of all matters pertaining to this office to the members at the Annual Meeting; supervise the keeping of the corporate records ; supervise the making of all reports required by law and perform such other duties as may be required by the corporation or the Board of Trustees. Upon the election of a successor, the secretary shall turn over all records and other property belonging to the corporation. The secretary shall also perform such other duties with respect to the finances of the corporation as may be prescribed by the Board of Trustees.

b. The treasurer shall have general charge and supervision of the books of the corporation; supervise the keeping of all financial records and the receipt of all revenues; supervise the making of financial reports to the Board of Trustees and those required by law; and perform such duties with respect to the finances as may be prescribed by the Board of Trustees. Upon the election of a successor, the treasurer shall turn over all books, records and other property belonging to the corporation.

ARTICLE VII
Benefits and Duties of Members

Section 1] The corporation will install, maintain and operate distribution pipelines and related facilities from the source of the water supply to the property line of each member of the corporation or such other location designated by the corporation, at which point, designated as a delivery point, a meter and shut-off valve will be installed, owned, operated and maintained by the corporation.

Section 2] Each member shall be entitled to purchase from the corporation water for domestic, livestock, garden, industrial, and/or commercial purposes that is determined to be reasonable in amount and available by the Board of Trustees subject to such rates, charges, rules and regulations as may be prescribed by the Board of Trustees.

Section 3] In the event the corporation's water supply is insufficient to meet the needs of the members, the corporation may allocate the water available among the various members on such basis as is deemed equitable by the Board of Trustees. The Board may also prescribe a schedule of hours covering the use of water and other restrictions, fines and penalties as it may determine necessary or advisable.

ARTICLE VIII
Distribution of Surplus Funds

Section 1] All funds from whatever sources remaining at the end of the year in excess of those needed to meet current losses and expenses may be distributed to members in proportion to the amount of business done by them during the year or may be retained for such purposes such as retiring indebtedness incurred in replacing, enlarging, or expanding the corporation's services, maintaining reserves for necessary purposes or reducing subsequent year's water rates.

Section 2] Upon dissolution of the corporation, gains from sales of appreciated assets will be distributed to all members during the period which the appreciated assets were owned by the corporation, in proportion to the amount of business done by those members during that period insofar as practicable.

ARTICLE IX
Amendments

Section 1] These By-Laws may be repealed or amended by a vote of a majority of the members present at any regular meeting of the corporation, or at any special meeting of the corporation called for that purpose. Notice of any amendment to be made at a meeting of the members must set forth the amendments to be considered.

RULES AND REGULATIONS
OF
SALLAL WATER ASSOCIATION
August, 2019

These Rules and Regulations are set forth in accordance with Article V, Section 1 of the By-Laws and may be revised, amended or otherwise changed at any time by action of the Board of Trustees ("Board") of the Sallal Water Association ("Association"). They are binding on the Association, its members and to persons and firms that desire to obtain a membership in Association. Copies of these rules shall be available for inspection and reference at all times at the office of the Association, or mailed upon written request.

1. APPLICATION FOR SERVICE: Each prospective member requesting water service shall sign the Association's required membership information forms. Credit references may be requested. If the application is for other than residential purposes, further information may be required from the applicant.

Becoming a member of the Association constitutes agreement and acceptance of the Association's Rules and Regulations.

2. MEMBERSHIP/FEES/DEPOSIT: Payment of membership, meter fees and line extension costs if applicable, and all other fees as appropriate shall be paid and registered on the Association books for new membership prior to delivery of water service except by agreement of the Board.

A deposit may be required from new members as a guarantee of payment of water service charges. This deposit may also be required from existing members who fail to maintain a satisfactory payment record. After six month's satisfactory payment record, this deposit will be applied to the water bill.

3. CHANGE OF OCCUPANCY: When a change of ownership or of legal responsibility takes place on any premises being served by the Association, notice of such change shall be given within a reasonable time prior to such change. The outgoing member will be held responsible for all service supplied until a transfer fee and any unpaid water service monies are received and applied to transferring member's account. The transferring member's meter will not be read unless specifically requested. If the meter is requested to be read, a fee in an amount established by the Board will be charged for this service. II it is not requested to be read, the standard final bill may include an estimated charge.

4. BILLING: Bills will be rendered monthly and are due and payable on receipt. Charges shall be considered to be delinquent if they are not paid by the 21st day of the month following issuance of the billing at which time a ten percent late payment penalty on such charges shall be assessed.

Non-users may elect to pay in advance annually, semiannually, quarterly or monthly.

Users must pay monthly, or in advance.

5. SERVICE CHARGES: Service charges may be levied for services as the Board may determine, including but not limited to the following:

A. Turn water on or off
B. Collection of an account
C. Disconnect for non-payment
D. Reconnect when payment is made
E. Meter check for accuracy by request from member
F. Request from member for services not normally rendered by the Association.

Service charges for the above purposes will be the actual cost sustained by the Association to perform same including amounts for administration or the amount fixed by the Board, whichever applies.

6. MEMBER'S PIPING AND EQUIPMENT: It shall be the member's responsibility to provide suitable protective equipment such as relief valves, pressure reduction valves, turn-offs, check valves and whatever other items may be necessary to protect the member's plumbing and equipment. The Association will make reasonable efforts to prevent pressure failure or abnormal pressure variations, but cannot guarantee that such conditions may not occur.

Member's piping shall be in installed in accordance with applicable plumbing codes. The Association reserves the right to refuse or discontinue service to a member where such equipment is in a hazardous condition, does not conform with lawful codes and local regulations, or where continuation of service could jeopardize or interfere with the operation of the Association's water system.

The members shall be solely responsible for the maintenance and safety of their plumbing, piping and equipment and the Association shall not in any way be liable for accident or damages occurring to the members or to third parties because of contact with, or failure of, any portion of members' plumbing, piping and equipment.

7. MEMBER'S RESPONSIBILITY FOR ASSOCIATION'S PROPERTY: It shall be the responsibility of the members to take all reasonable and proper precautions to prevent damage to the Association's water system. This shall include meters, instruments, services, connections, mainlines and any other equipment installed by and remaining the property of the Association. In the event that the Association's property is damaged by a member or a member's agent or independent contractor, then the member shall be responsible therefore.

8. RIGHT TO ACCESS: The Association's personnel shall have access to Association facilities at all reasonable times for the purpose of reading meters and testing, repairing, or replacing any facilities and equipment which is the property of the Association. If any such equipment and facilities are located in locked areas (which may only occur with Association's prior written consent), the Association shall be supplied with keys to such locks. The Association's personnel may use any means in their discretion to protect themselves from injury while attempting to read meters, or to repair, maintain or operate Association facilities and equipment.

9. SYSTEM DISTURBANCES: Water service shall not be utilized by any member in such a manner as to cause substantial disturbances or pressure fluctuations to other members of the Association. In the event that any member's manner of use of water is detrimental to the service of other members of the Association, that member may be required to changes its manner or amount of water use or install, at personal expense, regulative equipment as determined by the

Board.

10. INTERRUPTION OF SERVICE: The Association will use reasonable diligence to provide adequate and uninterrupted supply of water at normal pressure, but if the supply is interrupted without notice for any cause, the Association shall not be liable for injuries to persons or property or loss or damage resulting therefrom. The Association shall have the right to temporarily suspend service for the purpose of performing maintenance or making repairs or improvements to the system, but not in such cases, when practical, those affected will be notified in advance and reasonable efforts will be made to limit the duration of interruptions.

11. NOTICE OF TROUBLE: In the event that water service is interrupted, is not satisfactory or any hazardous condition is known to exist, it shall be the obligation of the member to notify the Association of such existing condition.

12. METER LOCATIONS: Meters will be installed by the Association in the public right of way or on easements granted to the Association at such locations as shall be determined by the Association. Meters shall not be installed places difficult to access, or where they may be subject to damage.

It shall be the responsibility of the members to advise the Association of their service requirements in advance of water service installation and to ascertain that the proposed meter location is acceptable to the Association. Only Association personnel are authorized to make the connection with a member's service line and the meter. Any unauthorized connection to a water service is illegal and an illegal use fee will be assessed according to the Association's rate schedule or as determined by the Board. It is the member's responsibility to advise all contractors, plumbers or subcontractors of the rules and regulations of the Association.

13. METER READING: The Association will use reasonable efforts to read meters on a monthly basis using the same approximate cycle date, but because of holidays, Saturdays, Sundays and the difference in the length of months, variations may occur. If for any reason a reading cannot be obtained for any particular period, the billing may be based on an estimated water use and be subject to later correction.

14. SECONDARY WATER SOURCE: No customer shall connect its plumbing, piping or equipment that receives water from Association's water system with that of any other water source.

15. DISCONTINUANCE OF SERVICE BY THE ASSOCIATION: The Association may refuse to connect or may discontinue service for violations of any of its Rules and Regulations, for failure to pay charges for water service when due or any other amount due under the rate schedule or otherwise, for theft, for illegal diversion of water, or for failure to pay any indebtedness or damages to the Association's property. The discontinuance of service for any of these causes does not release the member from any obligation to pay for water received or for any other charges specified in any contract or rate schedule. Members shall be given reasonable notice of a proposed disconnection except in emergency circumstances. Members shall have the right to a hearing before the Association's manager or Board, upon written request, prior to disconnection.

When service is discontinued for interference, theft, or illegal diversion, it can only be reconnected under the following conditions:

1. The member must pay all damages due to interference with the meter.
2. The member must pay for all outstanding charges,
3. The member must agree to comply with reasonable requirements to protect the Association from further loss.

16. EXTENSION POLICY: In order to receive water service, a member must extend an Association water main to the far end of the member's property at the sole cost of the member pursuant to a developer extension agreement duly approved by the Board. Developer extension agreements shall contain terms and conditions to ensure the proper installation of mains pursuant to designs and specifications approved by the Association's engineer. Members may be reimbursed for an equitable portion of the cost of a main extension if another member is permitted to connect to the portion of a main installed by a member. Reimbursement agreements are subject to Board approval on a case by case basis. The Association may agree, on a case by case basis, to install main extensions in which case the benefited members, as determined by the Board, shall pay the actual cost thereof, including a factor for interest, or charge based on a Board adopted rate in lieu of the actual cost. Costs related to responding to and reviewing a request for main extension shall be paid by the requesting party.

17. RATES: The Board may adopt and amend from time to time, without notice, a rate schedule setting forth all or part of the Association's rates and charges.

18. TAX ADJUSTMENT: The amount of any and all revenue, cubic foot, gallons or other form of tax imposed by any municipality. county, federal, state or other governmental subdivision taxing body, upon the property herein, revenue or income of any part of the Association may be apportioned by the Board of Trustees according to the territory in which such tax or taxes may be effective and amongst the various classes of service furnished therein and shall constitute any additional charge to any amounts which may be billed to any member under any rate schedule or special contract.

19. FIRE HYDRANTS: The use of fire hydrants shall be made available for the purpose of fire protection to members free of charge. Non-members shall have emergency use of fire hydrants, subject to a fee that may be established by the Board of Trustees. Fire hydrants will not be used by anyone for training or practicing fire fighting, without the prior approval of the Association. Unauthorized use of fire hydrants shall carry a minimum fine of $500 per occurrence.

20. BILLING INFORMATION: All members will be billed according to the information provided from the latest application and data sheet except as may be determined by the Association.

21. CONVERSION OF NON-USER MEMBERSHIP: After a meter is installed for a non-user member, the member shall no longer be considered to a non-user.

22. SERVICE CHARGE FOR MEMBER TRANSFERS: Transfers of membership will require a service charge as set forth in the Association's rate schedule and will be paid by the seller or transferring member as a condition to the transfer.

23. METER DROPS FOR PREVIOULSY PAID MEMBERSHIPS: Water service connections that are installed to tracts/lots by developers or others at the time of watermain extension, and that are not part of an Association financed improvement, require payment of a fee per meter installation drop according to the Association's rate schedule.

24. AUDIT REPORTS: The audit committee's or auditor's reports and suggestions, together with the Board's response and actions, the financial report and the minutes of the annual meeting are to be sent out to the membership along with the annual meeting notice.

25. REVERSION OF DELINQUENT NON-USER MEMBERSHIPS: In cases where delinquent charges against a non-user for amortization and base fees have accrued for one year, or where these same delinquent charges have exceeded the original cost of the membership, the membership will revert back to the Association subject to the following procedures. Members will be notified of the reversion and will have an opportunity to petition the Board and explain any circumstances relating to their case. The member will be given a period of time as determined by the Board to bring all past due indebtedness current. The decision of the Board is final. Failure to do so will result in loss of membership and automatic reversion to the Association. Reinstatement of membership at a later date will be subject to current membership fees, rules and regulations including a determination whether water service is available.

26. TURN-ON AND TURN-OFF FEES: A fee according to the Association's rate schedule will be imposed on members who request their water service to be turned off or turned on.

27. SHUT-OFF LETTERS AND RESUMPTION FEES: In cases where a member's water service has been discontinued for non-payment, a fee according to the Association's rate schedule will be imposed for resumption of service. A fee will be charged if a shut off notice letter is sent.

28. METER TAMPER FEE: In cases where a member or non-member deliberately breaks, unlocks or turns on their water service without the permission of the Association, a minimum fine will be imposed as set forth in the Association's rate schedule.

29. TYPES OF MEMBERS: The Association is made up of different 'types' of members: users, non-users and non-participators.

A USER is a member who has acquired a membership certificate in the Association and is connected to the water system and uses water.

A NON-USER is a member who has acquired a membership certificate in the Association but is not presently connected to the system.

A NON-PARTICIPATOR is a member that has acquired a membership certificate in the Association but is not presently connected to the system. Non-participating memberships are no longer available. Existing non-participating members acquired their memberships through specially negotiated arrangements. Non-participators are not subject to the amortization or water rate fees until such time as the membership is used, sold or otherwise conveyed. The membership then is reclassified as a user, or non-user,

If a member is a user, the Association shall furnish, subject to the limitation set out in the By-Laws and Rules and Regulations, a reasonable quantity of water as may be determined by the Board to the member's parcel in connection with the member's occupancy or other use disclosed to the Association in writing and approved by the Association.

Members shall pay for water and other services at such rates, time and place as shall be determined by the Association and shall pay penalties for non-compliance in the amounts set forth in the Association's rate schedule.

Non-User members shall pay amortization and base costs as set forth in the Association's rate schedule. The amortization cost is the amount set by the Association to pay the indebtedness to the United States Government and other designated uses. Said amount is established each year or from time to time and can be paid monthly, quarterly, semi -annually or annually. Different areas, divisions or additions may have different amortization costs. Amortization Costs are paid by all user and non-user members,

Base fees shall be due from all user and non-user members regardless of whether any water has been used or whether service has been disconnected.

30. RIGHT OF APPEAL: Any Association member may have the right to appeal to the Board of Trustees any dispute involving an Association claim, fee, charge or disconnection. A written appeal must be received by the Association's business office to be given to the Board at which time the member's concerns will be placed on the agenda for discussion at the next, scheduled Board meeting. Any member has the right to attend any meeting of the Board of trustees except for executive sessions. The time, date and place of the meeting can be obtained by calling the business office.

31. MEMBER LISTS: A list of member names and addresses is not to be made available to individuals or firms in any form unless required by law. Members may request a list of members and mailing addresses, in writing, for voting purposes only, and subject to Board imposed requirements and approval.

32. RETURNED CHECK FEES: A fee will be charged to cover cost of NSF and closed account returned checks.

33. BACKFLOW PREVENTION TESTING: Underground irrigation systems, fire suppression systems and all other listed devices of the Association require back flow prevention assembly per WAC 246-290-490. All backflow assemblies must be tested after the initial installation, repairs and once yearly thereafter. The Association will notify members annually when to have their backflow assemblies inspected by a licensed professional. The Association must be sent a copy of the test report.

Any member who does not comply with the backflow testing requirements will be subject to a minimum fine of $500 and water shut off. A reconnection fee will be imposed after a shut off. Thereafter, the member will be subject to the annual inspection not only by a licensed cross connection specialist, but also by the Association's Water System Superintendent.

Members wishing to disconnect their backflow assemblies must do so in the presence of the Association's water system superintendent. The member is then subject to the current rules and regulations governing backflow assemblies. Failure to comply with this sequence will result in the above mentioned fine and shut off policy.

34. IRRIGATION SYSTEM CONNECTION: Connections to irrigation systems must be installed a minimum of 10' from the meter.

35. ONE CONNECTION PER MEMBERSHIP/ERU: Unless otherwise specifically agreed to in writing by the Association and duly approved by motion of the Board of Trustees, a membership in the Association shall only entitle the membership holder the right to one connection for a single family residence or equivalent. One single family residence or equivalent means the average consumption of a single family residential home that is served by Association through a standard 5/8" x 3/4" water meter. The average annual water consumption by a single family residence that is connected to the Association's water system is hereby defined as an "equivalent residential unit" or "ERU." The Board may confirm the average ERU amount on a gallons per day basis from time to time.

36. ONE MEMBERSHIP FOR EACH PARCEL SERVED AND DEFINITION OF PARCEL: Prior to receiving a service connection, the owner of a parcel of land eligible for service from the Association must apply for a membership, execute all necessary documents, pay all fees required by the Association and be issued a membership. No more than one membership maybe issued for any one parcel. An applicant shall not be entitled to receive water service until Association approves the application and issues a membership. A parcel shall be considered as a separately identified parcel of land as recorded in a duly approved plat map or equivalent with King County. Condominium units, apartment units, townhouse units and individual buildings of any nature located on a parcel shall not be eligible for separate memberships.

37. SERVICE CONNECTIONS PER PARCEL: Water received through a service connection and meter may only be used on the member's designated parcel and for the improvements and uses authorized thereon by the Association. The Association may, subject to review by the association's engineer and in the sole discretion of the Board, authorize more than one service connection and water meter to a parcel subject to the following guidelines:

- Situations in which more than one service connection and meter may be authorized are:
  - To serve multiple ownership housing units, such as condominiums or townhouses,
  - To serve physically separate commercial enterprises or structures within a business park,
  - To serve a physically separate auxiliary housing unit(s).
  - To serve a physically separate structure utilized for home business.
  - For irrigation purposes (subject to special conservation guidelines and rates as may be adopted from time to time),
- Where multiple service connections and meters are authorized, membership and meter charges shall be based upon the combined system demand for all connections and meters.
- Where an additional service connection is requested for an existing served parcel, the member shall be charged an additional membership and meter fee for the incremental increased system demand.

38. SERVICE CONNECTION LINE AND METER SIZING, COMPONENTS, AND ADJUSTMENTS TO CHARGES BASED ON POTENTIAL SYSTEM DEMANDS:

a. Initial Sizing. A member requesting a service connection shall be responsible for securing the services of a registered plumber or Registered Professional Engineer for determination of required service line and meter sizing in accordance with applicable plumbing codes for all commercial, industrial and multi-family residential applications, subject the following:

- The 5/8” x 3/4” meter shall be the minimum size accepted for all services,
- All other service line components shall be sized in accordance with the applicable codes,
- The basic water service shall be considered to consist of the service tap into the water main arid its associated shut-off valve, the service line from the main to the meter (or meter setter), a shut-off valve at the meter (either as a separate valve or contained in the setter), and time water meter

b. Modifications. Any changes in land use on a parcel with service connection that will cause an increased water system demand shall be subject to reevaluation of meter size(s) and may require the Member to apply for a modification to the existing service or additional services and pay additional membership and meter charges based upon the new meter size or number of meters required to provide the service. Approval of such modification shall in the sole discretion of the Board and subject to the Association’s rate schedule, Rules and Regulations.

c. Sizing Guidelines and Calculations. The Association shall use the following Table I for sizing guidelines for meters and service connections:

Table 1
Water Meter Size-Capacity Multipliers

Meter Size	Safe Maximum Operating Capacity – gpm	Multiplier (in ERU’s)
5/8” by 3/4”	20	1.0
¾-inch	30	1.50
1-inch	50	2.50
1-1/2-inch	100	5.0
2-inch	160	8.0
3-inch	320	16.0
4-inch	500	25.0
6-inch	1,000	50.0
8-inch	1,600	80.0
Larger than 8-inch	To be determined by Board	To be determined by Board

1. The multipliers are based upon safe maximum operating capacity, and thus the potential demand upon the Association’s system, for various sizes of meters as established in the following American Water Works Association (AWWA) Standards:

- For meter sizes 5/8” by 3/4” through 2-inch —-AWWA Standard C700 for Cold-Water Meters Displacement Type Bronze Main Case

- For meter sizes 3-inch through 8-inch — AWWA Standard C702 for Cold-Water — Compound Type -Class 1
- For meter sizes larger than 8-inch — AWWA Standard C70l for cold-Water meters — Turbine Type — Class II

39. PURPOSE OF USE: The primary purpose of the Association is to provide water service within its service are for potable use. Non-potable uses of water shall only be made available if the service will not interfere with existing and future demands for potable uses on the Association's water system.

Potable use is water that is distributed to homes, multi-family developments, businesses, governments and others for human consumption in the Association's service area and includes moderate amounts of irrigation water for usual and customary landscaping (except when curtailment is required) and fire protection for which the Association may levy a separate charge.

Non-potable use is water that is primarily or substantially used for agriculture, silvaculture, mining, rock and gravel crushing and cleaning, lumber mills and mill ponds, industrial manufacturing and similar non-drinking water purposes.

The Board shall review all applications for non-potable uses and determine, in its sole discretion, whether water is available for a non-potable use. The Board may, as a condition the approval of a non-potable use, limit the amount, duration, timing, geographical limits and particular use, and may set special rates and impose other appropriate requirements.

40. APPLICATIONS FOR MEMBERSHIPS AND WAITING LIST: The Association will issue memberships subject to the following:

1. Parcels eligible for water service must be located within the Association's water service area as determined by the East King County Coordinated Water System Plan or the Association's Water System Plan and have an existing and actual need for water service from Association or a need that is based on development plans which the parcel owner is prosecuting in good faith. If a parcel spans the Association's water service boundary, the Board may determine whether the parcel or a portion of the parcel is eligible for service

2. Water service to a particular parcel is further subject to engineering, financial and legal feasibility and the conditions to service as contained in RCW 43.20.260.

3. All applications for membership and service connections shall be presented in person at the Association office utilizing Association's forms and shall be accompanied by payment of all fees, complete and true information on the parcel and the improvements to be served (for non-single family applications, the information must include a description of the number of ERUs requested, the estimated size of the meter and estimated average daily use projections) and a nonrefundable fee as set forth in the Association's rate schedule to cover the Association's administrative costs in processing the application. A separate fee may be levied initially or from time to time as compensation for maintaining the applicant's place in line for membership issuance. The Association may reject incomplete or inaccurate applications and applications submitted for speculative or illegitimate purposes as determined by the Board.

4. In order for the Association to issue a membership for a parcel, the application must be complete and based on development plans reviewed and approved by the applicable land use

authority, all fees paid, and there must be available in the Board's determination a sufficient number of ERUs of water supply capacity to satisfy the applicant's proposed use of the parcel. If there is an insufficient number of ERUs available to satisfy the application for membership, (a) the applicant may withdraw the application, (b) the applicant may elect in writing within ten (10) business days after notification of the insufficiency to be placed on the Association's waiting list, (c) the member may reduce its plan for the proposed improvements and accept the number of ERUs available in full satisfaction of the application, or (d) the Association may deny the application. In any such events, the Association may process subsequent applications and issue memberships to applicants whose number of ERUs do not exceed the amount available.

5. The Association shall maintain a waiting list for persons and firms requesting memberships and certificates of water availability for parcels in which sufficient water is not available and who have requested, in writing, and are eligible to be placed on the waiting list. The waiting list shall identify each property owner's parcel, the number of equivalent residential units of water requested based on development plans determined to be feasible by the Association, and the date the owner requested to be placed on waiting list. Such date shall establish the priority of the property owner's right to receive water in case sufficient water becomes available. The Association may query each owner on the waiting list from time to time to determine whether the owner has a true and feasible need for water supply. The Association may remove owners from the waiting list whose need for water is determined by the Association's Board of Trustees to be speculative, unrealistic or infeasible or who, after reasonable inquiry do not appear to be prosecuting their developments with reasonable diligence, cannot be located or are unresponsive. The Association may establish fees for placement and retention on the waiting list. Failure to pay the fees in a timely manner shall be grounds for removal from the waiting list. If and when water become available to applicants on the waiting list, the membership application provisions set forth above (and Rule 41 with regard to applications for certificates of availability) shall apply.

6. If the Association makes available additional ERUs, the Association shall first consider applicants based on their respective order on the waiting list starting with the earliest application. If an applicant declines to accept a membership or certificate of availability if and when it is offered, the application and the applicant's place in line on the waiting list, if applicable, shall be cancelled and the ERU's offered to less senior applicants in line, provided that, if the membership offer is less than the amount of ERUs applied for, the applicant may elect in writing to remain on the waiting list in the same relative position taking into account acceptances by less senior applicants on the waiting list.

7. Subject to the waiting list provisions above, issuance of memberships shall be on a first come, first served basis, meaning that an applicant that has fully performed the application procedures and paid all fees and deposit shall be considered for membership prior to the consideration of a subsequent application. Once a membership is offered to an applicant, the applicant shall have ten (10) days within which to accept the offer. Except as provided above, if the applicant does not accept the offer within ten (10) days, the offer shall be deemed to be rejected and the application shall be null and void.

8. Memberships, applications for membership and places on the waiting list shall be appurtenant to the parcel for which the application is made and shall, upon application to and approval by the Association, transfer to the purchaser of the parcel that is vested with record title. Memberships, applications and places on the waiting list shall not otherwise be sold, transferred or assigned and the Association shall have no obligation to honor any attempt to sell, transfer or

assign such rights. In the event of cancellation, memberships, applications for memberships and places on the waiting list shall be terminated and have no further force of effect.

9. If an application for membership is withdrawn, invalidated, cancelled or voided at any time prior to the issuance of a membership, the applicant's application fee shall be forfeited and retained by the Association. Forfeiture of the application fee shall also apply in the event the applicant is offered a membership but declines to accept it unless the application transferred to or remains on the waiting list.

10. Unless the Association has otherwise entered into contractual arrangements providing different terms, the Association may, but shall have no obligation to cancel an unused but issued membership and refund all fees paid less the sum of 10% of such fees or $5,000, whichever is less which amount shall be retained by the Association as a non-refundable administrative fee, if the membership has not been put to actual use (meaning a meter has been installed and through which water service is being provided) within two years from the date of issuance of the membership. The Association shall issue a written notice thirty days prior to taking such action. The member may request a hearing from the Board if it desires to contest the cancellation. After the hearing, the Board may cancel the membership unless member shows good cause as to why it did not install the service connections and meters within such two year period and shows a credible plan to make such installations within a time to be determined by the Board, but not more than two years. If the member shows good cause and a credible plan, the Board may extend the date with respect to which the member shall install the service connections and meters for up to two additional years. The Board's determination in such matters shall be final and binding upon the member.

11. Upon cancellation of a membership, the number of ERUs associated with that membership shall automatically be deemed forfeited and waived and the former member shall have no rights to receive water from the Association.

12. The Association's General Manager is authorized to implement the foregoing provisions and make necessary adjustments when inequity or unfairness would otherwise result.

41. CERTIFICATES OF WATER AVAILABILITY:

Certificates of Water Availability (C/A) will be issued only to persons and other entities that have met all applicable requirement of the Association including but not limited to, have been issued or are eligible to be issued a_ membership in the Association for service to existing improvements or to proposed improvements within the Association's water service area that the applicant will build in accordance with the requirements of applicable land use and building codes, and that have paid the requisite fee as set forth in the Association's rate schedule. C/A's shall not exceed the number of requested ERUs actually needed or available as determined by the Association. Specific procedures pertaining to C/A's are as follows:

1. The C/A will be valid for a period of one year, expiring automatically unless the applicant applies for and receives in writing, as approved by the Board, an extension of time one year period prior to the date of expiration,

2. An extension of the C/A for not more than one year may be granted by the Board subject to the following. The applicant shall advise the Association of the need for an extension at least sixty (60) days prior to the date of expiration of the C/A, and shall present to the Association true, correct and verifiable documentation of the status of each jurisdictional review process and response by the applicant to all requests for information by the land use permitting jurisdiction(s) involved, The Member shall demonstrate just cause, as determined by the Board, with respect to

its need for an extension. Factors considered by the Board, in whether just cause exists shall include whether the member has demonstrated diligence in designing proposed improvements and in applying for and prosecuting all necessary building and land use permits. Written documents will be necessary to prove just cause. Extensions to a C/A will not be granted for delays caused by the applicant's failure to diligently pursue the proposed project, or for purposes of speculation or selling of the project or property.

3. Upon receipt of all permits and approvals necessary to proceed with the physical improvements associated with the development, the holder of a C/A shall, within 60 days of receipt of the last permit, apply to Association for a membership and a service connection, or if required, a developer extension agreement and pay all fees at Association's rates then in effect.

4. All C/A's that expire shall become null and void and have no further force or effect. The holder of an expired C/A may reapply for a C/A as if no C/A had been original issued.

42. LEAK RELIEF FOR RESIDENTIAL OR COMMERCIAL USE: Eligible members may receive one leak relief adjustment to one bill once in a ten year period. This relief applies to both potable use and irrigation systems. If a leak has been documented and fixed in accordance with the provisions below, the Association will determine the member's normal usage based on account history for the month in question and charge the standard rates for that amount. The excess amount of water usage shall be charged as follows: Up to 10,000 cubic feet shall be charged at the regular residential second tier rate; and amounts in excess of 10,000 cubic feet shall be charged at the regular residential fourth tier rate. Base and amortization fees remain the same and are fixed per meter size. The regular tax fee will be charged on the adjusted total bill in accordance with the current tax rate.

Members who wish to take advantage of this one time in ten year relief program must submit a letter to the Association requesting relief. Members must describe when the leak occurred and provide proof that the leak was fixed either by submitting the invoice from a licensed professional or by providing a statement that the member fixed the leak himself/herself.
No leak relief will be granted to Wholesale members.

APPENDIX D

DEVELOPMENT STANDARDS

ATTACHMENT A

SALLAL WATER ASSOCIATION

KING COUNTY WASHINGTON

WATER SYSTEM DESIGN AND CONSTRUCTION STANDARDS

G&O #17407
DECEMBER 2017

Gray & Osborne, Inc.
CONSULTING ENGINEERS

ATTACHMENT A

TABLE OF CONTENTS

MISCELLANEOUS FORMS

STANDARD DETAILS

GENERAL

The standards established by this chapter are intended to represent the minimum standards for the design and construction of water system facilities. Greater or lesser requirements may be mandated by the Sallal Water Association (Association) due to localized conditions. Extensions, connections or modifications to the existing system shall be in compliance with the State Department of Health and Association standards.

For developer extensions, off-site improvements to the existing system may be required based on: (1) the condition and capacity of the existing water system; and (2) impacts caused by the proposed development. These off-site improvements (in addition to "on-site improvements) shall be completed as determined by the Association Engineer to mitigate impacts caused by the development.

DEVELOPER AND CONTRACTOR AGREEMENT REQUIREMENTS

All land and building developers, their contractors and others, whether persons or entities, constructing water systems, or additions thereto, to be connected to existing water lines of the Association, shall, as a prerequisite to securing approval for the construction of such system, apply for a Developer Extension Agreement. Contractors working on an Association sponsored or let project shall have an executed a construction contract with the Association.

DEFINITIONS

Association – The Sallal Water Association, or its designated representative.

Engineer – The Engineer under contract to the Sallal Water Association.

Developer – The project's sponsor or designee employed by or contracted by the land owner to act as the Developer.

Contractor – If the project is sponsored or let by the Association, requirements of the Developer, as referenced herein, shall apply to the Contractor hired by the Association unless otherwise noted in the Contract between the Association and its Contractor, specific to the project. The Association will prepare plans and specifications as a part of a construction contract for all Association let projects.

Developer Extension Agreement – An agreement between the Association and the Developer.

Work – All work associated with the water main extension.

DESIGN STANDARDS

The design of water system improvements shall depend on their type and local site conditions. The design elements of water system improvements shall conform to Association Standards as set forth herein.

For Developer sponsored extensions detailed engineering plans shall be submitted to the Association for review. Such Plans shall provide the locations, size, and type of the proposed water system and points of connection. (See Drawing Standards). Association Standard Details shall be used, unless an alternate detail is approved by the Association. All Plans submitted to the Association for review shall be completed by an engineer licensed in the State of Washington.

Computations and other data used for design of the water system shall be submitted to the Association for approval.

The design and construction plans and specifications may also be subject to the approval of the State of Washington Department of Health, the King County Fire Marshal, King County (pursuant to King County Road Standards, King County Surface Water Design Manual, King County Clearing & Grading, and other provisions of the King County Code), the City of North Bend (if applicable) and other agencies.

Material and installation specifications shall contain appropriate requirements that have been established by the industry in its technical publications, such as ASTM, AWWA, WPCF, and APWA standards. Material and construction standards are set forth in this document.

Unless otherwise approved or required by the Association the water main shall be ductile iron, pipe class as shown below. The minimum nominal size for water mains shall be 8 inches, unless otherwise approved/required by Association Engineer. All pipe installations, including service lines, shall be in accordance with Association standards.

Water Main Thickness

Class	Pipe Diameter
Class 52	4" through 14"
16" and larger	Class 50

EXCEPTION: 6-inch hydrant spools and pipelines located beneath rock or retaining walls shall be Class 53.

All fittings shall be cement-lined ductile iron.

Water mains shall be laid only in dedicated streets, rights-of-ways or easements shown on preliminary plats or which have been granted to the Association. A street is normally not considered dedicated until the plat which created it has been officially filed with the County Auditor.

The minimum separation for sanitary sewer and storm sewer lines parallel to the Association water mains is 10 feet. In addition, the water main shall be 18 inches above the sewer and storm main. The minimum separation for all perpendicular crossings is 18 inches, with the sewer and storm mains passing under the water main. Under special circumstances the separation may be reduced with approval from the Association. Special construction may be required such as placement of CDF between the utilities.

Easements shall be a minimum of 15 feet in width. The water main shall be a minimum of 5 feet from the edge of the easement.

One water sample station is required for developments in size of one to ten lots. One additional station is required to be furnished and installed for each additional 50 lots or portions thereof.

All water main distribution pipeline construction shall have a minimum 36-inch cover. Mains shall generally be located 10 feet north or east of street centerline. Water mains shall be extended to the far property line(s) of the property being served. Off-site extensions may be required to hydraulically loop existing and new systems. Oversizing of water mains may be required to be installed per Association’s current Water System Comprehensive Plan.

Fire hydrants are generally required approximately every 500 feet in residential areas, and every 300 feet in commercial areas. However, fire hydrants shall be furnished and installed at all locations as specifically mandated by the local fire marshal and/or per Appendix C of the International Fire Code.

Fire hydrants on dead end streets and roads shall be located within approximately 250 feet from the frontage center of the farthest lot, or less if the Fire Code or Fire Marshal requires it. Distances required herein shall be measured linearly along the street, road or easement as applicable.

Valves shall be installed on each leg of all tees and crosses except fire hydrant tees. Inline valves shall be on the water main at intervals of 500 feet or less in commercial or multi-family areas and 1,000 feet or less in single-family areas (or as otherwise approved by the Association).

Pipes connecting hydrants to mains shall be at least 6 inch in diameter and be less than 50 feet in length.

Dead end lines are not permitted except when in the Association's opinion it would be impractical to extend the line at a future date. Water mains on proposed cul-de-sacs or dead-end roads shall extend to the plat line beyond the end of the road to neighboring property for a convenient future connection. Extension to an existing water main to create a hydraulic loop is generally required. Dead end water mains, if allowed, shall be terminated with line size tees with 6-inch side outlets, thrust blocks, and a blowoff assembly or fire hydrant from a 6-inch outlet. Blowoff assemblies shall be 2 inch for 8-inch diameter water mains and 4 inch for water mains larger than 8-inch diameter.

Bends shall be included in the design as needed to maintain proper depth and spacing from other utilities. Bends shall be utilized so as not to exceed allowable deflection at pipe joints in accordance with pipe manufacturer's recommendations.

Thrust blocking and/or restrained joints with appropriate restrained length of pipe shall be required at all fittings and bends in accordance with the Association standards and conditions.

Water meters and water meter boxes shall be within the right-of-way or easement abutting, and parallel to the right-of-way. Service pressure reducing valves are required if the static water pressure exceeds 80 psi. The service pressure reducing valves shall be located on the private property side of the water meter.

All commercial, multi-family, industrial and irrigation services shall include a DOH approved backflow prevention device located immediately behind and on the property side of the water service box.

Special construction, such as restrained joint pipe or high density polyethylene pipe may be required in site sensitive areas identified by Developer or Association.

DRAWING STANDARDS

The drawings shall be referenced to NAVD 1988 and NAD 83/91 and shall include at a minimum two existing utility features such as sanitary or storm sewer manholes or catch basins, water valves or fire hydrants or County/State monuments.

a. Cover sheet showing entire property and location of improvements.

b. Existing and proposed location of streets, curb, gutter and sidewalk, rights-of-way, easements, property lines, utilities and improvements

c. Legal Description of the property to be served.

d. Stationing or pipe lengths for all improvements to be constructed.

e. Existing and proposed grades of streets, easements and areas of improvements.

f. Match lines and title blocks for each sheet.

g. North arrow and engineering scale on each sheet.

h. Horizontal scale of 1"=30' (or as otherwise approved by Association).

i. Construction drawings shall be signed and dated by a Professional Engineer registered in the State of Washington.

j. Standard notes for water system construction shall be included with construction drawings.

k. Approval block for Association signature shall be included on each sheet of the water utility construction drawings.

APPROVED FOR CONSTRUCTION
SALLAL WATER ASSOCIATION

By: ________________________ Date:____________________

Title: ___________________

l. The Association's Standard Details for water system construction shall be included in with construction drawings as appropriate.

m. All Plans shall be ink on a reproducible bond paper 22" x 34", and one-half size 11" x 17". Additionally, the plans shall be submitted electronically in PDF file format. All existing and proposed utility improvements shall be shown. All new or proposed water improvements shall be depicted by a heavy solid line. All existing water improvements shall be depicted by a thin or dashed line. All Plans shall be plan view and profile drawings to show relationship to other underground utilities and where the water line shall cross railroad tracks, streets, rivers and drainage ditches and any other places where it would clarify construction. When more than one sheet is required to cover all of the construction area, an overall drawing will be required. Plan drawings shall be prepared in a manner consistent with industry standards based on the scales and details set forth herein, provided that the Association may require additional details and different scales in its sole discretion.

n. All information including, but not limited to, lot lines, buildings, rights-of-way, other utilities, contours, etc., shall be shown. All valves, fire hydrants, fittings, bends and other appurtenances shall be called out and fully located by stationing along centerline of street, or base line of easements, etc.

o. Drawing symbols and line types shall conform to the APWA WSDOT CAD Standards.

CONSTRUCTION REQUIREMENTS

Except as otherwise noted herein, all work shall be accomplished as recommended in applicable American Water Works Association (AWWA) Standards, and according to the recommendations of the manufacturer of the material or equipment concerned.

Prior to final inspection, all water mains shall be tested and disinfected. Testing and disinfection shall occur after installation of service lines.

A Preconstruction Conference is required prior to beginning construction. The conference must precede the beginning of construction and include the Association, the Developer, contractor, design engineer, utilities, and the agency issuing the permits. Plan approvals and permits must be in hand prior to the conference. The Preconstruction Conference shall be scheduled by the Developer.

Work shall be performed only by contractors experienced in laying public water mains.

The Association may cause the Plans to be modified by the Developer before or during the course of construction in the event of changes in circumstances, land use, zoning, unforeseen conditions, or for any other reasonable cause to ensure proper facility construction in accordance with the Association’s policies and standards or other regulatory directives from Federal, State, or Local agencies. Developer shall have no recourse against Association in such event for recovery of increased construction or related costs resulting from modifications to the Plans.

SURVEY STAKING

All surveying and staking shall be performed by an engineering or surveying firm employed by the Developer and capable of performing such work. The engineer or surveyor directing and/or performing such work shall be currently licensed by the State of Washington to perform said tasks.

A preconstruction meeting shall be held with the Association prior to commencing staking. The Developer shall be responsible for all construction. All staking shall be inspected by the Association prior to construction.

The minimum staking of water systems shall be as follows:

A. Stake alignment every 100 feet. Staking shall be sufficient to satisfy Association Water Superintendent.

B. Stake locations of all proposed fire hydrant, blowoff, air-vacuum release valves, valves, meters, etc.

The Developer shall provide a minimum of 24 hours advance notice in writing to the Association requesting that the construction staking be inspected. Working operations may be suspended by the Association, without liability to Association, for such brief and reasonable time, as may be required, for the giving of lines and grades, and the taking of measurements.

The Developer shall not proceed with construction until such time as the construction staking has been completed and inspected by Association.

Any restaking, for whatever reason, as well as additional staking which the Association may desire, will be performed promptly by Developer. The Association may, but is not required, to evaluate the effectiveness of survey controls and require it to be strengthened at Developer's expense if it is found to be in adequate in Association's sole judgment. All control staking shall remain in place throughout the duration of the project. Any control staking that is moved or disturbed shall be reinstalled prior to completion of the work.

In the event of questions or discrepancies in survey control points, the Developer's engineer shall evaluate the control points and require substantiation when it determines necessary. If Association consents, Association's engineer may perform the staking at Developer's request and cost. The Association's engineer may review all survey and staking work performed by Developer's surveyor.

All stakes, benchmarks, and reference points shall be carefully preserved by the Developer. In the case of their destruction by the Developer or Developer's Contractor or any of his employees, such stakes and marks will be replaced at the Developer's expense.

Prior to acceptance of the work, Association may, at Developer's expense, use a locating device to inspect the alignments and locations of all pipe and other facilities installed by Developer. Upon written request from Developer, the Association may, in writing, relieve Developer from performing such portions of the foregoing requirements relating to staking which Association deems burdensome and unnecessary.

ACCESS

The Association at all times shall have access to the Work and to the locations where the Work is in preparation. The Developer at all times shall maintain proper facilities for such access. Where applicable, the Developer shall also provide proper facilities for access to all Work sites for inspections by representatives of Federal, State, and local regulatory agencies.

UTILITY TRENCH EXCAVATION

Clearing and grubbing where required shall be performed within the easement or public right-of-way as permitted by the Association and/or governing agencies. Debris resulting from the clearing and grubbing shall be disposed of by the Developer in accordance with the terms of all applicable permits.

Trenches shall be excavated to the line and depth designated by the Association to provide a minimum of 36 inches of cover over a water pipe. Except for unusual circumstances where approved by the Association, the trench sides shall be excavated vertically and the trench width shall be excavated only to such widths as are necessary for adequate working space and in compliance with all safety requirements of the prevailing agencies. The trench shall be kept free from water until joining is complete. Surface water shall be diverted so as not to enter the trench. The Developer shall maintain sufficient pumping equipment on the job to ensure that these provisions are carried out.

The Developer shall perform all excavation of every description and whatever substance encountered and boulders, rocks, roots and other obstructions shall be entirely removed or cut out to the width of the trench and to a depth 6 inches below storm line grade. Where materials are removed from below the pipeline grade, the trench shall be backfilled to grade with material satisfactory to the Association and thoroughly compacted.

Trenching and shoring operations shall not proceed more than 100 feet in advance of pipe laying without specific written approval of the Association, and shall be in conformance with Washington Industrial Safety and Health Administration (WISHA) and Office of Safety and Health Administration (OSHA) Safety Standard.

BACKFILLING

The bedding course shall be completed in such a manner that the pipe will have bearing along the entire length of the barrel. The bell holes shall be excavated with hand tools to sufficient size to facilitate the construction of pipe joints.

Backfilling and surface restoration shall closely follow installation of pipe so that not more than 100 feet is left exposed during construction hours without approval of the Association and the permitting Agency. Selected material shall be placed and compacted around and under the utility pipe by hand tools. Special precautions should be provided to protect the pipe to a point 12 inches above the crown of the pipe. Backfill shall be compacted to 95 percent of the maximum density. At a minimum the upper 6 inches of the trenches within rights-of-way shall be completed with Crushed Surfacing Base Course (1-1/4 inch minus) below the asphalt. The backfill and compaction shall be done to the satisfaction of the agency having jurisdiction.

At a minimum, trench sections longitudinal to the roadway shall be completed with Bank Run Gravel for Trench Backfill or suitable excavated material as determined by the Association. Trench sections crossing existing roadways shall be backfilled and compacted with 100 percent Crushed Surfacing Base Course. The Association may require CDF backfill for utility trenches crossing under roads based upon localized conditions and traffic loading. All excess material shall be loaded and hauled to waste.

Road restoration shall be per requirements of the governing agency. Developer shall become familiar with all City, County, State and Association conditions of required permits, and shall adhere to all conditions and requirements.

INSPECTION

The Association shall exercise full right of inspection of all excavating, construction, and other invasions of rights-of-way or public easements. The Association shall be notified two working days prior to commencing any work in the right-of-way or public easements. The Association is authorized to and may issue immediate Stop Work Orders in the event of noncompliance with this chapter and/or any of the terms and provisions of the permit or permits issued here under.

Timely notification by the Developer as noted herein is essential for the Association to verify through inspection that the work meets the standard. Failure to notify in time may oblige the Association to arrange appropriate sampling and testing after-the-fact, with certification, by a professional engineer. Costs of such testing and certification shall be borne by the developer. At the time that such action is directed by the Association Water Superintendent, he may prohibit or limit further work on the development until all directed tests have been completed and corrections made to the satisfaction of the Engineer.

Inspection and test of work and materials shall be in accordance with Association and other regulatory requirements and standards, and shall be strictly for the benefit of the Association. No approvals, comments or suggestions issued by the Association shall be construed to relieve the Developer of any obligations under the Contract. All construction shall be subject to full time inspection at the sole discretion of the Association and other regulatory agencies at the sole cost of Developer.

The following scheduled inspections and tests shall be conducted by the Association's engineer or designee:

- Start of construction inspection.
- Scheduled inspections during the course of the work.
- Test inspections. (Note: The Association's representative shall collect bacteriological samples after the extension has passed all pressure tests.)
- Final inspection.
- End of Warranty Period inspection (to be conducted at least two weeks prior to expiration of Warranty Period).

Inspection of all water works and associated trenching and backfill will be done by the Association. Unless otherwise instructed by the Association, construction events which require monitoring or inspection, are identified as follows:

- Clearing and Temporary Erosion/Sedimentation Control. One working days' notice prior to initial site work.
- Utility Installation. One working days' notice prior to trenching, water utility installation and backfill.
- Crushed Surfacing Placement. One working days' notice to check placement and compaction of crushed surfacing base course and top course.
- Paving. Three working days' notice in advance of paving with asphalt or Portland cement concrete.

The Developer shall give the Association timely notice when the state of the Work is such that a scheduled inspection and test can be conducted. When the inspection and test is to be conducted by authorities other than the Association, the Developer shall coordinate all inspection arrangements through the Association.

The Developer shall furnish such samples, testing, and labor as may be required for the Association to make a thorough inspection and examination of materials to be used in the Work. Failure on the part of the Association to condemn or reject inferior material or work shall not be construed to be acceptance of the materials or the work.

The Association shall have the right to reject materials and workmanship which are defective, or to require their correction. Rejected workmanship shall be promptly corrected, and rejected materials shall be removed from the premises.

Should it be necessary for the Association, prior to final acceptance of the work, to make an inspection or reinspection of Work already completed by removing or tearing out any portion thereof, the Developer shall on request, promptly furnish all necessary facilities, labor and materials to do so.

The Developer is responsible for all costs of inspection and testing for Association to determine that the installation of the Extension is performed in accordance with all Association standards and requirements.

Other scheduled inspections and tests may be required to comply with Association standards, laws, or ordinances. Some inspections and tests may be conducted by a person or firm designated by the Association who has special expertise in the kind of work to be inspected.

Prior to final approval of construction, a visual inspection of the job site will be made by the Association. Restoration of the area shall be complete with all improvements being restored to their original or superior condition.

WATER MAIN INSTALLATION

Pipe and fittings shall be loaded and unloaded using hoists and slings in a manner to avoid shock or damage, and under no circumstances shall they be dropped, skidded, or rolled against other pipe. Damaged pipe shall be rejected, and the Developer shall immediately place damaged pipe apart from the undamaged and shall remove the damaged pipe from the site within 24 hours. All water pipe shall be delivered to the site with both ends capped. The caps shall remain securely on the pipe until it is installed, except as noted below.

Pipe shall be stacked in such a manner as to prevent damage to the pipe, to prevent dirt and debris from entering the pipe, and to prevent any movement of the pipe. The bottom tiers of the stack shall be kept off the ground on timbers, rails, or other similar supports.

The pipe and fittings shall be inspected for defects before installation. All lumps, blisters and excess coal tar coating shall be removed from the bell and spigot end of each pipe, and the outside of the spigot and the inside of the bell shall be wire-brushed and wiped clean and dry, and free from oil and grease before the pipe is laid.

Every precaution shall be taken to prevent foreign material from entering the pipe while it is being offloaded, stored and installed in place. After placing a length of pipe in the trench, the spigot end shall be centered in the bell and pipe forced home and brought to correct line and grade. The pipe shall be secured in place with select backfill tamped under it. Precaution shall be taken to prevent dirt from entering the joint space. At times when pipe laying is not in progress, the open end(s) of pipe shall be closed by a watertight plug. If water is in the trench when work resumes, the seal shall remain in place until the trench is pumped completely dry. No pipe shall be laid in water or when trench conditions are unsuitable.

Cut in connections shall <u>not</u> be made on Fridays, weekends, holidays, or the day before holidays. All tapping sleeves and tapping valves shall be pressure tested prior to making connection to existing mains.

The cutting of pipe for inserting fittings or closure pieces shall be done in a neat and workmanlike manner, without damage to the pipe or cement lining, and so as to leave a smooth end at right angles to the axis of the pipe. When pipe lengths are cut, the outer edge shall be beveled to prevent damage to the gasket during jointing of pipes.

Pipe shall be laid with bell ends facing in the direction of the laying, unless directed otherwise by the Association. Wherever it is necessary to deflect pipe from a straight line, the amount of deflection allowed shall not exceed pipe manufacturer's recommendations.

For connection of mechanical joints, the socket, plain end of each pipe and gasket shall be cleaned of dirt before jointing, and shall be jointed according to manufacturer's directions. Bolts shall be tightened alternately at top, bottom and sides, so pressure on gasket is even.

For connection of push-on joints, the jointing shall be done according to manufacturer's recommendations, with special care used in cleaning gasket seat to prevent any dirt or sand from getting between the gasket and pipe. Lubricant to be used on the gasket shall be non-toxic and free from contamination. When a pipe length is cut, the outer edge of the cut shall be beveled with a file to prevent injury to the gasket during jointing.

Valves, fittings, plugs and caps shall be set and jointed to pipe in the manner per manufacturers recommendations. All dead ends on new mains shall be closed with dead end M.J. caps.

Fittings shall be "blocked" with poured-in-place concrete, with a firm minimum bearing against an undisturbed earth wall. Timber blocking will not be permitted. Thrust blocks shall be poured as soon as possible after setting the fittings in place to allow the concrete to "set" before applying the pressure test. The concrete thrust blocks shall be in place before beginning the pressure test. Anchor blocks shall be allowed to set sufficiently to develop the necessary bond strength between the reinforcing rods and the concrete anchor before beginning the pressure test.

The Developer shall notify the Association and obtain approval from the Association prior to any water shut-off or turn-on, affecting the water system, a minimum of 48 hours in advance.

WATER PIPE TESTING AND DISINFECTING

All pipelines shall be tested and disinfected prior to acceptance of work. A water hydrant meter shall be required and procured from the Association for all water utilized for flushing pipelines. All pumps, gauges, plugs, saddles, corporation stops, miscellaneous hose and piping, and measuring equipment necessary for performing the test shall be furnished, installed and operated by the Developer. Feed for the pump shall be from a barrel or other container within the actual amount of “makeup” water, so that it can be measured periodically during the test period.

The pipeline shall be backfilled sufficiently to prevent movement of the pipe under pressure. All thrust blocks shall be in place and time allowed for the concrete to cure before testing. Where permanent blocking is not required, the Developer shall furnish and install temporary blocking.

Either calcium hypochlorite granules shall be added to each section of new water main, or liquid chlorine solution, to achieve a free chlorine concentration of 50 mg/L or more. If calcium granules are used, granules shall be added to each pipe spool as it is installed. The chlorine granules shall be added in the proportions indicated in the table below (see Standard Specifications, Section 7-09.3(24)D).

Calcium Hypochlorite (65 Percent Chlorine) Addition Per 100 Feet of Pipe

Pipe Diam. (Inches)	Quantity	
	Grams	Ounces
4	0.67	0.02
6	1.52	0.05
8	2.70	0.09
10	4.22	0.15
12	6.07	0.21

All closure fittings shall be swabbed with a 5 percent chlorine solution of chlorine immediately prior to installation per AWWA Standard C651.

All of the new piping, valves and blocking shall have been installed, disinfected and tested up to the point of cutting into existing lines before the crossover is made. The crossover to the existing system shall be in full readiness, including the cut and sized specials. Forty-eight-hour notice shall be given the Association in advance of the planned “cut-ins.” All sleeves shall be ductile iron.

As soon as pipe is secured against movement under pressure, it may be filled with water. New water mains are only filled using an approved backflow prevention assembly. If chlorine granules are used the water main is filled from the lower elevation end, so that as the water main is filled the chlorine is contacted and dissolved and the chlorine is spread relatively uniformly through the length of the new water main.

The chlorinated water shall remain in contact with the new system for a minimum of 24-hours. After 24-hours, water may be added to the water main for the purposes of pressure testing. Pressure testing must also include testing against valves.

After the pipe is filled and all air expelled, it shall be pumped to a test pressure of 150 psi in excess of the working pressure, and not less than 225 psi, and this pressure shall be maintained for a period of not less than 30 minutes to insure the integrity of the thrust and anchor blocks. **The Developer is cautioned regarding pressure limitations on butterfly valves.** All tests shall be made with the hydrant auxiliary gate valves open and pressure against the hydrant valve. Hydrostatic tests shall be performed on every complete section of water main between two valves, and each valve shall withstand the same test pressure as the pipe with no pressure active in the section of pipe beyond the closed valve.

In addition to the hydrostatic pressure test, a leakage test shall be conducted on the pipeline. The leakage test shall be conducted at 150 psi for a period of not less than 15 minutes. The quantity of water lost from the main shall not exceed the number of gallons per hour determined by the formula:

$$L = \frac{SD(P)^{0.5}}{266,600}$$

in which

L = Allowable leakage, gallons/hour
N = Length of pipeline tested
D = Nominal diameter of the pipe in inches
P = Average test pressure during the leakage test, psi

The water main shall be pumped to the requisite pressure and allowing the water main to sit for 15 minutes. After 15 minutes have passed the amount of makeup water to pump the system back to the requisite is measured.

Defective materials or workmanship, discovered as a result of the tests, shall be replaced by the Developer at the Developer’s expense. Whenever it is necessary to replace defective material or correct the workmanship, the tests shall be rerun at the Developer’s expense until a satisfactory test is obtained.

If the pressure test fails and retesting of the water main is required, the Developer shall flush the water main with a water chlorine bleach solution (1 gallon of 5 percent bleach to 1,000 gallons of water). The volume of new water pumped into and through the water main shall be a minimum of three times the pipe volume.

After successful pressure testing, and additional chlorine contact if necessary, the water main shall be a minimum of thoroughly flushed to remove all super chlorinated water from the new water main. A minimum of five pipe volumes shall be a minimum of flushed out of the water main. After flushing, samples are collected for bacteriological analysis.

In all disinfection processes, the Developer shall take particular care in flushing and wasting the chlorinated water from the mains to assure that the flushed and chlorinated water does no physical or environmental damage to property, streams, storm sewers or any waterways. The Developer shall chemically or otherwise treat the chlorinated water to prevent damage to the affected environment, particularly aquatic and fish life of receiving streams.

Association employees only will be allowed to operate existing and new tie-in valves. The Developer's forces are expressly forbidden to operate any valve on any section of line, which has been accepted by the Association.

All of the new piping, valves and blocking shall have been installed, disinfected and tested up to the point of cutting into existing lines before the crossover is made. The crossover to the existing system shall be in full readiness, including the cut and sized specials. Forty-eight-hour notice shall be given the Association in advance of the planned "cut-ins." All sleeves shall be ductile iron.

BACKFLOW PREVENTION AND SPRINKLER SYSTEMS

All water systems connected to the public water system shall have backflow prevention as required by WAC 248-54-285.

All fire sprinkler systems as mandated/proposed/or required by the local fire marshal and/or Association Ordinance that have a fire department connection shall have backflow prevention as required by WAC 248-54-285.

Building sprinkler systems may be required based on Building Codes/Fire Marshall requirements.

CONNECTION TO SYSTEM

Physical connection of the Extension to the Association's water system shall not be made until:

a. Satisfactory water quality and pressure tests of the Extension have been made.

b. The Developer has applied in writing to the Association for permission to make the connection not less than 96 hours prior to the time requested.

c. All work to date conforms to the terms of this Agreement.

d. The Developer has received written approval from the Association.

e. The connection must be made in the presence of the Association. Notwithstanding the foregoing, Association may shut the valve at the connection point of the Extension and withhold the flow of water to the property until final acceptance of the Extension is granted by Association.

f. No connection shall be made on Fridays.

WATER QUALITY

It shall be the Developer's responsibility to maintain acceptable water quality standards within the Extension throughout the term of the Agreement. This may be done in one of two ways:

a. An adequate number of connections to the Extension are in service to ensure water system turnover; or

b. A mutually agreed upon flushing program is in place to ensure water system turnover in which case the following shall apply:

    (1) All flushing water must be metered.

    (2) All flushed water must be disposed of using accepted best management practices.

    (3) Flushing shall be done by Developer's staff with prior notification to the Association.

SERVICE CONNECTIONS

Water meter services and meter boxes shall be within road right-of-way or easements. A water meters and water meter boxes shall be set to final grade and all adjustments shall be made prior to final pressure testing of the system. Service inlet shall be centered at inlet end of box and faced toward outlet end of box parallel with long sides.

All meters shall be installed by the Association, and the Developer shall pay the current meter installation charge.

All new buildings and residences with a static water pressure of greater than 80 psi, shall include in their water service a suitable pressure reducing valve to protect the plumbing from excessive pressures. The service PRV shall be located downstream of the meter and shall be privately owned.

Individual services to each property shall be installed and connected to the new water mains. New services from existing mains will be installed by the Association. The

Developer shall be responsible for permitting, traffic control, excavation to expose main, shoring to protect Association employees, backfilling trench, and completion of all restoration.

Upon completion of the installation of the water main (before testing and disinfection) services shall be installed by connecting to the water main and extending the service line to the property line as shown on the Standard Details or approved equal. Larger service lines shall be of the type and style as designated in the approved Plans.

All single family residential shall be provided with a meter setter including a check valve. All services other than single family residential shall be provided with Washington State-approved backflow prevention located immediately behind and on the property side of the water service box. Irrigation, residential single-family fire meters, duplex, and multi-family residential connections shall require double check valve assemblies (DCVA). All other connections shall require reduced pressure backflow assemblies (RPBA). Commercial fire sprinkler system, if unmetered shall require reduced pressure detector assemblies (RPDA).

All irrigation using chemical feed, or water features, including decorative ponds, pools and fountains requiring make-up water shall be protected from backflow into the public water supply by a **minimum** of an approved air-gap to be located at the fill point of the pond or water feature. This “air-gap” shall be inspected by the Association prior to filling. In all instances, the water supply used for filling purposes shall be protected by a double check valve assembly (DCVA) installed behind the meter for new construction or retrofitted as close as practical on modified systems.

Service lines between the main and the property line shall be placed at a trench depth sufficient to maintain a 3'-0" cover over the top of the service line for its full length, taking into consideration the final finished grade of the proposed street and the final finished grade of any storm ditches.

Upon completion of each service line as indicated herein, the Developer shall flush the service line to remove the debris that may interfere with the future meter installation, and further verify that the service line has full pressure and flow to the meter box.

RECORD DRAWINGS

The Developer who installs systems which will be deeded to the Association, shall submit record drawings to the Association within 14 calendar days after completion of the work. Record drawings shall on 22" x 34" bond paper and shall be stamped, signed and dated by an engineer currently licensed in the State of Washington. A Washington State Department of Health Construction Completion Report shall be completed by an engineer currently licensed in the State of Washington. Drawings shall show locations of all facilities and appurtenances to within 0.5 feet of actual location.

In the event that the Developer or his/her representatives does not have qualified personnel to furnish the record drawings required by this section, he shall advise the Association in order that necessary field measurement may be taken during construction for the preparation of record drawings. All costs of such field inspection and measurement, to include the preparation of the record drawings, shall be at the sole expense of the Developer.

ACCEPTANCE OF IMPROVEMENTS

The Association shall not accept developer constructed improvements incrementally. All aspects of the water system improvements must be complete, clean, inspected, and as-built drawings submitted in AutoCAD, PDF and hard copy form, prior to Association acceptance of improvements, release of performance sureties and operation of the new system. Prior to acceptance, all improvements shall be in good working order and shall have passed all testing requirements. All dedications, easements, or other legal documentation shall be complete and recorded prior to final acceptance of the project improvements.

FINISHING AND CLEANUP

Before acceptance of the water system construction all other work on the project that may impact the water system, such as backfilling, paving and utility trenching must be completed.

Where all or portions of the utility is in undeveloped areas, the entire area which has been disturbed by the construction shall be shaped so that upon completion the area will present a uniform appearance, blending into the contour of the adjacent properties. All other requirements outlined previously shall be met.

Castings for valves, vaults and other water installations, which have been covered with the asphalt material, shall be cleaned to the satisfaction of the Association.

MATERIALS

SUBMITTALS

The Developer shall obtain approval of materials to be used from the Association prior to commencement of construction work. The Developer shall submit cut sheets and other information as appropriate for the proposed materials, for approval by the Association prior to installation.

WATER MAINS AND FITTINGS:

All materials shall be new and undamaged. Water mains to be installed unless otherwise approved (or required) in writing by the Association Engineer shall be ductile iron pipe for all sizes.

All pipe shall be delivered to the site with pipe plugs securely in place in the pipe. The plugs shall remain in place until the pipe is in the trench and is ready to be installed. Only the plugs at the end of the pipes being jointed shall be removed. The plug at the far end of the pipe shall remain in place until the next joint is made.

The ductile iron pipe shall conform to ANSI/AWWA C151/A21.51-91 Standards, and current amendments thereto, except the ductile iron pipe shall be thickness Class 52 for 4-inch through 14-inch-diameter pipe (except for 6-inch hydrant spools which shall be Cl. 53) and Class 50 for 16 inch and larger. Grade of iron shall be a minimum of 60-42-10. The pipe shall be cement lined to a minimum thickness of 1/16 inch, and the exterior shall be coated with an asphaltic coating. Each length shall be plainly marked with the manufacturer's identification, year case, thickness, class of pipe and weight.

Type of joint shall be mechanical joint or push-on type, employing a single gasket, such as "Tyton," except where otherwise calling for flanged ends. Bolts furnished for mechanical joint pipe and fittings shall be high strength ductile iron, with a minimum tensile strength of 50,000 psi.

Restrained joint pipe, where shown on the Plans shall be push-on joint pipe with "Fast Tight" gaskets as furnished by U.S. Pipe or equal for 12-inch diameter and smaller pipe and "TR FLEX" as furnished by U.S. Pipe or equal for 16-inch and 24-inch diameter pipes. The restrained joint pipe shall meet all other requirements of the non-restrained pipe.

All pipe shall be jointed by the manufacturer's standard coupling, be all of one manufacturer, be carefully installed in complete compliance with the manufacturer's recommendations.

Joints shall be "made up" in accordance with the manufacturer's recommendations. Standard joint materials, including rubber ring gaskets, shall be furnished with the pipe. Material shall be suitable for the specified pipe size and pressures.

All fittings shall be short-bodied, ductile iron complying with applicable ANSI/AWWA C110 or C153 Standards for 350 psi pressure rating for mechanical joint fittings and 250 psi pressure rating for flanged fittings. All fittings shall be cement lined and either mechanical joint or flanged, as indicated on the Plans.

Fittings in areas shown on the Plans for restrained joints shall be mechanical joint fittings with a mechanical joint restraint device. The mechanical joint restraint device shall have a working pressure of at least 250 psi with a minimum safety factor of 2:1 and shall be EBAA Iron, Inc., MEGALUG, Star Pipe Products, or approved equal.

All couplings shall be ductile iron mechanical joint sleeves.

VALVES

All valves 14 inch and larger shall generally be furnished and installed as butterfly valves. All valves 12 inch and smaller shall generally be furnished and installed as resilient seat gate valves.

The valves shall be set with stems vertical. The axis of the valve box shall be common with the axis projected off the valve stem. The tops of the adjustable valve boxes shall be set to the existing or established grade, whichever is applicable.

All valves with operating nuts located more than 4'-0" below finished grade shall be equipped with extension stems to bring the operating nut to within 18 inches of the finished grade.

At the top of the extension stem, there shall be a 2-inch standard operating nut, complete with a centering flange that closely fits the 5-inch pipe encasement of the extension stem. The valve box shall be set in a telescoping fashion around the 5-inch pipe cut to the correct length to allow future adjustment up or down.

Each valve shall be provided with an adjustable two-piece cast iron valve box of 5-inches minimum inside diameter. Valve boxes shall have a top section with an 18-inch minimum length. The valve boxes and covers shall be Olympic Foundry No. 940 or equal.

Valves located in easements or outside of paved areas shall have concrete collars with a minimum size of 2'-0" diameter by 4-inches thick.

Resilient-Seated Gate Valves

The gate valves shall be ductile iron body valves, iron disk completely encapsulated with polyurethane rubber and bronze, non-rising stem with “O” ring seals conforming to AWWA C509 or C515. The valves shall open counter-clockwise and be furnished with 2-inch square operating nuts except valves in vaults shall be furnished with handwheels. All surfaces, interior and exterior shall be fusion bonded epoxy coated, acceptable for potable water.

For applications with working pressure above 175 psi, a valve rated as 250 psi or higher shall be used.

Valves shall be Mueller A-2360 Series, M&H 515 Series, or approved equal.

Butterfly Valves

Butterfly valves shall be ductile iron body of the tight closing rubber seat type with rubber seat either bonded to the body or mechanically retained in the body with no fasteners or retaining hardware in the flowstream. The valves shall meet the full requirements of AWWA C504, Class 150B except the valves shall be able to withstand 200 psi differential pressure without leakage. The valves may have rubber seats mechanically affixed to the valve vane. Where threaded fasteners are used, the fasteners shall be retained with a locking wire or equivalent provision to prevent loosening. Rubber seats attached to the valve vane shall be equipped with stainless steel seat ring integral with the body, and the body internal surfaces shall be epoxy coated to prevent tuberculations buildup, which might damage the disc-mounted rubber seat.

No metal-to-metal sealing surfaces shall be permitted. The valves shall be bubble-tight at rated pressures with flow in either direction, and shall be satisfactory for applications involving valve

operations after long periods of inactivity. Valve discs shall rotate 90 degrees from the full open position to the tight shut position.

Butterfly valves shall be Henry Pratt Company "*Groundhog,*" M&H, or Mueller "*Lineseal III.*"

Tapping Sleeves and Tapping Valves

The tapping sleeves shall be rated for a working pressure of 250 psi minimum and furnished complete with joint accessories. Tapping sleeves shall be constructed in two sections for ease of installation and shall be assembled around the main without interrupting service.

Mechanical joint style sleeves shall be ductile iron and comply with AWWA C110. Ductile iron mechanical joint style sleeves are required for all size-on-size connections. Mechanical joint sleeves shall be cast by Clow, Dresser, Mueller, Tyler, U.S. Pipe or approved equal.

Fabricated steel style sleeves shall be fusion bonded epoxy-coated, acceptable for potable water. Fabricated steel style sleeves will not be allowed for size-on-size connections.

Tapping valves shall be provided with a standard mechanical joint outlet for use with ductile iron pipe and shall have oversized seat rings to permit entry of the tapping machine cutters. In all other respects, the tapping valves shall conform to the resilient seat gate valves herein specified with regards to operation and materials.

The tapping sleeve and valve shall be tested to 100 psi (air) prior to tapping the main.

The installation contractor for the tapping sleeves and valves shall be approved by the Association.

Valves shall be offloaded and stored in a manner similar to pipe to prevent damage and to prevent dirt and debris from entering the valve.

VALVE MARKERS

Water valve marker posts shall be concrete for each valve outside of asphalt.

Markers shall be placed at the edge of the right-of-way opposite the valve and set so as to leave 2'-0" of the post exposed above grade. The distance in feet and inches to the valve shall be clearly stenciled on the side facing the valve in black numerals 2 inches in height.

PRESSURE REDUCING AND RELIEF VALVES

When water main pressure exceeds 100 psi, an approved pressure reducing valve with an approved pressure relief device shall be installed to reduce the pressure to 60 psi or lower. Pressure reducing valve stations shall generally consist of a large and a small valve for high flow and low flow periods. Pressure reducing valve stations shall be approved by the Association on a case by case basis.

If the static pressure in the water main at the service line connection exceeds 80 psi a service PRV shall be installed on the property side of the water meter.

FIRE HYDRANTS

All fire hydrants shall be approved by the National Board of Fire Underwriters and conform to AWWA Specification C502, break-away type, in which the valve will remain closed if the barrel is broken. The hydrant barrel shall have a diameter of not less than 8-1/2 inches, and the valve diameter shall be not less than 5-1/4 inches. Each hydrant shall be equipped with two 2-1/2-inch hose ports (National Standard Thread), and one 4-1/2-inch pumper connection (National Standard Thread), with permanent 5-inch Storz hydrant adaptor and Storz blind cap installed on each pumper port. Each hydrant shall be equipped with a suitable positive acting drain valve and 1-1/4-inch pentagonal operating nut (counter-clockwise opening). A blue pavement marker shall be furnished and installed in the pavement in front of each hydrant.

The holding spools between the gate valve and fire hydrant shall be made from 6-inch Class 53 ductile iron pipe, 0.34-inch wall thickness. The hydrant and gate valve shall be anchored in place using holding spools and mechanical joint restraint device. Holding spools with length in excess of 17 feet shall be supplied with an M. J. sleeve and mechanical joint restraint device.

The fire hydrants shall be painted per the Standard Details.

Between the time that the fire hydrant is installed and the completed facility is placed in operation, the fire hydrant shall at all times be wrapped in burlap, or covered in some other suitable manner to clearly indicate that the fire hydrant is not in service.

BLOWOFFS AND AIR RELIEF ASSEMBLIES

Two-inch or 4-inch blowoff assemblies shall be installed at the terminus of all dead-end water mains. Blowoffs utilized by the Developer for flushing the water main shall be sufficient size to obtain 3 feet per second velocity in the main. Temporary blowoffs shall be removed and replaced with a suitably sized watertight brass plug.

Two-inch air and vacuum release valves shall be installed at principal high points in the system.

The installation of these items shall include connection piping, gate valve, valve box, and all accessories. Valve markers shall be optional with Association.

ATTACHMENT A

MISCELLANEOUS FORMS

ATTACHMENT A

SALLAL WATER ASSOCIATION

DEVELOPER EXTENSION AGREEMENT

December 2017

DECEMBER 2016

ATTACHMENT A

APPLICATION AND AGREEMENT TO CONSTRUCT WATER SYSTEM EXTENSION

1. INTRODUCTION

The undersigned ("Owner") hereby makes application to Sallal Water Association ("Association") of King County, Washington, for permission to construct and install a water system extension and appurtenances ("Extension") and to connect the same to Association's water distribution system in accordance with Association's standards, specifications and construction conditions as set forth herein (collectively the "Work").

Upon acceptance by motion of the Board of Trustees of Association and due execution hereof on behalf of the Association, this Application and Agreement shall become a binding contract between the parties hereto.

2. LOCATION OF EXTENSION

The Extension shall be designed to serve the property described herein. A general description of the property including the proposed routing of any offsite portion of the Extension shall be set forth in Exhibit A. A legal description of the property shall be set forth in Exhibit B. These exhibits are attached hereto and incorporated by reference. Owner shall obtain all necessary easements in the name of the Association utilizing Association's easement forms.

3. FEES, COSTS AND DEPOSITS

a. Owner shall pay to Association an administrative fee of $500 to make this application. Once this application is approved by Association, Owner shall pay all of Association's costs incurred in administering this Agreement including but not limited to legal, engineering, and inspection costs (including extra costs for any overtime inspection). Association may bill these costs from time to time to Owner, or Association may require Owner to maintain a deposit balance with Association as set forth below.

b. The Association shall maintain an accounting of all costs and fees charged to the Extension project and all payments and deposits paid by Owner. Association may comingle deposited funds with any other funds of the Association but may for internal accounting purposes treat the deposited funds, less charges, as an account ("Deposit Account") for the project. The Association may charge the Deposit Account (and Owner) with all costs related to the Extension including final acceptance and warranty period costs, repair and inspections. In the event that the Deposit Account balance becomes less than $0 all work by Sallal on the project shall cease until the account balance is brought back to a minimum of $500. If the project is under construction, Sallal may issue a STOP WORK order until the balance of the Deposit Account is increased to an amount determined sufficient by the Association to pay for inspection costs but not less than $500.

Owner shall pay each such invoice in full no later than twenty (20) calendar days from the invoice date. If Owner fails to do so, Association may terminate all services with respect to the Extension until the amount is paid in full and pursue any other remedy authorized by law to collect the amount due. During the period of cessation of Association services, Owner's work on the Extension shall cease except for surface restoration and repair activities and maintaining workplace and public safety No interest shall accrue on positive Deposit Account balances. Owner may review the Deposit Account on reasonable notice during regular business hours at the Association's main office.

4. DESIGN OF EXTENSION

The Owner shall cause its engineer to design the Extension. All design shall be in accordance with Association's Water System Design and Construction Standards, December, 2017, ("Standards"), unless changes to the Standards are approved by Sallal. The Standards are incorporated herein by this reference as if set forth in full herein. The Association's engineer shall review and comment on the design and may require changes to comply with the terms of this Agreement. The Association may charge a plan review fee which shall include the fees charged by the Association's engineer. All plans shall be prepared in accordance with the Standards to include such modifications as may be required by the Association. The design and construction plans and specifications may also be subject to the approval of the State of Washington Department of Health, the King County Fire Marshal, King County (pursuant to King County Road Standards, King County Surface Water Design Manual, King County Clearing & Grading, and other provisions of the King County Code), the City of North Bend (if applicable) and other agencies. Once approved by the Association, the plans and specifications (collectively or individually "Plans and Specifications") for the Extension shall be deemed incorporated into to this Agreement and shall become an integral part hereof.

5. ADMINISTRATIVE REQUIREMENTS

a. The following requirements shall be fulfilled prior to commencement of construction of the Extension.

b. All deposits and charges due from Owner shall be paid in full.

c. Owner shall procure all insurance as required herein and provide evidence thereof to Association including an insurance certificate with endorsements attached showing additional insured as required by such section.

d. Owner shall pay for all permits. Permits for work in King County right-of-way shall be the Association. Permits for work in North Bend shall be obtained by the Developer.

All permits required by King County and/or North Bend shall be procured and be in effect and copies provided at the preconstruction conference.

e. If not already in existence, all easements on land owned by third parties upon which the Extension is located shall be procured by the Owner utilizing a form approved by the Association Attorney and Engineer as to form and content. The easements shall be obtained at the cost of the Owner and shall name the Association as grantee and shall be duly executed, delivered to the Association and recorded with King County prior to the commencement of the Work. The Association may require title insurance or a title search on any easement.

f. If Owner seeks final plat or subdivision approval of its development prior to completion of all infrastructure improvements, governmental agencies may require utility providers to assure water service to the development. Governmental authorities and grantors of easements may also require roadway and surface restoration after an area is disturbed. If Association is, becomes, or it reasonably believes it is or will become obligated to provide restoration, water service or other utility functions in advance of final acceptance of the Extension in accordance with this Agreement, Association may require Owner to furnish a Performance and Payment Bond upon forms approved by Association issued by duly licensed insurance or bonding company for the amount of the construction and restoration costs determined by the Association, naming the Association as Obligee. The Performance and Payment Bond shall obligate the Owner to unconditionally complete the Work and to pay all costs of labor performed, and materials and equipment furnished to complete the Work. Association's determination that a Performance and Payment Bond is required and the amounts thereof shall be final and binding on Owner. The Performance Bond shall be in an amount equal to 150% of the estimated costs to complete the Work The Owner shall submit an engineer's cost estimate for the proposed work in the right-of-way. The amount of the Performance shall be approved by the Association's Engineer. Owner may provide Association with a cash deposit held in a bank savings account or certificate of deposit pursuant to a duly executed assignment of funds form in lieu of the performance bond.

g. The Owner shall file a materials and equipment list with the Association prior to proceeding with construction. This list shall include the quantity, manufacturer, and model number (if applicable) of materials and equipment to be installed under the Contract. This list will be checked with reasonable promptness by the Association regarding conformity with the Plans and Specifications. The Association's engineer shall be sole judge in the question of "or equal" of any materials and equipment proposed by the Owner. The Owner shall pay to the Association the cost of tests and evaluations by the Association to determine acceptability of any alternate proposed by the Owner, in accordance with the established rates of its engineer for time and expense work, the total cost of which may be charged by the Association as additional fees hereunder.

h. At the request of the Association, the Owner's material suppliers may be required to furnish a certification, from a recognized testing laboratory, to certify that the material supplied, and for which the certification was requested, is in full compliance with the Association's specifications.

6. CONSTRUCTION REQUIREMENTS

a. The Association shall be notified at least 1 week in advance of the start of construction. Following notification, Owner may proceed on the start date identified by Owner in the notification to install the Extension in accordance with the terms of this Agreement. All construction shall be performed by Owner at its sole expense using Owner's personnel, agents and contractors. Completion of the Extension in accordance with the terms of this Agreement is a condition precedent to Association accepting the Extension and providing water service to the Property. If Owner fails to complete the installation by the expiration date of this Agreement, the Agreement shall be null and void and have no further force or effect except that Owner shall restore, to its prior condition or better, any areas disturbed or altered by the construction contemplated by this agreement. This Agreement may be extended if agreed to in writing by both parties. In the case of public right of way, restoration shall be performed in accordance with the requirements of the general purpose government having jurisdiction over the right of way. The Association may, upon request, extend the expiration date of this Agreement for good cause.

b. All Work shall be done in strict conformity to the Plans and Specifications, the Standards and to lines and grades shown on the approved Plans. If field changes are needed, approval from both the Owner's engineer and the Association's engineer are required.

c. If final road grades differ from the approved Plans, the Owner shall grade all roads to the design grade elevation approved by governmental agencies having jurisdiction and shall advise the Association in writing during construction of any changes which may be contemplated or required. If the Owner changes the grade elevation of the road Owner agrees to raise or lower the water line and service connections as required by the new grade elevation at no cost to the Association. This obligation shall remain in full force and effect until the end of the warranty period for the roadway work or water utility work, whichever is longer.

d. Temporary connections to the Association's water system shall not be allowed, except through approved backflow prevention systems, and only for the purposes of filling the new water main(s).

e. The connection of the Extension to the Association's water system shall not be made except with the approval of and under the supervision of the Association.

7. AUTHORITY OF THE ASSOCIATION'S ENGINEER AND INSPECTOR

The Association's engineer or person or firm designated by the Association shall represent the Association in an advisory and consulting capacity in engineering matters relating to this Agreement. The Association's engineer or designee shall have the following authority:

a. Determine the quality, acceptability, and fitness of the Work.

b. Decide all questions relative to the true construction, meaning, and intent of this Agreement and the Plans and Specifications.

c. Decide all questions relative to the classification of materials, and the fulfillment of this Contract.

d. Have the power to reject or disapprove nonconforming Work.

e. Have authority to stop the Work whenever, in its opinion, such stoppage may be necessary to ensure the proper execution of this Agreement.

f. Decide the sequence of Work where such decision is for the purpose of avoiding conflict with other work being performed by the Association or by others in the same general locality.

The decision of the Association's engineer or designee in the matters described above shall be final. However, they shall not have the authority to waive any term, condition, or provision of this Agreement or the obligation of the Owner to fully perform this Agreement.

Nothing contained herein or elsewhere shall be construed as requiring or authorizing the Association's engineer or designee to direct the method or manner of performing any work by the Owner under this Agreement.

8. CONTRACTOR AND SUBCONTRACTORS

The Owner shall be fully responsible for all Work, and all acts and omissions, of its contractor and subcontractors and persons either directly or indirectly employed by them.

9. WORKMANSHIP AND MATERIALS

The Owner shall at all times supervise the work and shall not employ on the Work any unfit person nor anyone not skilled in the work assigned to him or her. The Owner shall use only competent contractors to perform the Work. The Owner shall provide and pay for all materials, labor, water, tools, equipment, light, power, transportation, and all other facilities necessary for the execution and completion of the Work. All workmanship, equipment, materials, and articles incorporated in the Work shall be new, shall be the best available grade, and shall be of a quality equal to, or better than that specified.

10. MATERIALS AND EQUIPMENT FURNISHED BY ASSOCIATION

Owner shall receive, inspect, store, and accept all Association furnished items of material and equipment if applicable, subject only to latent defects. Claim shall be made in writing within 5 days after discovery of any latent defect. Damages or loss shall be limited to the cost of and labor for replacement of any such damaged item. In any event, the liability of Association for furnishing an item having a latent defect is limited to damage or loss resulting from use thereof, only to the extent that such loss or damage is recoverable by the Association against the supplier. Association shall include in its claim to the supplier the amount of damage claimed to the Owner or Owner's contractor or Association may assign to Owner any claim which Association would otherwise have against any such suppliers, and the sole remedy of Owner shall be by suit or action on such assigned claim. Association agrees to cooperate with Owner in furnishing facts or data to assist Owner in prosecuting any action on an assigned claim.

11. STORAGE OF MATERIALS AND EQUIPMENT

Materials and equipment shall be safely stored by the Owner to ensure the preservation of their quality and fitness for the Work. Stored equipment and materials shall be placed so as to facilitate inspection. The Owner shall be responsible for all loss or damage that may occur to all materials and equipment until final acceptance of the Work by the Association.

12. ACCESS

The Association at all times shall have access to the Work and to the locations where the Work is in preparation. The Owner at all times shall maintain proper facilities for such access. Where applicable, the Owner shall also provide proper facilities for access to all Work sites for inspections by representatives of Federal, State, and local regulatory agencies.

13. INSPECTION AND TESTS

Inspection and test of Work and materials shall be in accordance with Association and other regulatory requirements and standards, and shall be strictly for the benefit of the Association. No approvals, comments or suggestions issued by the Association shall be construed to relieve the Owner of any obligations under the Contract. All construction shall be subject to full time inspection at the sole discretion of the Association and other regulatory agencies at the sole cost of Owner.

The following scheduled inspections and tests shall be conducted by the Association's engineer or designee:

a. Start of construction inspection.

b. Scheduled inspections during the course of the work.

c. Test inspections. (Note: The Association's representative shall collect bacteriological samples after the extension has passed all pressure tests.)

d. Final inspection.

e. End of Warranty Period inspection (to be conducted at least two weeks prior to expiration of Warranty Period).

Other scheduled inspections and tests may be required to comply with Association standards, laws, or ordinances. Some inspections and tests may be conducted by a person or firm designated by the Association who has special expertise in the kind of work to be inspected.

The Owner's engineer shall conduct inspections sufficient such that the Owner's engineer can complete the Washington Department of Health Construction Completion report.

The Owner shall give the Association timely notice when the state of the Work is such that a scheduled inspection and test can be conducted. When the inspection and test is to be conducted by authorities other than the Inspector or Engineer, the Owner shall coordinate all inspection arrangements through the Inspector or Engineer.

The Owner shall furnish such samples, testing, and labor as may be required for the Association to make a thorough inspection and examination of materials to be used in the Work. The neglect or failure on the part of the Association to condemn or reject inferior material or work shall not be construed to be acceptance of the materials or the Work.

The Association shall have the right to reject materials and workmanship which are defective, or to require their correction. Rejected workmanship shall be promptly corrected, and rejected materials shall be removed from the premises.

Should it be necessary for the Association, prior to final acceptance of the Work, to make an inspection or reinspection of Work already completed by removing or tearing out any portion thereof, the Owner shall on request, promptly furnish all necessary facilities, labor and materials to do so.

The Owner is responsible for all costs of inspection and testing for Association to determine that the installation of the Extension is performed in accordance with all Association standards and requirements.

14. CONNECTION TO SYSTEM

Physical connection of the Extension to the Association's water system shall not be made until:

a. Satisfactory water quality and pressure tests of the Extension have been made.

b. The Owner has applied in writing to the Association for permission to make the connection not less than 96 hours prior to the time requested.

c. All work to date conforms to the terms of this Agreement.

d. The Owner has received written approval from the Association.

e. The connection must be made in the presence of the Association. Notwithstanding the foregoing, Association may shut the valve at the connection point of the Extension and withhold the flow of water to the property until final acceptance of the Extension is granted by Association.

f. No connection shall be made on Fridays.

15. WATER QUALITY

It shall be the Owner's responsibility to maintain acceptable water quality standards within the Extension throughout the term of the Agreement. In connection with this obligation, the Association may require:

a. An adequate number of connections to the Extension are in service to ensure water system turnover; or

b. A mutually agreed upon flushing program is in place to ensure water system turnover in which case the following shall apply:

    (1) All flushing water must be metered.

    (2) All flushed water must be disposed of using accepted best management practices.

    (3) Flushing may be done by Owner's staff with Association Inspector on site or by Association staff at Owner expense.

16. COMPLIANCE WITH LAWS AND OTHER REQUIREMENTS

a. The Owner shall fully comply with all Federal, State, and local laws, regulations, and ordinances governing, controlling, or limiting in any way the Work or the persons engaged in the Work.

b. Owner shall comply with all pertinent requirements of Federal, State, and local environmental laws and regulations including, but not limited to, the Federal Clean Air Act, Federal Clean Water Act, State and local noise ordinances, construction site erosion control regulations, Sensitive Areas Ordinances, trench excavation safety systems and if applicable, shoreline construction requirements.

c. Owner shall at all times during the term hereof perform the requirements of and comply with the terms and provisions of the following:

    (1) Association's written rules, regulations and policies;

(2) Any utility or access easements that presently encumber Owner's real property described herein and any adjacent parcels owned directly or indirectly by Owner;

(3) Any contracts, other than this agreement, between Association and Owner or its affiliates;

(4) The requirements of any City or State issued franchise agreement.

17. PUBLIC SAFETY AND CONVENIENCE

The Owner shall conduct the Work with proper consideration for public safety and convenience. This requirement shall include, but is not limited to, the maintenance of traffic, access to fire hydrants, use of sidewalks and public and private driveways, and the proper functioning of existing private and public facilities such as gutters, drains, ditches, natural water courses and the like.

Where construction consists of replacement of, or modification to, existing facilities such as existing sewer or water lines, pumping facility or treatment works, the Owner shall provide for the normal maintenance and operation of such facilities during construction.

The Owner shall obtain prior approval from the Association, the affected owners and the proper governmental authority to obstruct traffic or to disturb any existing private or public facility.

18. PROTECTION OF PUBLIC AND PRIVATE PROPERTY

The Owner shall adequately protect public and private property adjoining or affected by the Work including lawns, trees, shrubs, sidewalks, curbs, pavements, utilities, vehicles and structures. Owner shall repair and restore all property damaged by the Owner's operations, at the sole expense of the Owner. The damaged property or improvements shall be replaced to a condition equal to or better than that existing prior to the damage. Notwithstanding any other provision thereof, Owner's obligations under this section shall survive the termination of this Agreement and shall apply in such event whether or not Owner has completed the Work.

19. PROTECTION OF WORK

The Owner shall be responsible for the care and protection of the Work including all materials delivered, all Work performed, and all loss or damage thereto, until final acceptance by the Association, provided, however, this section shall in no way limit Owner's warranty obligations hereunder that commence upon final acceptance of this Agreement. Work damaged during construction shall be repaired or replaced at the expense of the Owner to the satisfaction of the Association.

20. SAFETY AND HEALTH STANDARDS AND ACCIDENT PREVENTION

The Owner shall comply with the safety standards of applicable building and construction laws and codes including the “Manual of Accident Prevention in Construction” published by the Associated General Contractors of America; United States Department of Labor; “Safety and Health Regulations for Construction” published by the Occupational Safety and Health Administration; as well as the Washington State Department of Labor and Industries General Safety and Health Standards, Safety Standards for Construction Work, Trench Excavation Safety Systems (WAC 296) and “The Manual on Uniform Traffic Control Devices.” The Owner shall be solely and completely responsible for working conditions on or near the job site, including safety of all persons and property during the performance of work. These requirements shall apply continuously and shall not be limited to normal working hours.

The duty of the Association to review the Owner’s construction performance does not include review of the adequacy of the Owner’s safety measures. Owner shall take full responsibility for safety of all Work.

21. USE OF FACILITIES

The Extension may not be put into service prior to final acceptance of this Agreement without the prior written consent of Association.

22. CORRECTION OF DEFECTIVE WORK

The Owner shall promptly remove from the construction site all Work or materials listed by the Association as failing to conform to this Agreement, whether incorporated in the Work or not, including, but not limited to Work and facilities that have been mislocated due to inaccurate or incorrect surveys, survey controls, staking or installation. The Owner shall promptly replace and re execute all defective work in accordance with this Agreement and without expense to the Association and shall bear the expense of making good all work of others destroyed or damaged by such removal or replacement. Failure or omission on the part of the Association to condemn unsuitable, inferior, or defective work and/or labor or material or equipment shall not release the Owner or its performance bond (if applicable) from performing the Work in accordance with this Agreement.

In the event the Owner does not accomplish corrections or repairs, after reasonable notice at or within the time specified, the Work may be otherwise accomplished by Association and the cost thereof shall be borne by the Owner.

If, as a result of the failure of the Owner to make corrections and repairs or in the event of an emergency and time does not permit the Association to give notice to the Owner before making corrections and repairs (such as where damage may result from delay in making of corrections and repairs or where loss of service to customers will result), temporary needed corrections and/or repairs may be made by the Association and the cost thereof shall be borne by the Owner.

When corrections and repairs of defects are made, the Owner shall warrant such corrections and repairs for 1 year after acceptance of the corrections and repairs by the Association, provided, that, the expiration of this repair warranty shall not be earlier than the 2-year warranty made on the Extension.

The Owner shall be responsible for any loss, damage, costs, and expenses incurred by the Association resulting from defects in the Work including actual damages, costs of materials and labor expended by the Association in making emergency corrections and/or repairs, costs of engineering, inspection, legal services, and Association's administrative overhead costs.

23. ACCEPTANCE OF EXTENSION

Final acceptance of the Extension ("final acceptance") and the eligibility of water service to Owner's project shall be subject to completion of the following by Owner:

a. All work on the Extension has been completed in accordance with the terms and conditions of this Agreement.

b. The Association has made final inspection and has approved the Extension as having been completed in accordance with the Plans and Specifications.

c. All fees, charges and costs due hereunder have been fully paid, including a final acceptance deposit.

d. All compaction reports have been filed and are complete.

e. All pressure test(s) are satisfactory and complete.

f. Water quality testing has been completed with results satisfactory to the Association.

g. All easements and bill of sale have been approved by Association and have been duly executed and delivered to Association.

h. The Owner's engineer has completed a Washington Dept. of Health Construction Completion Report and submitted to the Association.

i. As-built locations and all appurtenances ("as-builts") have been delivered to Association via hard copy plans at the same scale and on the size Plan Sheets as the original drawings.

j. Electronic design drawings delivered to the Association in both AutoCAD and PDF format.

k. Association locations of water system features, such as valves, hydrants, meter boxes, etc. have been verified by survey (at the discretion of the Association) and an electronic point plot has been provided to the Association.

l. Association has been furnished with a Maintenance or Warranty Bond which shall continue in force for 2 years after title to the Extension has been received and accepted by the Association or 1 year after the final lift of asphalt is placed over the Extension or any part, whichever is longer. The bond shall be in a form approved by Association in an amount equal to 15 percent of the total construction costs incurred, and shall require the Owner and the bonding company to correct defects in workmanship and materials, including the final lift of asphalt and also to repair damage to the Extension caused by Owner or third parties, such as contractors or builders; provided, however, the first $10,000 of such bond shall be in the form of an assigned savings account.

m. A report of the status of the project pertaining to the status of all permits issued in relation to the work has been provided to and found acceptable by the Association.

n. Written acceptance of restoration of public right of way and private property, if applicable, has been received.

o. Owner is not in breach or violation of terms and conditions of any other contracts between Association and Owner, easements that benefit Association, and Association's rules and regulations.

Final acceptance of the Extension shall not occur until the Board of Trustees of the Association adopts a motion at a proper Board meeting expressly authorizing final acceptance of the Extension.

The warranty period set forth in Section 32 below shall commence upon final acceptance. Near the end of the warranty period the Association may reinspect the entire Extension. Following reinspection by the Association a written notification shall be sent to Owner that includes identification of corrections, Owner shall immediately make corrections, including, but not limited to repairing any damage to the Extension and any damage to other parts of the Association's facilities caused by the Owner, its agents and contractors and any third parties entering the property, except that this provision shall not apply to any damage caused by an intentional or negligent act of the Association. Upon request, the Association shall provide written verification that the corrective construction is complete. Any remaining deposit funds will be refunded and any shortages billed to and shall be paid by Owner after the corrective work is accepted by the Association.

24. FINAL ACCEPTANCE WHEN FINAL LIFT OF ASPHALT DEFERRED

In the event that Owner has completed all of the obligations under this Owner Extension Agreement except for the installation of the final lift of asphalt and making adjustments to the elevations of hydrants, valves, and other appurtenances to final grade, and Owner desires the property to be eligible for water service, then the Association may grant final acceptance subject to the terms and conditions listed below that are in addition to the terms and conditions listed in the subsection above.

a. A written request is issued by the Owner to the Association for Final Acceptance prior to installation of final lift of asphalt.

b. ATB/first lift of asphalt is installed.

c. Association has received written notice from the governmental agency with jurisdiction over the project that it has received adequate assurance that all roads for which a Right-of-Way Permit has been issued will be completed in accordance with all applicable (city, county, and state) requirements which may include interim and final roadway striping and reflectors.

   Alternatively, Association may require a performance bond for 150% of the foregoing amounts.

d. Within 30 days from the installation of the final lift of asphalt to the standards of the governmental body having jurisdiction over such work and adjustment of the elevation of all appurtenances to final asphalt grades as required by Association, Owner will notify Association and request inspection of the work. Upon acceptance of work the remaining unused amount of the cash deposit, if any, shall be refunded to the Owner if Owner is otherwise in compliance with the terms and conditions of this Agreement.

e. If Owner does not complete the work satisfactorily within such 30-day period to Association's satisfaction, the work may be completed or corrections made by Association staff. Association labor and equipment costs based on Association's standard rates will be deducted from the deposit and the remaining balance, if any, shall be refunded to the Owner. If the deposit is inadequate the Owner will be billed for the shortfall and Owner shall pay such amount within 15 days.

25. MEMBERSHIP FEES AND WATER SERVICE

The owners of parcels that desire to obtain water service from the Association water system must apply for and be issued a membership in the Association and pay a meter installation fee as a condition to receiving water service.

Memberships are subject to availability based on the Association's water rights capacity and Association's ability to otherwise provide water service.

Membership fees include a share of the cost of Association facilities.

Membership fees are adopted by the Association's Board of Trustees and may be revised from time to time without notice.

Payment of all membership fees attributable to a property owner's development are due at the time that a water meter is ordered for the parcels or the lots or buildings within a parcel. No water will be provided through the service meter setter until a meter is installed by the Association. The Association's membership fees are subject to change at any time at the discretion of the Board of Trustees of the Association. Changes in membership fees and all other fees and charges apply to the Owner's property. The Association may but shall have no obligation to notify Owner or any other party of any changes or intended changes to any of Association's rates and charges, including changes in membership fees.

At the time of final acceptance of under the terms of this Agreement, Association may record a document with King County Dept. of Records which imparts notice that Association's membership, meter installation and related fees are due and owing from the owners and prospective owners of the parcels, lots and structures within the Owner's property. Owner hereby consents to the recording of such notice against the Owner's property and all lots, parcels and structures within such property.

Water service will not be provided until final acceptance of the water system extension is accepted by Association and water meters and memberships in Association have been properly paid for and issued.

26. OWNER LIABILITY, INDEMNITY, DEFEND AND HOLD ASSOCIATION HARMLESS

Owner shall be responsible for all property, materials, equipment and personnel utilized in any manner in connection with the Work.

To the maximum extent permitted by law, the Owner shall defend, indemnify, and hold harmless the Association, its Board of Trustees, officers, employees, agents, contractors, consultants and the Association's engineer from any and all liabilities, claims, demands, fines, penalties, and judgments, made or entered against them or any of them, whatsoever for any injuries, loss, or damage, to persons or property arising out of or in any way connected with this Agreement or any act or omission of Owner, its contractors, agents and consultants, other than that resulting solely from the negligence of the Association.

If a court of competent jurisdiction determines that this Agreement is subject to the provisions of RCW 4.24.115 then, in the event of liability for damages arising out of bodily injury to persons or damage to property caused by or resulting from the concurrent negligence of Owner and Association, Owner's liability hereunder shall be limited to the extent of Owner's negligence. Solely for purposes of this indemnification, Owner hereby waives its immunity under RCW Title 51 (State Industrial Insurance). The parties acknowledge and agree that such waiver has been mutually negotiated and bargained for.

The Owner shall assume the defense using counsel satisfactory to Association and shall bear all costs and expenses connected therewith of any claim, suit, recovery or judgment to which the foregoing indemnity applies that may be brought or obtained against the Association, its Board of Trustees, officers, employees, agents, contractors, consultants and engineers. In the event that any lien is placed upon the property of the Association or such other parties identified above, in connection with or as a result of such suits, the Owner shall at once cause the same to be discharged by giving bond or other security acceptable to Association.

27. OWNER'S INSURANCE

a. Promptly upon Association's approval of this Agreement, the Owner shall purchase and maintain during the term hereof insurance policies meeting the requirements set forth herein. The Owner shall file with the Association either a certified copy of all insurance policies with endorsements attached, or a Certificate of Insurance with such endorsements attached as are necessary to comply with the requirements hereof. Failure of the Owner to fully comply with the requirements regarding insurance will be considered a material breach of this Agreement and shall be cause for termination of the Agreement and of any and all Association obligations hereunder.

b. The Owner shall not begin work under the Agreement until all required insurance policies have been obtained and until such insurance has been approved by the Association. Said insurance shall provide coverage for the Owner, the Association and the Association's engineer. The coverage so provided shall protect against claims from bodily injuries, including accidental death, as well as claims for property damage which may arise from any act or omission of the Owner, its contractors, or by anyone directly or indirectly employed by either of them.

c. The insurance policies shall specifically name the Association, its elected or appointed officials, officers, employees and its engineer as additional insureds. The insurance shall be maintained in full force and effect at the Owner's expense throughout the term of the Contract.

d. The Association shall be given at least 45-days written notice of cancellation, nonrenewal, material reduction or modification of coverage. Such notice shall be by certified mail to the Association.

e. The coverage provided by the Owner's insurance policies are to be primary to any insurance maintained by the Association. Any insurance that might cover this Agreement which is maintained by the Association shall be in excess of the Contractor's insurance and shall not contribute with the Contractor's insurance.

f. The Owner's insurance policies shall protect each insured in the same manner as though a separate policy had been issued to each. The inclusion of more than one insured shall not affect the rights of any insured in respect to any claim, suit or judgment made or brought by or for any other Insured or by or for any employee of any other insured. However, this provision shall not increase the limits of the insurer's liability.

h. The General Aggregate provision of the Owner's insurance policies shall be amended to show that the General Aggregate Limit of the policies applies separately to the Extension.

i. The Owner's insurance policies shall not contain deductibles or self-insured retention in excess of $10,000 unless approved by the Association.

j. The Owner's insurance policies shall contain a provision that the Association has no obligation to report events which might give rise to a claim until a claim has been filed with the Association's Board of Trustees.

k. Type and Limits of Insurance Required:

Commercial General Liability

- $1,000,000 each occurrence Bodily Injury and Property Damage liability (Coverage for removal of and disposal of asbestos containing materials, for Contracts dealing with asbestos containing materials.)
- $2,000,000 annual aggregate
- Employees and volunteers as Additional Insured
- Premises and operations
- Broad form property damage including underground, explosion and collapse hazards (XCU)
- Builders All Risk – (applicable only if project includes equipment, facility, building, bridge, retaining wall, or tank extending 4 feet or more above adjacent grade; or any facility less than 4 feet above adjacent grade, designed for human access, and containing more than $50,000 worth of electrical or mechanical equipment.)
- Products completed operations (through guaranty period)
- Blanket contractual
- Subcontractors
- Personal Injury with employee exclusion deleted
- Employers liability (Stop gap)

Automobile Liability

- $1,000,000 per accident Bodily Injury and Property Damage Liability, including:
- Any owned automobile
- Hired automobiles
- Non Owned automobile

Umbrella Liability

- $2,000,000 per occurrence
- $2,000,000 aggregate

l. As an alternative to the above indicated Commercial General Liability and Umbrella Liability insurance policies the Owner may provide the Association with an Owners and Contractors Protective (OCP) Policy with a limit of coverage of $5,000,000.

m. Providing of coverage in the stated amounts shall not be construed to relieve the Owner from liability in excess of such limits.

n. The Owner shall maintain Workers Compensation insurance and/or Longshore and Harbor Workers insurance as required by state or federal statute for all of Owner's employees to be engaged in work on the project under this Agreement and, in case any such work is left to one or more Contractors, the Owner shall require the Contractors similarly to provide workers compensation insurance and/or Longshore and harbor workers insurance for all of their employees engaged in the Work.

In the event any class of employees engaged in the Work under this Agreement is not covered under Workers Compensation insurance or Longshore and Harbor Workers insurance as required by state and federal statute, the Owner shall maintain and cause each subcontractor to maintain Employers Liability insurance for limits of at least $1,000,000 each employee for disease or accident, and shall furnish the Association with satisfactory evidence thereof.

o. The contractual coverage of the Owner's policy shall be sufficiently broad enough to insure the provisions of the hold harmless and indemnification provisions of this Contract.

28. ATTORNEYS' FEES

In the event either party hereto commences legal action, including appeals, against the other to enforce the provisions of this Agreement or for damages for breach thereof, the prevailing party, as determined by the court, shall be entitled to recover its attorney fees and costs actually incurred from the other party. The amount incurred shall be presumed to be reasonable, but such presumption may be rebutted.

29. JURISDICTION AND VENUE

The parties agree that the Superior Court of the State of Washington shall have jurisdiction over any dispute that arises between them and that the venue shall be in King County.

30. NOTICES TO THE PARTIES

Any notice or other communication, given by a party to the other under this Contract, shall be considered properly served if personally delivered deposited in the U. S. Mail, postage prepaid in any post office and addressed to the Owner at the address set forth below.

31. ASSIGNMENT OF CONTRACT

The Owner shall not assign this Contract, or any part thereof, or any monies due, without the prior written consent of the Association and the Surety. Consent of the Surety will not be required if the Surety has waived its right to notice of assignment.

32. WARRANTIES OF OWNER

Owner warrants to Association, upon completion and final acceptance of the Work by resolution of the Association's Board of Trustees, as follows:

a. The Owner has the right to construct and install the Extension in and upon the land area in which it is to be installed. The Owner owns without encumbrance the facilities and real property interests which constitute the Extension and that title to the Extension and all easements upon which the Extension is situated, shall be vested in Association upon final acceptance of this Agreement free and clear of encumbrances, liens or defects. The Owner will defend the title and right of possession of the Association against all third party claims.

b. The Extension will be constructed in a good and workmanlike manner in accordance with the Plans and Specifications and this Agreement and is readily operable as an integral part of the Association's system.

c. All copies of warranties or guarantees from the Owner's contractor, subcontractors and suppliers are fully enforceable. If such warranties extend beyond the warranty period as provided in this Agreement, Owner shall, upon request by Association, assign and deliver them to the Association.

d. For a period of 2 years from the date of final acceptance by the Association of the Extension or 1 year after final lift of asphalt has been completed, whichever is longer, all parts of the Extension are guaranteed by the Owner to remain in good working order and condition pursuant to the terms hereof. Except in the event of emergencies in which case Owner shall respond to a warranty claim as quickly as possible, the Owner shall start work to repair or replace, at his own expense, any defective Work discovered during the period of this guarantee within 7 days of mailing notice of discovery of a defect by Association. Repairs and replacement work shall be promptly completed in a good and workmanlike manner. Notwithstanding the foregoing, if Association repairs such defective work to abate an emergency or to continue or resume water service, Owner shall pay the cost thereof and such work by Association shall not be deemed to be a waiver of Association's rights hereunder. The warranty period for any corrective work may be extended for a reasonable time not to exceed 1 year to ensure that all corrections shall perform as required herein.

33. DURATION

This Agreement shall be valid and in force for 18 months from the date of approval by Association and for the term of any warranty period and indemnity obligations hereunder. If the Extension is not completed and Association has not issued final acceptance within such period, then the Owner's rights under this Agreement shall cease and the Agreement shall expire unless Association extends the term of the Agreement. The term of this Agreement may be extended for a period of up to 1 year by the Association’s Board of Trustees upon application prior to the expiration of the term by Owner for good cause. The extension of the term hereof may only be granted by motion of Association’s Board of Trustees and only if the Agreement has been actively prosecuted and all fees and charges due to Association have been paid.

This Agreement shall become null and void upon expiration or termination (except for warranty and indemnification obligations) and no further Work shall be performed on the Extension after that date except as expressly required herein relation to the restorative work. In order to perform any Work after expiration or termination of this Agreement, Owner shall submit to Association and obtain Association’s approval of a new application for an Owner extension agreement for the Extension. Any such new agreement entered into between the Association and the Owner shall be subject to any new or amended resolutions, rates, rules and policies of Association which have taken effect since the execution of the original agreement.

34. MISCELLANEOUS

This Agreement shall be governed by and interpreted in accordance with the law of the State of Washington. This Agreement represents the entire agreement between the parties concerning the subject matter hereof. This agreement may only be amended by an addendum hereto, mutually executed and approved by motion or resolution of Association’s Board of Trustees.

Executed at North Bend, WA, this ___________ day of ___________________, 20____

OWNER: _________________________________

By: __________________________________

(Authorized Signature for Owner)
Address: ____

Accepted and Approved by the Board of Trustees by motion this ___________________
day of ____________________, 20____
SALLAL WATER ASSOCIATION

By: ______________________________ By: ______________________________
President Secretary

Exhibit A
General description of property to be served and proposed routing of water main extension

Exhibit B
A Legal Description to Owner's Property

ATTACHMENT A

PERFORMANCE AND PAYMENT BOND

NAME OF PROJECT: ____

KNOW ALL MEN BY THESE PRESENTS: That whereas SALLAL WATER ASSOCATION, a Washington non-profit corporation, hereinafter designated as the "Association" has entered into a developer extension agreement dated the _______day of ______ ________________("Agreement") with: ________________________________ ____ hereinafter designated as the "Developer", granting permission and authority to install water works improvements consisting of an extension to the water system as therein described, which Agreement is on file in the Association office and by this reference is made a part hereof; and

WHEREAS, said Developer is required under the terms of said Agreement to furnish a bond for the faithful performance of said Agreement in accordance with the conditions hereafter set forth,

NOW, THEREFORE, We, the undersigned Developer as Principal, and:

____

a corporation organized and existing by virtue of the laws of the State of ___________________ , and duly authorized to do a surety business in the State of Washington, as surety, are held and firmly bound under the State of Washington, and said Association in the sum of:

____

[$______________], for the payment of which we do jointly and severally bind ourselves, our heirs, executors, administrators, personal representatives, successors, and assigns by these presents.

THE CONDITIONS OF THIS OBLIGATION are such that if the said principal, his (or its) representatives, heirs, successors and assigns shall well and truly keep and observe all of the covenants and conditions and agreements in the Agreement and shall faithfully perform all the provisions thereof and pay all laborers, mechanics, and subcontractors with provisions and supplies for carrying on such work and shall indemnify and save harmless the Association, its officers and agents, from any pecuniary loss resulting from the breach of any of said terms, covenants and conditions to be performed by the principal; then this obligation shall become null and void; otherwise, it shall be and remain in full force and effect.

No change, extension of time, alteration or addition to the Work to be performed under the agreement shall in any way affect Principal's or surety's obligation on this bond and surety does hereby waive notice of any change, extension of time, alteration or additions thereunder.

This bond is made, executed and delivered by the Principal and surety to the Association for the use and benefit of said Association together with all laborers, mechanics, subcontractors, materialmen, and all persons who supply such person or subcontractors with provisions and supplies for the carrying on of the Work covered by the Agreement.

IN WITNESS WHEREOF, the said Principal and said surety, have caused this bond to be signed and sealed by their duly authorized officers,

This ______ day of ____________________________, ___________

____
PRINCIPAL

____
AUTHORIZED REPRESENTATIVE

SURETY

COUNTERSIGNED:

By: __________________________________ By:__________________________________

(attach notarization and evidence of authority of execution)

ASSIGNMENT OF FUNDS
IN LIEU OF PERFORMANCE BOND

STATE OF WASHINGTON)
) ss.
COUNTY OF KING)

WE HEREBY AGREE that the sum of $______________ will be held in account number ______________ in the name of the Sallal Water Association to assure performance requirements hereunder.

NOW, THEREFORE, the conditions of these obligations are such that the principal will construct all improvements in full compliance with all the requirements of the Sallal Water Association for the project _____________________________________, as listed below:

	PROJECT ELEMENT	VALUE
1.	___________________________	___________________________
2.	___________________________	___________________________
3.	___________________________	___________________________
4.	___________________________	___________________________
5.	___________________________	___________________________
6.	___________________________	___________________________

The above-listed project elements are to be completed within one year from the date of assignment of funds approval, or as later may be amended and evidenced by a letter of amendment for the Sallal Water Association s. This letter shall remain in force and effect until such time as the project elements have been completed and funds released by letter from the Sallal Water Association.

WE FURTHER AGREE that up to the full assigned amount shall be released to the Sallal Water Association upon written demand by the Sallal Water Association. The amount demanded by the Association
or designee will be a good faith estimate of the actual cost of the repairs or improvements.

WE FURTHER AGREE that if it is necessary for the Sallal Water Association to take any legal action against any signatory to the Agreement to assure the proper completion of this project, the Sallal Water Association will be entitled to reasonable costs and attorney's fees.

It shall be the responsibility of both the Principal to inform the Sallal Water Association if it changes addresses. Change of address should be mailed to the City of Sallal Water Association, P.O. Box 378, North Bend, WA 98045. The Association will mail only to the last known address of Principal.

DATED this ___________ day of _______________, 20_____.

________________________________ Principal	______________________________________ Name of Financial Institution
________________________________ Address	______________________________________ Address
________________________________ City, State and Zip Code	______________________________________ City, State and Zip Code

ATTACHMENT A

ASSIGNMENT OF FUNDS

Plat:
Requested By:
Date of Request:

ITEM	QTY	UNIT	PRICE PER UNIT	TOTAL	% COMPLETE	RELEASE AMOUNT

SUBTOTAL	**$**______________	**$**_________________
TAX	**$**______________	**$**_________________
TOTAL OF WORK	**$**______________	**$**_________________

Authorization to Release Funds:
Signature:____ Title: ___________________________________

ATTACHMENT A

SALLAL WATER ASSOCIATION
MAINTENANCE BOND FOR DEVELOPER WATER EXTENSIONS

NAME OF PROJECT: ____

KNOW ALL MEN BY THESE PRESENTS: WHEREAS Sallal Water Association of King County, Washington, a non-profit, consumer owned corporation, hereinafter designated as the "Association" has entered into an agreement ("Agreement") dated the ____ day of ____________________, __________ with:

____

hereinafter designated as the "Developer," which grants Developer the permission and authority to install water system improvements consisting of an extension to the Association's water system as therein described, which Agreement is on file in the Association office and by this reference is made a part hereof; and said water system improvements have been completed and accepted by Resolution No. ____ of the Management Board of the Association adopted this ____ day of _____________________, _________.

WHEREAS, said Developer is required under the terms of said Agreement to furnish a bond in accordance with the conditions hereafter set forth, warranting the satisfactory performance of the water system improvements for the period hereafter set forth.

NOW, THEREFORE, We, the undersigned Developer as Principal and:

____

a corporation organized and existing by virtue of the laws of the State of ________________, and duly authorized to do a surety business in the State of Washington, as Surety, are held and firmly bound under the State of Washington, and said Association as Obligee in the sum of:

____

[$_____________], for the payment of which we do jointly and severally bind ourselves, our heirs, executors, administrators, personal representatives, successors, and assigns by these presents.

NOW, THEREFORE, THE CONDITIONS OF THIS OBLIGATION are such that if: the water system improvements constructed by the Principal shall successfully operate for a period of two years from the date of acceptance by the Association or one year from the date of installation of the final lift of asphalt, whichever is later, and shall remain free of defects in workmanship and materials for such then this obligation shall be null and void, otherwise to remain in full force and effect.

IT IS FURTHER EXPRESSLY PROVIDED THAT:

1. Until written release of this obligation by the Obligee, this bond may not be terminated or canceled by the Principal or Surety for any reason.

2. Damage caused by the Principal, Developer or other parties arising out of construction activities in and around such water system improvements shall be considered "defects" for purposes of this bond.

3. In the event of failure of the water system improvements to satisfactorily perform or in the event of a defect in workmanship or materials, the Principal or Surety shall promptly make repairs to correct the failure or defect. In the event such repairs are not made by the Principal or Surety within seven days of notice by Association, the Surety shall, upon demand, tender the total bond amount to the Obligee. After making the necessary repairs, the Obligee will return any unexpended funds, without interest, to the Surety.

4. In the event the Obligee determines that repairs must be performed immediately without notice to prevent risk or loss or damage to person and property, the Obligee may make the repairs and the costs of those repairs shall be paid by the Principal or Surety.

5. The obligation of Principal to make the repairs described above, shall not be limited by the amount of this bond.

SIGNED this ____ day of _____________________, ____________ .

___________________________________	_________________________________
Principal	Surety
___________________________________	_________________________________
Address	Address
	_________________________________
	City, State, Zip
	By: _____________________________
	Attorney-in-Fact (attach Power of Attorney)
	_________________________________
	Address
	_________________________________
	City, State, Zip

Bonding Agency Information

Name of Bonding Agency: ________________________________

Contact: ________________________________

Address: ________________________________

____

____

Telephone Number: ________________________________

ATTACHMENT A

SURETY ACKNOWLEDGEMENT

STATE OF WASHINGTON)
) ss.
County of King)

On this _____________ day of ___________________, _____, before me, the undersigned, a Notary Public in and for the State of Washington, duly commissioned and sworn, personally appeared ____________________________________, to me known to be the _________________________, of ____, the corporation that executed the foregoing instrument, and acknowledged the said instrument to be the free and voluntary act and deed to said corporation, for the uses and purposes therein mentioned, and on oath states that _______________________________ was authorized to execute said instrument and that the seal affixed is the corporate seal of said corporation.

____
NOTARY PUBLIC in and for the State of Washington
My Commission Expires:____________________________

DEVELOPER/OWNER

STATE OF WASHINGTON)
) ss.
County of King)

On this _____________ day of ___________________, _____, before me, the undersigned, a Notary Public in and for the State of Washington, duly commissioned and sworn, personally appeared ____________________________________, to me known to be the _________________________, of ____, the corporation that executed the foregoing instrument, and acknowledged the said instrument to be the free and voluntary act and deed to said corporation, for the uses and purposes therein mentioned, and on oath states that _______________________________ was authorized to execute said instrument and that the seal affixed is the corporate seal of said corporation.

____
NOTARY PUBLIC in and for the State of Washington
My Commission Expires:____________________________

ATTACHMENT A

SALLAL WATER ASSOCIATION
ASSIGNMENT OF FUNDS
IN LIEU OF MAINTENANCE BOND

Project Name: ____

Developer/Principal: ____

In lieu of a maintenance bond, we hereby agree that the sum of $_________________ will be held in savings account number ____________________ in _________________ in the name of the Sallal Water Association to assure maintenance requirements hereunder.

Now, therefore, the conditions of these obligations are such, that the principal shall replace or correct any part or parts of all improvements, installed under Plans approved by the Sallal Water Association for the above referenced project discovered by the Sallal Water Association to be defective in material or inefficient or otherwise unsatisfactory in operations, through faulty construction, materials or workmanship, or through any fault of design or detail arising with design engineer, Contractor or manufacturer within two years of the acceptance of the work (-_______) and transfer of title or one year from the date of installation of the final lift of asphalt, whichever is later,. .

IT IS FURTHER EXPRESSLY PROVIDED THAT:

Damage caused by the Principal, Developer or other parties arising out of construction activities in and around such water system improvements shall be considered “defects” for purposes of this bond.

In the event of failure of the water system improvements to satisfactorily perform or in the event of a defect in workmanship or materials, the Developer/Principal shall promptly make repairs to correct the failure or defect. In the event such repairs are not made by the Developer/Principal within seven days of notice by Association, the Association may make the repairs and withdraw the necessary funds from the account to cover the costs of the repairs.

In the event the Association determines that repairs must be performed immediately without notice to prevent risk or loss or damage to person and property, the Association may make the repairs and the costs of those repairs shall be paid by the Developer/Principal within 10 working days or the funds shall be withdrawn from the account.

We further agree that if it is necessary for the Association to take any legal action against any signatory to this agreement to assure compliance with its terms, the Association shall be entitled to its reasonable costs and attorney’s fees.

It shall be the responsibility of both the principal and the financial institution to inform the Association, in writing, of any change of mailing address. The Association will mail only to the last known address of principal and financial institution.

Signed this ________ day of _________, 20____.

___________________________________ Principal	___________________________________ Name of Financial Institution
___________________________________ Address	___________________________________ Address
___________________________________ City, State, Zip	___________________________________ City, State, Zip
Phone No. _________________________	Phone No. _________________________

________________________________	________________________________
Signature of Principal	Signature of Bank Official
________________________________	________________________________
Print Name and Title	Print Name and Title

STATE OF WASHINGTON:)
) ss.
COUNTY OF KING:)

I Certify that I know or have satisfactory evidence that ____ is the person who appeared before me, and said person acknowledged that he/she signed this instrument, on oath stated that he/she was authorized to execute the instrument and acknowledgment it as the officer of _________________________ to be the free and voluntary act of such party for the uses and purposes mentioned in the instrument.

Dated: _____________________________
(seal or stamp)

____
Notary Public (Title) in and for the State of Washington,
Residing at ____
____
Print Name
My appointment expires: __________________________

ATTACHMENT A

EASEMENT FOR UTILITIES

THIS EASEMENT is made on the _____ day of __________________, _______ (“Effective Date”) by ______________________________________, a Washington corporation (“Grantor”).

1. Grant and Location of Easement. Grantor hereby grants and conveys to the City of Granite Falls, a municipal corporation (“Grantee”), its successors and assigns, a non-exclusive, perpetual utility easement (“Easement”) with immediate right of entry and continued access over, under, and across the real property legally described on Exhibit A.

2. Purpose of Easement. The purpose of this Easement is for the construction, improvement, maintenance, repair and replacement of underground utilities, including but not limited to an underground water, storm drainage, and sanitary sewer pipes, and other appurtenant structures.

3. Repairs to Surface of Easement. Grantee shall repair the surface of the easement to a reasonable condition after it performs any work on the utility pipes, water mains, and its appurtenant structures.

4. Interference. Grantor may use the surface above the Easement, PROVIDED that its use does not interfere with or cause damage to the utility pipes, water mains, and appurtenant structures, PROVIDED FURTHER that prior to constructing any building or planting any trees within the Easement Grantor shall obtain the written consent of Grantee, which consent shall not be unreasonably withheld. Grantor may construct a wooden, metal or similar fence or other obstruction on Grantor’s property that is feasible to disassemble and re-assemble, PROVIDED however that Grantor does not prohibit or impede Grantee’s access to the Easement. Grantor may grant other non-exclusive easement rights in and to the Easement; PROVIDED, however, that no other utility pipe, line, or structure shall be located closer than five (5) feet parallel to the Grantee’s utility pipe, water main, and/or appurtenances; and, PROVIDED FURTHER, that prior to installation of any utility pipe, line, or structure that crosses the Easement, Grantor shall obtain the written consent of Grantee, which consent shall not be unreasonably withheld. If, in exercising any right to use the surface above the Easement or grant other easements, the Easement is disturbed, Grantor shall return the Easement to its condition and grade prior to its disruption, at Grantor’s sole cost and expense.

5. Title. The Grantor warrants that the Grantor is vested with clear and marketable title to the above property.

6. Successor and Assigns. This easement shall run with the property and be binding on the parties, their successors, and assigns.

____
A Washington corporation

By: ____________________________
Its: ____________________________

STATE OF WASHINGTON)
): ss.
County of Snohomish)

On this day personally appeared before me ______________________________ to me known to be the person who executed the within instrument as the __________________________ of ______________________________________, the corporation that executed the within and foregoing instrument, and acknowledged the said instrument to be the free and voluntary act and deed of said corporation, for the uses and purposes therein mentioned, and on oath stated that he/she is authorized to execute the said instrument and that the seal affixed in the corporate seal of said corporation.

GIVEN under my hand and official seal this ____________ day of ________________, __________.

____
____
(Type/Print Name)
Notary Public in and for the State of Washington,
residing at __________________________________.
My appointment expires: ___________________.

ATTACHMENT A

SALLAL WATER ASSOCIATION

BILL OF SALE

KNOW ALL BY THESE PRESENTS that for and in consideration of the sum of One Dollar ($1.00) and other good and sufficient consideration, receipt whereof is hereby acknowledged, the undersigned grantor(s) ______________________________________ do(es) by these presents hereby convey, set over, assign, transfer and sell to the Sallal Water Association, King County, Washington, a non-profit, customer owned corporation, the following described water system and all appurtenances thereto, situated within the in the Sallal Water Association service area within , King County, Washington:

DESCRIPTION	ALONG	FROM	TO	SIZE	LENGTH

the said grantor(s) hereby warrants that he, they, it, is/are the sole owner(s) of all the property above described; that they have full power to convey all rights herein conveyed and agree to hold the Sallal Water Association harmless from any and all claims which might result from execution of this document.

IN WITNESS WHEREOF the grantor(s) has/have executed these presents this _____ day of __________, 20____.

STATE OF WASHINGTON)
) ss.
KING COUNTY)

On this _____ day of __________, 20_____, before me the undersigned Notary Public personally appeared ________________________, to me known to be the individual(s) who executed the within and foregoing instrument and acknowledged that___ he___ signed and sealed the same as ________ free and voluntary act and deed, for the uses and purposes therein mentioned.

GIVEN under my hand and official seal the day and year in this certificate above written.

____
Notary Public in and for the State of Washington

Residing at _____________________________________

____

ATTACHMENT A

ATTACHMENT A

STANDARD DETAILS

ATTACHMENT A

LIST OF STANDARD DETAILS

Title of Drawing	**File Name**
Water Main Trench Section	W1
Fire Hydrant Assembly	W2
Fire Hydrant Location In Cut of Fill	W3
Relocate Fire Hydrant Assembly	W4
Valve Box	W5
Valve Box Adjustment	W6
Valve Extension Stem	W7
Wet Tap Connection	W8
Cut In Connection	W9
Testing Connection Detail	W10
2" – Blowoff Assembly	W11
1" Air and Vacuum Release Assembly	W12
2" Air and Vacuum Release Assembly	W13
1" and Smaller Water Service	W14
2" Water Service	W15
Meter Vault Assembly 3" Through 10"	W16A
Meter Vault Assembly 3" Through 10"	W16B
Double Check Valve Assembly 2" & Smaller	W17
Reduced Pressure Backflow Assembly – 3/4" to 2"	W18
Pressure Reducing Valve and Vault	W19A
Pressure Reducing Valve and Vault	W19B
Water Sampling Station Valve Vault	W20
Double-Check Detector Backflow Prevention Assembly	W21
Vertical Anchor Block	W22
Thrust Block Detail 1 of 2	W23A
Thrust Block Detail 2 of 2	W23B
Thrust Restraint for Ductile Iron Pipe	W24

ATTACHMENT A

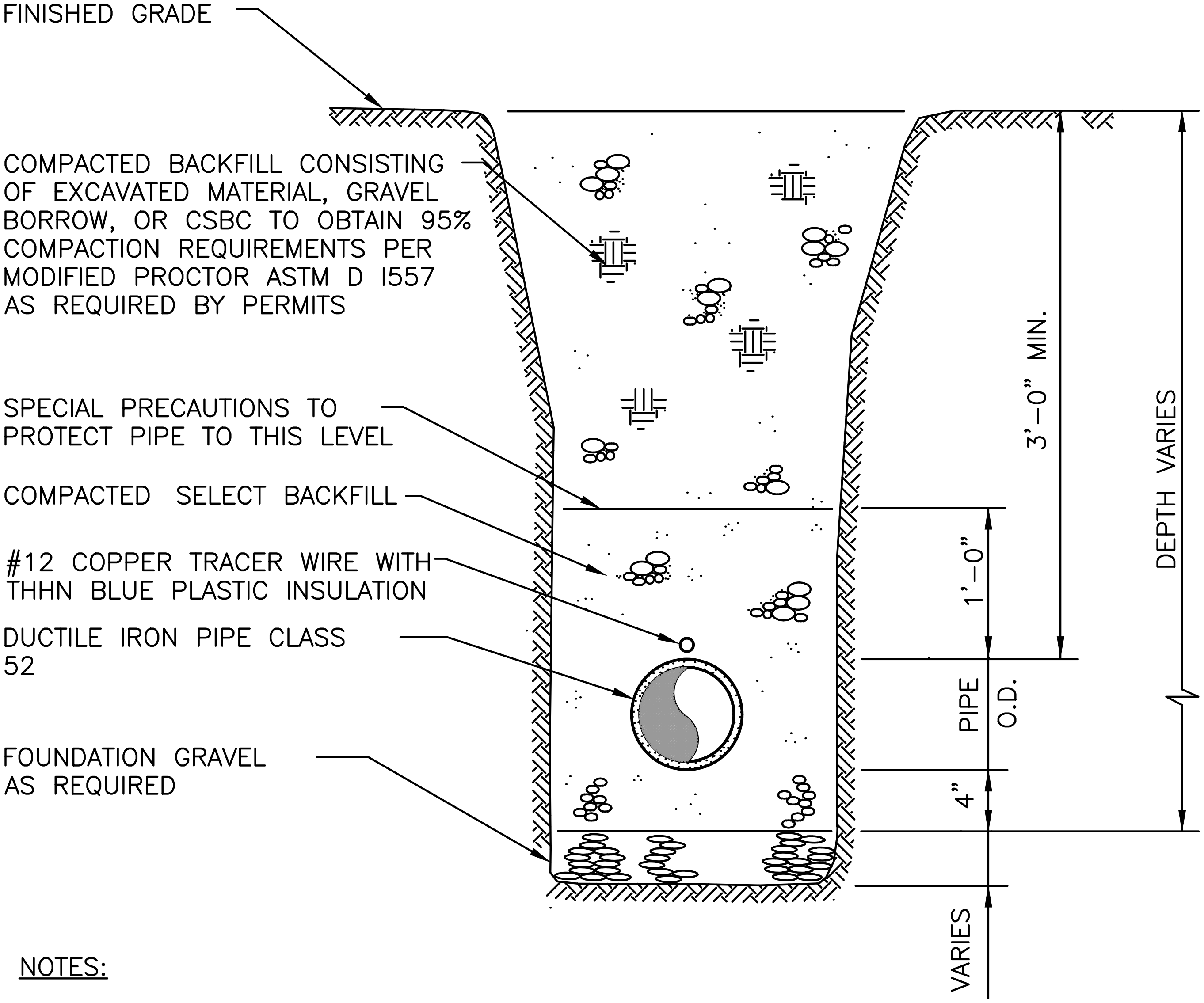

NOTES:

1. BACKFILL MATERIAL AND COMPACTION SHALL BE IN CONFORMANCE WITH ASSOCIATION STANDARDS AND/OR COUNTY, CITY, STATE PERMIT REQUIREMENTS.
2. SELECT BACKFILL SHALL BE GRAVEL BACKFILL FOR PIPE ZONE BEDDING OR EQUIVALENT.
3. DEPTH OF COVER IN EXCESS OF 7–FEET REQUIRES ASSOCIATION APPROVAL.
4. BACKFILL SHALL BE 100% CRUSHED SURFACING BASE COURSE FOR ROAD CROSSINGS.
5. CDF MAY BE REQUIRED IN SPECIAL CIRCUMSTANCES.

WATER MAIN TRENCH SECTION

Sallal Water Association
STANDARD DETAILS

W1

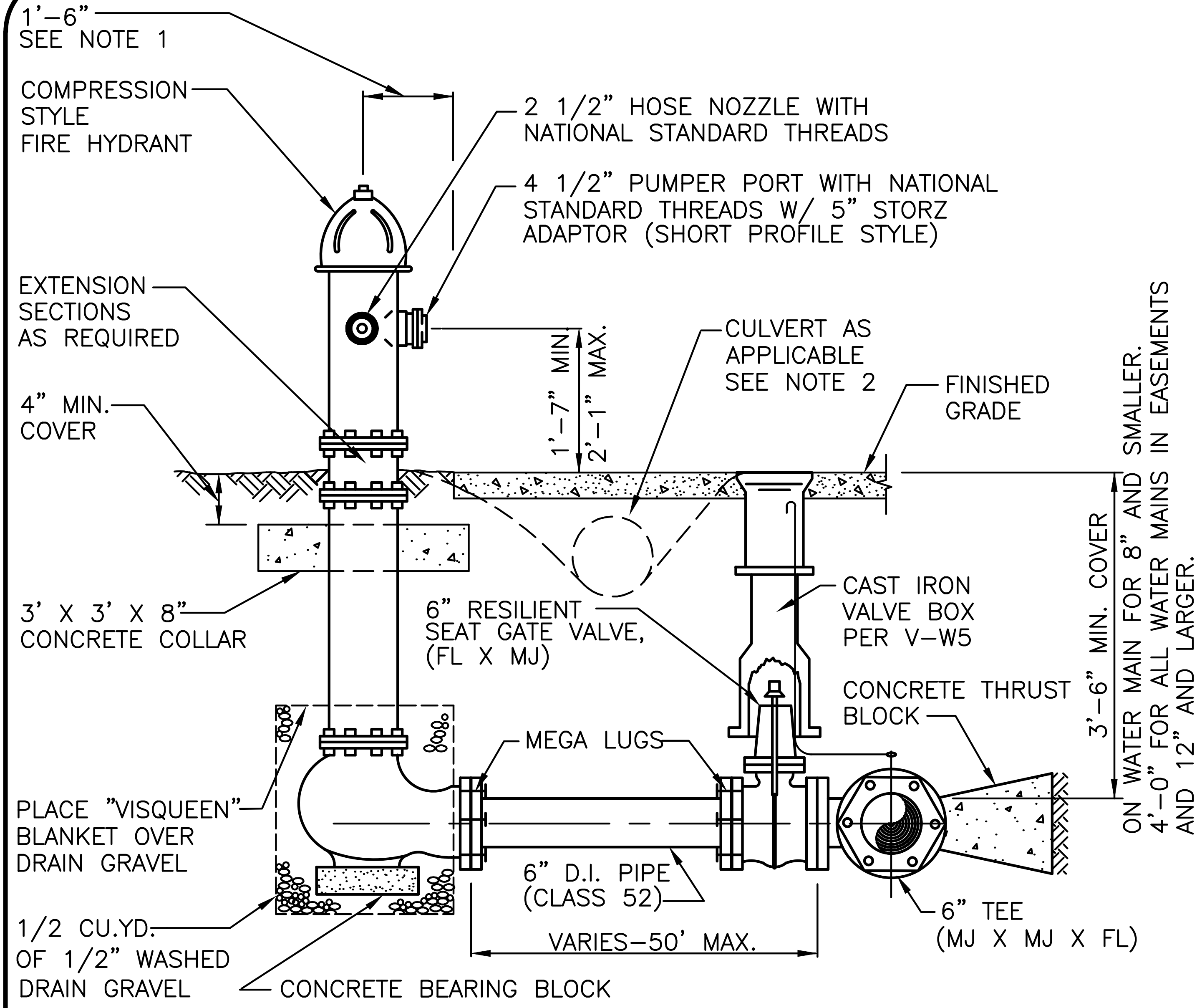

NOTES:

1. BACK OF SIDEWALK OR 3' FROM BACK OF CURB.
2. PROVIDE 10' OF CULVERT (MIN), 12" MIN. DIA. OR EQUAL IN SIZE TO ADJACENT DITCH CROSSINGS. PIPE TO COUNTY, STATE OR CITY STANDARDS AS APPLICABLE. 12" MINIMUM COVER.
3. PROVIDE MIN. 3'-0" CLEARANCE AND LEVEL AREA AROUND HYDRANT.
4. PAINT FIRE HYDRANT WITH TWO COATS KELLY MOORE 6100-516 YELLOW.
5. STENCIL FOOTAGE TO VALVE ON HYDRANT UNDER PORT FACING GV.
6. INSTALL GUARD POSTS AS REQUIRED.
7. ACCEPTABLE HYDRANTS: M&H STYLE 129 OR 929, MUELLER CENTURION 250.
8. INSTALL BLUE FIRE HYDRANT REFLECTOR. OFFSET 1 FOOT FROM ROAD CENTERLINE.

FIRE HYDRANT ASSEMBLY

Sallal Water Association
STANDARD DETAILS

W2

ATTACHMENT A

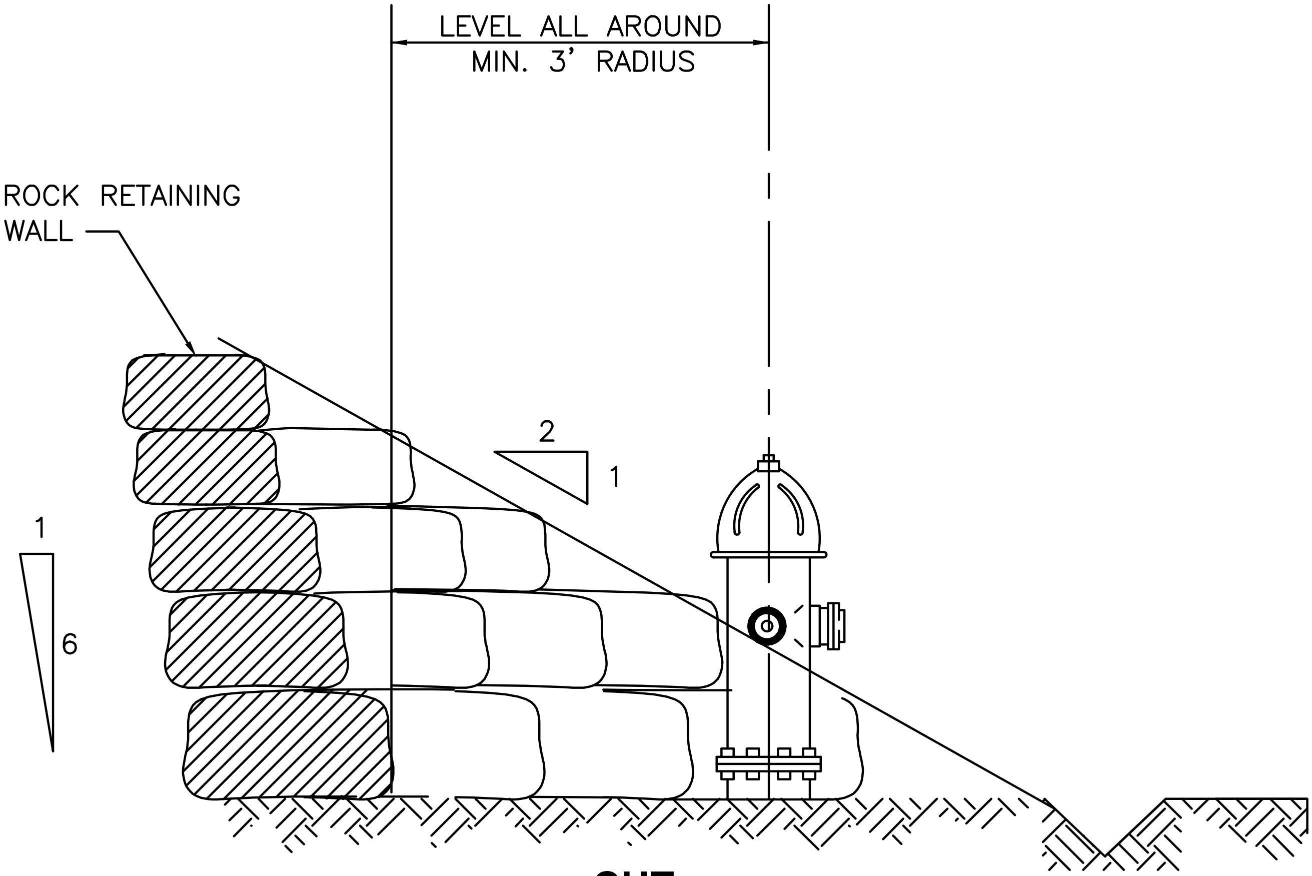

CUT

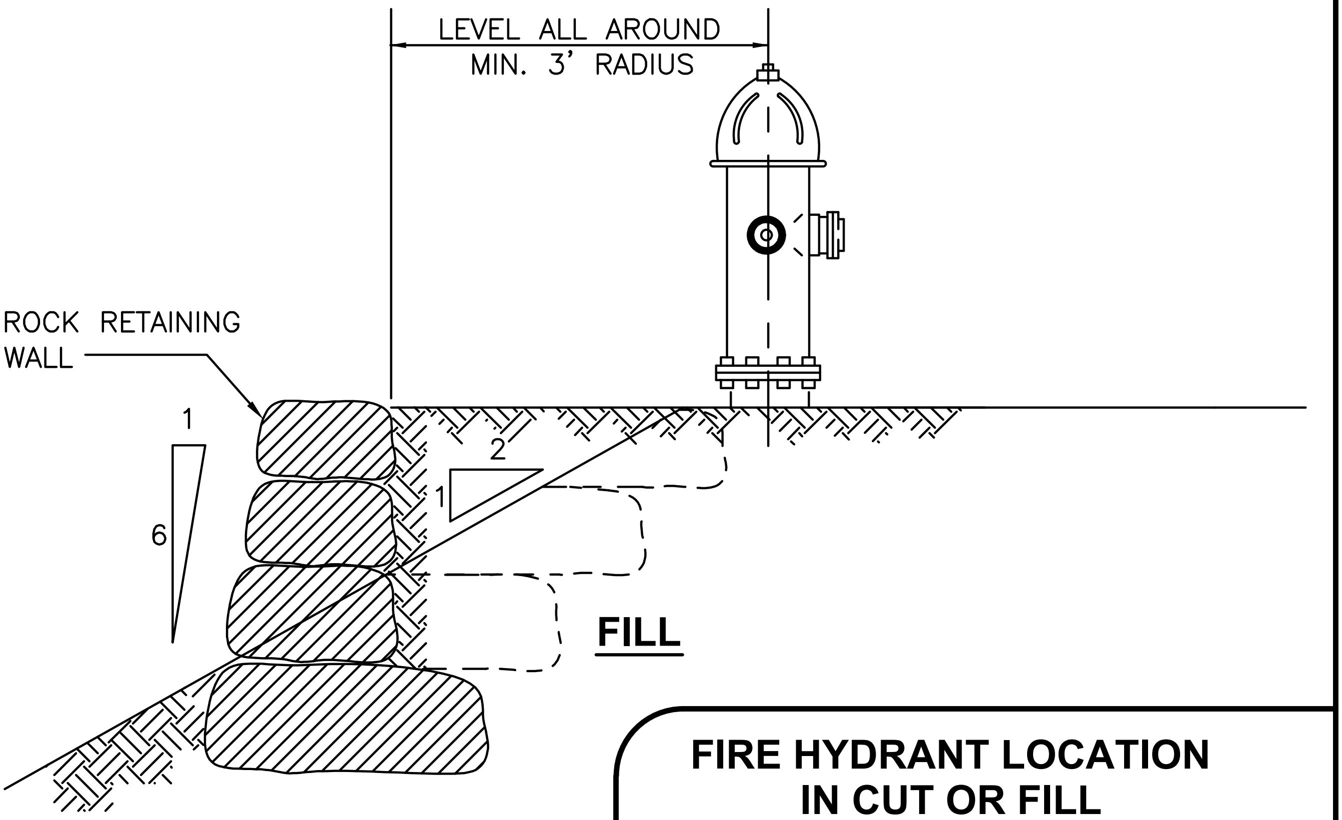

FILL

FIRE HYDRANT LOCATION IN CUT OR FILL

Sallal Water Association

STANDARD DETAILS

W3

M:\SALLAL\STANDARDS\W3 – HYDRANT IN CUT OR FILL.DWG

NOTES:

1. FIRE HYDRANT MUST MEET ASSOCIATION REQUIREMENTS. FOR NEW HYDRANTS (SEE W2). REPLACE WITH NEW FIRE HYDRANT IF REQUIRED.
2. BACK OF SIDEWALK OR 3' FROM BACK OF CURB.
3. PROVIDE 10' OF CULVERT (MIN), 12" MIN. DIA. OR EQUAL IN SIZE TO ADJACENT DITCH CROSSINGS. PIPE TO COUNTY, STATE OR CITY STANDARDS AS APPLICABLE. 12" MINIMUM COVER.

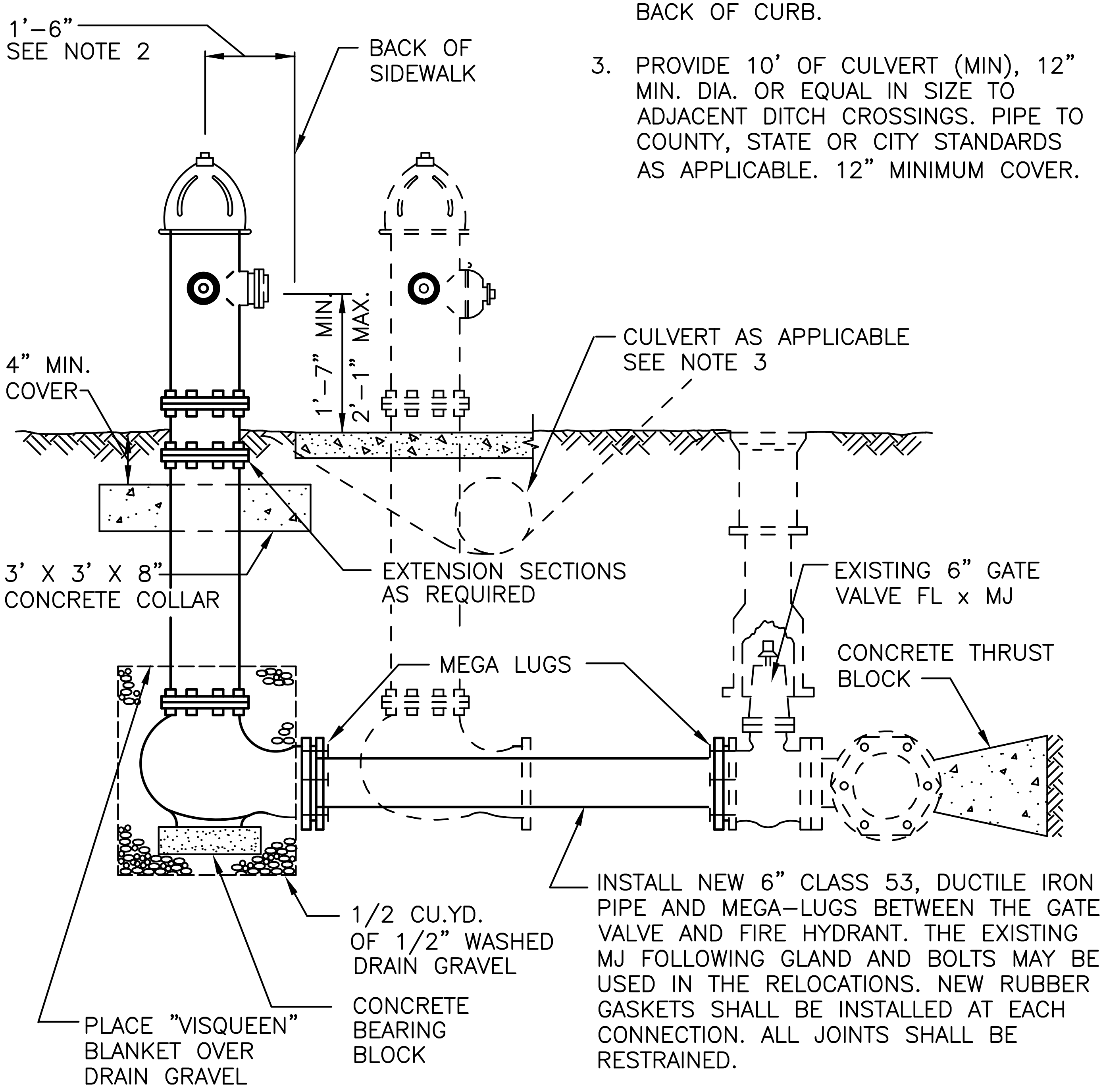

INSTALL NEW 6" CLASS 53, DUCTILE IRON PIPE AND MEGA–LUGS BETWEEN THE GATE VALVE AND FIRE HYDRANT. THE EXISTING MJ FOLLOWING GLAND AND BOLTS MAY BE USED IN THE RELOCATIONS. NEW RUBBER GASKETS SHALL BE INSTALLED AT EACH CONNECTION. ALL JOINTS SHALL BE RESTRAINED.

RELOCATE
FIRE HYDRANT ASSEMBLY

Sallal Water Association
STANDARD DETAILS

W4

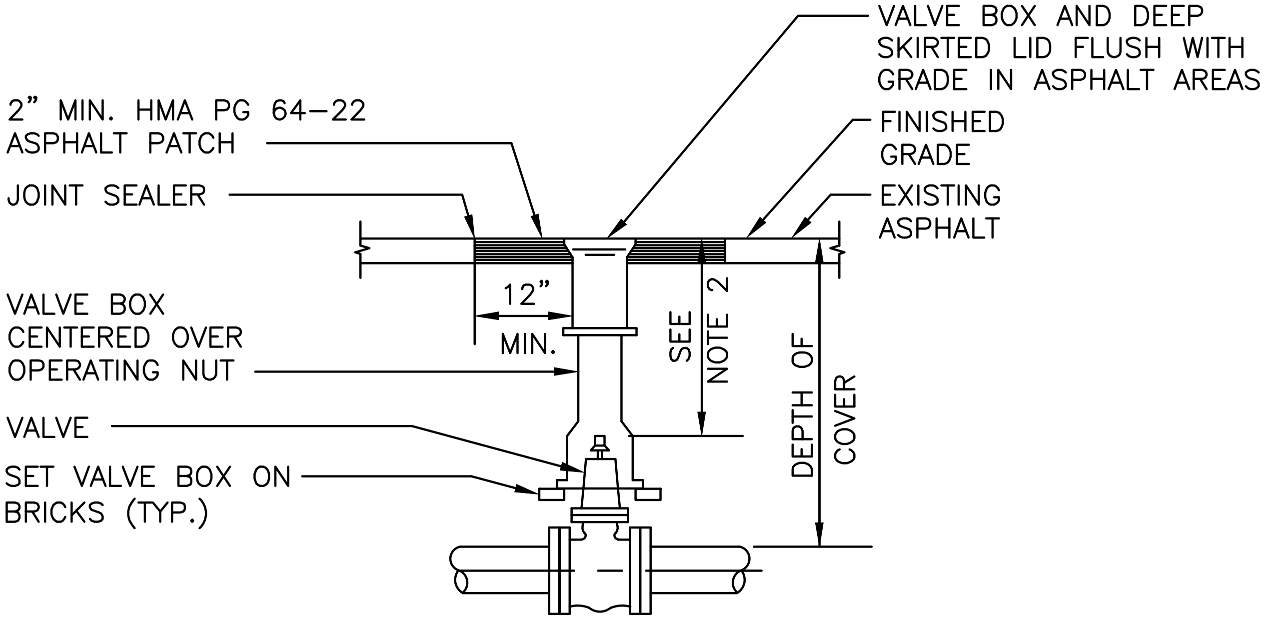

VALVE BOX IN ASPHALT AREA

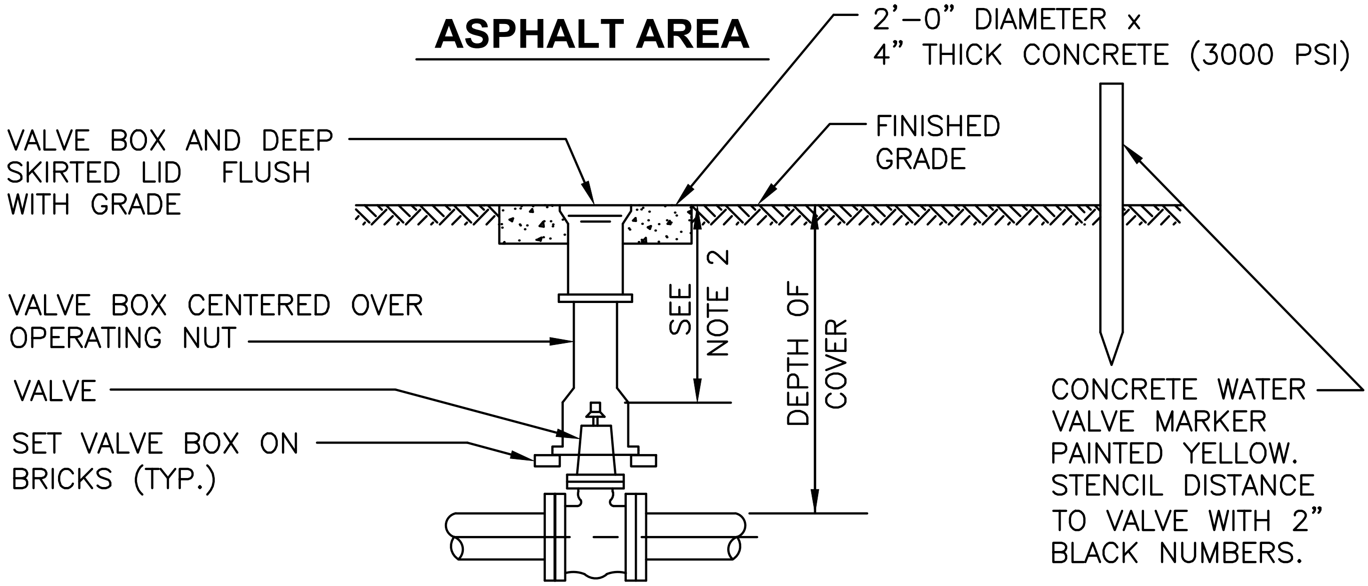

VALVE BOX IN UNIMPROVED AREA (VALVE MARKER REQUIRED)

NOTES:

1. EACH VALVE SHALL BE PROVIDED WITH AN ADJUSTABLE CAST IRON VALVE BOX OF 5 INCHES (5") INSIDE DIAMETER. VALVE BOXES SHALL HAVE A TOP SECTION WITH AN EIGHTEEN INCH (18") MIN. LENGTH. THE VALVE BOX SHALL BE OLYMPIC FOUNDARY No. 940 OR EQUAL.
2. 18" MINIMUM, 24" MAXIMUM FOR OPERATOR NUT IF EXTENSION IS REQUIRED.
3. VALVE BOX EARS SHALL BE PLACED IN LINE WITH THE PIPE IT SERVES.

VALVE BOX

Sallal Water Association
STANDARD DETAILS

ATTACHMENT A

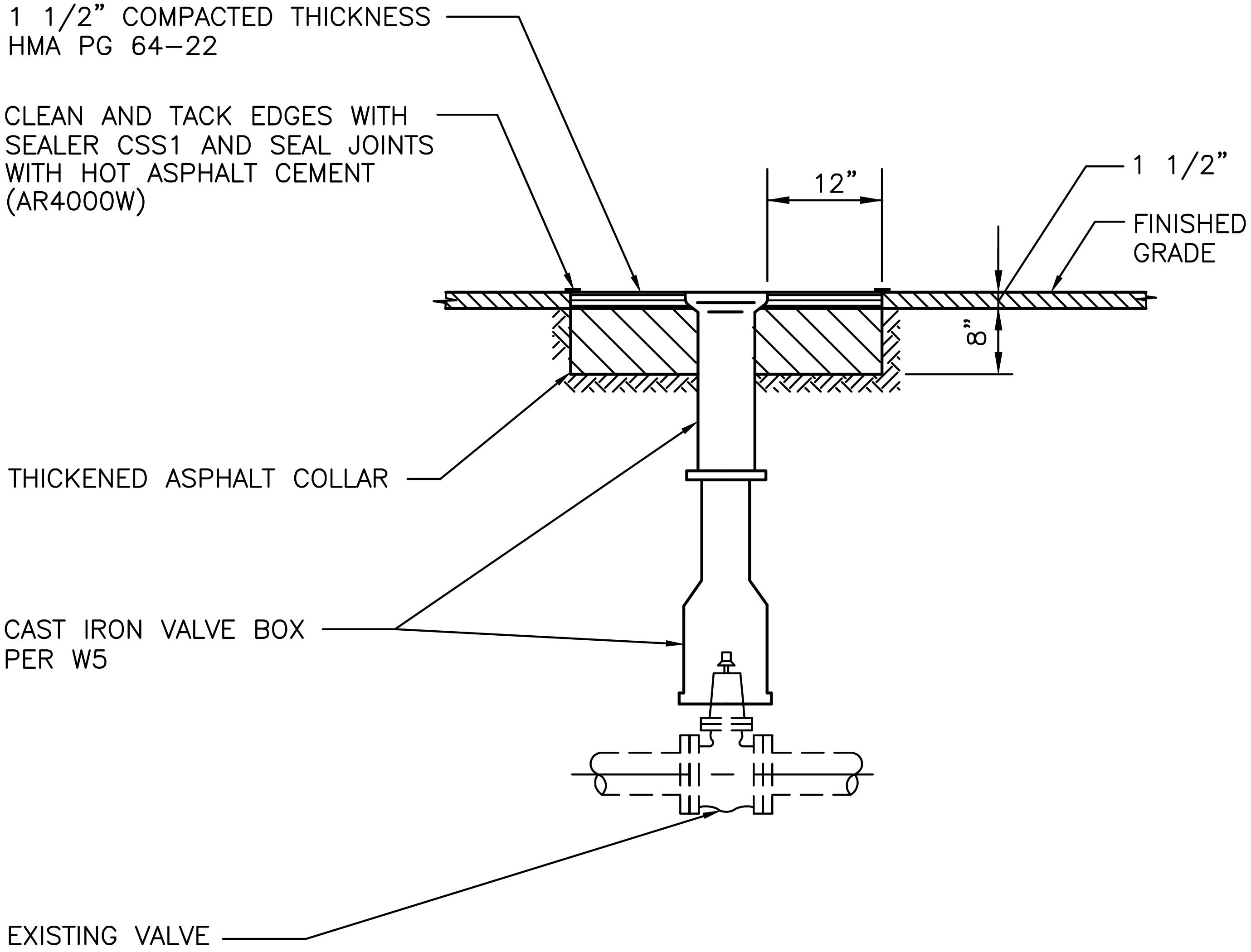

NOTES:

1. ALL EXISTING CONCRETE VALVE BOXES SHALL BE REPLACED WITH CAST IRON BOXES AND ADJUSTED TO GRADE.
2. ALL EXISTING CAST IRON VALVE BOXES SHALL BE ADJUSTED TO GRADE OR NEW CAST IRON BOXES INSTALLED.
3. ALIGNMENT OF THE VALVE BOX SHALL BE THE CONTRACTOR'S RESPONSIBILITY AND CARE SHALL BE TAKEN TO ENSURE THAT THE VALVE IS OPERABLE.
4. VALVE BOX EARS SHALL BE PLACED IN LINE WITH THE PIPE IT SERVES.

VALVE BOX ADJUSTMENT

Sallal Water Association
STANDARD DETAILS

W6

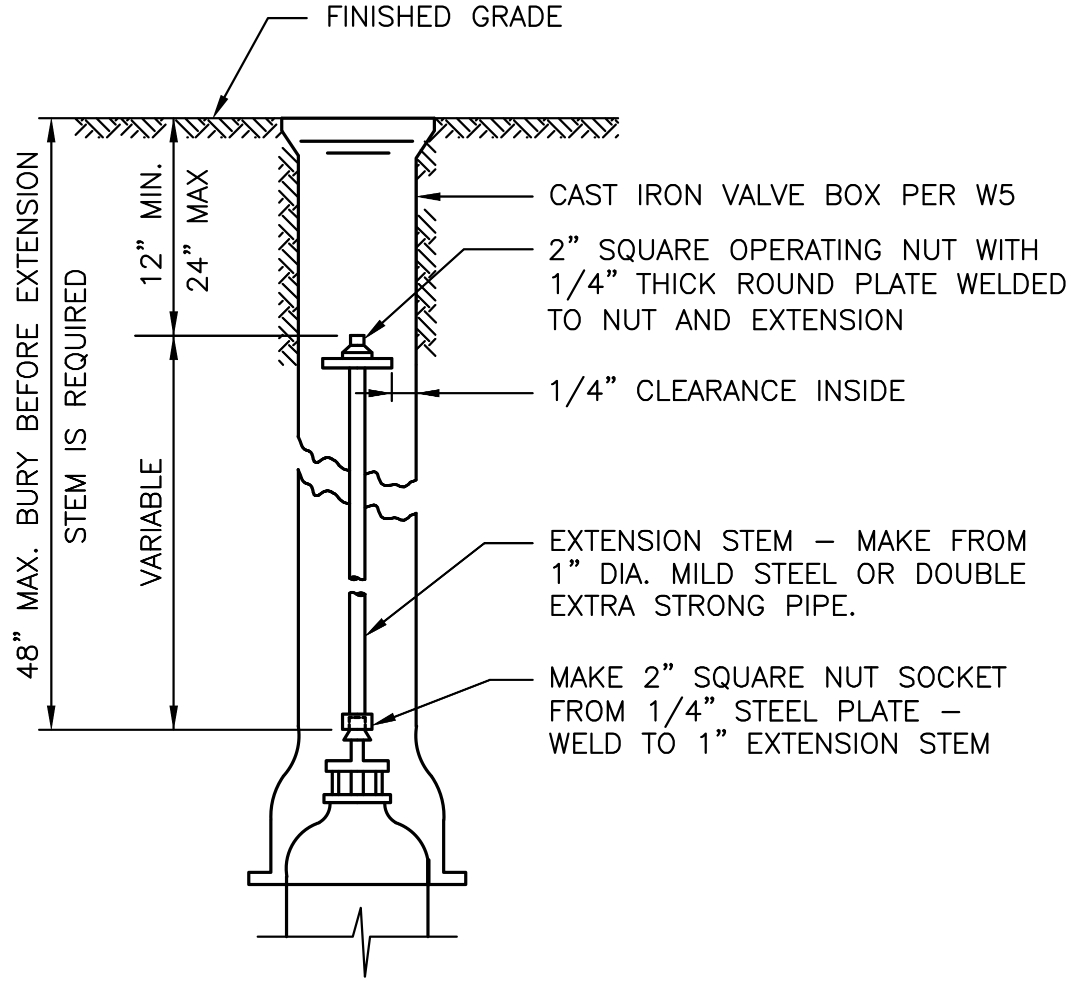

NOTE:

SEE DETAIL W–5 FOR SURFACE RESTORATION.

VALVE EXTENSION STEM

Sallal Water Association
STANDARD DETAILS

W7

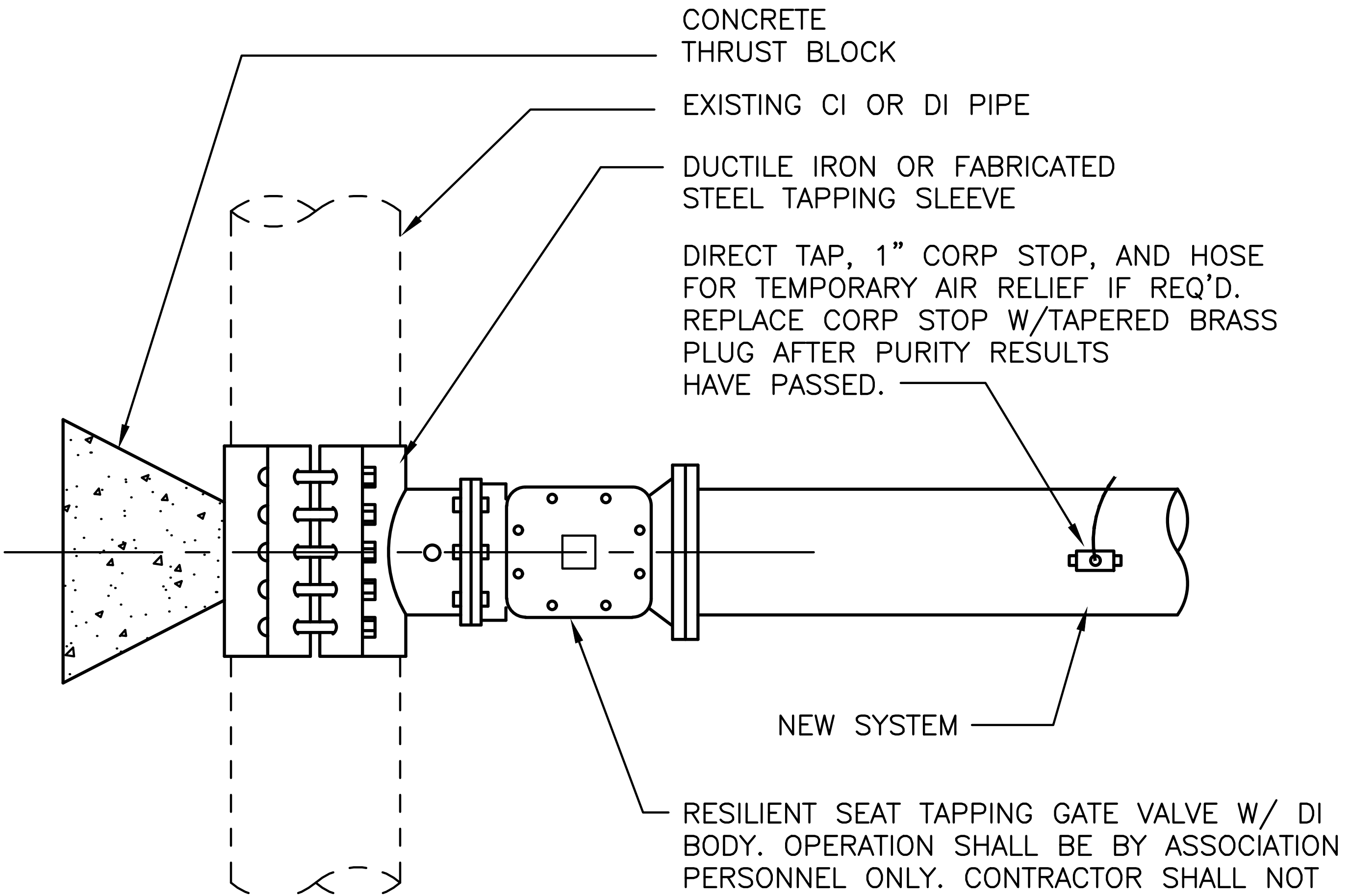

NOTES:

1. TAP TO BE INSTALLED AT DEVELOPERS EXPENSE UNDER ASSOCIATION OBSERVATION.
2. SIZE–ON–SIZE TAPPING TEES SHALL BE DUCTILE IRON MECHANICAL SLEEVE AND ON DUCTILE IRON PIPE ONLY.
3. CONNECTIONS NOT ALLOWED ON FRIDAYS, HOLIDAYS, DAY BEFORE HOLIDAYS, OR WEEKENDS.

WET TAP CONNECTION

Sallal Water Association
STANDARD DETAILS

W8

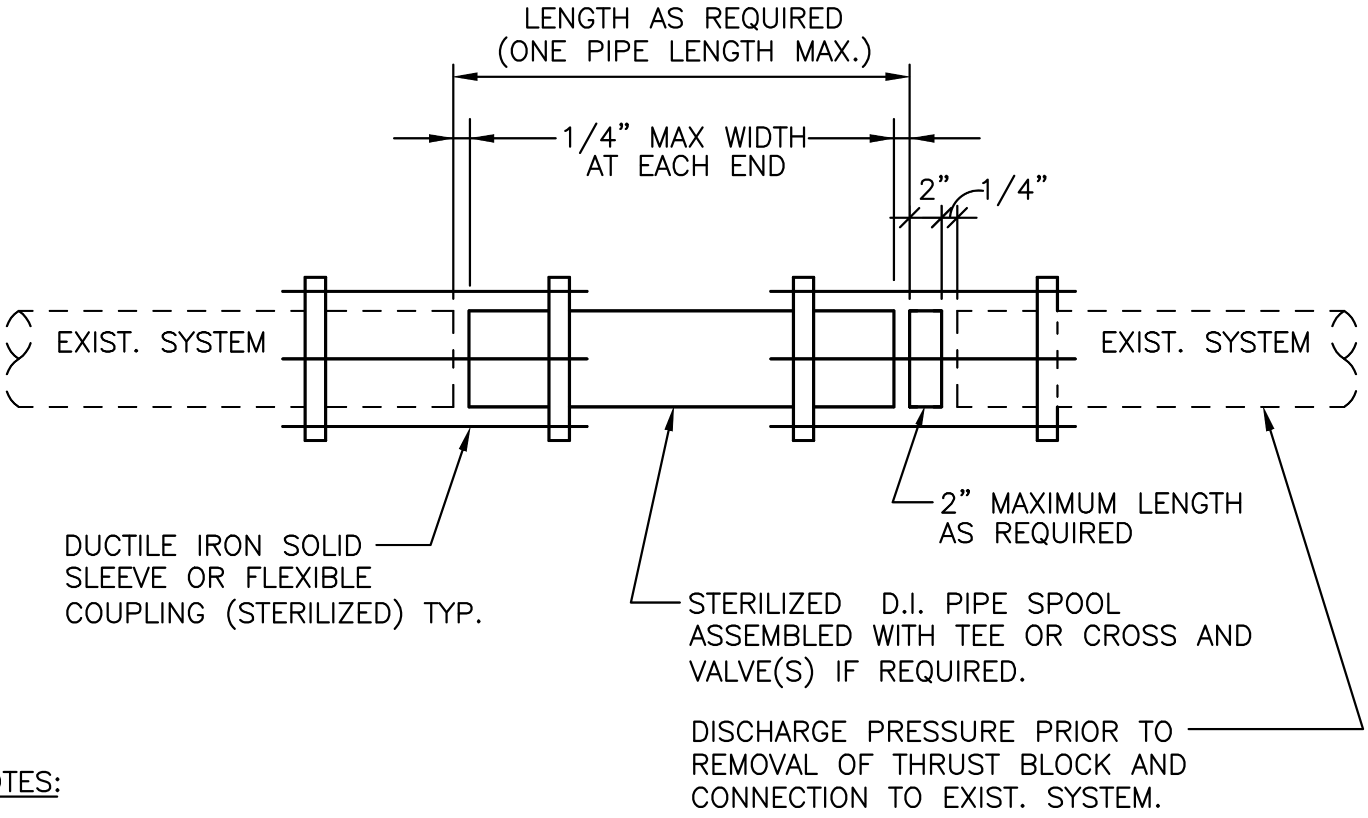

NOTES:

1. IN-LINE VALVE(S) IN EXISTING SYSTEM MAY BE REQUIRED BY THE ASSOCIATION AT NEW INTERTIE LOCATIONS. VALVE(S) ARE NOT SHOWN ABOVE FOR CLARITY.
2. SINGLE SLEEVE (WITH SPACER) MAY BE USED LIMITED TO MAXIMUM SPACER WIDTH OF 2-INCH.
3. CONNECTIONS NOT ALLOWED ON FRIDAYS, HOLIDAYS, DAY BEFORE HOLIDAYS, OR WEEKENDS.

CUT IN CONNECTION

Sallal Water Association
STANDARD DETAILS

ATTACHMENT A

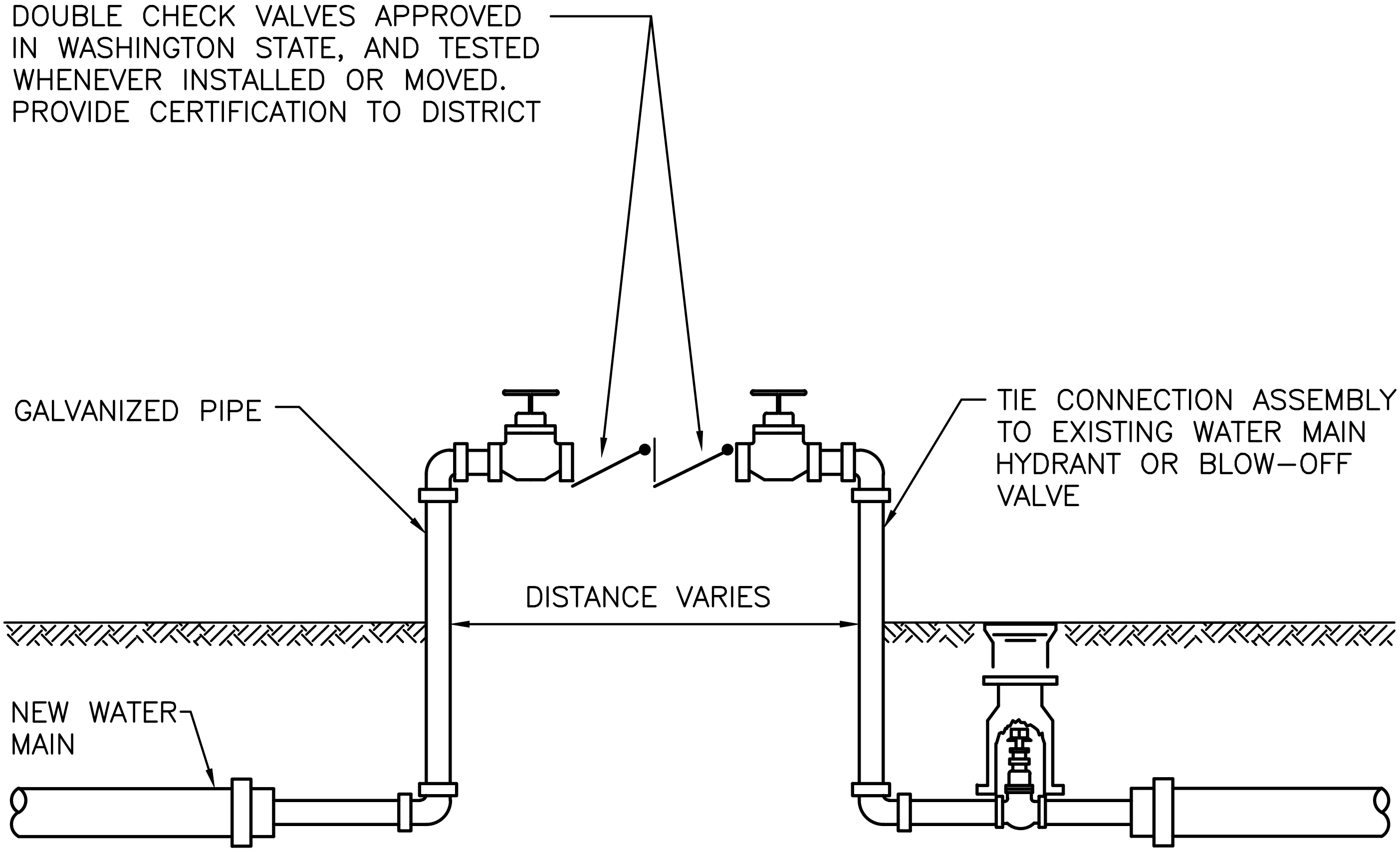

NOTES:

1. PROTECT INSTALLATION FROM DAMAGE AND FREEZING.
2. ALL WATER USED FOR FILLING AND FLUSHING SHALL BE METERED BY ASSOCIATION. PROVIDE SPACE FOR INSTALLATION OF METER, OR INSTALL ON POINT OF DISCHARGE.
3. ALL NEW MAINS SHALL BE KEPT SEPARATE FROM THE ASSOCIATION'S EXISTING SYSTEM UNTIL THE NEW MAINS ARE TESTED AND ACCEPTED. FINAL CONNECTION REQUIRES 100% INSPECTION BY THE ASSOCIATION.
4. DOUBLE CHECK VALVES SHALL BE 4-IN MINIMUM DIAMETER. 12-INCH WATER MAIN DOUBLE CHECK VALVES SHALL BE 6-IN DIAMETER.

TESTING CONNECTION DETAIL

Sallal Water Association
STANDARD DETAILS

W10

ATTACHMENT A

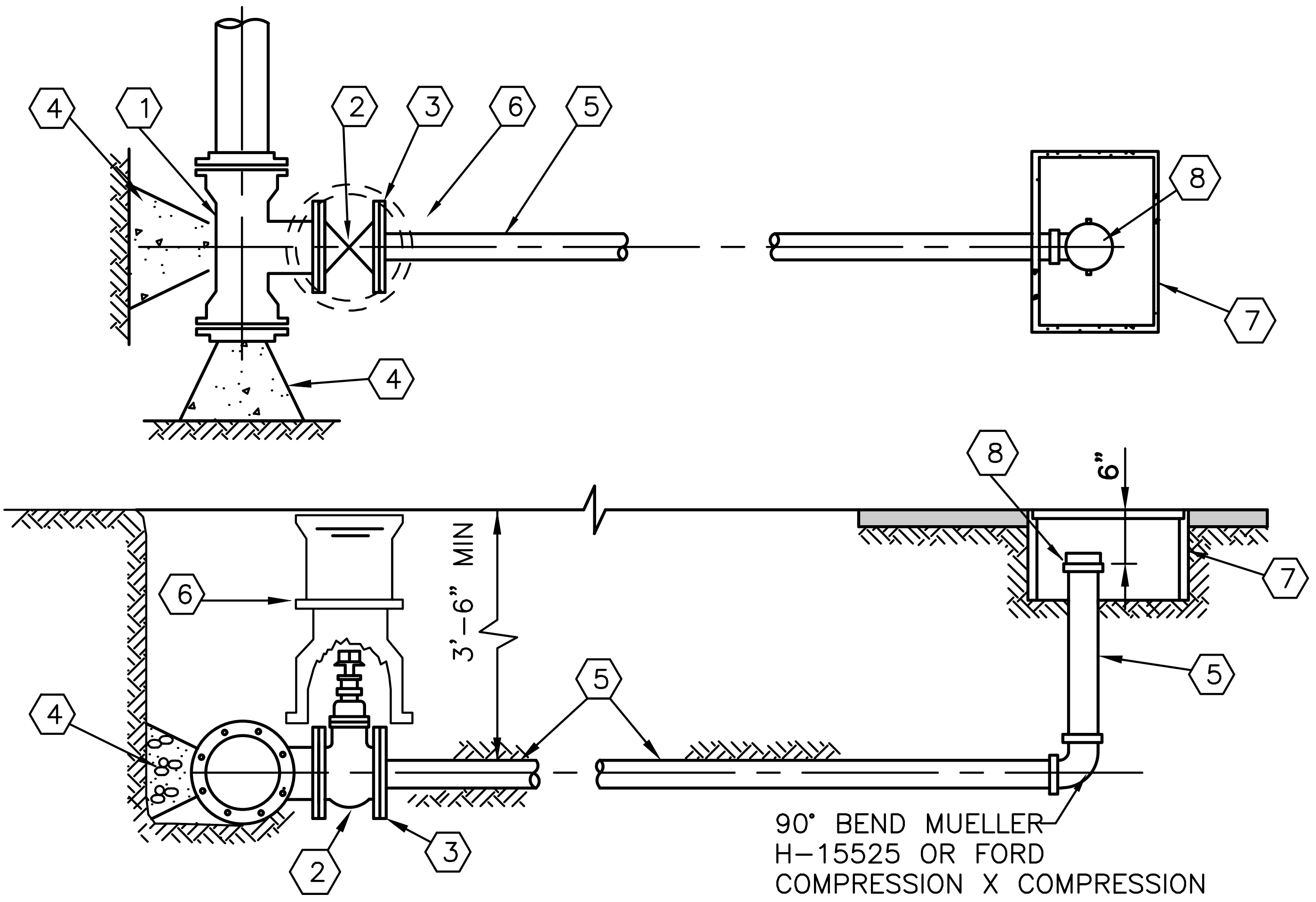

1. MJ X MJ X 4" FL D.I. TEE.
2. 4" AWWA RESILIENT SEAT GATE VALVE, FL X FL, WITH OPERATING NUT.
3. 4" BLIND FLANGE, TAPPED FOR 2" FOR 6" AND 8" MAINS. MAINS LARGER THAN 8" SHALL END IN A FIRE HYDRANT.
4. CONCRETE THRUST BLOCK.
5. 2" POLYETHYLENE (200 PSI).
6. CAST IRON VALVE BOX PER V-W5
7. CARSON # 1324 METER BOX. BOX SHALL BE H-20 LOAD RATED. (FIELD LOCATION TO BE IN PAVED SURFACE UNLESS ASSOCIATION APPROVES ALTERNATE LOCATION.)
8. 2-INCH IPS THREAD AND THREADED CAP.

NOTES:

1. INSTALL DIELECTRIC COMPOUNDS FOR SEPARATION AT DISSIMILAR METALS.

2" - BLOWOFF ASSEMBLY

Sallal Water Association
STANDARD DETAILS

W11

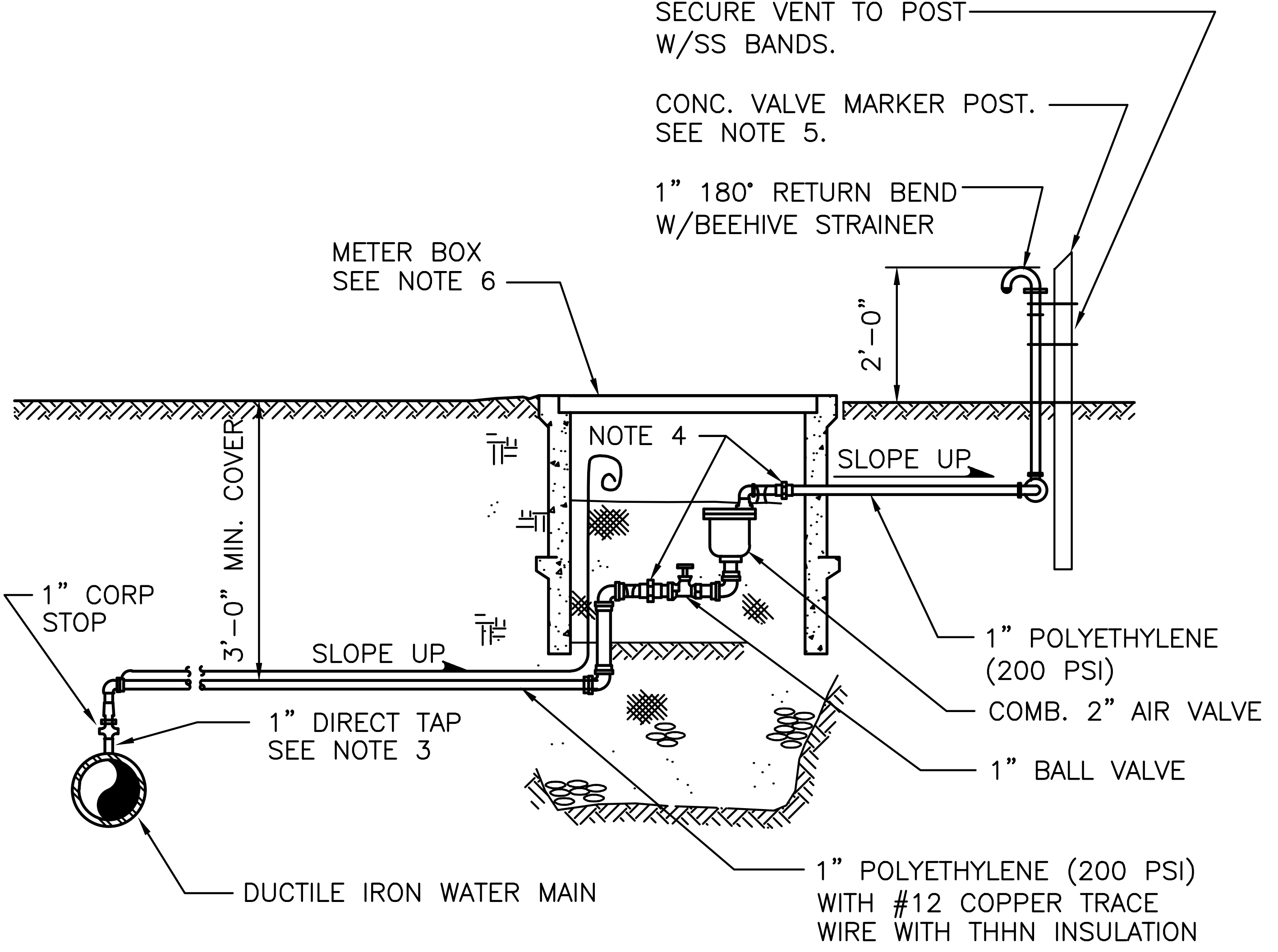

NOTES:

1. USE OF 1" COMBINATION AIR VALVE REQUIRES ASSOCIATION APPROVAL, 2" COMBINATION AIR STANDARD.
2. ALL PIPING AND FITTINGS BETWEEN CORP AND INLET SIDE OF COMBINATION AIR AND VACUUM ASSEMBLY SHALL BE COPPER OR BRASS, EXCEPT AS NOTED ABOVE ON DRAWING.
3. TAP WATER MAIN AT HIGH POINT AT LOCATION DESIGNATED BY THE ASSOCIATION.
4. AIR VALVE ASSEMBLY TO BE CONNECTED USING HORIZONTALLY PLACED UNIONS AT EACH END OF AIR VAC ASSEMBLY (MATCH PIPE MATERIAL OR COMPRESSION FITTINGS).
5. PAINT EXPOSED PORTION OF VENT PIPE AND MARKER POST WITH 2 COATS KELLY-MOORE 6100-516 YELLOW.
6. FOGTITE NO. 2 CONCRETE METER BOX. BOX AND LID SHALL BE H-20 LOAD RATED.
7. FIELD LOCATION TO BE CONFIRMED WITH ASSOCIATION.

1" AIR AND VACUUM RELEASE ASSEMBLY

Sallal Water Association
STANDARD DETAILS

W12

NOTE: AIR AND VACUUM RELEASE ASSEMBLY SHALL BE INSTALLED IN NON-TRAFFIC AREA.

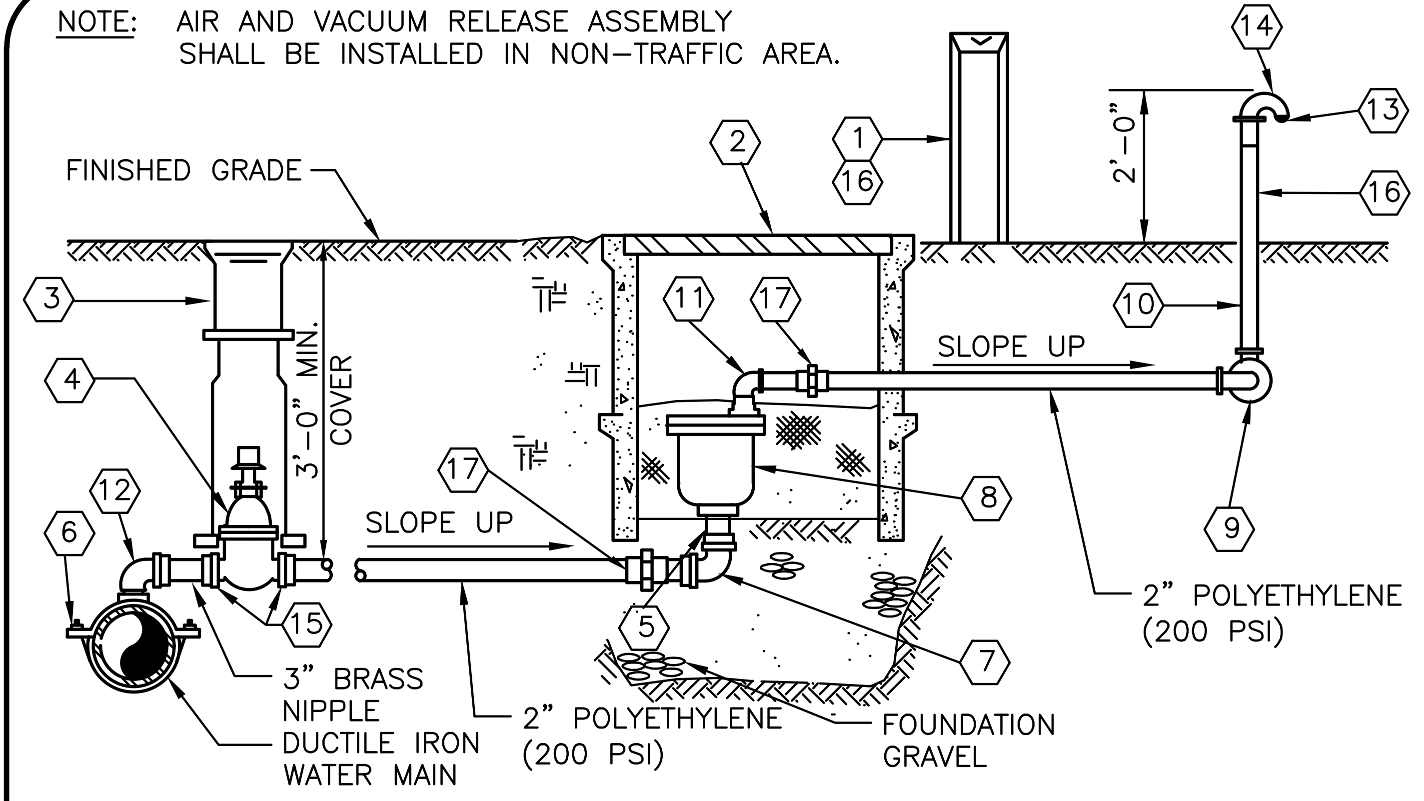

1 CONC. VALVE MARKER POST.

2 FOGTITE NO. 2 CONCRETE METER BOX. BOX AND LID SHALL BE H-20 LOAD RATED.

3 CAST IRON VALVE BOX PER W5

4 2" AWWA RESILIENT SEAT GATE VALVE THD X THD, WITH OPERATING NUT

5 2" TYPE "K" COPPER TUBING

6 DOUBLE STRAP SERVICE CLAMP

7 90° BEND MUELLER No. H-15526 COMPRESSION X COMPRESSION

8 2" COMBINATION AIR & VALVE ASSEMBLY; A. APCO MODEL 145C.
B. CRISPIN MODEL UL 20 SERIES.
C. VALMATIC

9 2, 2"X90° ELL, GALV.

10 2" GALV. IRON PIPE (FIELD LOCATE NEXT TO EXISTING PROPERTY LINE).

11 2"X90° ELL (GALV.)

12 90° BEND MUELLER No. H-10096 FEMALE X M.I.P.

13 2" BEEHIVE STRAINER

14 2" OPEN PATTERN RETURN BEND

15 STRAIGHT COUPLING, MUELLER No. H-15428 COMPRESSION TO M.I.P.

16 PAINT PORTION ABOVE GROUND WITH TWO COATS OF KELLY MOORE 6100-516 YELLOW.

17 UNIONS AND COMPRESSION FITTINGS

NOTES:

1. ALL PIPING AND FITTINGS BETWEEN DOUBLE STRAP SADDLE AND INLET SIDE OF COMBINATION AIR AND VACUUM ASSEMBLY SHALL BE COPPER OR BRASS, EXCEPT AS NOTED ABOVE ON DRAWING.
2. TAP WATER MAIN AT HIGH POINT AT LOCATION TO BE DETERMINED BY THE ASSOCIATION.
3. AIR VAC ASSEMBLY TO BE CONNECTED USING HORIZONTALLY PLACED UNIONS AT EACH END OF AIR VAC ASSEMBLY (MATCH PIPE MATERIAL OR COMPRESSION FITTINGS)

2" AIR AND VACUUM RELEASE ASSEMBLY

Sallal Water Association
STANDARD DETAILS

W13

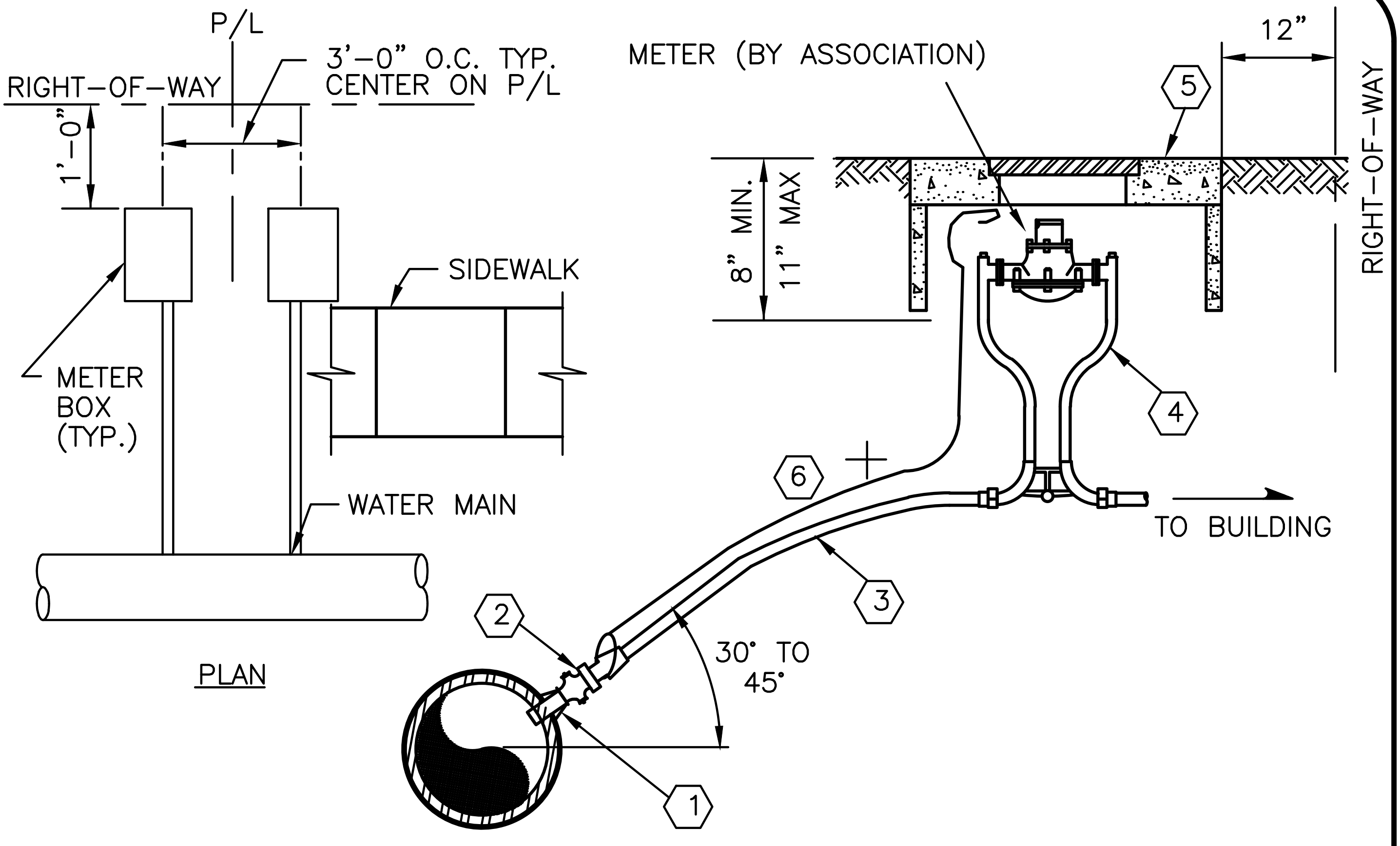

1 DOUBLE STRAP STAINLESS STEEL SADDLE

2 1" BALL TYPE CORPORATION STOP MUELLER B-25008, FORD FB1000-Q4, A.Y. McDONALD 4701BQ.

3 1" POLY LINE (200 PSI) - LENGTH AS REQUIRED. INSTALL INSIDE 2-INCH PVC UNDER ROADWAY (NO SPLICES).

4 METER SETTER. - FORD 70 SERIES (1-INCH) WITH ANGLE BALL VALVE AND CHECK VALVE, 12-INCH HEIGHT. CONFIRM WITH ASSOCIATION FOR REQUIRED FITTINGS.

5 CARSON METER BOX, # 1324 WITH MAX VIEW DI LID. BOX AND LID SHALL BE H-20 LOAD RATED.

6 No. 12 COPPER TRACE WIRE WITH THHN BLUE PLASTIC INSULATION. LENGTH SUFFICIENT TO EXTEND 1-FOOT ABOVE GROUND.

NOTES:

1. NO SPLICES ALLOWED.
2. SERVICE FROM METER BOX TO HOUSE BY PROPERTY OWNER.
3. INDIVIDUAL SERVICE REQUIRED FOR EACH STRUCTURE OR LOT.
4. METER TO BE INSTALLED BY THE ASSOCIATION AT OWNER'S EXPENSE.
5. 5-FT ESMT PROVIDED TO ASSOCIATION AROUND METERS AND SERVICE LINES LOCATED OUTSIDE R/W.
6. ALL SERVICES EXCEPT SINGLE FAMILY RESIDENTIAL TO HAVE STATE APPROVED BACKFLOW PREVENTION DEVICE. CONFIRM INSTALLATION WITH ASSOCIATION. INITIAL AND ANNUAL TESTING REQUIRED.

1" AND SMALLER WATER SERVICE

Sallal Water Association

STANDARD DETAILS

W14

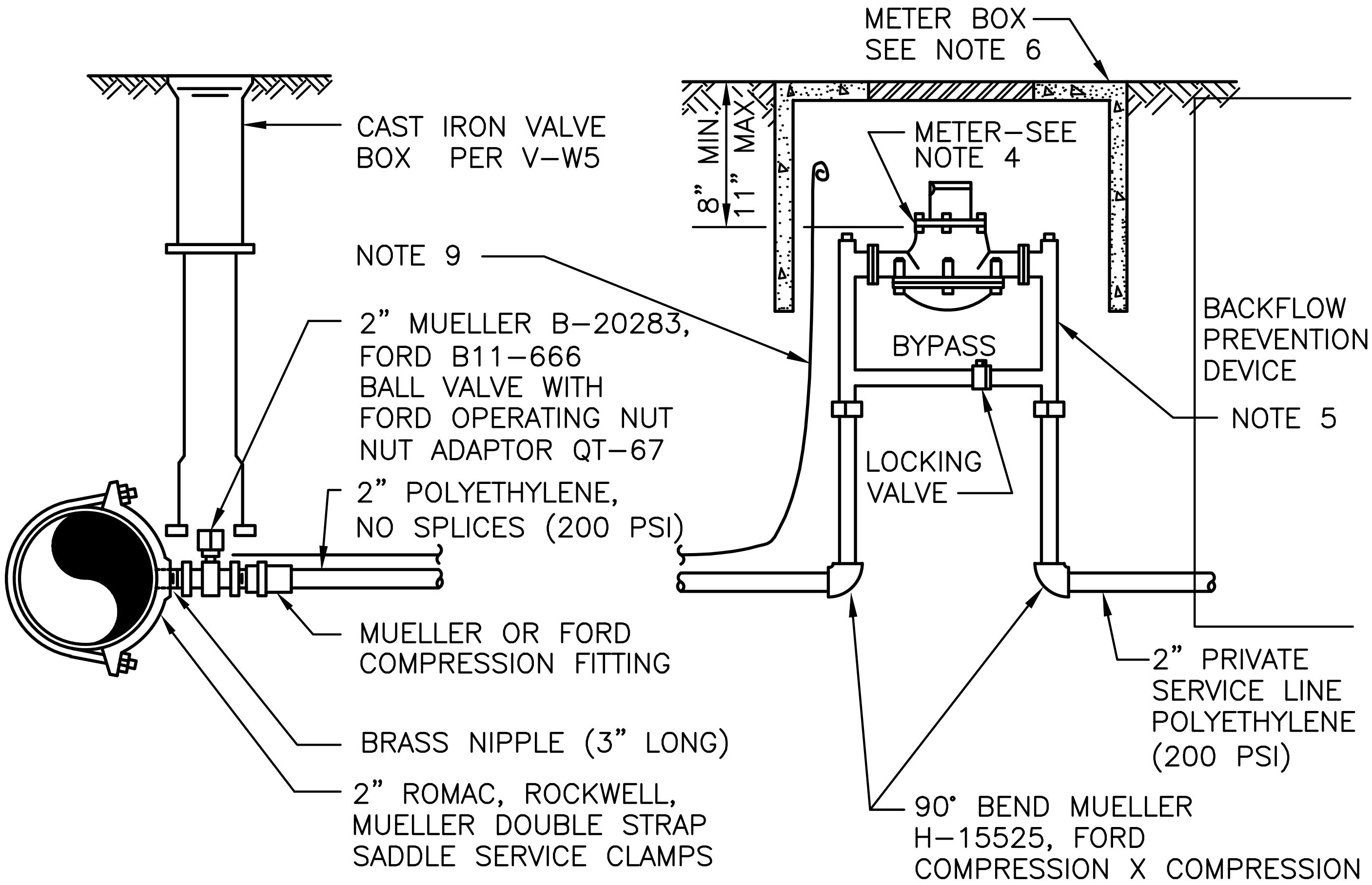

NOTES:

1. NO SPLICES ALLOWED UNDER EXISTING OR PROPOSED ASPHALT PAVEMENT.
2. SERVICE FROM METER BOX TO STRUCTURE BY PROPERTY OWNER.
3. INDIVIDUAL SERVICES REQUIRED FOR EACH STRUCTURE.
4. METER BY ASSOCIATION.
5. METER SETTER, FORD 70 SERIES WITH ANGLE BALL VALVE AND CHECK VALVE.
6. FOGTITE CONCRETE NO. 2 METER BOX WITH MAX VIEW DI LID. BOX AND LID SHALL BE H–20 LOAD RATED.
7. 5–FT ESMT PROVIDED TO ASSOCIATION AROUND METERS LOCATED OUTSIDE R/W.
8. ALL SERVICES SHALL HAVE WASHINGTON STATE APPROVED RPBA FOR BACKFLOW PREVENTION. CONFIRM LOCATION OF ASSEMBLY WITH DISTRICT. INITIAL AND ANNUAL TESTING REQUIRED. MULTIFAMILY ALLOWED TO USE DCVA ASSEMBLY IN LIEU OF RPBA.
9. No. 12 COPPER TRACE WIRE WITH THHN BLUE PLASTIC INSULATION. LENGTH SUFFICIENT TO EXTEND 1–FOOT ABOVE GROUND.

2" WATER SERVICE

Sallal Water Association
STANDARD DETAILS

W15

ATTACHMENT A

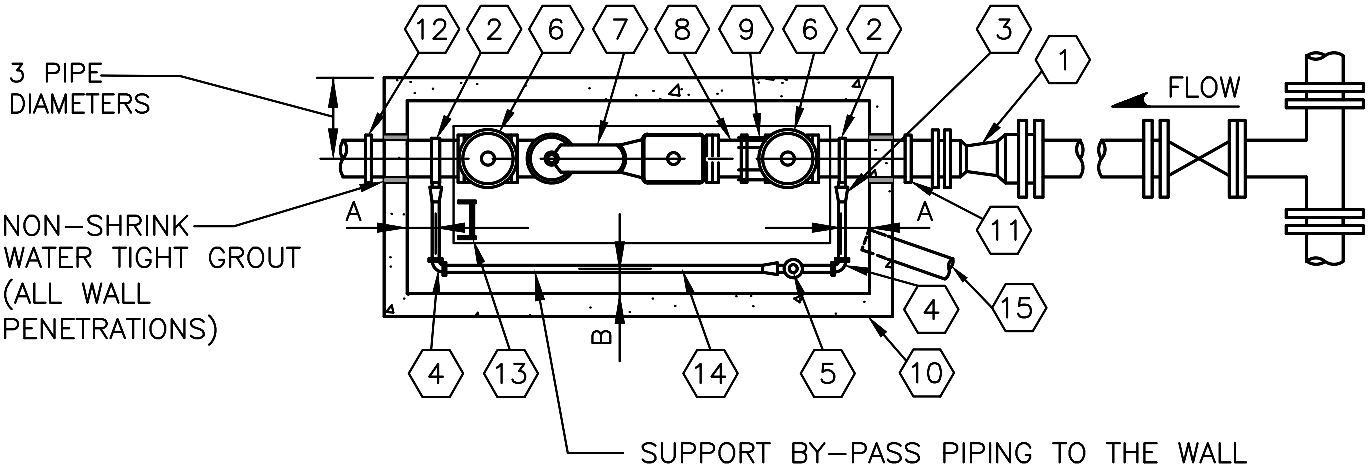

PLAN

1. 4"x3" REDUCER, M.J. FOR 3" METER
2. SINGLE STRAP SERVICE CLAMP, ROMAC 101 WITH IPS TAP, OR EQUAL (1 1/2" OR 2" BYPASS, 4-INCH BYPASS REQUIRES D.I. TEE).
3. FITTINGS AS REQUIRED.
4. BEND CPLG COPPER TO COPPER OR DI TO DI.
5. BALL VALVE WITH PADLOCK WING OR LOCK CAP, FORD B21-444W OR B21-666 WITH LOCK CAP OR B21-777 WITH LOCK CAP. SIZED TO LINE.
6. RESILIENT SEAT GATE VALVE, FL X FL SIZED TO METER.
7. METER BY ASSOCIATION AND INSTALLED BY CONTRACTOR.
8. D.I. PIPE SPOOL FL X PE LENGTH TO FIT.
9. RESTRAINED FLANGE COUPLING ADAPTOR.
10. PRECAST CONCRETE VAULT, UTILITY VAULT OR EQUAL, SEE DETAIL V-W16B FOR SIZING AND REQUIREMENTS.
11. MEGA-LUG FOLLOWER INSTALLED ON INFLOW SIDE OF VAULT WITH CONCRETE THRUST BLOCK OR SHACKLE TO THRUST BLOCK TO PREVENT MOVEMENT IF METER IS REMOVED. (BLOCK NOT SHOWN)
12. DIELECTRIC CPLG. TO BUILDING SERVICE. SIZE AS REQUIRED.
13. GALV. STEEL OR ALUMINUM LADDER. SECURE TO VAULT LID AND FLOOR. COORDINATE LOCATION FOR ACCESS. SEE NOTE 7, DETAIL W16B.
14. BY-PASS (SIZE BY TABLE BELOW).
15. 4" PVC TO CATCH BASIN OR DAYLIGHT. WHERE GRAVITY DRAIN IS NOT FEASIBLE, PROVIDE HYDRAULIC OR ELECTRIC SUMP WITH DISCHARGE TO SURFACE DRAIN WITH CHECK VALVE ON DISCHARGE LINE.

METER SIZE	MAIN-LINE	BYPASS	A	B
3"	4" DI.	1 1/2" COPPER	9"	4"
4"	4" DI.	1 1/2" COPPER	9"	4"
6"	6" DI.	2" COPPER	9"	4"
8"	8" DI.	4" DI.	14"	6"
10"	10" DI.	4" DI.	16"	6"

NOTES:

1. SEE V-W16B FOR ELEVATION AND NOTES.

W16A

METER VAULT ASSEMBLY
3" THROUGH 10"

Sallal Water Association

STANDARD DETAILS

3" FROM TOP OF VAULT TO FINISHED GRADE IN PLANTED AREAS

LOCKING ACCESS HATCH(ES) LW PRODUCTS OR EQUAL. SEE NOTE 3.

PRECAST CONCRETE VAULT (SEE TABLE)

SIMPLEX DEDICATED RECEPTACLE IN A CAST ALUMINUM BOX WITH IN-SERVICE COVER. RECEPTACLE SHALL BE ORANGE. INCLUDE SIGN STATING "DEDICATED 120V, 1PH, FOR SUMP PUMP".

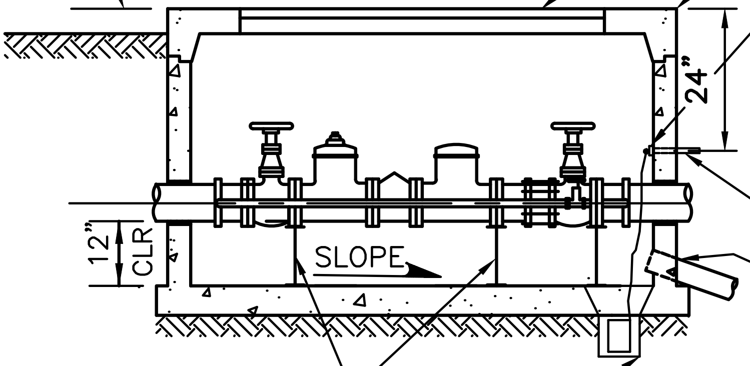

ELECTRICAL SERVICE FOR SUMP (IF REQUIRED) SEE NOTE 5

4" PVC TO CATCH BASIN OR DAYLIGHT. WHERE GRAVITY DRAIN IS NOT FEASIBLE, PROVIDE HYDRAULIC OR ELECTRIC SUMP WITH DISCHARGE TO SURFACE DRAIN WITH CHECK VALVE ON DISCHARGE LINE.

STANDON S-89 OR EQUAL ADJUSTABLE PIPE SUPPORTS

SUMP IF REQUIRED

ELEVATION

SEE DETAIL V-W12A FOR CALLOUTS

METER SIZE	MAIN-LINE	MINIMUM I/S VAULT DIM. L x W x H			UTILITY VAULT CO APPROVED MODEL	MIN. HATCH OPENING
3"	4" DI.	8'-4"	4'-4"	3'-4"	4484-LA	3' x 6'
4"	4" DI.	8'-4"	4'-4"	3'-4"	4484-LA	3' x 6'
6"	6" DI.	10'-6"	5'-0"	6'-2"	5106-LA	3' x 6'
8"	8" DI.	12'-0"	6'-0"	6'-6"	612-LA	3' x 6'
10"	10" DI.	14'-0"	8'-0"	6'-6"	814-LA	3' x 6'

NOTES:

1. WASHINGTON STATE APPROVED (DCDA MINIMUM) BACKFLOW PREVENTOR REQUIRED IN SEPARATE VAULT FOR ALL LINES. CONFIRM INSTALLATION WITH ASSOCIATION. INITIAL AND ANNUAL TEST REQUIRED.
2. METER SHALL BE INSTALLED SUCH THAT IT CAN BE READ WITHOUT ENTERING VAULT WITH ACCESS HATCH OPEN.
3. COORDINATE ORIENTATION OF HATCH(ES) TO PROVIDE CLEAR VERTICAL ACCESS TO METER ASSEMBLY, AND WITH LADDER LOCATION. VERIFY WITH ASSOCIATION.
4. DRAIN HATCH(ES) TO VAULT FLOOR WITH PVC PIPE AND FITTINGS.
5. 3/4" PVC SCH-40, CONDUIT SHALL BE COMPLETELY SEALED 120V, UNDER GROUND. CONTRACTOR TO SEAL CONDUIT PENETRATION WITH NON-SHRINK GROUT.
6. ESMT TO BE PROVIDED TO ASSOCIATION AROUND METERS LOCATED OUTSIDE R/W.
7. SEE W16A FOR PLAN AND NOTES.

METER VAULT ASSEMBLY
3" THROUGH 10"

Sallal Water Association
STANDARD DETAILS

W16B

ATTACHMENT A

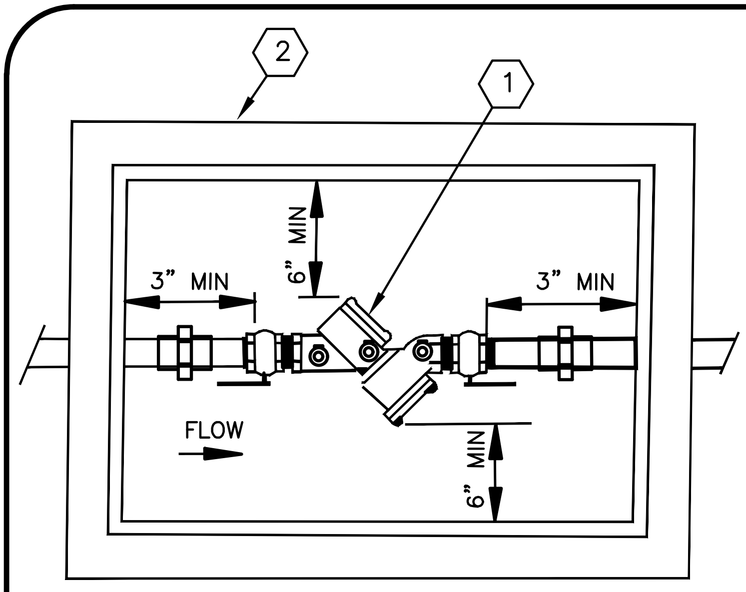

PLAN

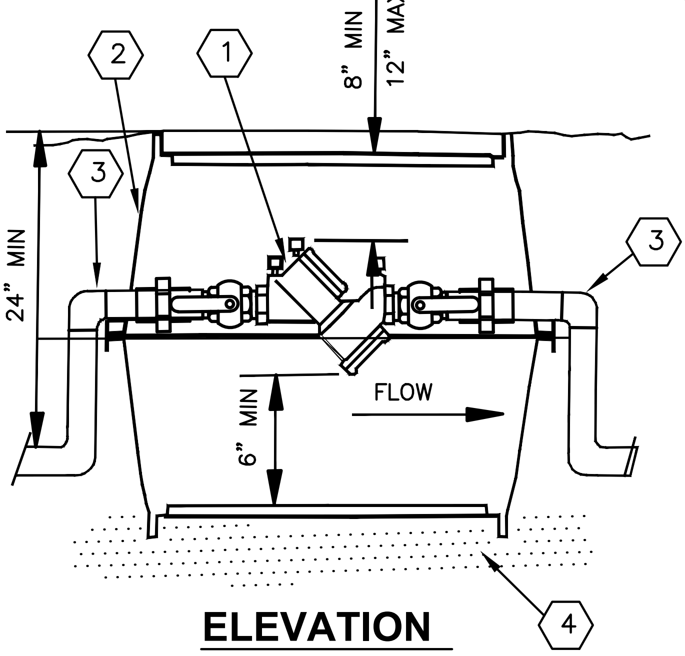

ELEVATION

1. WASHINGTON STATE APPROVED DOUBLE CHECK VALVE ASSEMBLY (DCVA)
2. METER BOX FOGTITE NO. 2 CONCRETE AND DI LID. BOX AND LID SHALL BE H-20 LOAD RATED.
3. BENDS MAY BE LOCATED INSIDE OR OUTSIDE OF BOX SO LONG AS SUFFICIENT ROOM IS ALLOWED AT EACH END FOR VALVE OPERATION AND DCVA REPAIR OR MAINTENANCE.
4. PROVIDE FREE DRAINING BACKFILL BELOW BOX. (12" WASHED GRAVEL).

NOTES:

1. ALL TEST COCKS SHALL POINT UPWARDS AND HAVE BRASS PLUGS.
2. DCVA SHALL BE CENTERED IN BOX (PLAN).
3. COMPLETE ALL WORK IN ACCORDANCE WITH STATE, ASSOCIATION, AND MANUFACTURER.
4. SYSTEM SHALL NOT BE PUT INTO SERVICE UNTIL DCVA IS APPROVED BY THE ASSOCIATION AND TESTED/CERTIFIED BY A WASHINGTON STATE LICENSED TESTER.
5. DCVA IS CONSIDERED PART OF A PRIVATE SYSTEM AND SHALL BE MAINTAINED BY THE PROPERTY OWNER WITH ANNUAL CERTIFICATION REQUIRED.
6. INSTALL DCVA USING UNIONS ON EACH END OF ASSEMBLY. UNIONS TO BE EXPOSED INSIDE OF BOX.
7. BOTTOM OF BOX TO BE OPEN TO DRAIN.
8. NO BRANCH CONNECTIONS ALLOWED BETWEEN METER AND DCVA.
9. ISOLATION VALVES SHALL BE LOCATED OUTSIDE VAULT TO ALLOW FOR REMOVAL OF CHECK VALVE. PIPE RESTRAINT AS REQUIRED TO PREVENT PIPE MOVEMENT.

DOUBLE CHECK VALVE ASSEMBLY 2" & SMALLER

Sallal Water Association
STANDARD DETAILS

W17

M:\SALLAL\STANDARDS\W17 - DOUBLE CHECK ASSEMBLY 2-INCH AND SMALLER.DWG

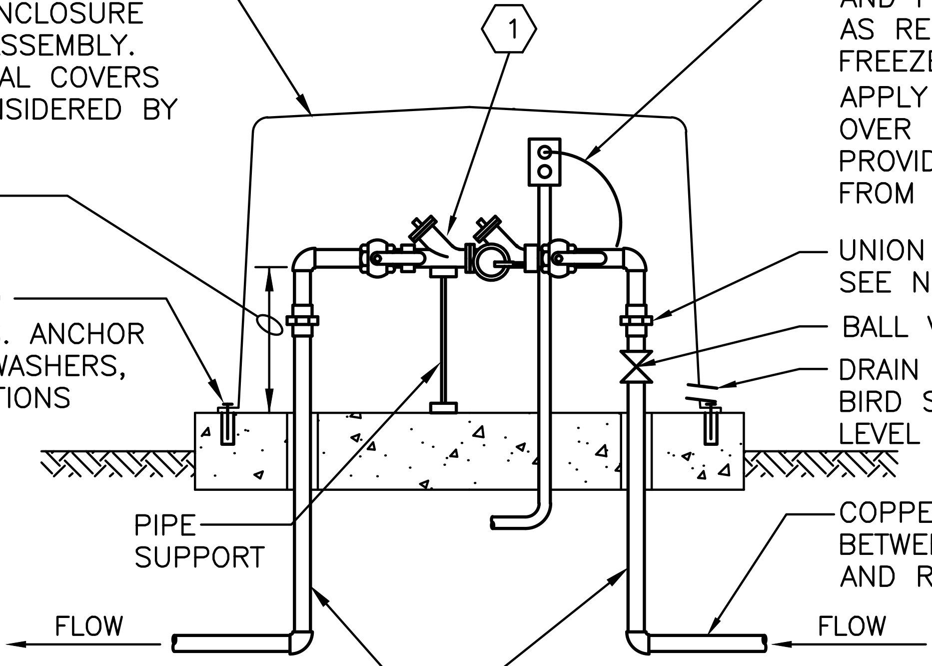

"HOT BOX" HB SERIES INSULATED ENCLOSURE SIZED FOR ASSEMBLY. ARCHITECTURAL COVERS WILL BE CONSIDERED BY ASSOCIATION.

12" MIN.

BOLT TO PAD W/ 3/8" S.S. ANCHOR BOLTS AND WASHERS, MIN. 4 LOCATIONS

PIPE SUPPORT

PROVIDE HEAT TAPE AND PIPE INSULATION AS REQUIRED FOR FREEZE PROTECTION. APPLY 2" FIBERGLASS OVER HEAT TAPE. PROVIDE ELECTRICAL FROM SERVED FACILITY.

UNION (TYP. OF 2) SEE NOTE 6

BALL VALVE

DRAIN TO DAYLIGHT W/ BIRD SCREEN AT SLAB LEVEL

COPPER PIPE BETWEEN METER AND RPBA

COPPER PIPE FOR VERTICAL RISER WHEN PASSING THROUGH CONCRETE. WRAP PIPE TO 2-INCHES EACH SIDE OF CONCRETE WITH DUCT TAPE PRIOR TO POURING CONCRETE BASE.

⟨1⟩ WASHINGTON STATE APPROVED REDUCED PRESSURE BACKFLOW ASSEMBLY (RPBA) WITH TEST COCK PROTECTION AND BRONZE BODY BALL VALVE AT EACH END.

NOTES:

1. CONCRETE TO BE 2500 PSI MIX WITH AIR ENTRAINMENT.
2. COMPLETE ALL WORK IN ACCORDANCE WITH STATE, ASSOCIATION, AND MANUFACTURER STANDARDS.
3. SYSTEM SHALL NOT BE PUT INTO SERVICE UNTIL RPBA IS APPROVED BY THE ASSOCIATION AND TESTED/CERTIFIED BY A WASHINGTON STATE LICENSED TESTER.
4. RPBA IS CONSIDERED PART OF THE PRIVATE SYSTEM AND SHALL BE MAINTAINED BY THE PROPERTY OWNER WITH ANNUAL CERTIFICATION REQUIRED.
5. DIELECTRIC UNIONS SHALL BE USED TO SEPARATE DISSIMILAR MATERIALS.
6. NO BRANCH CONNECTIONS ALLOWED BETWEEN METER AND RPBA.
7. ISOLATION VALVES REQUIRED TO ISOLATE ASSEMBLY.

REDUCED PRESSURE BACKFLOW ASSEMBLY-3/4" TO 2"

Sallal Water Association
STANDARD DETAILS

W18

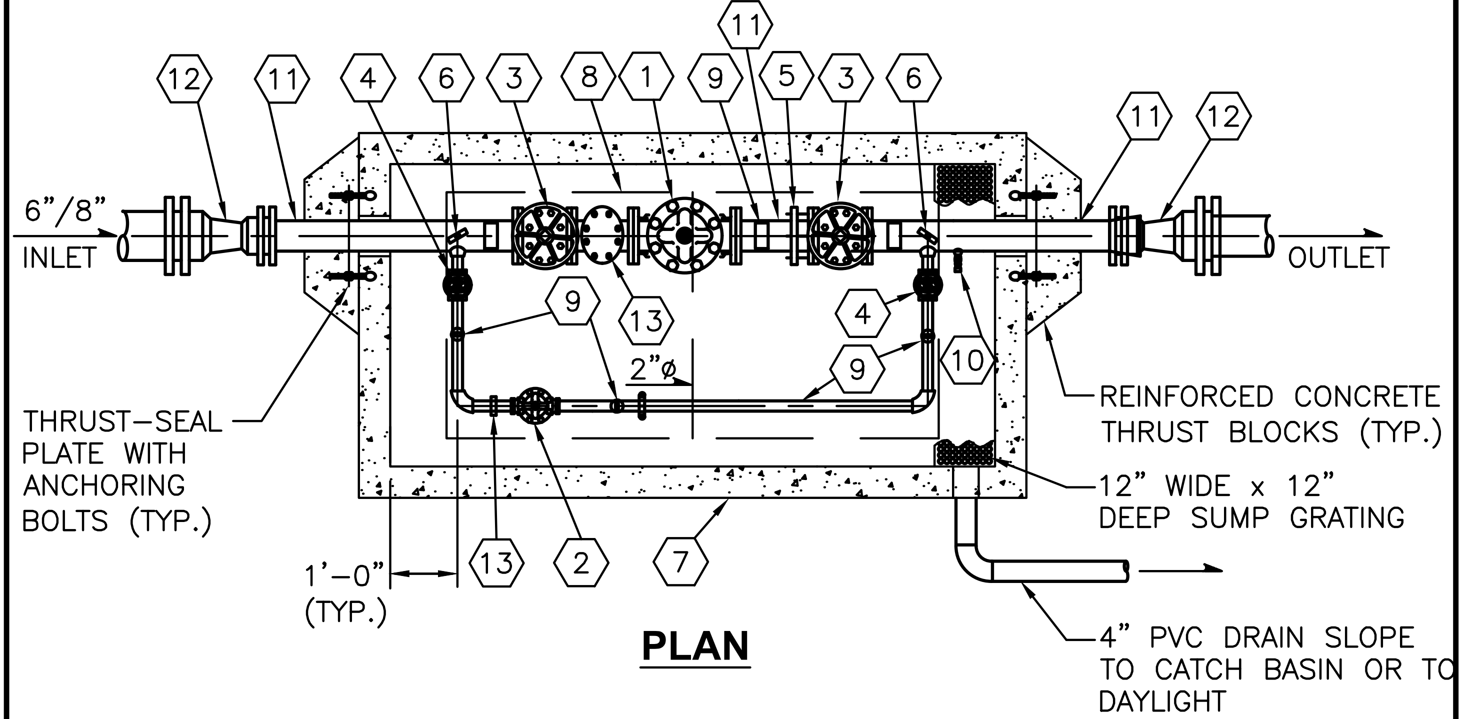

PLAN

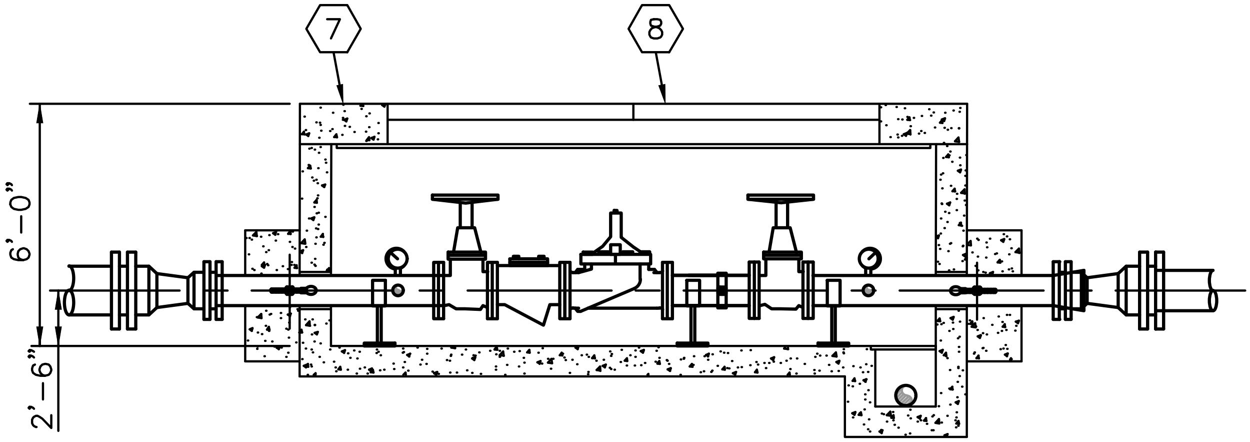

SECTION

NOTE:

ALTERNATE TO FIELD ASSEMBLED PRV AND VAULT IS SYSTEM AS MANUFACTURED BY GC SYSTEMS.

⟨X⟩ SEE V–W22B FOR CALLOUTS AND NOTES

PRESSURE REDUCING VALVE AND VAULT

Sallal Water Association

STANDARD DETAILS

W19A

ATTACHMENT A

LEGEND - SEE V-W22A FOR PLAN AND SECTION

1. 6" CLA-VAL 90G-01BCSY PRESSURE REDUCING AND PRESSURE SUSTAINING VALVE WITH X101 POSITION INDICATOR DI BODY, S.S. TRIM, #150 FL.
2. 2" CLA-VAL 90G-01BC PRESSURE REDUCING VALVE WITH X101 POSITION INDICATOR DI BODY, BRONZE TRIM – THREADED.
3. 6" D.I. RW NRS GATE VALVE WITH HANDWHEEL, #150 FL.
4. 2" MUELLER A2360-6W41 W55 RW NRS GATE VALVE WITH HANDWHEEL, THD.
5. RESTRAINED FLANGE COUPLING ADAPTOR.
6. 4" 0-300 PSI PRESSURE GAUGE WITH SNUBBER AND GAUGE COCK; TOP OF PIPE.
7. PRECAST CONCRETE VAULT 10'L x 5'W x 6'-0"H (MIN.) INSIDE, AND BLACK EXTERIOR SEALANT.
8. 48" X 96" DOUBLE DOOR ALUMINUM HATCH, LW PRODUCTS OR EQUAL. H-20 RATED. DRAIN HATCH TO VAULT FLOOR.
9. ADJUSTABLE PIPE SUPPORTS.
10. 3/4" HOSE BIB ASSEMBLY.
11. PIPE SPOOL (FLxPE) LENGTH AS REQUIRED.
12. REDUCER (AS REQUIRED), MJ WITH MEGA-LUGS.
13. WYE – STRAINER.

NOTES:

1. 6" x 2" PRV ASSEMBLY SHOWN. SIZES TO BE DETERMINED BY THE ASSOCIATION BASED ON DOWNSTREAM DEMANDS.
2. ALL 3" AND LARGER PIPE INSIDE WETTED SURFACES TO BE SANDBLASTED, EPOXY LINED AND COATED TO AWWA C210 AND NSF-61 SPECIFICATION. EXTERIOR COATING SHALL BE BLUE ENAMEL.
3. ALL PIPE 2" AND SMALLER TO BE BRASS.

PRESSURE REDUCING VALVE AND VAULT

Sallal Water Association

STANDARD DETAILS

W19B

M:\SALLAL\STANDARDS\W19B – PRV AND VAULT.DWG

ATTACHMENT A

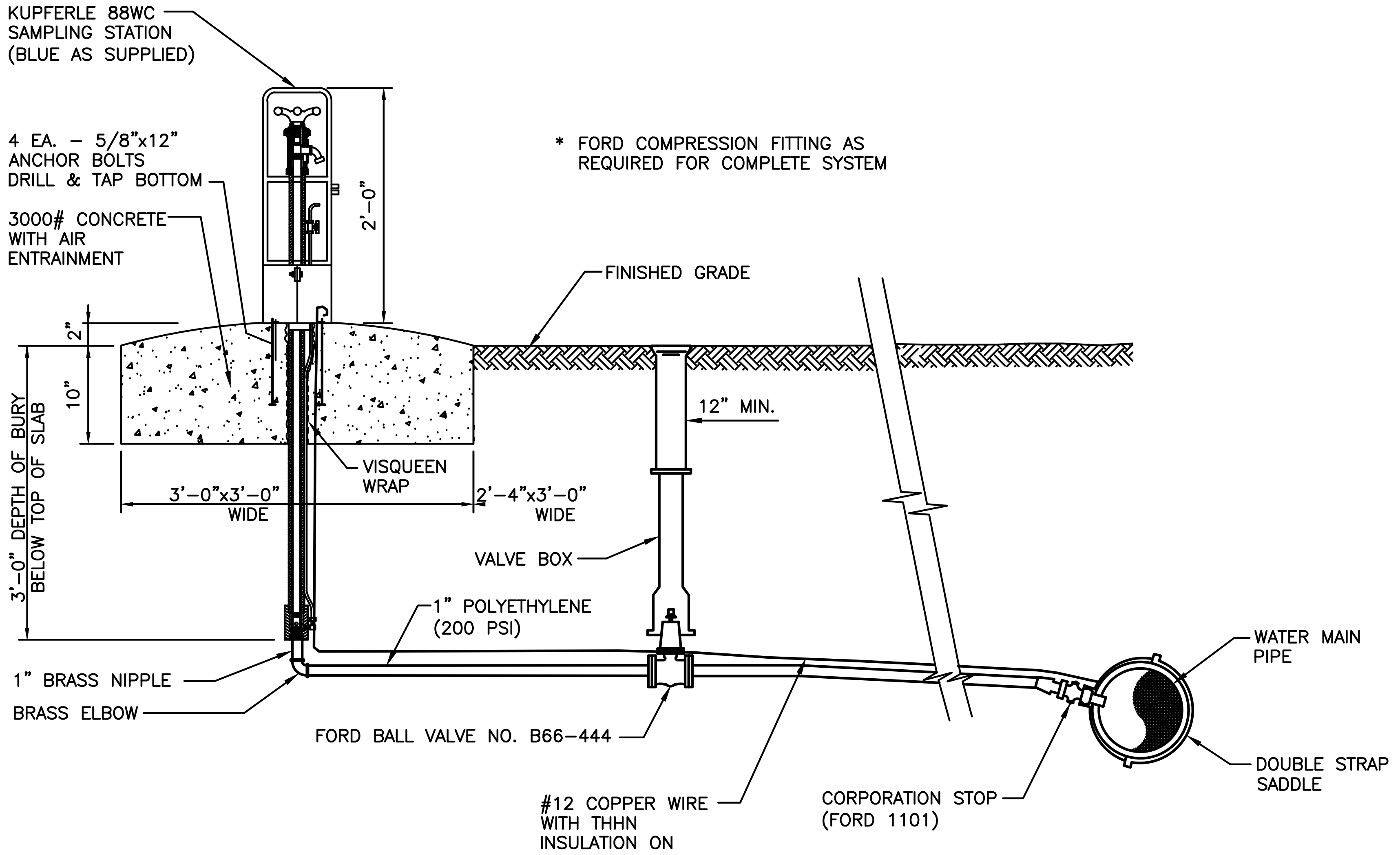

NOTES:

1. DEPTH OF BURY FOR ORDERING SAMPLER IS 36", WHICH DEPTH IS MEASURED FROM TOP OF CONCRETE SLAB.
2. INSTALL SAMPLER AND THE ASSOCIATED PIPE AND VALVES, SETTING THE BOTTOM OF THE ALUMINUM HOUSING ON THE PROPOSED CONCRETE SLAB. ANCHOR BOLTS (1/2"x10"L) ARE TO BE INSTALLED WITH WASHERS.
3. INSTALL WOOD FORMS FOR 10" SLOPED CONCRETE SLAB AND FOR WASHED ROCK. WRAP PIPE WITH VISQUEEN TO BREAK BOND WITH CONCRETE.
4. SAMPLE STATION CONNECTED DIRECTLY TO WATER MAIN WITH NO OTHER CONNECTIONS.

M:\SALLAL\STANDARDS\W-20 – SAMPL_STA.DWG

WATER SAMPLING STATION VALVE AND VAULT

Sallal Water Association
STANDARD DETAILS

W20

ATTACHMENT A

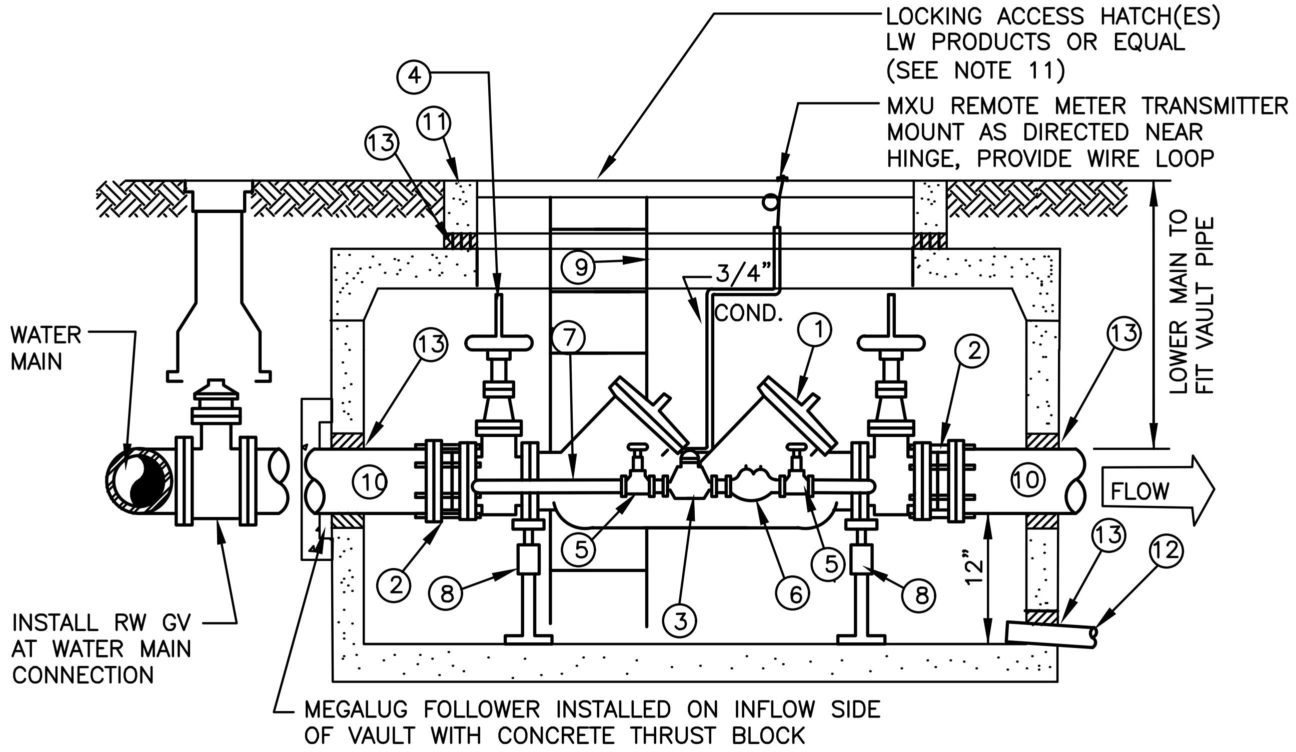

NO.	DESCRIPTION
1	STATE APPROVED DOUBLE CHECK DETECTOR ASSEMBLY (DCDA) BACKFLOW PREVENTION ASSEMBLY WITH O.S.&Y. R.W. GATE VALVE
2	ROMAC STYLE 'FCA 501' FLANGED COUPLING ADAPTER
3	5/8" x 3/4" SENSUS CUBIC FEET READING METER COMPLETE WITH SPUD NUT
4	LOCATE CENTER OF VALVE 15" FROM CENTER OF VAULT TO ALLOW STEMS TO EXTEND INTO ACCESS OPENING WHEN APPLICABLE
5	3/4" SHUTOFF VALVE; BRASS GATE VALVE
6	STATE APPROVED 3/4" DOUBLE CHECK VALVE ASSEMBLY (DCVA)
7	BRASS OR TYPE K COPPER, DETECTOR CHECK PIPING (BY PASS LINE)
8	2 EA. GALVANIZED ADJUSTABLE STANCHIONS (LOCATE AT ENDS OF DOUBLE CHECK ASSEMBLY)
9	GALVANIZED STEEL LADDER, LOCATE AS DIRECTED BY CITY, SECURE TO VAULT.
10	PIPE SPOOL, CL. 52 D.I., PLAIN END
11	"UTILITY VAULT" OR APPROVED EQUAL 4" DCDC, USE 575 LA (4'–2" x 6'–6" x 4'–0" INSIDE) 6" DCDC, 4484 LA (4'–4" x 8'–4" x 6'–2" INSIDE) 6" DCDC, 5106 LA (5'–0" x 10'–6" x 4'–4" INSIDE) 8" DCDC, 5106 LA (5'–0" x 10'–6" x 6'–2" OR 4'–4" INSIDE) 10" DCDC, 5106 LA (3 HATCH) (5'–0" x 10'–6" x 6'–2" OR 4'–4") ORIENTATION AND LOCATION OF HATCHES TO PROVIDE CLEAR ACCESS TO VALVES AND DETECTOR CHECK ASSEMBLY
12	6" PVC DRAIN, DISCHARGE TO DAYLIGHT OR TO CATCH BASIN. MINIMUM SLOPE 1% UNLESS OTHERWISE APPROVED BY THE CITY. ADD SCREENS AT BOTH ENDS.
13	WATERTIGHT GROUT, INLET AND OUTLET PIPE, DRAIN PIPE AND ACCESS OPENING

NOTE:

AFTER PRESSURE TEST AND PURITY SAMPLES ARE RECEIVED, A CERTIFIED BACKFLOW TECHNICIAN SHALL SUPPLY DISTRICT WITH A WRITTEN TEST REPORT ON EACH BACKFLOW ASSEMBLY.

DOUBLE-CHECK DETECTOR BACKFLOW PREVENTION ASSEMBLY

Sallal Water Association

STANDARD DETAILS

W21

TYPE "A" BLOCKING
FOR 11 1/4°-22 1/2°-30° VERTICAL BENDS

		VB		S	D	L
PIPE SIZE NOMINAL DIAMETER- INCHES	TEST PRESSURE PSI	VERTICAL BEND DEGREES	No. OF CU. FT. OF CONC. BLOCKING	SIDE OF CUBE LIN. FT.	DIAM. OF SHACKLE RODS (2) INCHES	DEPTH OF RODS IN CONCRETE LIN. FT.
4"	300	11 1/4	8	2	5/8"	1.5
		22 1/2	11	2.2		2.0
		30	17	2.6		
6"	300	11 1/4	11	2.2	5/8"	2.0
		22 1/2	25	2.9		
		30	41	3.5		
8"	300	11 1/4	16	2.5	5/8"	2.0
		22 1/2	47	3.6		
		30	70	4.1	3/4"	2.5
12"	250	11 1/4	32	3.2	5/8"	2.0
		22 1/2	88	4.5	7/8"	3.0
		30	132	5.1		
16"	225	11 1/4	70	4.1	7/8"	3.0
		22 1/2	184	5.7	1 1/8"	4.0
		30	275	6.5	1 1/4"	
20"	200	11 1/4	91	4.5	7/8"	3.0
		22 1/2	225	6.1	1 1/4"	4.0
		30	330	6.9	1 3/8"	4.5
24"	200	11 1/4	128	5.0	1"	3.5
		22 1/2	320	6.8	1 3/8"	4.5
		30	480	7.9	1 7/8"	5.5

TYPE "B" BLOCKING
FOR – 45° VERTICAL BENDS

		VB		S	D	L
4"	300	45	30	3.1	5/8"	2.0
6"			68	4.1		
8"			123	5.0		
12"	250		232	6.1	3/4"	2.5
16"	225		478	7.8	1 1/8"	4.0
20"	200		560	8.2	1 1/4"	
24"			820	9.4	1 3/8"	4.5

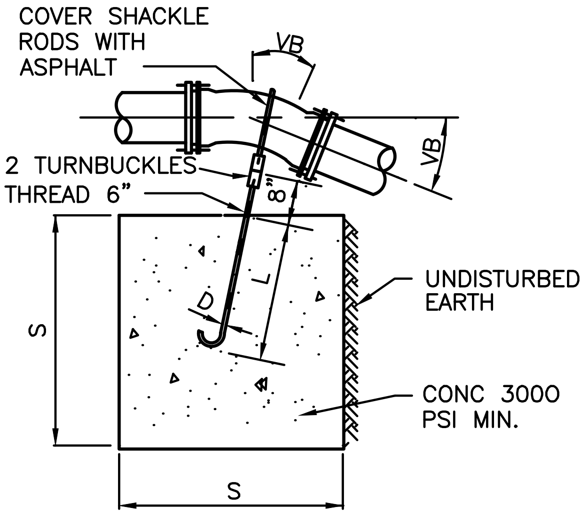

TYPE "A" BLOCKING

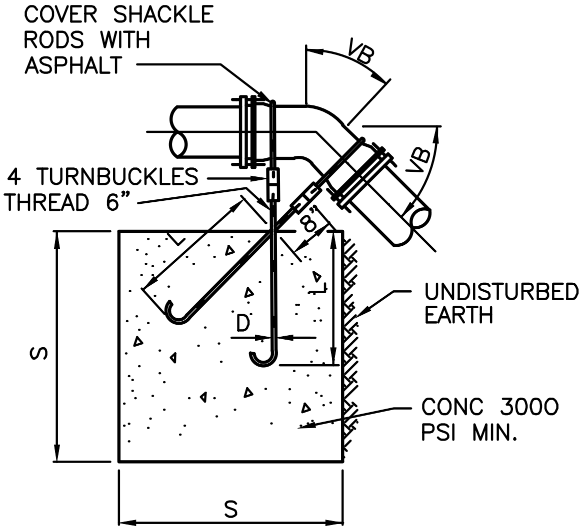

TYPE "B" BLOCKING

THIS TABLE REPRESENTS THE "MINIMUM" CONSTRUCTION STANDARD. APPROPRIATELY SIZED ANCHOR BLOCKS BASED ON EXISTING AND LOCAL CONDITIONS ARE REQUIRED

VERTICAL ANCHOR BLOCK

Sallal Water Association
STANDARD DETAILS

ATTACHMENT A

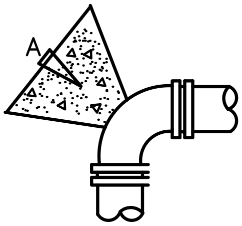

90° BEND

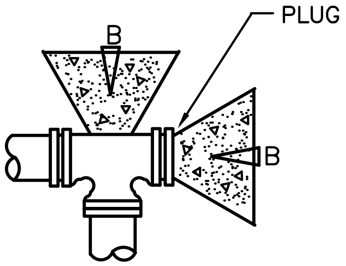

TEE

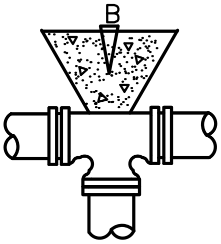

TEE

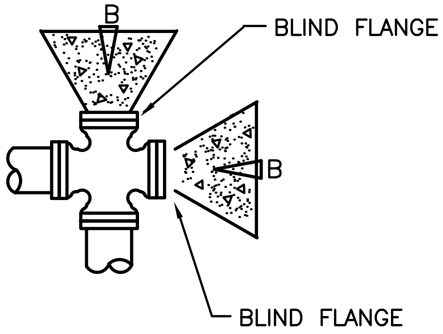

CAPPED CROSS

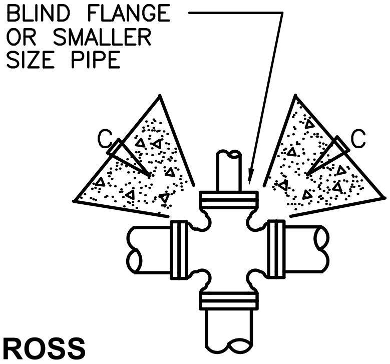

CROSS

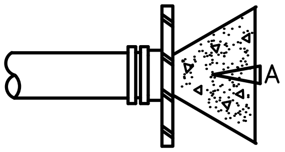

CAP

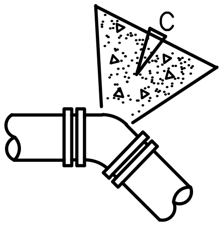

45° BEND

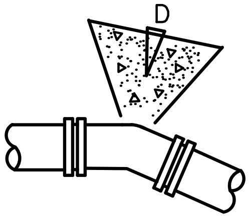

22 1/2 BEND

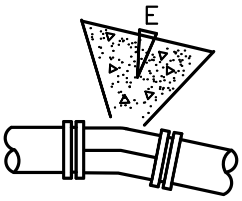

11 1/4 BEND

THRUST BLOCK
DETAIL 1 OF 2

Sallal Water Association
STANDARD DETAILS

W23A

THRUST BLOCK – TABLE

MIN. BEARING AREA AGAINST UNDISTURBED SOIL SQUARE FEET

PIPE SIZE	A(FT ^{2})	B(FT ^{2})	C(FT ^{2})	D(FT ^{2})	E(FT ^{2})
4"	3	1	1	1	1
6"	4	4	2	1	1
8"	7	6	4	2	1
10"	11	10	6	3	2
12"	16	14	9	5	3
14"	22	19	12	6	3
16"	29	25	16	8	4
18"	36	31	20	10	5

NOTES:

1. BEARING AREA OF CONCRETE THRUST–BLOCK BASED ON 200 PSI PRESSURE AND SAFE SOIL BEARING LOAD OF 2,000 POUNDS PER SQUARE FOOT.
2. AREAS MUST BE ADJUSTED FOR OTHER PIPE SIZES, PRESSURES AND SOIL CONDITIONS.
3. CONCRETE BLOCKING SHALL BE CAST IN PLACE AND HAVE A MINIMUM OF 1/4 SQUARE FOOT BEARING AGAINST THE FITTING. WRAP ALL FITTINGS IN 6 MIL PLASTIC PRIOR TO POURING BLOCK. NO CONCRETE SHALL BE PLACED NEAR BOLTS.
4. BLOCK SHALL BEAR AGAINST FITTINGS ONLY AND SHALL BE CLEAR OF JOINTS TO PERMIT TAKING UP OR DISMANTLING OF JOINT.
5. CONTRACTOR SHALL INSTALL BLOCKING ADEQUATE TO WITHSTAND FULL TEST PRESSURE AS WELL AS CONTINUOUSLY WITHSTAND OPERATING PRESSURE UNDER ALL CONDITIONS OF SERVICE.

THRUST BLOCK
DETAIL 2 OF 2

Sallal Water Association
STANDARD DETAILS

W23B

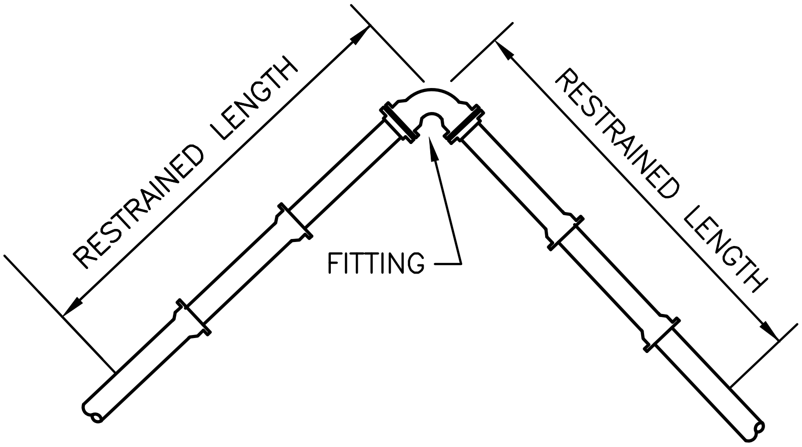

PIPE SIZE	90° BEND	45° BEND	22 1/2° BEND	11 1/4° BEND	TEE OR DEAD END CAP
	RESTRAINED LENGTH IN FEET				
4”	40	17	8	4	30
6”	55	23	11	6	39
8”	73	31	15	8	53
10”	88	37	18	9	67
12”	103	43	21	10	82
16”	133	55	27	13	110
18”	145	60	29	15	124

NOTES:

① RESTRAINED LENGTHS SHOWN ARE MINIMUM AND FOR LINEAL FEET REQUIRED ON EACH SIDE OF FITTING INDICATED.

② FOOTAGES ARE BASED ON 250 PSI PRESSURE AND 42 INCHES COVER. IF PRESSURE IS GREATER OR COVER IS LESS, THE RESTRAINED LENGTH SHALL BE INCREASED ACCORDINGLY.

THRUST RESTRAINT FOR DUCTILE IRON PIPE

Sallal Water Association
STANDARD DETAILS

W24

APPENDIX E

CROSS-CONNECTION CONTROL

ATTACHMENT A

SALLAL WATER ASSOCIATION
P.O. Box 378
249 S. Main Suite B
North Bend, WA 98045

~~Resolution~~ MOTION NO. 98-8

March 9, 1998

A ~~Resolution~~ Motion of the Sallal Water Association, adopting policy and procedure concerning Cross-Connection Control and Backflow Prevention Assemblies.

WHEREAS, the Sallal Water Association, desires to clarify that the installation of Backflow Prevention Assemblies throughout the Associations water distribution system is an essential part of the Associations regulations and standards and a condition of continued water service to its customers.

Section 1. The installation or maintenance of any Cross-Connection with the public water supply of the Sallal Water Association is prohibited, except as authorized herein. Any such Cross-Connection now existing or hereafter installed is hereby declared subject to immediate termination of water service and any such Cross-Connection shall be abated immediately, and

Section 2. The control or elimination of Cross-Connection shall be in accordance with the provisions of the Washington Administrative Code (WAC 246-290-490). The policies, procedures, and criteria for determining appropriate levels of protection shall be in accordance with The Accepted Procedures and Practice in Cross-Connection Control Manual, as published by the Pacific Northwest Section, American Waterworks Association, May 1990, Fifth Edition, and

Section 3. The Sallal Water Association, shall deny or discontinue water service to any customer failing to cooperate in the installation, maintenance, testing, or inspection of backflow prevention assemblies required and as stated in WAC 246-290-490.

Section 4. As a condition of new or continued water service, approved backflow prevention assemblies shall be installed and maintained by all customers who:

- (a) Are industrial or commercial customers not entitled to an exemption under Section 6.
- (b) Operate commercial or residential fire sprinkler systems connected to their plumbing and the Sallal Water Association distribution system.
- (c) Operate irrigation systems connected to their plumbing and the Sallal Water Association distribution system.
- (d) Maintain Cross-Connections of their water system with air conditioning systems, medical apparatuses, or other devices or processes where chemicals or other objectionable substances may be siphoned into the water system.
- (e) Maintain efficient plumbing arrangements which makes it impractical/
- (f) In the judgement of the Director of Public Works compromises the public's health or safety. * Certified Water System Operator

Section 5. An "Approved Backflow Prevention Assembly" means a Backflow Prevention Assembly model approved by the State of Washington, Department of Health and the Sallal Water Association. Unless an exemption is granted, the minimum requirements for a Backflow Prevention Assembly shall be that it consist of a Double Check Valve Assembly.

* Replace Director of Public Works with Certified Water System Operator in all instances

Section 6. Pressure Vacuum Breakers may be substituted for other Backflow Prevention
* Assemblies required under this regulation where the Director of Public Works or his/her
representative determines that the circumstances and good engineering practices allow such
substitution without compromising protection of water quality and public health. Where an
industrial or commercial customer can demonstrate to the satisfaction of the Director of Public
Works, or his representative, that there are no Cross-Connections with the water supply on their
premises and that no health hazard is posed by reason of the presence of toxic materials on the
* environment, the Director of Public Works, or his representative may grant the customer an
exemption from the Cross-Connection requirements herein. Decisions made under this section
shall be made at the sole discretion of the Director of Public Works, or his representative to carry
* out the Cross-Connection control programs of the Association. Exemptions are subject to periodic
review and may be revoked whenever a Cross-Connection is made or a risk to public health or
water quality is present.

* **Section 7.** The Director of Public Works and such staff members as he/she may designate or
representatives are delegated the authority to inspect, approve, and disapprove Backflow
Prevention Assemblies; to require corrections, modifications, repairs, or maintenance on Backflow
Prevention Assemblies and to inspect all premises of customers where Backflow Prevention
Assemblies may be required. A minimum standard for the maintenance and installation of
Backflow Prevention Assemblies shall be those set forth in the Accepted Procedures and Practice
in Cross-Connection Control Manual, May 1990, Fifth Edition, as published by the Pacific
Northwest Section of the American Waterworks Association. The Director of Public Works is *
authorized to establish higher standards for installation and maintenance of Backflow Prevention
Assemblies where he/she finds that good engineering practice, industry standards or the protection
or public health requires such higher standards.

Section 8. As a condition of a continued water service, customers shall make their premises, including buildings and structures, to which water is supplied, accessible to the Sallal Water Association personnel periodically to determine whether Backflow Prevention Assemblies are required or are properly installed and maintained. Testing and inspections will be made annually.

Section 9. Prior to the installation of irrigation systems and Backflow Prevention Assemblies, the customer shall obtain a permit from the Sallal Water Association for such installation.

Section 10. The requirements herein for Backflow Prevention Assembly installation shall apply even though building codes may not require Backflow Prevention Assemblies.

* Replace Director of Public Works with Certified Water System Operator in all instances

ATTACHMENT A

Section 11. The Sallal Water Association, prohibits interconnection of private water supplies with the Associations distribution system. Auxiliary water supplies (private wells, piped irrigation sources, etc.) are a major Cross-Connection control hazard and therefore, must be effectively isolated from the domestic water supply. The Sallal Water Association Cross-Connection Control policies and requirements for customers with private wells are as follows:

1. No Backflow protection is required if the source is verified to be permanently inactive and abandoned in accordance with the requirements of the Department of Health.
2. If the well remains active, an approved reduced pressure backflow assembly is required at the service connection to provide a measure of protection against inadvertent interconnection of the supplies.

New service will be locked off until compliance is verified by the Sallal Water Association. Visual inspection of piping is required for premises retaining active well systems.

Section 12. All Backflow Prevention Assemblies are subject to annual inspection and testing. The cost of installation, annual performance testing, and any required maintenance of the Backflow Prevention Assemblies is the responsibility of the property owner.

Adopted by the Sallal Water Association:

Gerald Prior, Vice-President

Date: March 9, 1998

Approved to form by ~~General Counsel~~ Board of Trustees

MOTION NO. 98-8 March 9, 1998

OFFICIAL SEAL
JOAN LOUISE BOTTEN
NOTARY PUBLIC - WASHINGTON
NOTARY BOND FILED IN
KING COUNTY
My Commission Expires March 1, 2002

Joan Louise Botten
March 9, 1998

ATTACHMENT A

Excerpt from RULES AND REGULATIONS

OF

SALLAL WATER ASSOCIATION

August 2019

33. BACKFLOW PREVENTION TESTING:

Underground irrigation systems, fire suppression systems and all other listed devices of the Association require back flow prevention assembly per WAC 246-290-490. All backflow assemblies must be tested after the initial ins-tallation, repairs and once yearly thereafter. The Association will notify members annually when to have their backflow assemblies inspected by a licensed professional. The Association must be sent a copy of the test report.

Any member who does not comply with the backflow testing requirements will be subject to a minimum fine of $500 and water shut off. A reconnection fee will be imposed after a shut off. Thereafter, the member will be subject to the annual inspection not only by a licensed cross connection specialist, but also by the Association's Water System Superintendent.

Members wishing to disconnect their backflow assemblies must do so in the presence of the Association's water system superintendent. The member is then subject to the current rules and regulations governing backflow assemblies. Failure to comply with this sequence will result in the above mentioned fine and shut off policy.

ATTACHMENT A

Sallal Water Association
CCC Program Decision Summary Table

Decision Item	Decision
1. Type of Program [General, WAC 246-290-490(2)(e)]	
a. Premises isolation only	X
b. Premises isolation and in-premises protection (combination program)	
2. Extent of Coordination with LAA [WAC 246-290-490(2)(d)]	
a. Information exchange	X
b. Interaction	
c. Joint program	
3. Relationship with Customer [Element 1]	
a. Signed service agreement or contract	
b. Ordinance/resolution; implied service agreement	X
4. Enforcement of Corrective Action [Element 1]	
a. Rely upon shut-off of water service	X
b. Rely upon purveyor-installed premises isolation	
5. Assessment and Re-assessment of Hazard [Element 2]	
a. By purveyor's staff or equivalent	X
b. By cross-connection control specialist (CCS) employed by customer; report reviewed by purveyor's CCS	
6. Location and Ownership of Premises Isolation Assembly [Element 3]	
a. On purveyor's service line	
b. On customer's service line	X
7. CCS Option – Purveyor's Program Management [Element 4]	
a. Purveyor's staff member certified	X
b. Inter-agency agreement or use other agency's CCS	
c. Contract with consultant CCS	
8. Testing of Assemblies [Element 5]	
a. By purveyor's staff or purveyor-employed backflow assembly tester (BAT)	
b. By customer-employed (contractor) BAT	X
9. Cost Recovery [WAC 246-290-100(4)(h) and –105(4)(p)]	
a. Borne by all customers (general water rates)	
b. Assessed to specific class (commercial meters)	
c. Each customer directly bears cost	X

APPENDIX CROSS-CONNECTION CONTROL PROGRAM

1. AUTHORITY

Sallal Water Association (Association) has developed a Cross-Connection Control Program as part of its water system comprehensive plan as required under WAC 246-290-100 as outlined under WAC 246-290-490. Sallal implemented administrative and technical procedures to protect the water system from contamination via cross connections.

The purpose of the Association's Cross-Connection Control Program is to protect the Association's public water supply from contamination by outside sources.

The Association's responsibility for cross-connection control shall begin at the water supply sources, include all storage and distribution facilities, and end at the point of delivery to each customer's water system, which is the water meter. The Association is not responsible for eliminating or controlling cross-connections within the customer's water system.

The Association's Cross-Connection Control program was developed and authorized under Motion No. 98-8 adopted by the Board of Trustees on March 9, 1998 establishing their legal authority to implement a Cross Connection Control Program.

Motion No. 98-8 describes the operating policies and technical provisions of Sallal's Cross-Connection Control Program. It describes the corrective actions used to ensure that members comply with the Association's Cross-Connection Control requirements.

In order to insure that cross connections between the Sallal Water Association distribution system and a consumer's water system are eliminated or controlled by the installation of an approved backflow preventer commensurate with the degree of hazard, the Association contracted with Dick Unger of Water Specialties Company Incorporated: (Small Water systems Consultant and Backflow Device Testing) on January 22, 1998 to provide the following services.

1. Provide the water system with an approved ordinance acceptable to the Department of Health.

2. Provide an article for the local newspaper to inform the members that we are implementing a Cross Connection Control Program.

3. Provide a complete survey/inspection of all facilities and residences within the system boundaries.

4. Prepare all compliance letters and reports

5. Test all existing and new installations of backflow prevention assemblies

6. Record all data, test reports and problem areas

7. Provide the Association with liability insurance during the time of contract

8. Provide the Association and the Department of Health with complete records of the program and its contents.

Water Specialties Company field tested all facilities within the system boundaries and provided Sallal with backflow prevention assembly testing reports on all possible cross connections. They cleaned and repaired any devices that failed their test.

They provided a backflow prevention tracking system computer program called CheckMate SE, from AmbiTec, an easy-to-use cross connection control management software product. This program enables Sallal to track testable backflow prevention assemblies or devices. Information is entered into the program as received.

2. EVALUATION PROCEDURES AND SCHEDULES

As a condition of new connection, an initial evaluation to assess the degree of hazard posed by the consumer's premises to the Association's distribution system shall be conducted. Sallal shall determine the method of backflow protection required, if any. The required method of backflow protection shall be installed and the consumer shall provide a satisfactory qualified test by a qualified backflow assembly tester from the Association's qualified backflow assembly testers list to the Association before water service is provided. Sallal shall complete a new account form as follows for each new connection:

ATTACHMENT A

SALLAL WATER ASSOCIATION MEMBER No._____

PO BOX 378
NORTH BEND, WA. 98045
425-888-3650 FAX 425 831-5392

NEW MEMBER FORM

DATE: ____

NEW MEMBER: ____

PROPERTY ADDRESS: ____
____

MAILING ADDRESS: ____
____

PHONE #: ____

PREMISES USE: ____

ARE YOU A MOBILE HOME OR RV PARK? YES___ NO___
DO YOU HAVE A FIRE PROTECTION SYSTEM? YES___ NO___
IF YES, USING CHEMICAL OR FOOD-GRADE CHEMICAL ADDITIONS? YES___ NO___
DO YOU HAVE A BUILT-IN IRRIGATION SYSTEM? YES___ NO___
IF YES, USING CHEMICAL ADDITIONS? YES___ NO___
DO YOU HAVE A PLUMBED IN POOL, SAUNA, SPA OR HOT TUB YES___ NO___
DO YOU HAVE A BOILER? YES___ NO___

_____ AS BUILT UPDATE ON FILE

ATTACHMENT A

BACKFLOW PREVENTION ASSEMBLY
TEST REPORT

NAME ____

SERVICE ADDRESS: __________________________________

LOCATION ____

ASSEMBLY TYPE: ____________________________________

MANUFACTURER: ____________ MODEL: ______________ SIZE: ________ SERIAL NO: ____________

	INITIAL TEST RESULTS	TEST AFTER REPAIR OR CLEANING
RPBA	Line Pressure ____________ Pressure Drop Across No. 1 Check Valve ____________psid Relief Valve Opened ____________psid No. 1 Check Valve: Closed tight ....☐ Leaked ....☐ No. 2 Check Valve: Closed tight ....☐ Leaked ....☐ Minimum A/G present Yes______ No______ Passed Test: Yes______ No______	Pressure Drop Across No. 1 Check Valve ____________psid Relief Valve Opened ____________psid No. 1 Check Valve: Closed tight ....☐ Leaked ....☐ No. 2 Check Valve: Closed tight ....☐ Leaked ....☐ Minimum A/G present Yes______ No______ Passed Test: Yes______ No______
DCVA	Line Pressure ____________ No. 1 Check Valve: Differential ____________psid No. 2 Check Valve: Differential ____________psid Passed Test: Yes__________ No__________	No. 1 Check Valve: Differential ____________psid No. 2 Check Valve: Differential ____________psid Passed Test: Yes__________ No__________
PVBA/ SVBA	Line Pressure ____________ Air Inlet: Opened ____________psid Failed to open ....☐ Check Valve: ____________psid Leaked ....☐ Passed Test: Yes__________ No__________	Line Pressure ____________ Air Inlet: Opened ____________psid Failed to open ....☐ Check Valve: ____________psid Leaked ....☐ Passed Test: Yes__________ No__________
AG	Minimum Separation: Yes ______ No______	**PLEASE RECORD REPAIR INSPECTION CLEANING INFORMATION IN SECTION BELOW**

IS THIS A PROPER INSTALLATION? Yes______________ No______________

WA STATE APPROVED ASSEMBLY:__________ Yes __________ No

REMARKS: ____

____

Test Equipment: Make__________ Model______________ Serial #__________ Type __________

I CERTIFY THE ABOVE REPORT TO BE TRUE:

Certified ____
Certified Testers' Typed or Printed Name

Initial Test By: ______________________ Cert. No. ______________ Date______________
Signature

Repaired By:______________________ Cert. No. ______________ Date______________

Repair Test By:______________________ Cert. No. ______________ Date______________
Signature

As a condition of continued water service, existing connections were subject to an initial evaluation to assess the degree of hazard posed by the member's premises to the Association's distribution system.

As a condition of continued water service, periodic re-evaluations shall be conducted on all service connections.

3. IMPLEMENTING PROCEDURES AND SCHEDULES

The Association shall eliminate cross-connections to the extent feasible. When cross-connections cannot be eliminated they shall be controlled by installation of approved backflow preventers commensurate with the degree of hazard.

The Association's Cross-Connection Control Program shall consist of premises isolation at or near the service connection or an alternative location acceptable to the Association between the service connection and the first point of any hazard. The purposes of premises isolation is to isolate the possibility of backflows from the customer's water system into the Association's distribution system.

The Association will determine the appropriate degree of hazard and the method of backflow protection to accomplish premises isolation in accordance with the following:

The Association shall ensure that an approved reduced pressure backflow assembly (or reduced pressure detector assembly) is installed for all premises posing a high degree of cross-connection hazard including, but not limited to the following list:

- Agricultural (commercial farms and dairies)
- Auto, repair and gas stations
- Beverage bottling plants
- Car washes
- Chemical plants
- Commercial laundries and dry cleaners
- Complex piping (schools)
- Premises where both reclaimed water and potable water are provided
- Film processing facilities
- Food processing plants
- Food service
- Hospital, medical centers, nursing homes, veterinary, medical and dental clinics, and blood plasma centers
- Premises with a heat exchanger and or solar potable hot water systems

- Premises with fire systems using chemical or food-grade chemical additions
- Premises with irrigation systems using chemical additions
- Laboratories
- Metal plating industries
- Mortuaries
- Nurseries
- Petroleum processing or storage plants
- Radioactive material processing plants or nuclear reactors*
- Survey access denied or restricted

* Reduced pressure backflow assemblies for connections serving these premises are acceptable only when used in combination with an in-plant approved air gap; otherwise, the Association shall require an approved air gap at the service connection.

The Association shall require at minimum, double check value assembly (or double check detector assembly) installed in accordance with WAC 51-46-0603 of the UPC for premises posing a low degree of cross-connection hazards, including, but not limited to the following list:

- Drinking Fountain
- Mobile home and recreational vehicle parks
- Agricultural (non commercial farms)
- Premises with fire systems using no chemical additions*
- Premises with irrigation systems
- Premises with plumbed in swimming pools, sauna, spas or hot tubs
- Premises with boilers
- Tall Buildings (greater than 3 stories)

The Association prohibits interconnection of any private water supply with the Association's distribution system. A likely source of a major cross-connection control hazard occurs where water service is provided to a home that may have an auxiliary source of water supply such as a lake, pond or well. The Association's policy requires that the owner of property or any person residing thereon receiving water service from the Association shall not connect, directly or indirectly, the water service line or any part of the plumping of such structure receiving water service from the Association with any other water source, water system, plumbing or any utility line whatsoever.

4. CROSS-CONNECTION CONTROL SPECIALIST

The Association personnel shall consist of at least one State certified Cross-Connection Control Specialist who will implement the Cross-Connection Control Program.

5. APPROVED BACKFLOW PREVENTER INSPECTION PROCEDURES

Improperly protected cross-connection plumbing may allow water to flow in a reverse direction and backflow into the drinking supply and contaminate potable water. Washington State Health Department requires that properties with potential cross-connections be checked for correct plumbing and have a properly installed backflow prevention assembly.

All backflow prevention assemblies are subject to annual inspection and testing by a Department of Health certified backflow assembly tester.

The Association will require that Department of Health backflow assembly testers who test in the Association's water service area complete a backflow assembly tester information form. A file will be kept containing current information on each backflow assembly tester which includes a copy of the current State issued Validation Card and a copy of the testers differential pressure test kit certification of accuracy of calibration. Backflow assembly testers shall use the standard Department of Health Backflow Prevention Assembly Test Report forms when testing within the Association's water service area. The Association will maintain a list of all Department of Health backflow assembly testers approved to test within the Association's water service area. A backflow assembly tester information form and Department of Health backflow prevention assembly test report follows:

SALLAL WATER ASSOCIATION

BACKFLOW ASSEMBLY TESTER INFORMATION

TESTER NAME: ______________________________

ADDRESS: ______________________________

____

PHONE #: ______________________________

COMPANY NAME: ______________________________

ADDRESS: ______________________________

____

COMPANY PHONE #: ______________________________

CERTIFICATE NO. ______________ ISSUE DATE: ______________

Include a copy of your State issued current Validation Card of certificate of competency

MAKE/MODEL OF TEST EQUIPMENT: ______________________________

Include a copy of your backflow assembly tester differential pressure test kit certification of accuracy of calibration.

Backflow assembly testers shall use the Association's backflow assembly test report forms when testing within the Association's water service area. This is the standard Department of Health Backflow Prevention Assembly Test Report Form.

______________________________ ______________

Signature of Backflow Assembly Tester Date

The cost of installation, annual performance testing, and any required maintenance of the backflow prevention assemblies is the responsibility of the property owner.

As a condition of continued water service, customers shall make their premises, to which water is supplied, accessible to a state certified backflow assembly tester on the Association's backflow assembly tester list for inspection and testing annually to determine whether backflow prevention assemblies are properly installed, maintained and are operational.

The Association may deny or discontinue water service to any customer failing to cooperate in the installation, inspection, testing, maintenance or repair of an approved backflow prevention devise pursuant to WAC 246-290-490. The Association shall notify the Department of Health prior to taking such action except in the event of an emergency.

The Association will promptly notify property owners with known potential cross-connections. The Association shall also notify, on an annual basis, in approximately April or May of each year, all customers having approved backflow prevention devices of the need for an annual inspection. The Association's Cross-Connection notice requirements are as follows:

a.) Cross-connection notices will be sent to Association property owners with potential cross-connections. The notice will give property owners 30 days to install backflow prevention assemblies, have the assemblies tested by a certified backflow tester from the Association's backflow assembly tester list and provide the Association with a backflow prevention assembly test report. A backflow assembly tester list and backflow prevention assembly test form will be included with the cross-connection notice. The cross-connection notice is as follows:

SALLAL WATER ASSOCIATION
PO BOX 378
NORTH BEND, WA 98044
425-888-3650 FAX 425 831-5392

DATE: ________________

NAME
MAILING ADDRESS
CITY/STATE/ZIP

MEMBER NO.
SERVICE ADDRESS

CROSS-CONNECTION NOTICE
(HIGH RISK)

The Sallal Water Association has developed a Cross-Connection Control Program as required under WAC 246-290-100 as outlined under WAC 246-290-490. The purpose of the Association's Cross Connection Control Program is to protect the Association's public water supply from contamination.

The Association conducted an initial evaluation to assess the degree of hazard to the Association's distribution system posed by the above premises.

Premises Assessment

Type

Premises posing a high degree of cross-connection hazard are required to ensure that an approved reduced pressure backflow assembly (or reduced pressure detector assembly) is installed for premise isolation. Backflow prevention assemblies are subject to annual inspection and testing by a Department of Health certified backflow assembly tester approved to test in the Association's water service area.

Notice is hereby given that you are required to install an approved reduced pressure backflow assembly (or reduced pressure detector assembly), have the assembly tested by a certified backflow tester from the Association's backflow assembly tester list and provide the Association with a backflow prevention assembly test report within 30 days of the date of this notice.

Enclosed you will find a list of certified backflow assembly testers approved to test in the Association's water service area and a backflow assembly test form.

If you have any questions please contract the Sallal Water Association office at 425 888-3650 between the hours of
8:00 a.m. and 4 p.m.

Sincerely,

Sallal Water Association

ATTACHMENT A

SALLAL WATER ASSOCIATION
PO BOX 378
NORTH BEND, WA 98045
425-888-3650 FAX 425 831-5392

DATE:

NAME
MAILING ADDRESS
CITY/STATE/ZIP

MEMBER NO.
SERVICE ADDRESS

CROSS-CONNECTION NOTICE
(LOW RISK)

The Sallal Water Association has developed a Cross-Connection Control Program as required under WAC 246-290-100 as outlined under WAC 246-290-490. The purpose of the Association's Cross-Connection Control Program is to protect the Association's public water supply from contamination.

The Association conducted an initial evaluation to locate premises with built-in irrigation systems, fire systems, plumbed in swimming pools, sauna, spas or hot tubs, boiler, farm activity or any other item that may cause a potential cross-connection and are considered to be a low degree of cross-connection hazard to the Association's distribution system.

Premises posing a low degree of cross-connection hazards are required to ensure that at minimum, an approved double check value assembly (or double check detector assembly) is installed for premise isolation at or near the service connection or located between service connection and the first point of any hazard. Cross-connection hazards, which pose the risk of chemical additions, are required to install an approved reduced pressure backflow assembly (or reduced pressure detector assembly) in place of an approved double check value assembly (or double check detector assembly). Please contact the Association if you use chemical additions. Backflow prevention assemblies are subject to annual inspection and testing by a certified backflow assembly tester approved to test in the Association's water service area.

Notice is hereby given that you are required to install at minimum, an approved double check value assembly (or double check detector assembly), have the assembly tested by a certified backflow tester from the Association's backflow assembly tester list and provide the Association with a backflow prevention assembly test report within 30 days of the date of this notice.

Enclosed you will find a list of certified backflow assembly testers approved to test in the Association's water service area and a backflow assembly test form. If you have any questions please contract the Sallal Water Association office at 425 888-3650 between 8am and 4 pm.

SALLAL WATER ASSOCIATION
PO BOX 378
NORTH BEND, WA 98045
425-888-3650   FAX 425 831-5392

DATE:

NAME
MAILING ADDRESS
CITY/STATE/ZIP

MEMBER NO.
SERVICE ADDRESS

CROSS-CONNECTION NOTICE

The Sallal Water Association has developed a cross-connection control program as required under WAC 246-290-100 as outlined under WAC 246-290-490. The purpose of the Association's cross-connection control program is to protect the Association's public water supply from contamination.

The backflow prevention assembly on your water system is due for its annual inspection and testing.

Notice is hereby given that you are required to have the backflow prevention assembly on your water system inspected and tested by a certified backflow tester from the Association's backflow assembly tester list and provide the Association with a backflow prevention assembly test report within 30 days of the date of this notice.

Enclosed you will find a list of certified backflow assembly testers approved to test in the Association's water service area and a backflow assembly test form.

If you have any questions please contact the Sallal Water Association office at 425 888-3650 between 8 a.m. and 4 p.m.

Sincerely,

Sallal Water Association

b.) Any property owner receiving a cross-connection notice and not providing the Association with a backflow prevention assembly test report within 30 days of the cross-connection notice will receive a non-compliance cross-connection notice. Any member who receives a non-compliance cross-connection notice will be charged a non-compliance cross-connection notice fee. The notice will give property owners an additional 30 days to provide a backflow prevention assembly test report and inform them that failure to comply may result in termination of water service. Another backflow assembly tester list and backflow assembly test form will be included with the non-compliance cross-connection notice. The non-compliance cross-connection notice follows:

ATTACHMENT A

SALLAL WATER ASSOCIATION
PO BOX 378
NORTH BEND, WA 98045
425-888-3650 FAX 425 831-5392

DATE:

NAME
MAILING ADDRESS
CITY/STATE/ZIP

MEMBER NO.
SERVICE ADDRESS

NON-COMPLIANCE CROSS-CONNECTION NOTICE

The due date has passed since you were notified that annual inspection and testing was due for the backflow prevention assembly on your water system. No test result with a BACKFLOW PREVENTION ASSEMBLY TEST REPORT has reached this office. The above account has been charged a non-compliance cross-connection notice fee.

Notice is hereby given that you are out of compliance with the Association's Cross-Connection Control Program and are required to have the backflow prevention assembly on your water system inspected and tested by a certified backflow tester from the Association's backflow assembly tester list and provide the Association with a BACKFLOW PREVENTION ASSEMBLY TEST REPORT within 30 days of the date of this notice. Failure to comply may result in the termination of your water service.

Enclosed you will find a list of certified backflow assembly testers approved to test in the Association's water service area and a backflow assembly test form.

If you have any questions please contract the Sallal Water Association office at 425 888-3650 between 8 a.m. and 4 p.m.

Sincerely,
SALLAL WATER ASSOCIATION

c.) Any property owner who receives a non-compliance cross-connection notice and does not provide the Association with a backflow prevention assembly test report within the additional 30 days of the non-compliance cross-connection notice will receive a termination of water cross-connection notice. Any member who receives a termination of water cross-connection notice will be charged a termination of water cross-connection notice fee. This notice will give property owners official notice that a backflow prevention assembly test report must be provided to the Association or water service may be terminated and that a hearing on the proposed disconnection will be heard before the Board of Trustees of the Association at the next regularly scheduled meeting of the Board of Trustees. The meeting date, time and place shall be specified. The notice shall further advise that the property owner or any person interested in water service to the property may appear then and there to present objections or complaints concerning termination of water service. The notice shall further advise that if water service is terminated a shut off fee will be charged. Another backflow assembly tester list and backflow assembly test form will be included with the termination of water cross-connection notice. The termination of water cross-connection notice is as follows:

ATTACHMENT A

SALLAL WATER ASSOCIATION
PO BOX 378
NORTH BEND, WA 98045
425-888-3650 FAX 425 831-5392

September 1, 2001

NAME
MAILING ADDRESS
CITY/STATE/ZIP

MEMBER NO.
SERVICE ADDRESS

TERMINATION OF WATER CROSS-CONNECTION NOTICE

Our records show that no test result with a BACKFLOW PREVENTION ASSEMBLY TEST REPORT for the annual inspection and testing of the backflow prevention assembly on your water system has reached the Association office and service will be terminated on __ _, 2002 due to failure to comply with the Association's Cross-Connection Control Program. The above account has been charged a termination of water cross-connection notice fee.

A hearing will be held on the proposed termination of water service on _____ __, 2002, at the regular meeting of the Board of Trustees. Please call 888-3650 for meeting location.

The property owner or any other interested person receiving a copy of the notice may appear at said hearing and present any objection or complaint concerning water service termination. In the event that the Association does not receive test results with a backflow prevention assembly test report before said meeting, and neither property owner nor interested person or representative appears at the hearing to make such objection or complaint of said failure to comply with the Association's Cross-Connection Control Program and proposed termination of water service on the date first written above, said water service of such property shall be terminated on _______ __, 2002 without further notice. If water service is terminated, a shut off charge will be added to the above account.

Prior to termination of your water service the Association is required to notify the Department of Health of any customer failing to cooperate in the installation, inspection, testing, maintenance or repair of approved backflow prevention required by WAC 246-290-490 except in the event of an emergency.

Unauthorized resumption of service will result in the removal of such connection. An additional fee shall be made for such service.

Enclosed you will find a list of certified backflow assembly testers approved to test in the Association's water service area and a backflow assembly test form.

Sincerely,
SALLAL WATER ASSOCIATION

6. BACKFLOW PREVENTION ASSEMBLEY TESTING QUALITY CONTROL PROGRAM

The Association shall require backflow prevention assemblies be models included on the current list of backflow prevention assemblies approved for use in Washington State. The Association may allow testable backflow prevention assembles that are not on the current list of backflow prevention assemblies approved for use in Washington State if the following applies:

a.) The backflow prevention assembly was included on the list of backflow prevention assemblies approved for use in Washington State and/or Uniform Building Code list of approved backflow prevention assemblies at the time of installation;
b.) The backflow prevention assembly has been properly maintained;
c.) The backflow prevention assembly is commensurate with the Association's assessed degree of hazard as determined by the Association in its sole discretion; and
d.) The backflow prevention assembly has been inspected and tested annually and has successfully passed the annual tests.

The Association shall require that an unlisted backflow prevention assembly be replaced by an approved assembly commensurate with the degree of hazard, when the unlisted assembly:

a.) Is moved; or
b.) Cannot be repaired using spare parts from the original manufacturer.

The Association shall require that testing be conducted on approved backflow assemblies:

a.) At the time of installation;
b.) Annually after installation;
c.) After a backflow incident; and
d.) After an assembly is repaired, reinstalled, or relocated.

7. BACKFLOW INCIDENTS RESPONSE PROCEDURES

The Association shall notify the Board of Trustees and the local Department of Health as soon as possible, but no later than the end of the next business day, when a backflow incident is known by the Association to have:

a.) Contaminated the Association's public water system.
b.) Occurred within the premises of a customer served by the Association

The Association shall document details of backflow incidents on the following form:

SALLAL WATER ASSOCIATION
PO BOX 378
NORTH BEND, WA 98045
425-888-3650 FAX 831-5392

REPORT DATE: ____________
REPORTED BY: ____________
TITLE: ____________
DATE OF INCIDENT: ____________
TIME OF OCCURRECE: ____________

General Location(Street, etc.): ____________

Backflow Originated From:
Name of Premise: ____________

Street Address: ____________City: ____________

Contact Person: ____________Phone #: ____________

Type of Business: ____________

Description of contaminants:(attach Chemical Analysis or MSDS if available)
____
____

Distribution of Contaminants:
Contained within customer's premise: Yes:_____ No:_____
Number of persons affected: ____________

Effect of Contamination:
Illness Reported: ____________
Physical irritation reported: ____________
____

Cross Connection Source of Contaminant:(boiler, chem. pump, irrigation system, etc.)
____
____

Cause of Backflow:(main break, fire flow, etc.)
____
____

Corrective Action Taken to Restore Water Quality (main flushing,disinfection, etc.)
____
____

Corrective Action Ordered to Eliminate or Protect from Cross Connection:
(type of backflow preventer, location, etc.)
____

Type of Backflow Preventer Isolating Premises:
RPBA:_____ RPDA:_____ DCVA:_____ DCDA:_____ Other Type:________

Date of Latest Test of Assembly: ____________

Notification of State [Provincial] Health Department:
Date: __________ Time: __________ Person Notified: ____________
Attach sheets with additional information, sketches, and/or media information, and mail to:
PNWS-AWWA

c/o George Bratton
1252 S. Farragut Drive
Coupeville WA 98239

8. CONSUMER EDUCATION AND INFORMATION

Each year the Association mails a water quality report to all members, including information on cross-connection control, which educates the Association's members about water system operations. The report will inform Association customers that premises with built-in irrigation systems, fire systems, plumbed in swimming pools, sauna, spas or hot tubs, boiler or any other item that may cause a potential cross-connection is required to have an approved backflow prevention assembly and have it tested annually. It will ask members with potential cross-connections who did not receive a cross-connection notice to contact the Sallal Water Association business office. It will inform customers of safe ways to use animal watering troughs.

The Sallal Water Association is required to hold an Annual Meeting of the Membership each year. As part of the Annual Meeting notice, a section is devoted to notifying all members of record of the Cross-Connection Control Program.

New members, as part of their new member packet, are also notified of the Cross-Connection Control Program and the importance of their cooperation.

Prior to the first mailing of annual compliance letters, an article is placed in the local newspaper notifying Sallal members of the Washington State Department of Health Drinking Water Regulations Relating to Cross-Connection.

Periodically, generally in the summer months, member's water use is assessed and those members using higher amounts of water than usual are contacted to see if they have recently installed a cross-connection. At least one time during the summer months, the same question is asked on the billing statements.

The Sallal Water Association has joined THE GROUP, an organization of Western Washington Cross Connection Prevention Professionals and receives monthly newsletters and information. The purpose of the Group is to share the different cross connection control programs with each other with a goal of uniformity and sharing of information. Sallal expects to become more involved in The Group and to use them as a resource as necessary.

9. RECORD KEEPING

The Association maintains a master list of service connections where an approved backflow prevention assembly is required. The Association uses CheckMate SE, an easy-to-use cross connection control management software product provided by Water Specialties Company to maintain these records.

The Association shall keep inventory information records on customers pertaining to the master list as follows:

a.) Assessed degree of hazard
b.) Approved backflow assembly
c.) Backflow assembly description (type, manufacturer, model, size and serial number)
d.) Backflow assembly location
e.) Installation date
f.) History of inspection, tests and repairs
g.) Test results
h.) Person performing tests

The Association shall complete annual cross-connection summary reports.

The Association shall document details of backflow incidents. Such documentation shall be included in the cross-connection summary report.

Records pertaining to the master list shall be kept as long as the customer poses a cross-connection hazard to the Association's distribution system.

Records regarding inventory information shall be kept for five years or for the life of the approved backflow preventer whichever is shorter.

Records regarding backflow incidents and annual summary reports shall be kept for five years.

The Association shall make all cross-connection records and reports available to the Department of Health upon its request.

10. RECLAIMED WATER

There are no known facilities that distribute and or receive reclaimed water within the Sallal Water Association's water service area.

APPENDIX F

WATER QUALITY STANDARDS

ATTACHMENT A

Sallal Water Association

water
quality report
2017

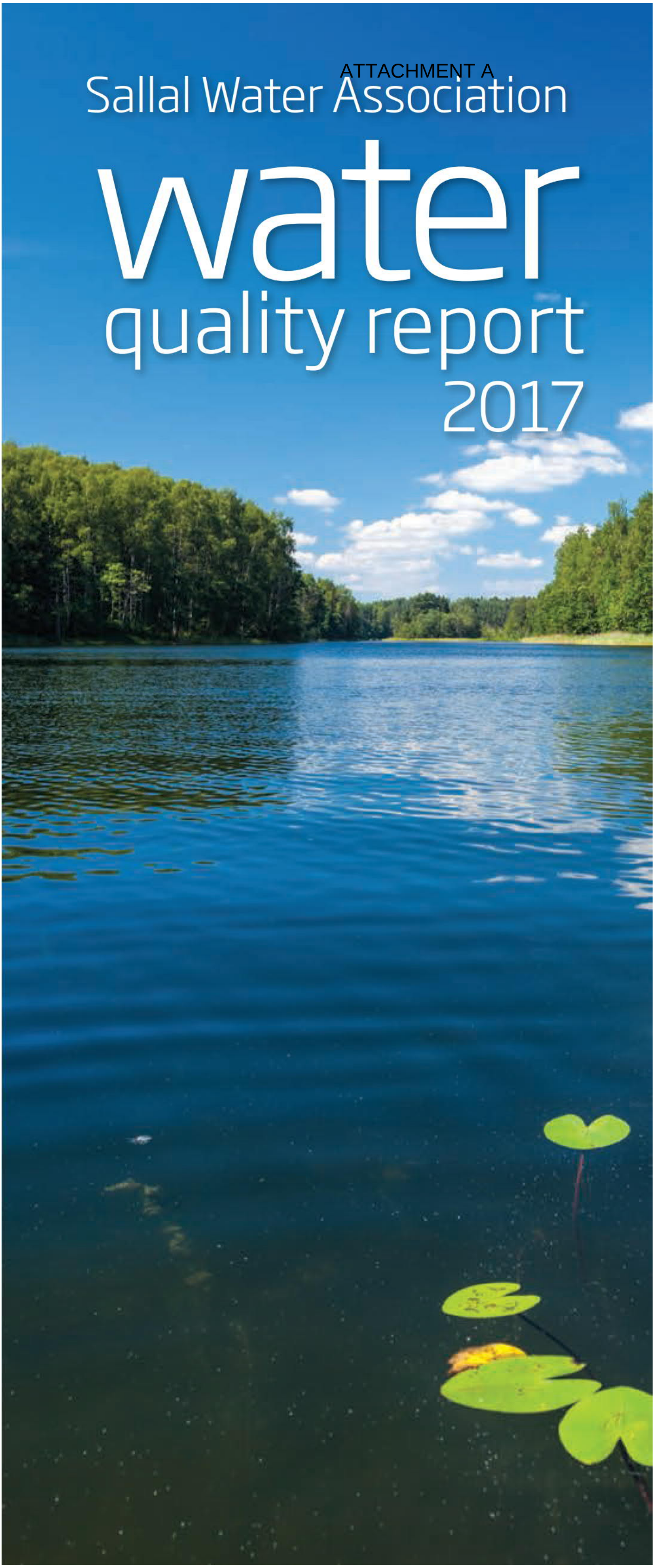

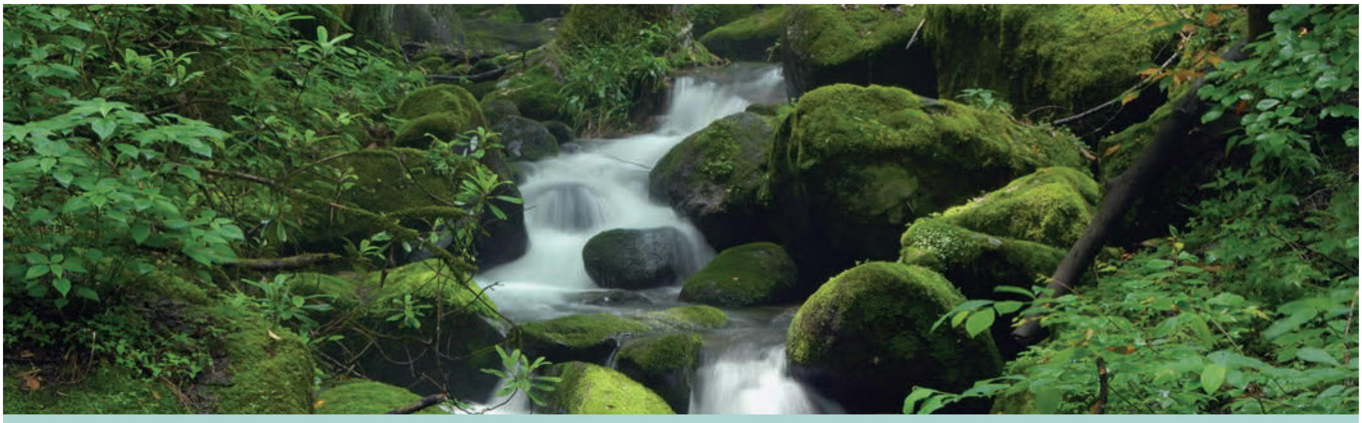

Sallal Water Association Provides EXCEPTIONAL WATER FOR YOU!

We are once again proud to present our annual water quality report covering all testing performed between January 1 and December 31, 2017. Over the years, we have dedicated ourselves to producing drinking water that meets all state and federal standards. We continually strive to adopt new methods for delivering the best quality drinking water to you. As new challenges to drinking water safety emerge, we remain vigilant in meeting the goals of source water protection, water conservation, and community education while continuing to serve the needs of all our water users.

Please remember that we are always available to assist you should you ever have any questions or concerns about your water.

Our water source is groundwater which is pumped from three deep wells maintained by the Association. Over 80 percent of the water required by the Association is produced from two wells located on the Northwestern flank of Rattlesnake Ridge within the City of Seattle watershed. A third well is located near the Edgewick Road interchange, North of Interstate 90; it provides additional water to residences and businesses within this area.

Does the Sallal Water Association add anything to the water? The Association does not add anything to the groundwater. We use no chlorine or fluoride in our water. Parents may wish to inquire with their dentists about supplemental fluoride treatments or fluoride toothpastes.

YOUR VIEWS ARE WELCOMED!

You are invited to participate in our public forum and voice your concerns about your drinking water. We meet the 3rd Tuesday of every month, beginning at 6:00 p.m., at the Sallal Business Office, located at 44021 S.E. Tanner Road, Suite E, North Bend, WA 98045.

Sallal Association Profile

The Sallal Water Association supplies potable water to more than 2,300 connections serving more than 6,000 people throughout our service area, including the Wilderness Rim Association. The system currently supplies approximately 186 million gallons of water each year using three wells to meet the demands of its members.

The Sallal Water Association began as a grassroots effort by local residents in the spring of 1967 due to concerns about the availability of water in shallow wells during summer months. As a result of these efforts, a loan was negotiated from the Federal government in the spring of 1969, and construction began that summer for securing a water supply from the City of Seattle. Sallal was a wholesale customer of Seattle Water from 1970 to 1986, relying on chlorinated surface water from the Masonry Pool portion of Chester Morse reservoir. In 1983 and 1985, two deep wells were drilled inside the Seattle watershed. During 1986, the Sallal water system converted from City of Seattle surface water to groundwater. In 1987, a third well was drilled near the Edgewick Interchange to meet the demands in this portion of the Association's service area.

The Sallal Water Association is a non-profit, consumer-owned corporation, which is administered by a seven-member Board of Trustees, two or three of whom are elected each year. A Water Distribution Manager III, who is Sallal's Water System Superintendant, and in addition another certified water operator, provides maintenance and day-to-day operations of the system. Licensed professional engineers, a professional hydrologist, a rate specialist, an accounting firm, and an attorney provide engineering and consulting services on a contractual basis. A new Operations Manager, Office Manager and part time administrative assistant/accountant manage the Association's North Bend Office at 44021 S.E. Tanner Rd, #E, North Bend, WA 98045.

ATTACHMENT A

WHY PROVIDE A WATER QUALITY REPORT?

The sources of drinking water (both tap water and bottled water) include rivers, lakes, streams, ponds, reservoirs, springs, and wells. As water travels over the surface of the land or through the ground, it dissolves naturally occurring minerals and, in some cases, radioactive material, and can pick up substances resulting from the presence of animals or from human activity.

Contaminants that may be present in source water include:

- Microbial contaminants, such as viruses and bacteria, which may come from sewage treatment plants, septic systems, agricultural livestock operations, and wildlife.
- Inorganic contaminants, such as salts and metals, which can be naturally-occurring or result from urban stormwater runoff, industrial or domestic wastewater discharges, oil and gas production, mining or farming.
- Pesticides and herbicides, which may come from a variety of sources such as agriculture, urban stormwater runoff, and residential uses.
- Organic chemical contaminants, including synthetic and volatile organic chemicals, which are byproducts of industrial processes and petroleum production, and can also come from gas stations, urban stormwater runoff, and septic systems.
- Radioactive contaminants, which can be naturally-occurring or be the result of oil and gas production and mining activities.

In order to ensure that tap water is safe to drink, EPA prescribes regulations which limit the amount of certain contaminants in water provided by public water systems. Food and Drug Administration regulations establish limits for contaminants in bottled water which must provide the same protection for public health.

TAP VS. BOTTLED

Thanks in part to aggressive marketing, the bottled water industry has successfully convinced us all that water purchased in bottles is a healthier alternative to tap water. However, according to a four-year study conducted by the Natural Resources Defense Council, bottled water is not necessarily cleaner or safer than most tap water. In fact, about 25 percent of bottled water is actually just bottled tap water (40 percent according to government estimates) .

The Food and Drug Administration is responsible for regulating bottled water, but these rules allow for less rigorous testing and purity standards than those required by the U.S. EPA for community tap water. For instance, the high mineral content of some bottled waters makes them unsuitable for babies and young children. Further, the FDA completely exempts bottled water that's packaged and sold within the same state, which accounts for about 70 percent of all bottled water sold in the United States.

People spend 10,000 times more per gallon for bottled water than they typically do for tap water. If you get your recommended eight glasses a day from bottled water, you could spend up to $1,400 annually. The same amount of tap water would cost about 49 cents. Even if you installed a filter device on your tap, your annual expenditure would be far less than what you'd pay for bottled water.

For a detailed discussion on the NRDC study results, check out their Web site at www.nrdc.org/waterdrinking/bw/exesum.asp.

SAMPLING RESULTS FOR SALLAL WATER ASSOCIATION 2016

PWS# 91-0848340

During the past year, we have taken numerous water samples in order to determine the presence of any radioactive, biological, inorganic, volatile organic, or synthetic organic contaminants. The tables below show only those contaminants that were detected in the water. The state allows us to monitor for certain substances less often than once a year because the concentrations of these substances do not change frequently. In these cases, the most recent sample data are included, along with the year in which the sample was taken. We have had no sampling violations in the past year in any area of the Sallal Water System.

REGULATED SUBSTANCES

Substance (units of measure)	Year Sampled	MCL [MRDL]	MCLG [MRDLG]	Amount Detected	Range Low - High	Violation?	Typical Source
Nitrate-N [1] (ppm)*	2018	10	10	ND	ND	No	Runoff from fertilizer use; leaching from septic tanks, sewage; erosion of natural deposits
Turbidity[2] (NTU)	2018	TT	NA	<0.5	0.5 - 0.5	No	Soil runoff.

Tap water samples were collected for lead and copper analyses from sample sites throughout the community.

Substance (units of measure)	Year Sampled	AL	MCLG	Amount Detected (90th Percentile)	Sites above AL/ Total Sites	Violation?	Typical Source
Copper (ppm)*	2016	0.02	0.02	0	0/6	No	Corrosion of household plumbing systems; Erosion of natural deposits
Lead (ppb) *	2016	<0.001	0.002	0	0/6	No	

SECONDARY SUBSTANCES

Substance (units of measure)	Year Sampled	SMCL	MCLG	Amount Detected	Range Low - High	Violation?	Typical Source
Manganese (ppb)	2016	50	NA	<0.1	<0.01 - <0.01	No	Leaching from natural deposits
Zinc (ppm)	2016	5	NA	<0.2	<0.2 - <0.2	No	Runoff/leaching from natural deposits; Industrial wastes

[1] Nitrate in drinking water at levels above 10ppm is a risk for infants of less than six months of age. High nitrate levels in drinking water can cause blue baby syndrome. Nitrate levels may rise quickly for short periods of time because of rainfall or agricultural activity. If you are caring for an infant, you should ask advice from your health care provider. Sallal tested for Nitrate in April 2016: the results were ND.

[2] Turbidity is a measure of cloudiness in the water. It is monitored because it is a good indicator of water quality and the effectiveness of disinfectants.

[3] Next test will be in December 2017

***Key to abbreviations used in chart: UNIT DESCRIPTIONS: ppm** (Parts per Million), **ppb** (Parts per Billion), **mg/L** (Milligrams per Liter)

MCLG	Maximum Contaminant Level Goal: The level of a contaminant in drinking water below which there is no known or expected risk to health. MCLGs allow for a margin of safety.
MCL	Maximum Contaminant Level: The highest level of a contaminant that is allowed in drinking water. MCLs are set as close to the MCLGs as feasible using the best available treatment technology.
MRDLG	Maximum Residual Disinfectant Level Goal. The level of a drinking water disinfectant below which there is no known or expected risk to health. MRDLGs do not reflect the benefits of the use of disinfectants to control microbial contaminants.
MRDL	Maximum Residual Disinfectant Level. The highest level of a disinfectant allowed in drinking water. There is convincing evidence that addition of a disinfectant is necessary for control of mivcrobial contaminants (e.g. chlorine, chloramines, chlorine dioxide).
TT	Treatment Technique: A required process intended to reduce the level of a contaminant in drinking water.
AL	Action Level: The concentration of a contaminant which, if exceeded, triggers treatment or other requirements that a water system must follow.
NTU	Turbidity: Turbidity is a measure of the water's cloudiness. It is monitored because it provides a good indicator of the filtration system's effectiveness. Turbidity is measured in NTU's nephelometric turbidity units.
ND	Not detected
EPA	Environmental Protection Agency
CDC	Center for Disease Control & Prevention

MESSAGE FROM THE ENVIRONMENTAL PROTECTION AGENCY (EPA)

Drinking water, including bottled water, may reasonably be expected to contain at least small amounts of some contaminants. The presence of contaminants does not necessarily indicate that water poses a health risk. More information about contaminants and potential health effects can be obtained by calling the EPA's Safe Drinking Water Hotline (1-800-426-4791).

Some people may be more vulnerable to contaminants in drinking water than the general population. Immuno-compromised persons such as persons with cancer undergoing chemotherapy, persons who have undergone organ transplants, people with HIV/AIDS or other immune system disorders, some elderly, and infants can be particularly at risk from infections. These people should seek advice about drinking water from their health care providers. EPA/CDC guidelines on appropriate means to lessen the risk of infection by Cryptosporidium and other microbial contaminants are available from the Safe Drinking Water Hotline (1-800-426-4791).

If present, elevated levels of lead can cause serious health problems, especially for pregnant women and young children. Lead in drinking water is primarily from materials and components associated with service lines and home plumbing. We are responsible for providing high quality drinking water, but cannot control the variety of materials used in plumbing components. When your water has been sitting for several hours, you can minimize the potential for lead exposure by flushing your tap for 30 seconds to 2 minutes before using water for drinking or cooking. If you are concerned about lead in your drinking water, you may wish to have your water tested. Information on lead in drinking water, testing methods, and steps you can take to minimize exposure is available from the Safe Drinking Water Hotline or at http://www.epa.gov/safewater/lead. For more information on tap water quality, please visit www.drinktap.org.

HOW LONG CAN I STORE DRINKING WATER?

The disinfectant in drinking water will eventually dissipate, even in a closed container. If that container housed bacteria prior to filling up with the tap water, the bacteria may continue to grow once the disinfectant has dissipated. Some experts believe that water could be stored up to six months before needing to be replaced. Refrigeration will help slow the bacterial growth.

ATTACHMENT A

SALLAL WATER ASSOCIATION

Water Quality Report

Sallal Water Association | P.O. Box 378 | North Bend, WA 98045

2018

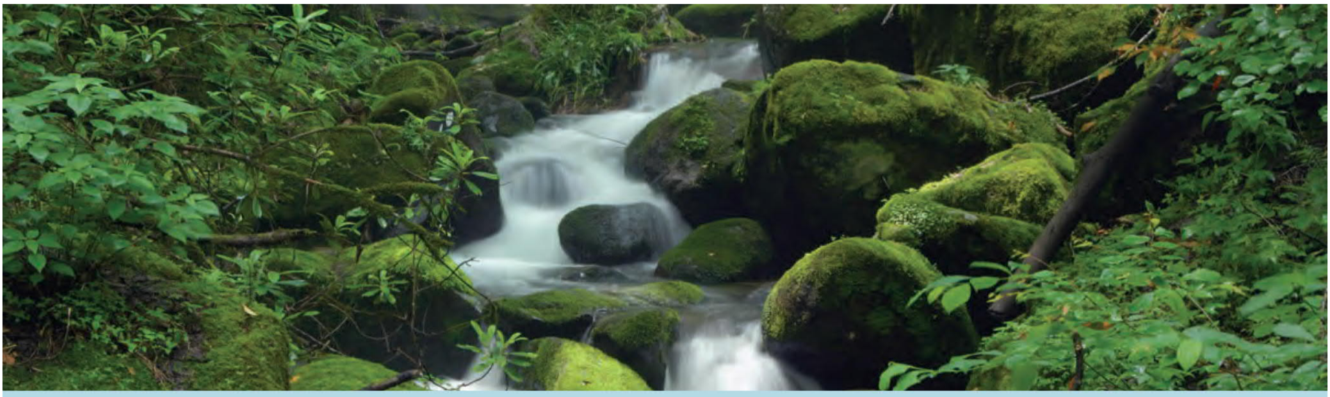

Sallal Water Association Provides EXCEPTIONAL WATER FOR YOU!

We are once again proud to present our annual water quality report covering all testing performed between January 1 and December 31, 2018. Over the years, we have dedicated ourselves to producing drinking water that meets all state and federal standards. We continually strive to adopt new methods for delivering the best quality drinking water to you. As new challenges to drinking water safety emerge, we remain vigilant in meeting the goals of source water protection, water conservation, and community education while continuing to serve the needs of all our water users.

Please remember that we are always available to assist you should you ever have any questions or concerns about your water.

Our water source is groundwater which is pumped from three deep wells maintained by the Association. Over 80 percent of the water required by the Association is produced from two wells located on the Northwestern flank of Rattlesnake Ridge within the City of Seattle watershed. A third well is located near the Edgewick Road interchange, North of Interstate 90; it provides additional water to residences and businesses within this area. These wells are protected from possible contamination through a wellhead protection plan.

Does the Sallal Water Association add anything to the water? The Association does not add any chemicals to this natural pristine water for disinfection or other purposes. We use no chlorine or fluoride in our water. Parents may wish to inquire with their dentists about supplemental fluoride treatments or fluoride toothpastes.

YOUR VIEWS ARE WELCOMED!

You are invited to participate in our public forum and voice your concerns about your drinking water. We meet the 3rd Tuesday of every month, beginning at 6:00 p.m., at the Sallal Business Office, located at 44021 S.E. Tanner Road, Suite E, North Bend, WA 98045.

Sallal Association Profile

The Sallal Water Association supplies potable water to more than 2,300 connections serving more than 6,000 people throughout our service area, including the Wilderness Rim Association. The system currently supplies approximately 186 million gallons of water each year using three wells to meet the demands of its members.

The Sallal Water Association began as a grassroots effort by local residents in the spring of 1967 due to concerns about the availability of water in shallow wells during summer months. As a result of these efforts, a loan was negotiated from the Federal government in the spring of 1969, and construction began that summer for securing a water supply from the City of Seattle. Sallal was a wholesale customer of Seattle Water from 1970 to 1986, relying on chlorinated surface water from the Masonry Pool portion of Chester Morse reservoir. In 1983 and 1985, two deep wells were drilled inside the Seattle watershed. During 1986, the Sallal water system converted from City of Seattle surface water to groundwater. In 1987, a third well was drilled near the Edgewick Interchange to meet the demands in this portion of the Association's service area.

The Sallal Water Association is a non-profit, consumer-owned corporation, which is administered by a seven-member Board of Trustees, two or three of whom are elected each year. A Water Distribution Manager III, who is Sallal's Water System Superintendant, and in addition another certified water operator, provides maintenance and day-to-day operations of the system. Licensed professional engineers, a professional hydrologist, a rate specialist, an accounting firm, and an attorney provide engineering and consulting services on a contractual basis. A General Manager, Office Manager and part time administrative assistant/accountant manage the Association's North Bend Office at 44021 S.E. Tanner Rd, #E, North Bend, WA 98045.

WHY PROVIDE A WATER QUALITY REPORT?

The sources of drinking water (both tap water and bottled water) include rivers, lakes, streams, ponds, reservoirs, springs, and wells. As water travels over the surface of the land or through the ground, it dissolves naturally occurring minerals and, in some cases, radioactive material, and can pick up substances resulting from the presence of animals or from human activity.

Contaminants that may be present in source water include:

- Microbial contaminants, such as viruses and bacteria, which may come from sewage treatment plants, septic systems, agricultural livestock operations, and wildlife.
- Inorganic contaminants, such as salts and metals, which can be naturally-occurring or result from urban stormwater runoff, industrial or domestic wastewater discharges, oil and gas production, mining or farming.
- Pesticides and herbicides, which may come from a variety of sources such as agriculture, urban stormwater runoff, and residential uses.
- Organic chemical contaminants, including synthetic and volatile organic chemicals, which are byproducts of industrial processes and petroleum production, and can also come from gas stations, urban stormwater runoff, and septic systems.
- Radioactive contaminants, which can be naturally-occurring or be the result of oil and gas production and mining activities.

In order to ensure that tap water is safe to drink, EPA prescribes regulations which limit the amount of certain contaminants in water provided by public water systems. Food and Drug Administration regulations establish limits for contaminants in bottled water which must provide the same protection for public health.

TAP VS. BOTTLED

Thanks in part to aggressive marketing, the bottled water industry has successfully convinced us all that water purchased in bottles is a healthier alternative to tap water. However, according to a four-year study conducted by the Natural Resources Defense Council, bottled water is not necessarily cleaner or safer than most tap water. In fact, about 25 percent of bottled water is actually just bottled tap water (40 percent according to government estimates) .

The Food and Drug Administration is responsible for regulating bottled water, but these rules allow for less rigorous testing and purity standards than those required by the U.S. EPA for community tap water. For instance, the high mineral content of some bottled waters makes them unsuitable for babies and young children. Further, the FDA completely exempts bottled water that's packaged and sold within the same state, which accounts for about 70 percent of all bottled water sold in the United States.

People spend 10,000 times more per gallon for bottled water than they typically do for tap water. If you get your recommended eight glasses a day from bottled water, you could spend up to $1,400 annually. The same amount of tap water would cost about 49 cents. Even if you installed a filter device on your tap, your annual expenditure would be far less than what you'd pay for bottled water.

SAMPLING RESULTS FOR SALLAL WATER ASSOCIATION 2018

PWS# 75560

During the past year, we have taken numerous water samples in order to determine the presence of any radioactive, biological, inorganic, volatile organic, or synthetic organic contaminants. The tables below show selected results from our data files. The state allows us to monitor for certain substances less often than once a year because the concentrations of these substances do not change frequently. In these cases, the most recent sample data are included, along with the year in which the sample was taken. Our sampling results have met all compliance requirements in 2018.

SOURCE MONITORING

Substance	Compliance	Level Detected	Unit Measurement	MCLG	MCL
Nitrate + Nitrite	Yes	ND	ppm	10	10
Arsenic	Yes	<0.001	ppm	0	.010
Turbidity	Yes	0.2	NTU	N/A	1.0
Hardness	Yes	40	ppm	N/A	N/A
Sodium	Yes	<5	ppm	N/A	N/A

DISTRIBUTION MONITORING

Substance	Compliance	Level Detected	Unit Measurement	MCLG	MCL
Asbestos (last sampled in 2010)	Yes	<0.001	MFL	N/A	7.0
Lead (2017 samples)	Yes	Range ND - 0.002	ppm	0	AL=.015
Copper (2017 samples)	Yes	Range 0.08 - 0.19	ppm	1.3	AL=1.3

1 Nitrate in drinking water at levels above 10ppm is a risk for infants of less than six months of age. High nitrate levels in drinking water can cause blue baby syndrome. Nitrate levels may rise quickly for short periods of time because of rainfall or agricultural activity. If you are caring for an infant, you should ask advice from your health care provider.

***Key to abbreviations used in chart: UNIT DESCRIPTIONS: ppm** (Parts per Million), **ppb** (Parts per Billion), **mg/L** (Milligrams per Liter)

MCLG	Maximum Contaminant Level Goal: The level of a contaminant in drinking water below which there is no known or expected risk to health. MCLGs allow for a margin of safety.
MCL	Maximum Contaminant Level: The highest level of a contaminant that is allowed in drinking water. MCLs are set as close to the MCLGs as feasible using the best available treatment technology.
MFL	Million Fibers per liter. Samples above seven MFL exceed the EPA maximum contaminant level (MCL) and must be reported.
MRDLG	Maximum Residual Disinfectant Level Goal. The level of a drinking water disinfectant below which there is no known or expected risk to health. MRDLGs do not reflect the benefits of the use of disinfectants to control microbial contaminants.
MRDL	Maximum Residual Disinfectant Level. The highest level of a disinfectant allowed in drinking water. There is convincing evidence that addition of a disinfectant is necessary for control of mivcrobial contaminants (e.g. chlorine, chloramines, chlorine dioxide).
TT	Treatment Technique: A required process intended to reduce the level of a contaminant in drinking water.
AL	Action Level: The concentration of a contaminant which, if exceeded, triggers treatment or other requirements that a water system must follow.
NTU	Turbidity: Turbidity is a measure of the water's cloudiness. It is monitored because it provides a good indicator of the filtration system's effectiveness. Turbidity is measured in NTU's nephelometric turbidity units.
ND	Not detected
EPA	Environmental Protection Agency
CDC	Center for Disease Control & Prevention

MESSAGE FROM THE ENVIRONMENTAL PROTECTION AGENCY (EPA)

Drinking water, including bottled water, may reasonably be expected to contain at least small amounts of some contaminants. The presence of contaminants does not necessarily indicate that water poses a health risk. More information about contaminants and potential health effects can be obtained by calling the EPA's Safe Drinking Water Hotline (1-800-426-4791).

Some people may be more vulnerable to contaminants in drinking water than the general population. Immuno-compromised persons such as persons with cancer undergoing chemotherapy, persons who have undergone organ transplants, people with HIV/AIDS or other immune system disorders, some elderly, and infants can be particularly at risk from infections. These people should seek advice about drinking water from their health care providers. EPA/CDC guidelines on appropriate means to lessen the risk of infection by Cryptosporidium and other microbial contaminants are available from the Safe Drinking Water Hotline (1-800-426-4791).

If present, elevated levels of lead can cause serious health problems, especially for pregnant women and young children. Lead in drinking water is primarily from materials and components associated with service lines and home plumbing. We are responsible for providing high quality drinking water, but cannot control the variety of materials used in plumbing components. When your water has been sitting for several hours, you can minimize the potential for lead exposure by flushing your tap for 30 seconds to 2 minutes before using water for drinking or cooking. If you are concerned about lead in your drinking water, you may wish to have your water tested. Information on lead in drinking water, testing methods, and steps you can take to minimize exposure is available from the Safe Drinking Water Hotline or at http://www.epa.gov/safewater/lead. For more information on tap water quality, please visit www.drinktap.org.

ATTACHMENT A

ATTACHMENT A

WATER MANAGEMENT LABORATORIES INC.

Well #1 — 2017

1515 80th St. E.
Tacoma, WA 98404
(253) 531-3121

#2

INORGANIC CHEMICALS (IOCS) REPORT FOR NITRATES

System ID No: 75560Q

System Name: Sallal Water Association

Lab/Sample No: 08967418

Date Collected: 09-29-17

DOH Source No: S01

Multiple Source Nos: N/A

Sample Type: B

Sample Purpose: C

Date Received: 09-29-17

Date Reported: 09-30-17

Supervisor:

Date Analyzed: 09-29-17

Analyst:

County: King

Group: [✓ A] B Other

Sample Location: Rattlesnake #1, inside tap

Send Report & Bill To: Sallal Water Association
P.O. Box 378
North Bend, WA 98045

Remarks:

DOH#	ANALYTES	RESULTS	UNITS	SRL	TRIGGER	MCL	EXCEEDS		Method/Analyst	
	EPA REGULATED						Trigger?	MCL?		
114	Nitrite - N	NA	mg/l	0.1	0.5	1			300.0	
20	Nitrate - N	<0.2	mg/l	0.2	5.0	10	No	No	300.0	
101	Total Nitrate/Nitrite	NA	mg/l	0.5	5.0	10			300.0	

NOTES:

SRL (State Reporting Level): indicates the minimum reporting level required by the Washington Department of Health (DOH).

Trigger Level: DOH Drinking Water response level. Systems with compounds detected at concentrations in excess of this level are required to take additional samples. Contact your regional DOH office for further information.

MCL (maximum contaminent level): If the contaminent amount exceeds the MCL, immediately contact your regional DOH office.

NA (Not Analyzed): in the results column indicates this compound was not included in the current analysis.

ND (Not Detected): in the results column indicates this compound was analyzed and not detected at a level greater than or equal to the SRL.

< (0.001): indicates the compound was not detected in the sample at or above the concentration indicated.

COMMENTS:

Nitrate

WATER
MANAGEMENT
LABORATORIES INC.

1515 80th St. E.
Tacoma, WA 98404
(253) 531-3121

Well #2 — 2017

*3

INORGANIC CHEMICALS (IOCS) REPORT FOR NITRATES

System ID No: 75560Q
System Name: Sallal Water Association
Lab/Sample No: 0896 7419
Date Collected: 09-29-17
DOH Source No: S02
Multiple Source Nos: N/A
Sample Type: B
Sample Purpose: C
Date Received: 09-29-17
Date Reported: 09-30-17
Supervisor: mB
Date Analyzed: 09-29-17
Analyst: UR
County: King
Group: [✓ A] B Other
Sample Location: Rattlesnake Well Bldg #2 - hosebib
Send Report & Bill To: Sallal Water Association
PO Box 378
North Bend, WA 98045
Remarks:

DOH#	ANALYTES	RESULTS	UNITS	SRL	TRIGGER	MCL	EXCEEDS		Method/Analyst	
EPA REGULATED							Trigger?	MCL?		
114	Nitrite - N	NA	mg/l	0.1	0.5	1			300.0	
20	Nitrate - N	<0.2	mg/l	0.2	5.0	10	No	No	300.0	UR
101	Total Nitrate/Nitrite	NA	mg/l	0.5	5.0	10			300.0	

NOTES:

SRL (State Reporting Level): indicates the minimum reporting level required by the Washington Department of Health (DOH).

Trigger Level: DOH Drinking Water response level. Systems with compounds detected at concentrations in excess of this level are required to take additional samples. Contact your regional DOH office for further information.

MCL (maximum contaminent level): If the contaminent amount exceeds the MCL, immediately contact your regional DOH office.

NA (Not Analyzed): in the results column indicates this compound was not included in the current analysis.

ND (Not Detected): in the results column indicates this compound was analyzed and not detected at a level greater than or equal to the SRL.

< (0.001): indicates the compound was not detected in the sample at or above the concentration indicated.

COMMENTS:

Nitrate

Please Print Plainly

USE HEAVY PEN
DO NOT WRITE IN SHADED AREAS

WATER MANAGEMENT LABORATORIES INC.

1515 80th St. E.
Tacoma, WA 98404
(253) 531-3121

ATTACHMENT A

$+1, 2^2, 3^3$

INORGANIC CHEMICALS (IOCS) REPORT

System ID No: 75560Q
System Name: Sallal Water Association
Lab/Sample No: 08969742
Date Collected: 04-11-18
DOH Source No: S03
Multiple Source Nos: NA
Sample Type: B
Sample Purpose: C
Date Received: 04-11-18
Date Reported: 04.23.18
Supervisor:
County: King
Date Digested: NA
Group: [✓ A] B Other
Sample Location: Well #3 Sample tap
Send Results & Bill To: Sallal Water Assoc.
PO Box 378
North Bend, WA 98045
Remarks:

DOH#	ANALYTES	RESULTS	UNITS	SRL	TRIGGER	MCL	EXCEEDS Trigger?	EXCEEDS MCL?	Method/Analyst	
	EPA REGULATED									
4	Arsenic	0.002	mg/L	0.001	0.01	0.01	NO	NO	200.8	
5	Barium	<0.1	mg/L	0.1	2	2			200.8	
6	Cadmium	<0.001	mg/L	0.001	0.005	0.005			200.8	
7	Chromium	<0.007	mg/L	0.007	0.1	0.1			200.8	
11	Mercury	<0.0002	mg/L	0.0002	0.002	0.002			200.8	
12	Selenium	<0.002	mg/L	0.002	0.05	0.05			200.8	
110	Beryllium	<0.0003	mg/L	0.0003	0.004	0.004			200.8	
112	Antimony	<0.003	mg/L	0.003	0.006	0.006			200.8	
113	Thallium	<0.001	mg/L	0.001	0.002	0.002	↓	↓	200.8	
116	Cyanide	<0.01	mg/L	0.01	0.2	0.2	No	No	4500-CNF	JGH
19	Fluoride	<0.2	mg/L	0.2	2	4	NO	NO	300.0	PO
114	Nitrite - N	< 0.1	mg/L	0.1	0.5	1	NO	No	300.0	PO
20	Nitrate - N	1.0	mg/L	0.2	5	10	NO	NO	300.0	PO
161	Total Nitrate/Nitrite	1.0	mg/L	0.5	5	10	No	No	300.0	JGH
	EPA REGULATED (Secondary)									
8	Iron	<0.1	mg/L	0.1		0.3		NO	3111B	
10	Manganese	<0.01	mg/L	0.01		0.05			200.8	
13	Silver	<0.01	mg/L	0.1		0.1			200.8	
21	Chloride	2	mg/L	20		250			300.0	PO
22	Sulfate	5	mg/L	50		250			300.0	PO
24	Zinc	<0.2	mg/L	0.2		5		↓	200.8	
	STATE REGULATED									
14	Sodium	<5	mg/L	5					200.8	
15	Hardness	68	mg/L	10					2340C	JRC
16	Conductivity	167	umhos/cm	70		700		NO	2510B	JGH
17	Turbidity	<0.1	NTU	0.1					2130B	JGH
18	Color	< 5	color units	15		15		NO	2120B	JGH
26	Total Dissolved Solids	NA	mg/L	100		500		—	2540C	—
111	Nickel	<0.005	mg/L	0.005					200.8	
	STATE UNREGULATED									
9	Lead	<0.001	mg/L	0.001					200.8	
23	Copper	<0.02	mg/L	0.02					200.8	

COMMENTS: FC 28

Please Print Plainly
USE HEAVY PEN
DO NOT WRITE IN SHADED AREAS

WATER MANAGEMENT LABORATORIES INC.

1515 80th St. E.
Tacoma, WA 98404
(253) 531-3121

ATTACHMENT A

& 1,2,^{2} 3^3

INORGANIC CHEMICALS (IOCS) REPORT

2018

S em ID No: 7556OQ	System Name: Sallal Water Association		
Lab/Sample No: 08969741	Date Collected: 04-11-18	DOH Source No: S02	
Multiple Source Nos: NA	Sample Type: B	Sample Purpose: C	
Date Received: 04-11-18	Date Reported: 04.24.18	Supervisor:	
County: King	Date Digested: NA	Group: [✓ A] B Other	
Sample Location: Sample tap at wellhouse			
Send Results & Bill To: Sallal Water Association PO Box 378 NorthBend, WA 98045	Remarks:		

DOH#	ANALYTES	RESULTS	UNITS	SRL	TRIGGER	MCL	EXCEEDS Trigger?	EXCEEDS MCL?	Method/Analyst	
	EPA REGULATED									
4	Arsenic	<0.001	mg/L	0.001	0.01	0.01	NO	NO	200.8	
5	Barium	<0.1	mg/L	0.1	2	2			200.8	
6	Cadmium	<0.001	mg/L	0.001	0.005	0.005			200.8	
7	Chromium	<0.007	mg/L	0.007	0.1	0.1			200.8	
11	Mercury	<0.0002	mg/L	0.0002	0.002	0.002			200.8	
12	Selenium	<0.002	mg/L	0.002	0.05	0.05			200.8	
110	Beryllium	<0.0003	mg/L	0.0003	0.004	0.004			200.8	
112	Antimony	<0.003	mg/L	0.003	0.006	0.006			200.8	
	Thallium	<0.001	mg/L	0.001	0.002	0.002			200.8	
116	Cyanide	<0.01	mg/L	0.01	0.2	0.2			4500-CNF	JGH
19	Fluoride	<0.20	mg/L	0.2	2	4			300.0	PO
114	Nitrite - N	<0.1	mg/L	0.1	0.5	1			300.0	PO
20	Nitrate - N	0.3	mg/L	0.2	5	10			300.0	PO
161	Total Nitrate/Nitrite	<0.4	mg/L	0.5	5	10	↓	↓	300.0	JGH
	EPA REGULATED (Secondary)									
8	Iron	<0.1	mg/L	0.1		0.3		NO	3111B	
10	Manganese	<0.01	mg/L	0.01		0.05			200.8	
13	Silver	<0.01	mg/L	0.1		0.1			200.8	
21	Chloride	1	mg/L	20		250			300.0	PO
22	Sulfate	3	mg/L	50		250			300.0	PO
24	Zinc	<0.2	mg/L	0.2		5		↓	200.8	
	STATE REGULATED									
14	Sodium	<5	mg/L	5					200.8	
15	Hardness	40	mg/L	10					2340C	JRC
16	Conductivity	83	umhos/cm	70		700		NO	2510B	JGH
17	Turbidity	0.2	NTU	0.1					2130B	JGH
18	Color	<5	color units	15		15		NO	2120B	JGH
26	Total Dissolved Solids	NA	mg/L	100		500		—	2540C	—
111	Nickel	<0.005	mg/L	0.005					200.8	
	STATE UNREGULATED									
9	Lead	<0.001	mg/L	0.001					200.8	
	Copper	<0.02	mg/L	0.02					200.8	

COMMENTS: Full Chem 28

ATTACHMENT A

WATER MANAGEMENT LABORATORIES INC. Well #1 - 2016

1515 80th St. E.
Tacoma, WA 98404
(253) 531-3121

★ 2^3

INORGANIC CHEMICALS (IOCS) REPORT FOR NITRATES

System ID No: 75560Q | System Name: Sallal Water Association

Lab/Sample No: 08963126 | Date Collected: 09-28-16 | DOH Source No: S01

Multiple Source Nos: N/A | Sample Type: B | Sample Purpose: C

Date Received: 09-28-16 | Date Reported: 09-30-16 | Supervisor: LM

Date Analyzed: 09-29-16 | Analyst: RC

County: King | Group: [✓ A] B Other

Sample Location: RattleSnake Well #1

Send Report & Bill To: Sallal Water Association
PO Box 378
North Bend, WA 98045

Remarks:

DOH#	ANALYTES	RESULTS	UNITS	SRL	TRIGGER	MCL	EXCEEDS		Method/Analyst	
EPA REGULATED							Trigger?	MCL?		
114	Nitrite - N	NA	mg/l	0.1	0.5	1			300.0	
[illegible]	Nitrate - N	<0.2	mg/l	0.2	5.0	10	NO	NO	300.0	RC
161	Total Nitrate/Nitrite	NA	mg/l	0.5	5.0	10			300.0	

NOTES:

SRL (State Reporting Level): indicates the minimum reporting level required by the Washington Department of Health (DOH).

Trigger Level: DOH Drinking Water response level. Systems with compounds detected at concentrations in excess of this level are required to take additional samples. Contact your regional DOH office for further information.

MCL (maximum contaminent level): If the contaminent amount exceeds the MCL, immediately contact your regional DOH office.

NA (Not Analyzed): in the results column indicates this compound was not included in the current analysis.

ND (Not Detected): in the results column indicates this compound was analyzed and not detected at a level greater than or equal to the SRL.

< (0.001): indicates the compound was not detected in the sample at or above the concentration indicated.

COMMENTS:

Nitrate

WATER
MANAGEMENT
LABORATORIES INC. Well #2 – 2016

1515 80th St. E.
Tacoma, WA 98404
(253) 531-3121

#2^3

INORGANIC CHEMICALS (IOCS) REPORT FOR NITRATES

System ID No: 75560Q
System Name: Sallal Water Association
Lab/Sample No: 08963127
Date Collected: 09-28-16
DOH Source No: S02
Multiple Source Nos: N/A
Sample Type: B
Sample Purpose: C
Date Received: 09-28-16
Date Reported: 09-30-16
Supervisor: LK
Date Analyzed: 09-29-16
Analyst: RE
County: King
Group: [✓ A] B Other
Sample Location: Rattlesnake Well #2
Send Report & Bill To: Sallal Water Association
PO Box 378
North Bend, WA 98045
Remarks:

DOH#	ANALYTES	RESULTS	UNITS	SRL	TRIGGER	MCL	EXCEEDS		Method/Analyst	
EPA REGULATED							Trigger?	MCL?		
114	Nitrite - N	NA	mg/l	0.1	0.5	1			300.0	
[illegible]	Nitrate - N	<0.2	mg/l	0.2	5.0	10	NO	NO	300.0	RE
161	Total Nitrate/Nitrite	NA	mg/l	0.5	5.0	10			300.0	

NOTES:

SRL (State Reporting Level): indicates the minimum reporting level required by the Washington Department of Health (DOH).

Trigger Level: DOH Drinking Water response level. Systems with compounds detected at concentrations in excess of this level are required to take additional samples. Contact your regional DOH office for further information.

MCL (maximum contaminent level): If the contaminent amount exceeds the MCL, immediately contact your regional DOH office.

NA (Not Analyzed): in the results column indicates this compound was not included in the current analysis.

ND (Not Detected): in the results column indicates this compound was analyzed and not detected at a level greater than or equal to the SRL.

< (0.001): indicates the compound was not detected in the sample at or above the concentration indicated.

COMMENTS:

Nitrate

ATTACHMENT A

WATER MANAGEMENT LABORATORIES INC. Well #3 – 2016

1515 80th St. E.
Tacoma, WA 98404
(253) 531-3121

+23

INORGANIC CHEMICALS (IOCS) REPORT FOR NITRATES

System ID No: 75560Q	System Name: Sallal Water Association	
Lab/Sample No: 08963128	Date Collected: 09-28-16	DOH Source No: S03
Multiple Source Nos: NA	Sample Type: B	Sample Purpose: C
Date Received: 09-28-16	Date Reported: 09-30-16	Supervisor: LM
	Date Analyzed: 09-29-16	Analyst: RC
County: King		Group: [✓ A] B Other
Sample Location: Edgewick Well 3 - Well Building inside hosebib		
Send Report & Bill To: Sallal Water Association PO Box 378 North Bend, WA 98045		Remarks:

DOH#	ANALYTES	RESULTS	UNITS	SRL	TRIGGER	MCL	EXCEEDS		Method/Analyst	
EPA REGULATED							Trigger?	MCL?		
114	Nitrite - N	NA	mg/l	0.1	0.5	1			300.0	
	Nitrate - N	0.8	mg/l	0.2	5.0	10	NO	NO	300.0	RC
161	Total Nitrate/Nitrite	NA	mg/l	0.5	5.0	10			300.0	

NOTES:

SRL (State Reporting Level): indicates the minimum reporting level required by the Washington Department of Health (DOH).

Trigger Level: DOH Drinking Water response level. Systems with compounds detected at concentrations in excess of this level are required to take additional samples. Contact your regional DOH office for further information.

MCL (maximum contaminent level): If the contaminent amount exceeds the MCL, immediately contact your regional DOH office.

NA (Not Analyzed): in the results column indicates this compound was not included in the current analysis.

ND (Not Detected): in the results column indicates this compound was analyzed and not detected at a level greater than or equal to the SRL.

< (0.001): indicates the compound was not detected in the sample at or above the concentration indicated.

COMMENTS:

Nitrate

ATTACHMENT A

WATER MANAGEMENT LABORATORIES INC.

Well #1 - 2017

1515 80th St. E.
Tacoma, WA 98404
(253) 531-3121

#2 3

INORGANIC CHEMICALS (IOCS) REPORT FOR NITRATES

System ID No: 75560Q
System Name: Sallal Water Association
Lab/Sample No: 08967418
Date Collected: 09-29-17
DOH Source No: S01
Multiple Source Nos: N/A
Sample Type: B
Sample Purpose: C
Date Received: 09-29-17
Date Reported: 09-30-17
Supervisor:
Date Analyzed: 09-29-17
Analyst:
County: King
Group: [✓ A] B Other
Sample Location: Rattlesnake #1, inside tap
Send Report & Bill To: Sallal Water Association
P.O. Box 378
North Bend, WA 98045
Remarks:

DOH#	ANALYTES	RESULTS	UNITS	SRL	TRIGGER	MCL	EXCEEDS		Method/Analyst	
EPA REGULATED							Trigger?	MCL?		
114	Nitrite - N	NA	mg/l	0.1	0.5	1			300.0	
20	Nitrate - N	<0.2	mg/l	0.2	5.0	10	No	No	300.0	
101	Total Nitrate/Nitrite	NA	mg/l	0.5	5.0	10			300.0	

NOTES:

SRL (State Reporting Level): indicates the minimum reporting level required by the Washington Department of Health (DOH).

Trigger Level: DOH Drinking Water response level. Systems with compounds detected at concentrations in excess of this level are required to take additional samples. Contact your regional DOH office for further information.

MCL (maximum contaminent level): If the contaminent amount exceeds the MCL, immediately contact your regional DOH office.

NA (Not Analyzed): in the results column indicates this compound was not included in the current analysis.

ND (Not Detected): in the results column indicates this compound was analyzed and not detected at a level greater than or equal to the SRL.

< (0.001): indicates the compound was not detected in the sample at or above the concentration indicated.

COMMENTS:

Nitrate

ATTACHMENT A

WATER
MANAGEMENT
LABORATORIES INC.

Well #2 — 2017

1515 80th St. E.
Tacoma, WA 98404
(253) 531-3121

*3

INORGANIC CHEMICALS (IOCS) REPORT FOR NITRATES

System ID No: 75560Q
System Name: Sallal Water Association
Lab/Sample No: 08967419
Date Collected: 09-29-17
DOH Source No: S02
Multiple Source Nos: N/A
Sample Type: B
Sample Purpose: C
Date Received: 09-29-17
Date Reported: 09-30-17
Supervisor: mB
Date Analyzed: 09-29-17
Analyst: UK
County: King
Group: [✓ A] B Other
Sample Location: Rattlesnake Well Bldg #2 - hosebib
Send Report & Bill To: Sallal Water Association
PO Box 378
North Bend, WA 98045
Remarks:

DOH#	ANALYTES	RESULTS	UNITS	SRL	TRIGGER	MCL	EXCEEDS		Method/Analyst	
EPA REGULATED							Trigger?	MCL?		
114	Nitrite - N	NA	mg/l	0.1	0.5	1			300.0	
20	Nitrate - N	<0.2	mg/l	0.2	5.0	10	No	No	300.0	UK
101	Total Nitrate/Nitrite	NA	mg/l	0.5	5.0	10			300.0	

NOTES:

SRL (State Reporting Level): indicates the minimum reporting level required by the Washington Department of Health (DOH).

Trigger Level: DOH Drinking Water response level. Systems with compounds detected at concentrations in excess of this level are required to take additional samples. Contact your regional DOH office for further information.

MCL (maximum contaminent level): If the contaminent amount exceeds the MCL, immediately contact your regional DOH office.

NA (Not Analyzed): in the results column indicates this compound was not included in the current analysis.

ND (Not Detected): in the results column indicates this compound was analyzed and not detected at a level greater than or equal to the SRL.

< (0.001): indicates the compound was not detected in the sample at or above the concentration indicated.

COMMENTS:

Nitrate

ATTACHMENT A

WATER
MANAGEMENT
LABORATORIES INC. Well #3 — 2017

1515 80th St. E.
Tacoma, WA 98404
(253) 531-3121

+23

INORGANIC CHEMICALS (IOCS) REPORT FOR NITRATES

System ID No: 75560Q
System Name: Sallal Water Association
Lab/Sample No: 08967420
Date Collected: 09-29-17
DOH Source No: S03
Multiple Source Nos: N/A
Sample Type: B
Sample Purpose: C
Date Received: 09-29-17
Date Reported: 09-30-17
Supervisor:
Date Analyzed: 09-29-17
Analyst: UK
County: King
Group: [✓ A] B Other
Sample Location: Edgewick Well #3 - Wellhouse hosebib
Send Report & Bill To: Sallal Water Association
P.O. Box 378
North Bend, WA 98045
Remarks:

DOH#	ANALYTES	RESULTS	UNITS	SRL	TRIGGER	MCL	EXCEEDS		Method/Analyst	
EPA REGULATED							Trigger?	MCL?		
114	Nitrite - N	NA	mg/l	0.1	0.5	1			300.0	
20	Nitrate - N	1.0	mg/l	0.2	5.0	10	No	No	300.0	UK
101	Total Nitrate/Nitrite	NA	mg/l	0.5	5.0	10			300.0	

NOTES:

SRL (State Reporting Level): indicates the minimum reporting level required by the Washington Department of Health (DOH).

Trigger Level: DOH Drinking Water response level. Systems with compounds detected at concentrations in excess of this level are required to take additional samples. Contact your regional DOH office for further information.

MCL (maximum contaminent level): If the contaminent amount exceeds the MCL, immediately contact your regional DOH office.

NA (Not Analyzed): in the results column indicates this compound was not included in the current analysis.

ND (Not Detected): in the results column indicates this compound was analyzed and not detected at a level greater than or equal to the SRL.

< (0.001): indicates the compound was not detected in the sample at or above the concentration indicated.

COMMENTS:

Nitrate

Please Print Plainly
USE HEAVY PEN
DO NOT WRITE IN SHADED AREAS

WATER MANAGEMENT LABORATORIES INC.

1515 80th St. E.
Tacoma, WA 98404
(253) 531-3121

ATTACHMENT A

X 1,2,3

2018

INORGANIC CHEMICALS (IOCS) REPORT

System ID No: 75560Q
System Name: Sallal Water Association
Lab/Sample No: 08969741
Date Collected: 04-11-18
DOH Source No: S02
Multiple Source Nos: NA
Sample Type: B
Sample Purpose: C
Date Received: 04-11-18
Date Reported: 04·24·18
Supervisor:
County: King
Date Digested: NA
Group: [✓ A] B Other
Sample Location: Sample tap at wellhouse
Send Results & Bill To: Sallal Water Association
PO Box 378
NorthBend, WA 98045
Remarks: WELL 2

DOH#	ANALYTES	RESULTS	UNITS	SRL	TRIGGER	MCL	EXCEEDS Trigger?	EXCEEDS MCL?	Method/Analyst
	EPA REGULATED								
4	Arsenic	<0.001	mg/L	0.001	0.01	0.01	NO	NO	200.8
5	Barium	<0.1	mg/L	0.1	2	2			200.8
6	Cadmium	<0.001	mg/L	0.001	0.005	0.005			200.8
7	Chromium	<0.007	mg/L	0.007	0.1	0.1			200.8
11	Mercury	<0.0002	mg/L	0.0002	0.002	0.002			200.8
12	Selenium	<0.002	mg/L	0.002	0.05	0.05			200.8
110	Beryllium	<0.0003	mg/L	0.0003	0.004	0.004			200.8
112	Antimony	<0.003	mg/L	0.003	0.006	0.006			200.8
113	Thallium	<0.001	mg/L	0.001	0.002	0.002			200.8
116	Cyanide	<0.01	mg/L	0.01	0.2	0.2			4500-CNF JGH
19	Fluoride	<0.20	mg/L	0.2	2	4			300.0 PO
114	Nitrite - N	<0.1	mg/L	0.1	0.5	1			300.0 PO
20	Nitrate - N	0.3	mg/L	0.2	5	10			300.0 PO
161	Total Nitrate/Nitrite	<0.4	mg/L	0.5	5	10			300.0 JGH
	EPA REGULATED (Secondary)								
8	Iron	<0.1	mg/L	0.1		0.3		NO	3111B
10	Manganese	<0.01	mg/L	0.01		0.05			200.8
13	Silver	<0.01	mg/L	0.1		0.1			200.8
21	Chloride	1	mg/L	20		250			300.0 PO
22	Sulfate	3	mg/L	50		250			300.0 PO
24	Zinc	<0.2	mg/L	0.2		5			200.8
	STATE REGULATED								
14	Sodium	<5	mg/L	5					200.8
15	Hardness	40	mg/L	10					2340C JRC
16	Conductivity	83	umhos/cm	70		700		NO	2510B JGH
17	Turbidity	0.2	NTU	0.1					2130B JGH
18	Color	<5	color units	15		15		NO	2120B JGH
26	Total Dissolved Solids	NA	mg/L	100		500		—	2540C —
111	Nickel	<0.005	mg/L	0.005					200.8
	STATE UNREGULATED								
9	Lead	<0.001	mg/L	0.001					200.8
23	Copper	<0.02	mg/L	0.02					200.8

COMMENTS: Full Chem 28

Please Print Plainly

USE HEAVY PEN
DO NOT WRITE IN SHADED AREAS

WATER MANAGEMENT LABORATORIES INC.

1515 80th St. E.
Tacoma, WA 98404
(253) 531-3121

ATTACHMENT A

2018

11, 2^2, 3^3

INORGANIC CHEMICALS (IOCS) REPORT

System ID No: 75560Q

System Name: Sallal Water Association

Lab/Sample No: 08969742

Date Collected: 04-11-18

DOH Source No: S03

Multiple Source Nos: N/A

Sample Type: B

Sample Purpose: C

Date Received: 04-11-18

Date Reported: 04.23.18

Supervisor:

County: King

Date Digested: NA

Group: [✓ A] B Other

Sample Location: Well #3 Sample tap

Send Results & Bill To: Sallal Water Assoc.
PO Box 378
North Bend, WA 98045

Remarks:

DOH#	ANALYTES	RESULTS	UNITS	SRL	TRIGGER	MCL	EXCEEDS		Method/Analyst	
							Trigger?	MCL?		
	EPA REGULATED									
4	Arsenic	0.002	mg/L	0.001	0.01	0.01	NO	NO	200.8	
5	Barium	<0.1	mg/L	0.1	2	2			200.8	
6	Cadmium	<0.001	mg/L	0.001	0.005	0.005			200.8	
7	Chromium	<0.007	mg/L	0.007	0.1	0.1			200.8	
11	Mercury	<0.0002	mg/L	0.0002	0.002	0.002			200.8	
12	Selenium	<0.002	mg/L	0.002	0.05	0.05			200.8	
110	Beryllium	<0.0003	mg/L	0.0003	0.004	0.004			200.8	
112	Antimony	<0.003	mg/L	0.003	0.006	0.006			200.8	
113	Thallium	<0.001	mg/L	0.001	0.002	0.002	↓	↓	200.8	
116	Cyanide	<0.01	mg/L	0.01	0.2	0.2	No	No	4500-CNF	JGH
19	Fluoride	<0.2	mg/L	0.2	2	4	NO	NO	300.0	PO
114	Nitrite - N	<0.1	mg/L	0.1	0.5	1	NO	NO	300.0	PO
20	Nitrate - N	1.0	mg/L	0.2	5	10	NO	NO	300.0	PO
161	Total Nitrate/Nitrite	1.0	mg/L	0.5	5	10	No	No	300.0	JGH
	EPA REGULATED (Secondary)									
8	Iron	<0.1	mg/L	0.1		0.3		NO	3111B	
10	Manganese	<0.01	mg/L	0.01		0.05			200.8	
13	Silver	<0.01	mg/L	0.1		0.1			200.8	
21	Chloride	2	mg/L	20		250			300.0	PO
22	Sulfate	5	mg/L	50		250			300.0	PO
24	Zinc	<0.2	mg/L	0.2		5		↓	200.8	
	STATE REGULATED									
14	Sodium	<5	mg/L	5					200.8	
15	Hardness	88	mg/L	10					2340C	JRC
16	Conductivity	167	umhos/cm	70		700		NO	2510B	JGH
17	Turbidity	<0.1	NTU	0.1					2130B	JGH
18	Color	< 5	color units	15		15		NO	2120B	JGH
26	Total Dissolved Solids	N/A	mg/L	100		500		—	2540C	—
111	Nickel	<0.005	mg/L	0.005					200.8	
	STATE UNREGULATED									
9	Lead	<0.001	mg/L	0.001					200.8	
23	Copper	<0.02	mg/L	0.02					200.8	

COMMENTS: FC 28

WATER
MANAGEMENT
LABORATORIES INC. 2014

1515 80th St. E.
Tacoma, WA 98404
(253) 531-3121

July-2014

ATTACHMENT A

INORGANIC CHEMICALS (IOC's) REPORT For LEAD & COPPER

System ID No.: 75560Q	System Name: Sallal Water Association	
DOH Source No: S93 (LCR)	Sample Type: B	Sample Purpose: C
Date Received: 07-25-14	Date Reported: 07-30-14	Supervisor:
Date Analyzed: 07-29-14	Analyst: KT	Group: A
County: King		Sample Location: (see table below)

Send To:
Sallal Water Association
PO Box 378
North Bend, WA 98045

Bill To:

DOH #	23 (Copper)	9 (Lead)
State Reporting Level (SRL)	0.02 mg/L	0.001 mg/L
Action Level (AL)	1.3 mg/L	0.015 mg/L
Test Method	200.8	200.8

Lab Sample No.	Date Collected	Site/Location	Copper (mg/L)	Lead (mg/L)
08953020	07-16-14	44128 SE Mt Si Road	0.03	<0.001
08953021	07-17-14	12614 470th Ave SE	0.09	<0.001
08953022	07-18-14	12003 434th Ave SE	0.12	<0.001
08953023	07-22-14	44021 SE Tanner Road Ste A	0.28	0.001
08953024	07-21-14	44408 SE 130th Street	0.43	0.004
08953025	07-17-14	43118 SE 134th Court	0.10	0.001
08953026	07-18-14	44323 SE 166th Street	0.04	<0.001
08953027	07-23-14	46008 SE 130th Place	0.07	<0.001
08953028	07-22-14	14204 439th Avenue SE	0.06	<0.001
08953029	07-24-14	14210 440th Court SE	0.22	<0.001
08953030	07-22-14	14228 439th Avenue SE	0.15	<0.001
08953031	07-25-14	44035 SE 143rd Street	0.14	0.001
08953032	07-18-14	43410 SE 152nd Place	0.26	<0.001
08953033	07-24-14	43926 SE 143rd Street	0.22	0.001
08953034	07-23-14	13214 432nd Avenue SE	0.17	0.001

NOTES:

1mg/L is equivalent to 1 ppM

AL (Federal Action Levels): are 0.015 mg/L for Lead and 1.3 mg/L for Copper. If the concentrations exceed these levels, contact your regional DOH office for further information.

SRL (State Reporting Level): Indicates the minimum reporting level required by the Washington Department of Health (DOH).

NA (Not Analyzed): In the RESULTS column indicates this compound was not included in the current analysis.

ND (Not Detected): In the RESULTS column indicates this compound was analyzed and not detected at a level greater than or equal to the SRL.

< : Indicates less than.

Comments: **08953211**
Lead & Copper

ATTACHMENT A

WATER MANAGEMENT LABORATORIES INC.

1515 80th St. E.
Tacoma, WA 98404
(253) 531-3121

INORGANIC CHEMICALS (IOC's) REPORT For LEAD & COPPER

System ID No.: 75560Q	System Name: Sallal Water Association	
DOH Source No: S93 (LCR)	Sample Type: B	Sample Purpose: C
Date Received: 07-25-14	Date Reported: 07-30-14	Supervisor:
Date Analyzed: 07-29-14	Analyst: KT	Group: A
County: King		Sample Location: (see table below)
Send To: Sallal Water Association PO Box 378 North Bend, WA 98045	Bill To:	

DOH #	23 (Copper)	9 (Lead)
State Reporting Level (SRL)	0.02 mg/L	0.001 mg/L
Action Level (AL)	1.3 mg/L	0.015 mg/L
Test Method	200.8	200.8

Lab Sample No.	Date Collected	Site/Location	Copper (mg/L)	Lead (mg/L)
08953035	07-22-14	43520 SE North Bend Way	0.04	<0.001
08953036	07-23-14	45710 SE North Bend Way	<0.02	0.001
08953037	07-23-14	14221 442nd Avenue SE	0.31	<0.001
08953038	07-25-14	43306 SE 140th Street	<0.02	<0.001
08953039	07-25-14	45035 SE 166th Street	0.14	<0.001

NOTES:

1mg/L is equivalent to 1 ppM

AL (Federal Action Levels): are 0.015 mg/L for Lead and 1.3 mg/L for Copper. If the concentrations exceed these levels, contact your regional DOH office for further information.

SRL (State Reporting Level): Indicates the minimum reporting level required by the Washington Department of Health (DOH).

NA (Not Analyzed): In the RESULTS column indicates this compound was not included in the current analysis.

ND (Not Detected): In the RESULTS column indicates this compound was analyzed and not detected at a level greater than or equal to the SRL.

< : Indicates less than.

Comments: **08953211**
Lead & Copper
Pg 2 of 2

ATTACHMENT A

WATER MANAGEMENT LABORATORIES INC.

1515 80th St. E.
Tacoma, WA 98404
(253) 531-3121

2017

INORGANIC CHEMICALS (IOC's) REPORT For LEAD & COPPER

System ID No.: 75560Q	System Name: Sallal Water Association	
DOH Source No: S93 (LCR)	Sample Type: B	Sample Purpose: C
Date Received: 07-25-17	Date Reported: 08-01-17	Supervisor:
Date Analyzed: 07-31-17	Analyst: JMB	Group: A
County: King		Sample Location: (see table below)
Send To: Sallal Water Association PO Box 378 North Bend, WA 98045	Bill To:	

DOH #	23 (Copper)	9 (Lead)
State Reporting Level (SRL)	0.02 mg/L	0.001 mg/L
Action Level (AL)	1.3 mg/L	0.015 mg/L *
Test Method	200.8	200.8

Lab Sample No.	Date Collected	Site/Location	Copper (mg/L)	Lead (mg/L)
08962684	07-18-17	43520 SE N. B Way	0.04	<0.001
08962685	07-18-17	45053 SE 166th Street	0.67	<0.001
08962686	07-19-17	14221 442nd Avenue SE	0.16	<0.001
08962687	07-18-17	44128 SE Mt. Si Road	<0.02	<0.001
08962688	07-18-17	43118 SE 134th Court	0.16	0.002
08962689	07-17-17	44021 SE Tanner Road - Suite A	0.27	<0.001
08962690	07-21-17	44408 SE 130th Street	0.08	0.001
08962691	07-24-17	12614 470th Avenue SE	0.08	<0.001
08962692	07-24-17	14228 439th Avenue SE	0.21	<0.001
08962693	07-23-17	44323 SE 166th Street	0.12	<0.001
08962694	07-24-17	44035 SE 143rd Street	0.27	0.002.
08962695	07-20-17	14210 440th Court SE	0.10	<0.001
08962696	07-25-17	43410 SE 152nd Place	0.23	<0.001
08962697	07-25-17	13214 432nd Avenue SE	0.16	0.002
08962698	07-25-17	43306 SE 140th Street	<0.02	<0.001

*** SCHOOLS (250 mL samples) the Action Level (AL) for Lead is 0.020 mg/L**

NOTES:

1mg/L is equivalent to 1 ppM

AL (Federal Action Levels): are 0.015 mg/L for Lead and 1.3 mg/L for Copper. If the concentrations exceed these levels, contact your regional DOH office for further information.

SRL (State Reporting Level): Indicates the minimum reporting level required by the Washington Department of Health (DOH).

NA (Not Analyzed): In the RESULTS column indicates this compound was not included in the current analysis.

< : Indicates less than.

Comments: **08966395**
Lead and Copper
Page 1 of 2

ATTACHMENT A

INORGANIC CHEMICALS (IOC's) REPORT For LEAD & COPPER

System ID No.: 75560Q	System Name: Sallal Water Association	
DOH Source No: S93 (LCR)	Sample Type: B	Sample Purpose: C
Date Received: 07-25-17	Date Reported: 08-01-17	Supervisor:
Date Analyzed: 07-31-17	Analyst: JMB	Group: A
County: King		Sample Location: (see table below)

Send To: Sallal Water Association PO Box 378 North Bend, WA 98045	Bill To:

DOH #	23 (Copper)	9 (Lead)
State Reporting Level (SRL)	0.02 mg/L	0.001 mg/L
Action Level (AL)	1.3 mg/L	0.015 mg/L *
Test Method	200.8	200.8

Lab Sample No.	Date Collected	Site/Location	Copper (mg/L)	Lead (mg/L)
08962699	07-25-17	14204 439th Avenue SE	0.12	<0.001
08962700	07-25-17	45710 SE N. B Way	<0.02	<0.001
08962701	07-25-17	12003 434th Avenue SE	0.18	<0.001
08962702	07-25-17	46008 SE 130th Place	0.16	<0.001
08962703	07-25-17	43926 SE 143rd Street	0.23	0.001

*** SCHOOLS (250 mL samples) the Action Level (AL) for Lead is 0.020 mg/L**

Comments: **08966395**
Lead & Copper
Page 2 of 2

ATTACHMENT A

WATER
MANAGEMENT
LABORATORIES INC.

1515 80th St. E.
Tacoma, WA 98404
(253) 531-3121

Well #1 – 2018

VOLATILE ORGANIC CHEMICALS (VOC's) ANALYSIS REPORT
EPA TEST METHOD - EPA 524.2
WA DOH TEST PANEL: VOC1

System ID No.: 75560Q
System Name: Sallal Water Association
Lab / Sample No.: 08977643
Date Collected: 04-11-18
DOH Source No.: S01
Multiple Source Nos.: N/A
Sample Type: B
Sample Purpose: C
Date Received: 04-11-18
Date Analyzed: 04-14-18
Analyst: JGH
Date Reported: 04-17-18
Supervisor:
County: King
Group: A
Sample Location: Sample Tap at Wellhead

Send To: Sallal Water Association
PO Box 378
North Bend, WA 98045

Remarks:

DOH #	ANALYTES	RESULTS	UNITS	SRL	TRIGGER	MCL	EXCEEDS	
		EPA REGULATED					Trigger?	MCL?
45	Vinyl Chloride	ND	ug/L	0.5	0.5	2	NO	NO
46	1,1 - Dichloroethylene	ND	ug/L	0.5	0.5	7	NO	NO
47	1,1,1 - Trichloroethane	ND	ug/L	0.5	0.5	200	NO	NO
48	Carbon Tetrachloride	ND	ug/L	0.5	0.5	5	NO	NO
49	Benzene	ND	ug/L	0.5	0.5	5	NO	NO
50	1,2 - Dichloroethane	ND	ug/L	0.5	0.5	5	NO	NO
51	Trichloroethylene	ND	ug/L	0.5	0.5	5	NO	NO
52	1,4 - Dichlorobenzene	ND	ug/L	0.5	0.5	75	NO	NO
56	Dichloromethane	ND	ug/L	0.5	0.5	5	NO	NO
57	trans-1,2 - Dichloroethylene	ND	ug/L	0.5	0.5	100	NO	NO
60	cis-1,2 - Dichloroethylene	ND	ug/L	0.5	0.5	70	NO	NO
63	1,2 - Dichloropropane	ND	ug/L	0.5	0.5	5	NO	NO
66	Toluene	ND	ug/L	0.5	0.5	1000	NO	NO
67	1,1,2 - Trichloroethane	ND	ug/L	0.5	0.5	5	NO	NO
68	Tetrachloroethylene	ND	ug/L	0.5	0.5	5	NO	NO
71	Chlorobenzene	ND	ug/L	0.5	0.5	100	NO	NO
73	Ethylbenzene	ND	ug/L	0.5	0.5	700	NO	NO
76	Styrene	ND	ug/L	0.5	0.5	100	NO	NO
84	1,2 - Dichlorobenzene	ND	ug/L	0.5	0.5	600	NO	NO
95	1,2,4 - Trichlorobenzene	ND	ug/L	0.5	0.5	70	NO	NO
160	Total Xylenes	ND	ug/L	0.5	0.5	10000	NO	NO
74	m/p Xylenes (MCL for Total)	ND	ug/L	0.5	0.5		NO	
75	o - Xylene (MCL for Total)	ND	ug/L	0.5	0.5		NO	
		TRIHALOMETHANES						
27	Chloroform	ND	ug/L	0.5	0.5		NO	
28	Bromodichloromethane	ND	ug/L	0.5	0.5		NO	
29	Chlorodibromomethane	ND	ug/L	0.5	0.5		NO	
30	Bromoform	ND	ug/L	0.5	0.5		NO	
31	TOTAL Trihalomethanes	ND	ug/L	NA	NA	80		NO

ATTACHMENT A

Lab / Sample No.: 08977643

VOC ANALYSIS REPORT - METHOD 524.2

Water Management Laboratories, Inc.
1515 80th St. E.
Tacoma, WA 98404
(253) 531-3121

DOH #	ANALYTES	RESULTS	UNITS	SRL	TRIGGER	MCL	EXCEEDS	
	EPA UNREGULATED (Continued)						Trigger?	MCL?
53	Chloromethane	**ND**	ug/L	0.5	0.5		NO	
54	Bromomethane	**ND**	ug/L	0.5	0.5		NO	
58	1,1 - Dichloroethane	**ND**	ug/L	0.5	0.5		NO	
72	1,1,1,2 - Tetrachloroethane	**ND**	ug/L	0.5	0.5		NO	
78	Bromobenzene	**ND**	ug/L	0.5	0.5		NO	
79	1,2,3 - Trichloropropane (Confirm by 504.1)	**ND**	ug/L	0.5	0.5		NO	
81	o - Chlorotoluene	**ND**	ug/L	0.5	0.5		NO	
85	Fluorotrichloromethane	**ND**	ug/L	0.5	0.5		NO	
86	Bromochloromethane	**ND**	ug/L	0.5	0.5		NO	
89	1,3,5 - Trimethylbenzene	**ND**	ug/L	0.5	0.5		NO	
91	1,2,4 - Trimethylbenzene	**ND**	ug/L	0.5	0.5		NO	
92	s - Butylbenzene	**ND**	ug/L	0.5	0.5		NO	
93	p - Isopropyltoluene	**ND**	ug/L	0.5	0.5		NO	
94	n - Butylbenzene	**ND**	ug/L	0.5	0.5		NO	
96	Naphthalene	**ND**	ug/L	0.5	0.5		NO	
102	EDB (Confirm by 504.1)	**ND**	ug/L	0.5	0.5		NO	
103	DBCP (Confirm by 504.1)	**ND**	ug/L	0.5	0.5		NO	
162	Dichlorodifluoromethane	**ND**	ug/L	0.5	0.5		NO	
N/A	MTBE	**ND**	ug/L	0.5	0.5		NO	

NOTES:

SRL (State Reporting Level): Indicates the minimum reporting level required by the Washington Department of Health (DOH).

Trigger Level: DOH Drinking Water response level. Systems with compounds detected at concentrations in excess of this level may need to take additional samples. Contact your regional DOH office for further information.

MCL (Maximum Contaminant Level): If the contaminant amount exceeds the MCL, immediately contact your regional DOH office.

NA (Not Analyzed): In the RESULTS column indicates this compound was not included in the current analysis.

ND (Not Detected): In the RESULTS column indicates this compound was analyzed and not detected at a level greater than or equal to the SRL.

< : Indicates less than.

Comments:

Method 524.2: VOC's

WATER
MANAGEMENT
LABORATORIES INC.

1515 80th St. E.
Tacoma, WA 98404
(253) 531-3121

ATTACHMENT A

Well #2 - 2018

VOLATILE ORGANIC CHEMICALS (VOC's) ANALYSIS REPORT
EPA TEST METHOD - EPA 524.2
WA DOH TEST PANEL: VOC1

System ID No.: 75560Q
System Name: Sallal Water Association
Lab / Sample No.: 08977641
Date Collected: 04-11-18
DOH Source No.: S02
Multiple Source Nos.: N/A
Sample Type: B
Sample Purpose: C
Date Received: 04-11-18
Date Analyzed: 04-14-18
Analyst: JGH
Date Reported: 04-17-18
Supervisor:
County: King
Group: A
Sample Location: Sample Tap at Wellhead

Send To: Sallal Water Association
PO Box 378
North Bend, WA 98045

Remarks:

DOH #	ANALYTES	RESULTS	UNITS	SRL	TRIGGER	MCL	EXCEEDS	
	EPA REGULATED						Trigger?	MCL?
45	Vinyl Chloride	ND	ug/L	0.5	0.5	2	NO	NO
46	1,1 - Dichloroethylene	ND	ug/L	0.5	0.5	7	NO	NO
47	1,1,1 - Trichloroethane	ND	ug/L	0.5	0.5	200	NO	NO
48	Carbon Tetrachloride	ND	ug/L	0.5	0.5	5	NO	NO
49	Benzene	ND	ug/L	0.5	0.5	5	NO	NO
50	1,2 - Dichloroethane	ND	ug/L	0.5	0.5	5	NO	NO
51	Trichloroethylene	ND	ug/L	0.5	0.5	5	NO	NO
52	1,4 - Dichlorobenzene	ND	ug/L	0.5	0.5	75	NO	NO
56	Dichloromethane	ND	ug/L	0.5	0.5	5	NO	NO
57	trans-1,2 - Dichloroethylene	ND	ug/L	0.5	0.5	100	NO	NO
60	cis-1,2 - Dichloroethylene	ND	ug/L	0.5	0.5	70	NO	NO
63	1,2 - Dichloropropane	ND	ug/L	0.5	0.5	5	NO	NO
66	Toluene	ND	ug/L	0.5	0.5	1000	NO	NO
67	1,1,2 - Trichloroethane	ND	ug/L	0.5	0.5	5	NO	NO
68	Tetrachloroethylene	ND	ug/L	0.5	0.5	5	NO	NO
71	Chlorobenzene	ND	ug/L	0.5	0.5	100	NO	NO
73	Ethylbenzene	ND	ug/L	0.5	0.5	700	NO	NO
76	Styrene	ND	ug/L	0.5	0.5	100	NO	NO
84	1,2 - Dichlorobenzene	ND	ug/L	0.5	0.5	600	NO	NO
95	1,2,4 - Trichlorobenzene	ND	ug/L	0.5	0.5	70	NO	NO
160	Total Xylenes	ND	ug/L	0.5	0.5	10000	NO	NO
74	m/p Xylenes (MCL for Total)	ND	ug/L	0.5	0.5		NO	
75	o - Xylene (MCL for Total)	ND	ug/L	0.5	0.5		NO	
	TRIHALOMETHANES							
27	Chloroform	ND	ug/L	0.5	0.5		NO	
28	Bromodichloromethane	ND	ug/L	0.5	0.5		NO	
29	Chlorodibromomethane	ND	ug/L	0.5	0.5		NO	
30	Bromoform	ND	ug/L	0.5	0.5		NO	
31	TOTAL Trihalomethanes	ND	ug/L	NA	NA	80		NO

ATTACHMENT A

Lab / Sample No.: 08977641

VOC ANALYSIS REPORT - METHOD 524.2

Water Management Laboratories, Inc.
1515 80th St. E.
Tacoma, WA 98404
(253) 531-3121

DOH #	ANALYTES	RESULTS	UNITS	SRL	TRIGGER	MCL	EXCEEDS	
	EPA UNREGULATED (Continued)						Trigger?	MCL?
53	Chloromethane	**ND**	ug/L	0.5	0.5		NO	
54	Bromomethane	**ND**	ug/L	0.5	0.5		NO	
58	1,1 - Dichloroethane	**ND**	ug/L	0.5	0.5		NO	
72	1,1,1,2 - Tetrachloroethane	**ND**	ug/L	0.5	0.5		NO	
78	Bromobenzene	**ND**	ug/L	0.5	0.5		NO	
79	1,2,3 - Trichloropropane (Confirm by 504.1)	**ND**	ug/L	0.5	0.5		NO	
81	o - Chlorotoluene	**ND**	ug/L	0.5	0.5		NO	
85	Fluorotrichloromethane	**ND**	ug/L	0.5	0.5		NO	
86	Bromochloromethane	**ND**	ug/L	0.5	0.5		NO	
89	1,3,5 - Trimethylbenzene	**ND**	ug/L	0.5	0.5		NO	
91	1,2,4 - Trimethylbenzene	**ND**	ug/L	0.5	0.5		NO	
92	s - Butylbenzene	**ND**	ug/L	0.5	0.5		NO	
93	p - Isopropyltoluene	**ND**	ug/L	0.5	0.5		NO	
94	n - Butylbenzene	**ND**	ug/L	0.5	0.5		NO	
96	Naphthalene	**ND**	ug/L	0.5	0.5		NO	
102	EDB (Confirm by 504.1)	**ND**	ug/L	0.5	0.5		NO	
103	DBCP (Confirm by 504.1)	**ND**	ug/L	0.5	0.5		NO	
162	Dichlorodifluoromethane	**ND**	ug/L	0.5	0.5		NO	
N/A	MTBE	**ND**	ug/L	0.5	0.5		NO	

NOTES:

SRL (State Reporting Level): Indicates the minimum reporting level required by the Washington Department of Health (DOH).

Trigger Level: DOH Drinking Water response level. Systems with compounds detected at concentrations in excess of this level may need to take additional samples. Contact your regional DOH office for further information.

MCL (Maximum Contaminant Level): If the contaminant amount exceeds the MCL, immediately contact your regional DOH office.

NA (Not Analyzed): In the RESULTS column indicates this compound was not included in the current analysis.

ND (Not Detected): In the RESULTS column indicates this compound was analyzed and not detected at a level greater than or equal to the SRL.

< : Indicates less than.

Comments:

Method 524.2: VOC's

WATER
MANAGEMENT
LABORATORIES INC.

1515 80th St. E.
Tacoma, WA 98404
(253) 531-3121

ATTACHMENT A

515.1

SO-1 - 2015

SYNTHETIC ORGANIC CHEMICALS (SOC's) ANALYSIS REPORT
EPA TEST METHOD - EPA 515.1
WA DOH TEST PANEL: HERB1

System ID No.: 75560Q
System Name: Sallal Water Association
Lab/Sample No.: 08984639
Date Collected: 10-02-15
DOH Source No.: S01
Multiple Source Nos.: N/A
Sample Type: B
Sample Purpose: C
Date Received: 10-02-15
Date Analyzed: 10-09-15
Analyst: JGH
Date Extracted: 10-08-15
Date Reported: 10-12-15
Supervisor:
County: King
Group: A
Sample Location: Rattlesnake Well # 1 - Inside Well Building - Hose Bib

Send To: Sallai Water Association
PO Box 378
North Bend, WA 98045

Remarks:

DOH #	ANALYTES	RESULTS	UNITS	SRL	TRIGGER	MCL	EXCEEDS	
		EPA REGULATED					Trigger?	MCL?
37	2,4 - D	ND	ug/L	0.5	0.5	70	NO	NO
38	2,4,5 - TP (Silvex)	ND	ug/L	1.0	1.0	50	NO	NO
134	Pentachlorophenol	ND	ug/L	0.20	0.20	1	NO	NO
137	Dalapon	ND	ug/L	5.0	5.0	200	NO	NO
139	Dinoseb	ND	ug/L	1.0	1.0	7	NO	NO
140	Picloram	ND	ug/L	0.5	0.5	500	NO	NO
		EPA UNREGULATED						
135	2,4 - DB	ND	ug/L	1.0				
138	Dicamba	ND	ug/L	0.2				
223	Acifluorfen	ND	ug/L	2.0				
224	Chloramben	ND	ug/L	0.2				
225	DCPA Acid Metabolites (A)	ND	ug/L	0.1				
226	3,5-Dichlorobenzoic Acid	ND	ug/L	0.5				
228	4 - Nitrophenol	ND	ug/L	0.5				

NOTES:

SRL (State Reporting Level): Indicates the minimum reporting level required by the Washington Department of Health (DOH).

Trigger Level: DOH Drinking Water response level.

MCL (Maximum Contaminant Level): If the contaminant amount exceeds the MCL, immediately contact your regional DOH office.

NA (Not Analyzed): In the RESULTS column indicates this compound was not included in the current analysis.

ND (Not Detected): In the RESULTS column indicates this compound was analyzed and not detected at a level greater than or equal to the SRL.

< : Indicates less than.

Comments:

Method 515.1: Herbicides

WATER MANAGEMENT LABORATORIES INC.

1515 80th St. E.
Tacoma, WA 98404
(253) 531-3121

ATTACHMENT A

515.1

50-2 — 2015

SYNTHETIC ORGANIC CHEMICALS (SOC's) ANALYSIS REPORT
EPA TEST METHOD - EPA 515.1
WA DOH TEST PANEL: HERB1

System ID No.: 75560Q	System Name: Sallal Water Association	
Lab/Sample No.: 08984640	Date Collected: 10-02-15	DOH Source No.: S02
Multiple Source Nos.: N/A	Sample Type: B	Sample Purpose: C
Date Received: 10-02-15	Date Analyzed: 10-09-15	Analyst: JGH
Date Extracted: 10-08-15	Date Reported: 10-12-15	Supervisor:
County: King		Group: A
Sample Location: Rattlesnake Well # 2 - Inside Well Building - Hose Bib		
Send To. Sallai Water Association PO Box 378 North Bend, WA 98045		Remarks:

DOH #	ANALYTES	RESULTS	UNITS	SRL	TRIGGER	MCL	EXCEEDS	
		EPA REGULATED					Trigger?	MCL?
37	2,4 - D	ND	ug/L	0.5	0.5	70	NO	NO
38	2,4,5 - TP (Silvex)	ND	ug/L	1.0	1.0	50	NO	NO
134	Pentachlorophenol	ND	ug/L	0.20	0.20	1	NO	NO
137	Dalapon	ND	ug/L	5.0	5.0	200	NO	NO
139	Dinoseb	ND	ug/L	1.0	1.0	7	NO	NO
140	Picloram	ND	ug/L	0.5	0.5	500	NO	NO
		EPA UNREGULATED						
135	2,4 - DB	ND	ug/L	1.0				
138	Dicamba	ND	ug/L	0.2				
223	Acifluorfen	ND	ug/L	2.0				
224	Chloramben	ND	ug/L	0.2				
225	DCPA Acid Metabolites (A)	ND	ug/L	0.1				
226	3,5-Dichlorobenzoic Acid	ND	ug/L	0.5				
228	4 - Nitrophenol	ND	ug/L	0.5				

NOTES:

SRL (State Reporting Level): Indicates the minimum reporting level required by the Washington Department of Health (DOH).
Trigger Level: DOH Drinking Water response level.
MCL (Maximum Contaminant Level): If the contaminant amount exceeds the MCL, immediately contact your regional DOH office.
NA (Not Analyzed): In the RESULTS column indicates this compound was not included in the current analysis.
ND (Not Detected): In the RESULTS column indicates this compound was analyzed and not detected at a level greater than or equal to the SRL.
< : Indicates less than.

Comments:

Method 515.1: Herbicides

WATER
MANAGEMENT
LABORATORIES INC

ATTACHMENT A

515.1

SO-3-2015

1515 80th St. E.
Tacoma, WA 98404
(253) 531-3121

SYNTHETIC ORGANIC CHEMICALS (SOC's) ANALYSIS REPORT
EPA TEST METHOD - EPA 515.1
WA DOH TEST PANEL: HERB1

System ID No.: 75560Q
System Name: Sallal Water Association
Lab/Sample No.: 08984641
Date Collected: 10-02-15
DOH Source No.: S03
Multiple Source Nos.: N/A
Sample Type: B
Sample Purpose: C
Date Received: 10-02-15
Date Analyzed: 10-09-15
Analyst: JGH
Date Extracted: 10-08-15
Date Reported: 10-12-15
Supervisor:
County: King
Group: A
Sample Location: Edgewick Well # 3 - Inside Well Building - Hose Bib

Send To:
Sallal Water Association
PO Box 378
North Bend, WA 98045

Remarks:

DOH #	ANALYTES	RESULTS	UNITS	SRL	TRIGGER	MCL	EXCEEDS	
		EPA REGULATED					Trigger?	MCL?
37	2,4 - D	**ND**	ug/L	0.5	0.5	70	NO	NO
38	2,4,5 - TP (Silvex)	**ND**	ug/L	1.0	1.0	50	NO	NO
134	Pentachlorophenol	**ND**	ug/L	0.20	0.20	1	NO	NO
137	Dalapon	**ND**	ug/L	5.0	5.0	200	NO	NO
139	Dinoseb	**ND**	ug/L	1.0	1.0	7	NO	NO
140	Picloram	**ND**	ug/L	0.5	0.5	500	NO	NO
		EPA UNREGULATED						
135	2,4 - DB	**ND**	ug/L	1.0				
138	Dicamba	**ND**	ug/L	0.2				
223	Acifluorfen	**ND**	ug/L	2.0				
224	Chloramben	**ND**	ug/L	0.2				
225	DCPA Acid Metabolites (A)	**ND**	ug/L	0.1				
226	3,5-Dichlorobenzoic Acid	**ND**	ug/L	0.5				
228	4 - Nitrophenol	**ND**	ug/L	0.5				

NOTES:

SRL (State Reporting Level): Indicates the minimum reporting level required by the Washington Department of Health (DOH).

Trigger Level: DOH Drinking Water response level.

MCL (Maximum Contaminant Level): If the contaminant amount exceeds the MCL, immediately contact your regional DOH office.

NA (Not Analyzed): In the RESULTS column indicates this compound was not included in the current analysis.

ND (Not Detected): In the RESULTS column indicates this compound was analyzed and not detected at a level greater than or equal to the SRL.

< : Indicates less than.

Comments:

Method 515.1: Herbicides

ATTACHMENT A

WATER
MANAGEMENT
LABORATORIES INC.

1515 80th St. E.
Tacoma, WA 98404
(253) 531-3121

Well #1 - 2013

INORGANIC CHEMICALS (IOCS) REPORT FOR NITRATES

System ID No: 75560Q
System Name: Sallal Water Association
Lab/Sample No: 08947307
Date Collected: 04-10-13
DOH Source No: S01
Multiple Source Nos: NA
Sample Type: B
Sample Purpose: C
Date Received: 04-10-13
Date Reported: 04-12-13
Supervisor: OmB
Date Analyzed: 04-11-13
Analyst: LML
County: King
Group: [✓ A] B Other
Sample Location: Rattlesnake Well #1 - hosebib in wellhouse right downstream from well

Send Report To:
Sallal Water Association
PO Box 378
North Bend, WA 98045

Bill To:

DOH#	ANALYTES	RESULTS	UNITS	SRL	TRIGGER	MCL	EXCEEDS		Method/Analyst	
EPA REGULATED							Trigger?	MCL?		
114	Nitrite - N	NA	mg/l	0.1	0.5	1			300.0	
	Nitrate - N	<0.2	mg/l	0.2	5.0	10	No	No	300.0	LML
161	Total Nitrate/Nitrite	NA	mg/l	0.5	5.0	10			300.0	

NOTES:

SRL (State Reporting Level): indicates the minimum reporting level required by the Washington Department of Health (DOH).

Trigger Level: DOH Drinking Water response level. Systems with compounds detected at concentrations in excess of this level are required to take additional samples. Contact your regional DOH office for further information.

MCL (maximum contaminent level): If the contaminent amount exceeds the MCL, immediately contact your regional DOH office.

NA (Not Analyzed): in the results column indicates this compound was not included in the current analysis.

ND (Not Detected): in the results column indicates this compound was analyzed and not detected at a level greater than or equal to the SRL.

< (0.001): indicates the compound was not detected in the sample at or above the concentration indicated.

COMMENTS:

Nitrate

ATTACHMENT A

WATER
MANAGEMENT
LABORATORIES INC.

1515 80th St. E.
Tacoma, WA 98404
(253) 531-3121

Well #2 — 2013

INORGANIC CHEMICALS (IOCS) REPORT FOR NITRATES

System ID No: 75560Q
System Name: Sallal Water Association
Lab/Sample No: 08947308
Date Collected: 04-10-13
DOH Source No: S02
Multiple Source Nos: NA
Sample Type: B
Sample Purpose: C
Date Received: 04-10-13
Date Reported: 04-12-13
Supervisor:
Date Analyzed: 04-11-13
Analyst: UML
County: King
Group: [✓ A] B Other
Sample Location: Rattlesnake #2 hosebib in well building - downstream from well
Send Report To: Sallal Water Association
PO Box 378
North Bend, WA 98045
Bill To:

DOH#	ANALYTES	RESULTS	UNITS	SRL	TRIGGER	MCL	EXCEEDS		Method/Analyst	
EPA REGULATED							Trigger?	MCL?		
114	Nitrite - N	NA	mg/l	0.1	0.5	1			300.0	
	Nitrate - N	0.2	mg/l	0.2	5.0	10	No	No	300.0	UML
161	Total Nitrate/Nitrite	NA	mg/l	0.5	5.0	10			300.0	

NOTES:

SRL (State Reporting Level): indicates the minimum reporting level required by the Washington Department of Health (DOH).

Trigger Level: DOH Drinking Water response level. Systems with compounds detected at concentrations in excess of this level are required to take additional samples. Contact your regional DOH office for further information.

MCL (maximum contaminent level): If the contaminent amount exceeds the MCL, immediately contact your regional DOH office.

NA (Not Analyzed): in the results column indicates this compound was not included in the current analysis.

ND (Not Detected): in the results column indicates this compound was analyzed and not detected at a level greater than or equal to the SRL.

< (0.001): indicates the compound was not detected in the sample at or above the concentration indicated.

COMMENTS:

Nitrate

ATTACHMENT A

WATER MANAGEMENT LABORATORIES INC.

Well #3 — 2013

1515 80th St. E.
Tacoma, WA 98404
(253) 531-3121

INORGANIC CHEMICALS (IOCS) REPORT FOR NITRATES

System ID No: 75560Q

System Name: Sallal Water Association

Lab/Sample No: 08947309

Date Collected: 04-10-13

DOH Source No: S03

Multiple Source Nos: NA

Sample Type: B

Sample Purpose: C

Date Received: 04-10-13

Date Reported: 04-11-13

Supervisor: OMD

Date Analyzed: 04-11-13

Analyst: LM

County: King

Group: [✓ A] B Other

Sample Location: Edgewick Well #3 hosebib right after well in building

Send Report To: Sallal Water Association
PO Box 378
North Bend, WA 98045

Bill To:

DOH#	ANALYTES	RESULTS	UNITS	SRL	TRIGGER	MCL	EXCEEDS		Method/Analyst	
EPA REGULATED							Trigger?	MCL?		
114	Nitrite - N	NA	mg/l	0.1	0.5	1			300.0	
[illegible]	Nitrate - N	0.6	mg/l	0.2	5.0	10	No	No	300.0	LM
161	Total Nitrate/Nitrite	NA	mg/l	0.5	5.0	10			300.0	

NOTES:

SRL (State Reporting Level): indicates the minimum reporting level required by the Washington Department of Health (DOH).

Trigger Level: DOH Drinking Water response level. Systems with compounds detected at concentrations in excess of this level are required to take additional samples. Contact your regional DOH office for further information.

MCL (maximum contaminent level): If the contaminent amount exceeds the MCL, immediately contact your regional DOH office.

NA (Not Analyzed): in the results column indicates this compound was not included in the current analysis.

ND (Not Detected): in the results column indicates this compound was analyzed and not detected at a level greater than or equal to the SRL.

< (0.001): indicates the compound was not detected in the sample at or above the concentration indicated.

COMMENTS:

Nitrate

ATTACHMENT A

WATER MANAGEMENT LABORATORIES INC.

Well #1 – 2014

1515 80th St. E.
Tacoma, WA 98404
(253) 531-3121

*1,2 3

INORGANIC CHEMICALS (IOCS) REPORT FOR NITRATES

System ID No: 75560Q

System Name: Sallal Water Association

Lab/Sample No: 08952454

Date Collected: 06-04-14

DOH Source No: S01

Multiple Source Nos: NA

Sample Type: B

Sample Purpose: C

Date Received: 06-04-14

Date Reported: 06-06-14

Supervisor: mB

Date Analyzed: 06-05-14

Analyst: JGH

County: King

Group: [✓ A] B Other

Sample Location: Inside Well Building - Spigot

Send Report To: Sallal Water Association
PO Box 378
North Bend, WA 98045

Bill To:

DOH#	ANALYTES	RESULTS	UNITS	SRL	TRIGGER	MCL	EXCEEDS		Method/Analyst	
	EPA REGULATED						Trigger?	MCL?		
114	Nitrite - N	NA	mg/l	0.1	0.5	1			300.0	
	Nitrate - N	<0.2	mg/l	0.2	5.0	10	No	No	300.0	JGH
161	Total Nitrate/Nitrite	NA	mg/l	0.5	5.0	10			300.0	

NOTES:

SRL (State Reporting Level): indicates the minimum reporting level required by the Washington Department of Health (DOH).

Trigger Level: DOH Drinking Water response level. Systems with compounds detected at concentrations in excess of this level are required to take additional samples. Contact your regional DOH office for further information.

MCL (maximum contaminent level): If the contaminent amount exceeds the MCL, immediately contact your regional DOH office.

NA (Not Analyzed): in the results column indicates this compound was not included in the current analysis.

ND (Not Detected): in the results column indicates this compound was analyzed and not detected at a level greater than or equal to the SRL.

< (0.001): indicates the compound was not detected in the sample at or above the concentration indicated.

COMMENTS:

Nitrate

S01 = RattleSnake Well #1

ATTACHMENT A

WATER
MANAGEMENT
LABORATORIES INC.

Well #2 — 2014

1515 80th St. E.
Tacoma, WA 98404
(253) 531-3121

*1,2,3

INORGANIC CHEMICALS (IOCS) REPORT FOR NITRATES

System ID No: 75560Q
System Name: Sallal Water Association
Lab/Sample No: 08952453
Date Collected: 06-04-14
DOH Source No: S02
Multiple Source Nos: NA
Sample Type: B
Sample Purpose: C
Date Received: 06-04-14
Date Reported: 06-06-14
Supervisor: OMB
Date Analyzed: 06-05-14
Analyst: JGH
County: King
Group: [✓ A] B Other
Sample Location: Inside Well Building - Hosebib

Send Report To: Sallal Water Assoc
PO Box 378
North Bend, WA 98045

Bill To:

DOH#	ANALYTES	RESULTS	UNITS	SRL	TRIGGER	MCL	EXCEEDS		Method/Analyst	
EPA REGULATED							Trigger?	MCL?		
114	Nitrite - N	NA	mg/l	0.1	0.5	1			300.0	
[illegible]	Nitrate - N	<0.2	mg/l	0.2	5.0	10	No	No	300.0	JGH
161	Total Nitrate/Nitrite	NA	mg/l	0.5	5.0	10			300.0	

NOTES:

SRL (State Reporting Level): indicates the minimum reporting level required by the Washington Department of Health (DOH).

Trigger Level: DOH Drinking Water response level. Systems with compounds detected at concentrations in excess of this level are required to take additional samples. Contact your regional DOH office for further information.

MCL (maximum containment level): If the containment amount exceeds the MCL, immediately contact your regional DOH office.

NA (Not Analyzed): in the results column indicates this compound was not included in the current analysis.

ND (Not Detected): in the results column indicates this compound was analyzed and not detected at a level greater than or equal to the SRL.

< (0.001): indicates the compound was not detected in the sample at or above the concentration indicated.

COMMENTS:

Nitrate

S02 = RattleSnake Well #2

ATTACHMENT A

WATER MANAGEMENT LABORATORIES INC. Well #3 - 2014

1515 80th St. E.
Tacoma, WA 98404
(253) 531-3121

*1,2 3

INORGANIC CHEMICALS (IOCS) REPORT FOR NITRATES

System ID No: 75560Q
System Name: Sallal Water Association
Lab/Sample No: 0895245
Date Collected: 06-04-14
DOH Source No: S03
Multiple Source Nos: NA
Sample Type: B
Sample Purpose: C
Date Received: 06-04-14
Date Reported: 06-06-14
Supervisor: MB
Date Analyzed: 06-05-14
Analyst: JGH
County: King
Group: [✓ A] B Other
Sample Location: Inside Well Building - Hosebib
Send Report To: Sallal Water Association
PO Box 378
North Bend, WA 98045
Bill To:

DOH#	ANALYTES	RESULTS	UNITS	SRL	TRIGGER	MCL	EXCEEDS		Method/Analyst	
EPA REGULATED							Trigger?	MCL?		
114	Nitrite - N	NA	mg/l	0.1	0.5	1			300.0	
20	Nitrate - N	0.6	mg/l	0.2	5.0	10	No	No	300.0	JGH
161	Total Nitrate/Nitrite	NA	mg/l	0.5	5.0	10			300.0	

NOTES:

SRL (State Reporting Level): indicates the minimum reporting level required by the Washington Department of Health (DOH).

Trigger Level: DOH Drinking Water response level. Systems with compounds detected at concentrations in excess of this level are required to take additional samples. Contact your regional DOH office for further information.

MCL (maximum contaminent level): If the contaminent amount exceeds the MCL, immediately contact your regional DOH office.

NA (Not Analyzed): in the results column indicates this compound was not included in the current analysis.

ND (Not Detected): in the results column indicates this compound was analyzed and not detected at a level greater than or equal to the SRL.

< (0.001): indicates the compound was not detected in the sample at or above the concentration indicated.

COMMENTS:

Nitrate

S03 = Edgewick Well #3

ATTACHMENT A

WATER MANAGEMENT LABORATORIES INC. Well #1 – 2015

1515 80th St. E.
Tacoma, WA 98404
(253) 531-3121

INORGANIC CHEMICALS (IOCS) REPORT FOR NITRATES

System ID No: 75560Q
System Name: Sallal Water Association
Lab/Sample No: 08958551
Date Collected: 09-16-15
DOH Source No: S01
Multiple Source Nos: N/A
Sample Type: B
Sample Purpose: C
Date Received: 09-16-15
Date Reported: 09-18-15
Supervisor:
Date Analyzed: 09-17-15
Analyst: JGA
County: King
Group: [✓ A] B Other
Sample Location: Wellhouse tap – Rattle Snake well #1
Send Report & Bill To: Sallal Water Association
PO Box 378
North Bend, WA 98045
Remarks:

DOH#	ANALYTES	RESULTS	UNITS	SRL	TRIGGER	MCL	EXCEEDS		Method/Analyst	
EPA REGULATED							Trigger?	MCL?		
114	Nitrite - N	NA	mg/l	0.1	0.5	1			300.0	
	Nitrate - N	<0.2	mg/l	0.2	5.0	10	No	No	300.0	JGA
161	Total Nitrate/Nitrite	NA	mg/l	0.5	5.0	10			300.0	

NOTES:

SRL (State Reporting Level): indicates the minimum reporting level required by the Washington Department of Health (DOH).

Trigger Level: DOH Drinking Water response level. Systems with compounds detected at concentrations in excess of this level are required to take additional samples. Contact your regional DOH office for further information.

MCL (maximum contaminent level): If the contaminent amount exceeds the MCL, immediately contact your regional DOH office.

NA (Not Analyzed): in the results column indicates this compound was not included in the current analysis.

ND (Not Detected): in the results column indicates this compound was analyzed and not detected at a level greater than or equal to the SRL.

< (0.001): indicates the compound was not detected in the sample at or above the concentration indicated.

COMMENTS:

Nitrate

ATTACHMENT A

WATER MANAGEMENT LABORATORIES INC. Well #2 - 2015

1515 80th St. E.
Tacoma, WA 98404
(253) 531-3121

INORGANIC CHEMICALS (IOCS) REPORT FOR NITRATES

System ID No: 75560Q
System Name: Sallal Water Association
Lab/Sample No: 08958553
Date Collected: 09-16-15
DOH Source No: S02
Multiple Source Nos: N/A
Sample Type: B
Sample Purpose: C
Date Received: 09-16-15
Date Reported: 09-18-15
Supervisor: LM
Date Analyzed: 09-17-15
Analyst: JGA
County: King
Group: [✓ A] B Other
Sample Location: Inside Well Bldg. - Hose Bib (Rattlesnake Well #2)
Send Report & Bill To: Sallal Water Association
P.O. Box 378
North Bend, WA 98045
Remarks:

DOH#	ANALYTES	RESULTS	UNITS	SRL	TRIGGER	MCL	EXCEEDS		Method/Analyst	
EPA REGULATED							Trigger?	MCL?		
114	Nitrite - N	NA	mg/l	0.1	0.5	1			300.0	
[illegible]	Nitrate - N	<0.2	mg/l	0.2	5.0	10	No	No	300.0	JGA
161	Total Nitrate/Nitrite	NA	mg/l	0.5	5.0	10			300.0	

NOTES:

SRL (State Reporting Level): indicates the minimum reporting level required by the Washington Department of Health (DOH).

Trigger Level: DOH Drinking Water response level. Systems with compounds detected at concentrations in excess of this level are required to take additional samples. Contact your regional DOH office for further information.

MCL (maximum contaminent level): If the contaminent amount exceeds the MCL, immediately contact your regional DOH office.

NA (Not Analyzed): in the results column indicates this compound was not included in the current analysis.

ND (Not Detected): in the results column indicates this compound was analyzed and not detected at a level greater than or equal to the SRL.

< (0.001): indicates the compound was not detected in the sample at or above the concentration indicated.

COMMENTS:

Nitrate

ATTACHMENT A

WATER MANAGEMENT LABORATORIES INC. Well #3 - 2015

1515 80th St. E.
Tacoma, WA 98404
(253) 531-3121

INORGANIC CHEMICALS (IOCS) REPORT FOR NITRATES

System ID No: 75560Q
System Name: Sallal Water Association
Lab/Sample No: 08958552
Date Collected: 09-16-15
DOH Source No: S03
Multiple Source Nos: N/A
Sample Type: B
Sample Purpose: C
Date Received: 09-16-15
Date Reported: 09-18-15
Supervisor:
Date Analyzed: 09-17-15
Analyst: JGA
County: King
Group: [✓ A] B Other
Sample Location: Inside Wellhouse - Hose Bib (Edgewick - Well #3)
Send Report & Bill To: Sallal Water Association
P.O. Box 378
North Bend, WA 98042
Remarks:

DOH#	ANALYTES	RESULTS	UNITS	SRL	TRIGGER	MCL	EXCEEDS		Method/Analyst	
EPA REGULATED							Trigger?	MCL?		
114	Nitrite - N	NA	mg/l	0.1	0.5	1			300.0	
0	Nitrate - N	0.6	mg/l	0.2	5.0	10	No	No	300.0	JGA
161	Total Nitrate/Nitrite	NA	mg/l	0.5	5.0	10			300.0	

NOTES:

SRL (State Reporting Level): indicates the minimum reporting level required by the Washington Department of Health (DOH).

Trigger Level: DOH Drinking Water response level. Systems with compounds detected at concentrations in excess of this level are required to take additional samples. Contact your regional DOH office for further information.

MCL (maximum contaminent level): If the contaminent amount exceeds the MCL, immediately contact your regional DOH office.

NA (Not Analyzed): in the results column indicates this compound was not included in the current analysis.

ND (Not Detected): in the results column indicates this compound was analyzed and not detected at a level greater than or equal to the SRL.

< (0.001): indicates the compound was not detected in the sample at or above the concentration indicated.

COMMENTS:

Nitrate

ATTACHMENT A

WATER
MANAGEMENT
LABORATORIES INC.

1515 80th St. E.
Tacoma, WA 98404
(253) 531-3121

PERFLUORINATED ANALYSIS REPORT
EPA TEST METHOD - EPA 537

System ID No.: 75560Q
System Name: Sallal Water Association
Lab/Sample No.: 08986377
Date Collected: 07-05-18
DOH Source No.: S03
Multiple Source Nos.: NA
Sample Type: B
Sample Purpose: I
Date Received: 07-05-18
Date Analyzed: 07-20-18
Analyst: ALI
Date Extracted: 07-18-18
Date Reported: 07-31-18
Supervisor:
County: King
Group: A
Sample Location: Wellhead Sample Tap
Send To: Sallal Water Association
P.O. Box 378
North Bend, WA 98045
Remarks:

DOH #	ANALYTES	RESULTS	UNITS	PQL	Qualifier	Comments
	EPA UNREGULATED					
2801	Perfluorobutanesulfonic Acid - PFBS	ND	ug/L	0.09		
2802	Perfluoroheptanoic Acid - PFHpA	ND	ug/L	0.01		
2803	Perfluorohexanesulfonic Acid - PFHxS	ND	ug/L	0.03		
2804	Perfluorononanoic Acid - PFNA	ND	ug/L	0.02		
2805	Perfluorooctanesulfonic Acid - PFOS	ND	ug/L	0.04		
2806	Perfluorooctanoic Acid - PFOA	ND	ug/L	0.02		

NOTES:

MDL (Method Detection Limit) The EPA determined level at which the laboratory must be able to detect the analyte
PQL (Practical Quantitation Limit)
NA (Not Analyzed): In the RESULTS column indicates this compound was not included in the current analysis.
ND (Not Detected): In the RESULTS column indicates this compound was analyzed and not detected at a level greater than or equal to the MDL
J Result is between the Laboratory MDL and PQL

ALI Lab Number: 180712028-001
Method 537: PERFLUORINATED COMPOUNDS

ATTACHMENT A

WATER MANAGEMENT LABORATORIES INC. Well #1 - 2015

1515 80th St. E.
Tacoma, WA 98404
(253) 531-3121

RADIONUCLIDE ANALYSIS REPORT

System ID No.: 75560Q
System Name: Sallal Water Association
Lab Sample No.: 08992104
Date Collected: 10/02/15
DOH Source No: S01
Multiple Source Nos.: N/A
Sample Type: B
Sample Purpose: C
County: King
Group: A
Analyst: TA
Date Received: 10/02/15
Date Reported: 11/04/15
Supervisor:
Sample Location: Rattlesnake Well #1 - Indside Well Bldg. Hosebib

Send To: Sallal Water Association
PO Box 378
North Bend, WA 98045

Comments:

DOH #	ANALYTES	ANALYSIS DATE	RESULTS	UNITS	SRL	TRIGGER	MCL	EXCEEDS		METHOD
				EPA REGULATED				Trigger	MCL	
165	Gross Alpha	10/30/15	ND	pCi/L	3.0	3.0	15.0	NO	NO	EPA 900.0: RL-GPC-001
166	Radium 228	10/22/15	ND	pCi/L	1.0	1.0	5.0*	NO	NO	EPA 904.0: RL-RA-001
42	Gross Beta	NA	NA	pCi/L	4.0	4.0	50.0	NA	NA	EPA 900.0: RL-GPC-001
39	Radium 226	NA	NA	pCi/L	1.0	1.0	5.0*	NA	NA	EPA 903.1
N/A	Radon 222	NA	NA	pCi/L	50.0	N/A	300	NA	NA	EPA 913.0

NOTES:

SRL (State Reporting Level): Indicates the minimum reporting level required by the Washington Department of Health (DOH).

MDL (Minimum Detection Level) Lowest valid detection level.

MCL (Federal Maximum Contaminant Level): Levels found above this amount should take steps to mitigate levels and/or confer with DOH.

NA (Not Analyzed): In the RESULTS column indicates this compound was not included in the current analysis.

ND (Not Detected): In the RESULTS column indicates this compound was analyzed and not detected at a level greater than or equal to the SRL.

* A Maximum Contaminant Level of 5pCi/L total is allowed for Radium 226 & Radium 228

Comments:

TA NO: J5J080415-1
WA LAB NO: 028

ATTACHMENT A

WATER
MANAGEMENT
LABORATORIES INC.

1515 80th St. E.
Tacoma, WA 98404
(253) 531-3121

Well #2 - 2015

RADIONUCLIDE ANALYSIS REPORT

System ID No.: 75560Q	System Name: Sallal Water Association	
Lab Sample No.: 08992105	Date Collected: 10/02/15	DOH Source No: S02
Multiple Source Nos.: N/A	Sample Type: B	Sample Purpose: C
County: King	Group: A	Analyst: TA
Date Received: 10/02/15	Date Reported: 11/04/15	Supervisor:

Sample Location: Rattlesnake Well #2, Inside Well Bldg - Hosebib

Send To: Sallal Water Association
PO Box 378
North Bend, WA 98045

Comments:

DOH #	ANALYTES	ANALYSIS DATE	RESULTS	UNITS	SRL	TRIGGER	MCL	EXCEEDS		METHOD
				EPA REGULATED				Trigger	MCL	
165	Gross Alpha	10/30/15	ND	pCi/L	3.0	3.0	15.0	NO	NO	EPA 900.0: RL-GPC-001
166	Radium 228	10/22/15	ND	pCi/L	1.0	1.0	5.0*	NO	NO	EPA 904.0: RL-RA-001
42	Gross Beta	NA	NA	pCi/L	4.0	4.0	50.0	NA	NA	EPA 900.0: RL-GPC-001
39	Radium 226	NA	NA	pCi/L	1.0	1.0	5.0*	NA	NA	EPA 903.1
N/A	Radon 222	NA	NA	pCi/L	50.0	N/A	300	NA	NA	EPA 913.0

NOTES:

SRL (State Reporting Level): Indicates the minimum reporting level required by the Washington Department of Health (DOH).

MDL (Minimum Detection Level) Lowest valid detection level.

MCL (Federal Maximum Contaminant Level): Levels found above this amount should take steps to mitigate levels and/or confer with DOH.

NA (Not Analyzed): In the RESULTS column indicates this compound was not included in the current analysis.

ND (Not Detected): In the RESULTS column indicates this compound was analyzed and not detected at a level greater than or equal to the SRL.

* A Maximum Contaminant Level of 5pCi/L total is allowed for Radium 226 & Radium 228

Comments:

TA NO: J5J080415-2
WA LAB NO: 028

ATTACHMENT A

WATER MANAGEMENT LABORATORIES INC.

1515 80th St. E.
Tacoma, WA 98404
(253) 531-3121

Well #1 – 2015

RADIONUCLIDE ANALYSIS REPORT

System ID No.: 75560Q
System Name: Sallal Water Association
Lab Sample No.: 08992106
Date Collected: 10/02/15
DOH Source No: S03
Multiple Source Nos.: N/A
Sample Type: B
Sample Purpose: C
County: King
Group: A
Analyst: TA
Date Received: 10/02/15
Date Reported: 11/04/15
Supervisor:
Sample Location: Edgewick Well #3, Inside Well Bldg - Hosebib
Send To: Sallal Water Association
PO Box 378
North Bend, WA 98045
Comments:

DOH #	ANALYTES	ANALYSIS DATE	RESULTS	UNITS	SRL	TRIGGER	MCL	EXCEEDS		METHOD
				EPA REGULATED				Trigger	MCL	
165	Gross Alpha	10/30/15	ND	pCi/L	3.0	3.0	15.0	NO	NO	EPA 900.0: RL-GPC-001
166	Radium 228	10/22/15	ND	pCi/L	1.0	1.0	5.0*	NO	NO	EPA 904.0: RL-RA-001
42	Gross Beta	NA	NA	pCi/L	4.0	4.0	50.0	NA	NA	EPA 900.0: RL-GPC-001
39	Radium 226	NA	NA	pCi/L	1.0	1.0	5.0*	NA	NA	EPA 903.1
N/A	Radon 222	NA	NA	pCi/L	50.0	N/A	300	NA	NA	EPA 913.0

NOTES:

SRL (State Reporting Level): Indicates the minimum reporting level required by the Washington Department of Health (DOH).

MDL (Minimum Detection Level) Lowest valid detection level.

MCL (Federal Maximum Contaminant Level): Levels found above this amount should take steps to mitigate levels and/or confer with DOH.

NA (Not Analyzed): In the RESULTS column indicates this compound was not included in the current analysis.

ND (Not Detected): In the RESULTS column indicates this compound was analyzed and not detected at a level greater than or equal to the SRL.

* A Maximum Contaminant Level of 5pCi/L total is allowed for Radium 226 & Radium 228

Comments:

TA NO: J5J080415-3
WA LAB NO: 028

ATTACHMENT A

WATER MANAGEMENT LABORATORIES INC.

1515 80th St. E.
Tacoma, WA 98404
(253) 531-3121

Well #3

205

VOLATILE ORGANIC CHEMICALS (VOC's) ANALYSIS REPORT
EPA TEST METHOD - EPA 524.2
WA DOH TEST PANEL: VOC1

System ID No.: 75560Q | System Name: Sallal Water Association

Lab / Sample No.: 08977642 | Date Collected: 04-11-18 | DOH Source No.: S03

Multiple Source Nos.: N/A | Sample Type: B | Sample Purpose: C

Date Received: 04-11-18 | Date Analyzed: 04-14-18 | Analyst: JGH

Date Reported: 04-17-18 | Supervisor:

County: King | Group: A

Sample Location: Sample Tap at Wellhead

Send To:
Sallal Water Association
PO Box 378
North Bend, WA 98045

Remarks:

DOH #	ANALYTES	RESULTS	UNITS	SRL	TRIGGER	MCL	EXCEEDS	
	EPA REGULATED						Trigger?	MCL?
45	Vinyl Chloride	**ND**	ug/L	0.5	0.5	2	NO	NO
46	1,1 - Dichloroethylene	**ND**	ug/L	0.5	0.5	7	NO	NO
47	1,1,1 - Trichloroethane	**ND**	ug/L	0.5	0.5	200	NO	NO
48	Carbon Tetrachloride	**ND**	ug/L	0.5	0.5	5	NO	NO
49	Benzene	**ND**	ug/L	0.5	0.5	5	NO	NO
50	1,2 - Dichloroethane	**ND**	ug/L	0.5	0.5	5	NO	NO
51	Trichloroethylene	**ND**	ug/L	0.5	0.5	5	NO	NO
52	1,4 - Dichlorobenzene	**ND**	ug/L	0.5	0.5	75	NO	NO
56	Dichloromethane	**ND**	ug/L	0.5	0.5	5	NO	NO
57	trans-1,2 - Dichloroethylene	**ND**	ug/L	0.5	0.5	100	NO	NO
60	cis-1,2 - Dichloroethylene	**ND**	ug/L	0.5	0.5	70	NO	NO
63	1,2 - Dichloropropane	**ND**	ug/L	0.5	0.5	5	NO	NO
66	Toluene	**ND**	ug/L	0.5	0.5	1000	NO	NO
67	1,1,2 - Trichloroethane	**ND**	ug/L	0.5	0.5	5	NO	NO
68	Tetrachloroethylene	**ND**	ug/L	0.5	0.5	5	NO	NO
71	Chlorobenzene	**ND**	ug/L	0.5	0.5	100	NO	NO
73	Ethylbenzene	**ND**	ug/L	0.5	0.5	700	NO	NO
76	Styrene	**ND**	ug/L	0.5	0.5	100	NO	NO
84	1,2 - Dichlorobenzene	**ND**	ug/L	0.5	0.5	600	NO	NO
95	1,2,4 - Trichlorobenzene	**ND**	ug/L	0.5	0.5	70	NO	NO
160	Total Xylenes	**ND**	ug/L	0.5	0.5	10000	NO	NO
74	m/p Xylenes (MCL for Total)	**ND**	ug/L	0.5	0.5		NO	
75	o - Xylene (MCL for Total)	**ND**	ug/L	0.5	0.5		NO	
	TRIHALOMETHANES							
27	Chloroform	**ND**	ug/L	0.5	0.5		NO	
28	Bromodichloromethane	**ND**	ug/L	0.5	0.5		NO	
29	Chlorodibromomethane	**ND**	ug/L	0.5	0.5		NO	
30	Bromoform	**ND**	ug/L	0.5	0.5		NO	
31	TOTAL Trihalomethanes	**ND**	ug/L	NA	NA	80		NO

Lab / Sample No.: 08977642

VOC ANALYSIS REPORT - METHOD 524.2 **page 2**

Water Management Laboratories, Inc.
1515 80th St. E.
Tacoma, WA 98404
(253) 531-3121

DOH #	ANALYTES	RESULTS	UNITS	SRL	TRIGGER	MCL	EXCEEDS	
	EPA UNREGULATED (Continued)						Trigger?	MCL?
53	Chloromethane	**ND**	ug/L	0.5	0.5		NO	
54	Bromomethane	**ND**	ug/L	0.5	0.5		NO	
58	1,1 - Dichloroethane	**ND**	ug/L	0.5	0.5		NO	
72	1,1,1,2 - Tetrachloroethane	**ND**	ug/L	0.5	0.5		NO	
78	Bromobenzene	**ND**	ug/L	0.5	0.5		NO	
79	1,2,3 - Trichloropropane (Confirm by 504.1)	**ND**	ug/L	0.5	0.5		NO	
81	o - Chlorotoluene	**ND**	ug/L	0.5	0.5		NO	
85	Fluorotrichloromethane	**ND**	ug/L	0.5	0.5		NO	
86	Bromochloromethane	**ND**	ug/L	0.5	0.5		NO	
89	1,3,5 - Trimethylbenzene	**ND**	ug/L	0.5	0.5		NO	
91	1,2,4 - Trimethylbenzene	**ND**	ug/L	0.5	0.5		NO	
92	s - Butylbenzene	**ND**	ug/L	0.5	0.5		NO	
93	p - Isopropyltoluene	**ND**	ug/L	0.5	0.5		NO	
94	n - Butylbenzene	**ND**	ug/L	0.5	0.5		NO	
96	Naphthalene	**ND**	ug/L	0.5	0.5		NO	
102	EDB (Confirm by 504.1)	**ND**	ug/L	0.5	0.5		NO	
103	DBCP (Confirm by 504.1)	**ND**	ug/L	0.5	0.5		NO	
162	Dichlorodifluoromethane	**ND**	ug/L	0.5	0.5		NO	
N/A	MTBE	**ND**	ug/L	0.5	0.5		NO	

NOTES:

SRL (State Reporting Level): Indicates the minimum reporting level required by the Washington Department of Health (DOH).

Trigger Level: DOH Drinking Water response level. Systems with compounds detected at concentrations in excess of this level may need to take additional samples. Contact your regional DOH office for further information.

MCL (Maximum Contaminant Level): If the contaminant amount exceeds the MCL, immediately contact your regional DOH office.

NA (Not Analyzed): In the RESULTS column indicates this compound was not included in the current analysis.

ND (Not Detected): In the RESULTS column indicates this compound was analyzed and not detected at a level greater than or equal to the SRL.

< : Indicates less than.

Comments:

Method 524.2: VOC's

ATTACHMENT A

WATER
MANAGEMENT
LABORATORIES INC.

1515 80th St. E.
Tacoma, WA 98404
(253) 531-3121

Well #1 - 2015

VOLATILE ORGANIC CHEMICALS (VOC's) ANALYSIS REPORT
EPA TEST METHOD - EPA 524.2
WA DOH TEST PANEL: VOC1

System ID No.: 75560Q
System Name: Sallal Water Association
Lab/Sample No.: 08975538
Date Collected: 10/02/15
DOH Source No.: S01
Multiple Source Nos.: N/A
Sample Type: B
Sample Purpose: C
Date Received: 10/02/15
Date Analyzed: 10/05/15
Analyst: LHL
Date Reported: 10/07/15
Supervisor:
County: King
Group: A
Sample Location: Inside Well Building - Hosebib
Send To: Sallal Water Association
PO Box 378
North Bend, WA 98045
Remarks:

Rattle Snake Well #1

DOH #	ANALYTES	RESULTS	UNITS	SRL	TRIGGER	MCL	EXCEEDS	
	EPA REGULATED						Trigger?	MCL?
45	Vinyl Chloride	ND	ug/L	0.5	0.5	2	NO	NO
46	1,1 - Dichloroethylene	ND	ug/L	0.5	0.5	7	NO	NO
47	1,1,1 - Trichloroethane	ND	ug/L	0.5	0.5	200	NO	NO
48	Carbon Tetrachloride	ND	ug/L	0.5	0.5	5	NO	NO
49	Benzene	ND	ug/L	0.5	0.5	5	NO	NO
50	1,2 - Dichloroethane	ND	ug/L	0.5	0.5	5	NO	NO
51	Trichloroethylene	ND	ug/L	0.5	0.5	5	NO	NO
52	1,4 - Dichlorobenzene	ND	ug/L	0.5	0.5	75	NO	NO
56	Dichloromethane	ND	ug/L	0.5	0.5	5	NO	NO
57	trans-1,2 - Dichloroethylene	ND	ug/L	0.5	0.5	100	NO	NO
60	cis-1,2 - Dichloroethylene	ND	ug/L	0.5	0.5	70	NO	NO
63	1,2 - Dichloropropane	ND	ug/L	0.5	0.5	5	NO	NO
66	Toluene	ND	ug/L	0.5	0.5	1000	NO	NO
67	1,1,2 - Trichloroethane	ND	ug/L	0.5	0.5	5	NO	NO
68	Tetrachloroethylene	ND	ug/L	0.5	0.5	5	NO	NO
71	Chlorobenzene	ND	ug/L	0.5	0.5	100	NO	NO
73	Ethylbenzene	ND	ug/L	0.5	0.5	700	NO	NO
76	Styrene	ND	ug/L	0.5	0.5	100	NO	NO
84	1,2 - Dichlorobenzene	ND	ug/L	0.5	0.5	600	NO	NO
95	1,2,4 - Trichlorobenzene	ND	ug/L	0.5	0.5	70	NO	NO
160	Total Xylenes	ND	ug/L	0.5	0.5	10000	NO	NO
74	m/p Xylenes (MCL for Total)	ND	ug/L	0.5	0.5		NO	
75	o - Xylene (MCL for Total)	ND	ug/L	0.5	0.5		NO	
	TRIHALOMETHANES							
27	Chloroform	ND	ug/L	0.5	0.5		NO	
28	Bromodichloromethane	ND	ug/L	0.5	0.5		NO	
29	Chlorodibromomethane	ND	ug/L	0.5	0.5		NO	
30	Bromoform	ND	ug/L	0.5	0.5		NO	
31	TOTAL Trihalomethanes	ND	ug/L	NA	NA	80		NO

ATTACHMENT A

Lab/Sample No.: 08975538

VOC ANALYSIS REPORT - METHOD 524.2 **page 2**

Water Management Laboratories, Inc.
1515 80th St. E.
Tacoma, WA 98404
(253) 531-3121

DOH #	ANALYTES	RESULTS	UNITS	SRL	TRIGGER	MCL	EXCEEDS	
EPA UNREGULATED (Continued)							Trigger?	MCL?
53	Chloromethane	**ND**	ug/L	0.5	0.5		NO	
54	Bromomethane	**ND**	ug/L	0.5	0.5		NO	
58	1,1 - Dichloroethane	**ND**	ug/L	0.5	0.5		NO	
72	1,1,1,2 - Tetrachloroethane	**ND**	ug/L	0.5	0.5		NO	
78	Bromobenzene	**ND**	ug/L	0.5	0.5		NO	
79	1,2,3 - Trichloropropane (Confirm by 504.1)	**ND**	ug/L	0.5	0.5		NO	
81	o - Chlorotoluene	**ND**	ug/L	0.5	0.5		NO	
85	Fluorotrichloromethane	**ND**	ug/L	0.5	0.5		NO	
86	Bromochloromethane	**ND**	ug/L	0.5	0.5		NO	
89	1,3,5 - Trimethylbenzene	**ND**	ug/L	0.5	0.5		NO	
91	1,2,4 - Trimethylbenzene	**ND**	ug/L	0.5	0.5		NO	
92	s - Butylbenzene	**ND**	ug/L	0.5	0.5		NO	
93	p - Isopropyltoluene	**ND**	ug/L	0.5	0.5		NO	
94	n - Butylbenzene	**ND**	ug/L	0.5	0.5		NO	
96	Napthalene	**ND**	ug/L	0.5	0.5		NO	
102	EDB (Confirm by 504.1)	**ND**	ug/L	0.5	0.5		NO	
103	DBCP (Confirm by 504.1)	**ND**	ug/L	0.5	0.5		NO	
162	Dichlorodifluoromethane	**ND**	ug/L	0.5	0.5		NO	
I/A	MTBE	**ND**	ug/L	0.5	0.5		NO	

NOTES:

SRL (State Reporting Level): Indicates the minimum reporting level required by the Washington Department of Health (DOH).

Trigger Level: DOH Drinking Water response level. Systems with compounds detected at concentrations in excess of this level may need to take additional samples. Contact your regional DOH office for further information.

MCL (Maximum Contaminant Level): If the contaminant amount exceeds the MCL, immediately contact your regional DOH office.

NA (Not Analyzed): In the RESULTS column indicates this compound was not included in the current analysis.

ND (Not Detected): In the RESULTS column indicates this compound was analyzed and not detected at a level greater than or equal to the SRL.

< : Indicates less than.

Comments:

Method 524.2: VOC's

WATER
MANAGEMENT
LABORATORIES INC.

1515 80th St. E.
Tacoma, WA 98404
(253) 531-3121

Well #2 - 2012

ATTACHMENT A

VOLATILE ORGANIC CHEMICALS (VOC's) ANALYSIS REPORT
EPA TEST METHOD - EPA 524.2
WA DOH TEST PANEL: VOC1

System ID No.: 75560Q
System Name: Sallal Water Association
Lab/Sample No.: 08971322
Date Collected: 04/11/12
DOH Source No.: S02
Multiple Source Nos.: N/A
Sample Type: B
Sample Purpose: C
Date Received: 04/11/12
Date Analyzed: 04/17/12
Analyst: LHL
Date Reported: 04/18/12
Supervisor:
County: King
Group: A
Sample Location: Rattle Snake #2, Inside Well Bldg #2, Hosebib

Send To: Sallal Water Association
PO Box 378
North Bend, WA 98045

Remarks:

DOH #	ANALYTES	RESULTS	UNITS	SRL	TRIGGER	MCL	EXCEEDS	
	EPA REGULATED						Trigger?	MCL?
[illegible]	Vinyl Chloride	ND	ug/L	0.5	0.5	2	NO	NO
[illegible]	1,1 - Dichloroethylene	ND	ug/L	0.5	0.5	7	NO	NO
47	1,1,1 - Trichloroethane	ND	ug/L	0.5	0.5	200	NO	NO
48	Carbon Tetrachloride	ND	ug/L	0.5	0.5	5	NO	NO
49	Benzene	ND	ug/L	0.5	0.5	5	NO	NO
50	1,2 - Dichloroethane	ND	ug/L	0.5	0.5	5	NO	NO
51	Trichloroethylene	ND	ug/L	0.5	0.5	5	NO	NO
52	1,4 - Dichlorobenzene	ND	ug/L	0.5	0.5	75	NO	NO
56	Dichloromethane	ND	ug/L	0.5	0.5	5	NO	NO
57	trans-1,2 - Dichloroethylene	ND	ug/L	0.5	0.5	100	NO	NO
60	cis-1,2 - Dichloroethylene	ND	ug/L	0.5	0.5	70	NO	NO
63	1,2 - Dichloropropane	ND	ug/L	0.5	0.5	5	NO	NO
66	Toluene	ND	ug/L	0.5	0.5	1000	NO	NO
67	1,1,2 - Trichloroethane	ND	ug/L	0.5	0.5	5	NO	NO
68	Tetrachloroethylene	ND	ug/L	0.5	0.5	5	NO	NO
71	Chlorobenzene	ND	ug/L	0.5	0.5	100	NO	NO
73	Ethylbenzene	ND	ug/L	0.5	0.5	700	NO	NO
76	Styrene	ND	ug/L	0.5	0.5	100	NO	NO
84	1,2 - Dichlorobenzene	ND	ug/L	0.5	0.5	600	NO	NO
95	1,2,4 - Trichlorobenzene	ND	ug/L	0.5	0.5	70	NO	NO
160	Total Xylenes	ND	ug/L	0.5	0.5	10000	NO	NO
74	m/p Xylenes (MCL for Total)	ND	ug/L	0.5	0.5		NO	
75	o - Xylene (MCL for Total)	ND	ug/L	0.5	0.5		NO	
	TRIHALOMETHANES							
27	Chloroform	ND	ug/L	0.5	0.5		NO	
[illegible]	Bromodichloromethane	ND	ug/L	0.5	0.5		NO	
29	Chlorodibromomethane	ND	ug/L	0.5	0.5		NO	
30	Bromoform	ND	ug/L	0.5	0.5		NO	
31	TOTAL Trihalomethanes	ND	ug/L	NA	NA	80		NO

Lab/Sample No.: 08971322 **VOC ANALYSIS REPORT - METHOD 524.2**

Water Management Laboratories, Inc.
1515 80th St. E.
Tacoma, WA 98404
(253) 531-3121

DOH #	ANALYTES	RESULTS	UNITS	SRL	TRIGGER	MCL	EXCEEDS	
EPA UNREGULATED (Continued)							Trigger?	MCL?
53	Chloromethane	**ND**	ug/L	0.5	0.5		NO	
54	Bromomethane	**ND**	ug/L	0.5	0.5		NO	
58	1,1 - Dichloroethane	**ND**	ug/L	0.5	0.5		NO	
72	1,1,1,2 - Tetrachlroroethane	**ND**	ug/L	0.5	0.5		NO	
78	Bromobenzene	**ND**	ug/L	0.5	0.5		NO	
79	1,2,3 - Trichloropropane (Confirm by 504.1)	**ND**	ug/L	0.5	0.5		NO	
81	o - Chlorotoluene	**ND**	ug/L	0.5	0.5		NO	
85	Fluorotrichloromethane	**ND**	ug/L	0.5	0.5		NO	
86	Bromochloromethane	**ND**	ug/L	0.5	0.5		NO	
89	1,3,5 - Trimethylbenzene	**ND**	ug/L	0.5	0.5		NO	
91	1,2,4 - Trimethylbenzene	**ND**	ug/L	0.5	0.5		NO	
92	s - Butylbenzene	**ND**	ug/L	0.5	0.5		NO	
93	p - Isopropyltoluene	**ND**	ug/L	0.5	0.5		NO	
94	n - Butylbenzene	**ND**	ug/L	0.5	0.5		NO	
96	Napthalene	**ND**	ug/L	0.5	0.5		NO	
102	EDB (Confirm by 504.1)	**ND**	ug/L	0.5	0.5		NO	
103	DBCP (Confirm by 504.1)	**ND**	ug/L	0.5	0.5		NO	
2	Dichlorodifluoromethane	**ND**	ug/L	0.5	0.5		NO	
A	MTBE	**ND**	ug/L	0.5	0.5		NO	

NOTES:

SRL (State Reporting Level): Indicates the minimum reporting level required by the Washington Department of Health (DOH).

Trigger Level: DOH Drinking Water response level. Systems with compounds detected at concentrations in excess of this level may need to take additional samples. Contact your regional DOH office for further information.

MCL (Maximum Contaminant Level): If the contaminant amount exceeds the MCL, immediately contact your regional DOH office.

NA (Not Analyzed): In the RESULTS column indicates this compound was not included in the current analysis.

ND (Not Detected): In the RESULTS column indicates this compound was analyzed and not detected at a level greater than or equal to the SRL.

< : Indicates less than.

Comments:

A maximum contaminant level of 80 ug/L total Trihalomethanes (Compounds 27-30) is allowed.

Method 524.2: VOC's

ATTACHMENT A

WATER
MANAGEMENT
LABORATORIES INC.

1515 80th St. E.
Tacoma, WA 98404
(253) 531-3121

Well #3 – 2012

VOLATILE ORGANIC CHEMICALS (VOC's) ANALYSIS REPORT
EPA TEST METHOD - EPA 524.2
WA DOH TEST PANEL: VOC1

System ID No.: 75560Q

System Name: Sallal Water Association

Lab/Sample No.: 08971321

Date Collected: 04/11/12

DOH Source No.: S03

Multiple Source Nos.: N/A

Sample Type: B

Sample Purpose: C

Date Received: 04/11/12

Date Analyzed: 04/17/12

Analyst: LHL

Date Reported: 04/18/12

Supervisor:

County: King

Group: A

Sample Location: Edgewick Well #3, Inside Well Bldg., Hosebib

Send To: Sallal Water Association
PO Box 378
North Bend, WA 98045

Remarks:

DOH #	ANALYTES	RESULTS	UNITS	SRL	TRIGGER	MCL	EXCEEDS	
		EPA REGULATED					Trigger?	MCL?
5	Vinyl Chloride	ND	ug/L	0.5	0.5	2	NO	NO
6	1,1 - Dichloroethylene	ND	ug/L	0.5	0.5	7	NO	NO
47	1,1,1 - Trichloroethane	ND	ug/L	0.5	0.5	200	NO	NO
48	Carbon Tetrachloride	ND	ug/L	0.5	0.5	5	NO	NO
49	Benzene	ND	ug/L	0.5	0.5	5	NO	NO
50	1,2 - Dichloroethane	ND	ug/L	0.5	0.5	5	NO	NO
51	Trichloroethylene	ND	ug/L	0.5	0.5	5	NO	NO
52	1,4 - Dichlorobenzene	ND	ug/L	0.5	0.5	75	NO	NO
56	Dichloromethane	ND	ug/L	0.5	0.5	5	NO	NO
57	trans-1,2 - Dichloroethylene	ND	ug/L	0.5	0.5	100	NO	NO
60	cis-1,2 - Dichloroethylene	ND	ug/L	0.5	0.5	70	NO	NO
63	1,2 - Dichloropropane	ND	ug/L	0.5	0.5	5	NO	NO
66	Toluene	ND	ug/L	0.5	0.5	1000	NO	NO
67	1,1,2 - Trichloroethane	ND	ug/L	0.5	0.5	5	NO	NO
68	Tetrachloroethylene	ND	ug/L	0.5	0.5	5	NO	NO
71	Chlorobenzene	ND	ug/L	0.5	0.5	100	NO	NO
73	Ethylbenzene	ND	ug/L	0.5	0.5	700	NO	NO
76	Styrene	ND	ug/L	0.5	0.5	100	NO	NO
84	1,2 - Dichlorobenzene	ND	ug/L	0.5	0.5	600	NO	NO
95	1,2,4 - Trichlorobenzene	ND	ug/L	0.5	0.5	70	NO	NO
160	Total Xylenes	ND	ug/L	0.5	0.5	10000	NO	NO
74	m/p Xylenes (MCL for Total)	ND	ug/L	0.5	0.5		NO	
75	o - Xylene (MCL for Total)	ND	ug/L	0.5	0.5		NO	
		TRIHALOMETHANES						
27	Chloroform	ND	ug/L	0.5	0.5		NO	
8	Bromodichloromethane	ND	ug/L	0.5	0.5		NO	
29	Chlorodibromomethane	ND	ug/L	0.5	0.5		NO	
30	Bromoform	ND	ug/L	0.5	0.5		NO	
31	TOTAL Trihalomethanes	ND	ug/L	NA	NA	80		NO

ATTACHMENT A

Lab/Sample No.: 08971321 **VOC ANALYSIS REPORT - METHOD 524.2** **page 2**

Water Management Laboratories, Inc.
1515 80th St. E.
Tacoma, WA 98404
(253) 531-3121

DOH #	ANALYTES	RESULTS	UNITS	SRL	TRIGGER	MCL	EXCEEDS	
EPA UNREGULATED (Continued)							Trigger?	MCL?
53	Chloromethane	**ND**	ug/L	0.5	0.5		NO	
54	Bromomethane	**ND**	ug/L	0.5	0.5		NO	
58	1,1 - Dichloroethane	**ND**	ug/L	0.5	0.5		NO	
72	1,1,1,2 - Tetrachlroroethane	**ND**	ug/L	0.5	0.5		NO	
78	Bromobenzene	**ND**	ug/L	0.5	0.5		NO	
79	1,2,3 - Trichloropropane (Confirm by 504.1)	**ND**	ug/L	0.5	0.5		NO	
81	o - Chlorotoluene	**ND**	ug/L	0.5	0.5		NO	
85	Fluorotrichloromethane	**ND**	ug/L	0.5	0.5		NO	
86	Bromochloromethane	**ND**	ug/L	0.5	0.5		NO	
89	1,3,5 - Trimethylbenzene	**ND**	ug/L	0.5	0.5		NO	
91	1,2,4 - Trimethylbenzene	**ND**	ug/L	0.5	0.5		NO	
92	s - Butylbenzene	**ND**	ug/L	0.5	0.5		NO	
93	p - Isopropyltoluene	**ND**	ug/L	0.5	0.5		NO	
94	n - Butylbenzene	**ND**	ug/L	0.5	0.5		NO	
96	Napthalene	**ND**	ug/L	0.5	0.5		NO	
102	EDB (Confirm by 504.1)	**ND**	ug/L	0.5	0.5		NO	
103	DBCP (Confirm by 504.1)	**ND**	ug/L	0.5	0.5		NO	
162	Dichlorodifluoromethane	**ND**	ug/L	0.5	0.5		NO	
A	MTBE	**ND**	ug/L	0.5	0.5		NO	

NOTES:

SRL (State Reporting Level): Indicates the minimum reporting level required by the Washington Department of Health (DOH).

Trigger Level: DOH Drinking Water response level. Systems with compounds detected at concentrations in excess of this level may need to take additional samples. Contact your regional DOH office for further information.

MCL (Maximum Contaminant Level): If the contaminant amount exceeds the MCL, immediately contact your regional DOH office.

NA (Not Analyzed): In the RESULTS column indicates this compound was not included in the current analysis.

ND (Not Detected): In the RESULTS column indicates this compound was analyzed and not detected at a level greater than or equal to the SRL.

< : Indicates less than.

Comments:

A maximum contaminant level of 80 ug/L total Trihalomethanes (Compounds 27-30) is allowed.

Method 524.2: VOC's

APPENDIX G

COLIFORM MONITORING PLAN

Coliform Monitoring Plan for: Sallal Water Association

A. System Information **Plan Date:** February 2020

Water System Name Sallal Water Association	**County** King	**System I.D. Number** 75560
Name of Plan Preparer Ted Stonebridge	**Position** General Manager	**Daytime Phone** 425-888-3650
Sources: DOH Source Number, Source Name, Well Depth, Pumping Capacity	1) S01, Well #1, depth – 340 ft, 800 gpm 2) SO2, Well #2, depth – 197 ft, 1,000 gpm 3) SO3, Well #3, depth – 255 ft, 91 gpm 4) SO4, Well #4, depth – 175, 1,200 gpm	
Storage: List and Describe	1) Rattlesnake Reservoir #1 – pre-cast concrete, 197,000 gal 2) Rattlesnake Reservoir #2 – pre-cast concrete, 244,000 gal 3) Uplands Reservoir – pre-cast concrete, 149,000 gal 4) Edgewick Reservoir #1 – pre-cast concrete, 217,000 gal 5) Edgewick Reservoir #2 – pre-cast concrete, 131,000 gal 6) Edgewick Reservoir #3 – pre-cast concrete, 131,000 gal 7) Middle Fork Reservoir #1 – pre-cast concrete, 184,000 gal 8) Middle Fork Reservoir #2 – pre-cast concrete, 184,000 gal 9) River Point Reservoir – pre-cast concrete, 158,000 gal 10) Terrel Reservoir – pre-cast concrete, 157,000 gal	
Treatment: Source Number & Process	SO1, SO3 - Chlorination	

Pressure Zones: Number and name	16 zones – 710, 793,840,872, 883, 900, 903,920, 956, 1009, 1054, 1085, 0186, 1100, 1156, 1215
Population by Pressure Zone	Unknown, total population served @ 5,600
Number of Routine Samples Required Monthly by Regulation:	7
Number of Sample Sites Needed to Represent the Distribution System:	27
***Request DOH Approval of Triggered Source Monitoring Plan?**	**Yes** ☐ **No** ☒

*If approval is requested a fee will be charged for the review.

B. Laboratory Information

Laboratory Name Water Management Laboratory	**Office Phone 253-531-3121** After Hours Phone - -
Address 1515 80th St E, Tacoma, WA 98404	**Cell Phone** - - **Email**
Hours of Operation Mon-Fri: 8am-5pm, Sat: 9am -12pm, Closed Sunday	
Contact Name Krist Holmes- Garretson - owner	
Emergency Laboratory Name AM Test Laboratory	**Office Phone 425-855-1664** After Hours Phone - -
Address 13600 NE 126th Pl # C, Kirkland, WA 98034	**Cell Phone** - - **Email**
Hours of Operation Mon-Fri: 7am-5pm	
Contact Name Aaron Young – Lab/project manager	

C. Wholesaling of Groundwater

	Yes	No
We are a consecutive system and purchase groundwater from another water system.	☐	☒
If yes, Water System Name: Contact Name: Telephone Numbers Office - - After Hours - -		
We sell groundwater to other public water systems.	☒	☐
If yes, Water System Name: Wilderness Rim Association Contact Name: Roger Lillijord Telephone Numbers Office 425-888-0087 After Hours - -		
If yes, Water System Name: Contact Name: Telephone Numbers Office - - After Hours - -		
If yes, Water System Name: Contact Name: Telephone Numbers Office - - After Hours - -		
If yes, Water System Name: Contact Name: Telephone Numbers Office - - After Hours - -		
If yes, Water System Name: Contact Name: Telephone Numbers Office - - After Hours - -		

D. Routine, Repeat, and Triggered Source Sample Locations*

Location/Address for **Routine** Sample Sites	Location/Address for **Repeat** Sample Sites	Groundwater Sources for **Triggered Sample Sites****
X1. Station #1 12821 470th Ave SE (Jan, May, Sept)	1-1. 12702 SE 470th Ave 1-2. 12821 470th Ave SE 1-3. 47008 SE 129th St	S01 S02 S03 S___ S___
X2. Station #2 43520 Se North Bend Way (Jan, May, Sept)	2-1. 42530 SE North Bend Wy 2-2. 43520 SE North Bend Wy 2-3. 43504 SE North Bend Wy	S01 S02 S03 S___ S___
X3. Station #9 18000 Cedar Falls Rd (Jan, May, Sept)	3-1. 17727 SE Cedar Falls Rd 3-2. 18000 SE Cedar Falls Rd 3-3. Watershed Tank Site	S01 S02 S03 S___ S___
X4. Station #17 43410 152nd Pl (Jan, May, Sept)	4-1. 43402 SE 152nd Pl 4-2. 43410 SE 152nd Pl 4-3. 43508 SE 152nd Pl	S01 S02 S03 S___ S___

Location/Address for **<u>Routine</u> Sample Sites**	Location/Address for **<u>Repeat</u> Sample Sites**	Groundwater Sources for **Triggered Sample Sites****
X5. Station #7 45414 Se Tanner Rd (Jan, May, Sept)	5-1. 45126 SE Tanner Rd 5-2. 45414 SE Tanner Rd 5-3. 45012 SE Tanner Rd	S01 S02 S03 S___ S___
X6. Station #5 15640 Edgewick Rd (Jan, May, Sept)	6-1. 46813 SE 160th St 6-2. 15604 Edgewick Rd 6-3. 46819 SE 154th Ct	S01 S02 S03 S___ S___
X7. Station #24 15903 441st Pl SE (Jan, May, Sept)	7-1. 44420 SE 159th St 7-2. 15903 441st Pl SE 7-3. 15923 441st Pl SE	S01 S02 S03 S___ S___
X8. Station #8 43232 SE 177th St (Feb, June, Oct)	8-1. 17727 SE Cedar Falls Rd 8-2. 43232 SE 177th St 8-3. 17633 SE Cedar Falls Rd	S01 S02 S03 S___ S___

Location/Address for **Routine** **Sample Sites**	Location/Address for **Repeat** **Sample Sites**	Groundwater Sources for **Triggered Sample Sites****
X9. Station #20	9-1. 12816 464th Ave SE 9-2. 12810 464th Ave SE 9-3. 12527 464th Ave SE	S01 S02 S03 S___ S___
12810 464th Ave SE (Feb, June, Oct)		
X10. Station #19	10-1. 43006 SE 149th St 10-2. 43018 SE 149th St 10-3. 43224 SE 149th St	S01 S02 S03 S___ S___
43018 SE 149th (Feb, June, Oct)		
X11. Station #11	11-1. 44325 SE 136th St 11-2. 44217 SE 136th St 11-3. 44121 SE 136th St	S01 S02 S03 S___ S___
44217 SE 136th St (Feb, June, Oct)		
X12. Station #4	12-1. 15829 477th Ave SE 12-2. 15623 477th Ave SE 12-3. 15535 477th Ave SE	S01 S02 S03 S___ S___
15623 477th Ave SE (Feb, June, Oct)		

Location/Address for **Routine Sample Sites**	Location/Address for **Repeat Sample Sites**	Groundwater Sources for **Triggered Sample Sites****
X13. Station #22 44217 SE 136th St (Feb, June, Oct)	13-1. 1642 Eagles Nest Pl 13-2. 1653 Eagles Nest Pl 13-3. 13808 453rd Pl SE	S01 S02 S03 S___ S___
X14. Home Site 15535 417th Pl SE (Feb, June, Oct)	14-1. 15548 417th PL SE 14-2. 15535 417th Pl SE 14-3. 15422 417th Pl SE	S01 S02 S03 S___ S___
X15. Station #21 16307 Reserve Dr SE (March July, Nov)	15-1. 16307 Reserve Dr 15-2. 16307 Reserve Dr SE 15-3. 16233 419th Ct SE	S01 S02 S03 S___ S___
X16. Station #15 15623 477th Ave SE (Feb, June, Oct)	16-1. 15829 477th Ave SE 16-2. 15623 477th Ave SE 16-3. 15535 477th Ave SE	S01 S02 S03 S___ S___

Location/Address for **<u>Routine</u> Sample Sites**	Location/Address for **<u>Repeat</u> Sample Sites**	Groundwater Sources for **Triggered Sample Sites****
X17. Station #13	17-1. 12909 456th Dr SE 17-2. 12934 456th Dr SE 17-3. 12943 456th Dr SE	S01 S02 S03 S___ S___
12934 456th Dr SE (March, July, Nov)		
X18. Station #18	18-1. 46034 SE 137th St 18-2. 43200 SE 163rd St 18-3. 46114 SE 137th St	S01 S02 S03 S___ S___
46106 SE 137th St (March, July, Nov)		
X19. Station #23	19-1. 45057 SE 166th St 19-2. 45008 SE 166th St 19-3. 45112 SE 166th St	S01 S02 S03 S___ S___
45008 SE 166th St (March, July, Nov)		
X20. Station #12	20-1. 12003 434th Ave SE 20-2. 12023 434th Ave SE 20-3. 12033 434th Ave SE	S01 S02 S03 S___ S___
12023 434th Ave SE (March, July, Nov)		

Location/Address for **<u>Routine</u> Sample Sites**	Location/Address for **<u>Repeat</u> Sample Sites**	Groundwater Sources for **Triggered Sample Sites****
X21. Station #6 47527 SE Middle Fork (March, July, Nov)	21-1. 13892 473rd Ct 21-2. 47527 SE Middle Fork 21-3. 47539 SE 177th St	S01 S02 S03 S___ S___
X22. Home Site 12714 469th Ave SE (April, Aug, Dec)	22-1. 46913 SE 127th St 22-2. 12714 469th Ave SE 22-3. 46912 SE 130th St	S01 S02 S03 S___ S___
X23. Home Site 15524 451st Ave SE (April, Aug, Dec)	23-1. 15704 451st Ave SE 23-2. 15524 451st Ave SE 23-3. 15509 451st Ave SE	S01 S02 S03 S___ S___
X24. Home Site 15424 Uplands Way (April, Aug, Dec)	24-1. 15418 Uplands Way 24-2. 15424 Uplands Way 24-3. 15622 Uplands Way	S01 S02 S03 S___ S___

Location/Address for **Routine Sample Sites**	Location/Address for **Repeat Sample Sites**	Groundwater Sources for **Triggered Sample Sites****
X25. Station #3 42331 430th Ave SE (April, Aug, Dec)	25-1. 42323 SE 149th Pl 25-2. 42331 430th Ave SE 25-3. 14955 430th Ave SE	S01 S02 S03 S___ S___
X26. Station #25 15425 Uplands Reserve Dr (April, Aug, Dec)	26-1. 15425 Reserve Dr 26-2. 15425 Reserve Dr 26-3. 15102 Reserve Dr	S01 S02 S03 S___ S___
X27. Station #16 432nd & SE 140th St (April, Aug, Dec)	27-1. 13819 432nd Ave SE 27-2. 432nd & SE 140th St 27-3. 43230 SE 140th St	S01 S02 S03 S___ S___
X28. Home Site 47320 SE 144th St (April, Aug, Dec)	28-1. 47030 SE 144th St 28-2. 47320 SE 144th St 28-3. 47418 SE 144th St	S01 S02 S03 S___ S___

Location is between
#15425 and #15102

*NOTE: If you need more than three routine samples to cover the distribution system, attach additional sheets as needed.

** When you collect the repeats, you must sample every groundwater source that was in use when the original routine sample was collected.

Important Notes for Sample Collector:

NOTE:
If there is a bacteriological sample that is positive at Wilderness Rim, Wilderness Rim is obliged to inform Sallal for the purposes of follow-up sampling from the wells within 24- hours.

Water Sampling Technique

Sallal Water Association

Procedure to collect samples from designated sample stations or acceptable hose bibs at home sites.

1. Wash hands carefully with soap and water before collecting.
2. Disinfect the end of the faucet with a bleach solution (mix 1 part bleach to 4 parts water)
3. Allow water to run for 5 minutes before adjusting the flow to a stream about the width of a pencil.
4. Take a sample and check chlorine residual and document the result on the coliform bacteria analysis form.
5. Take the cap off the bottle and hold the cap in one had and the bottle in the other.
6. Carefully fill the bottle within ½" of the top without over filling. Replace cap without touching the inside of cap or the lip of the bottle.
7. Fill out the Coliform Bacteria Analysis Form with Date, Time, County, Type of System, System Name, System ID#, Sample Location, Sample Collected by, Chlorine residual, and contact information.
8. Place completed water sample in cooler with an ice pack and deliver to lab.

E. Reduced Triggered Source Monitoring

Justification (add sheets as needed):

F. Routine Sample Rotation Schedule

Month	Routine Site(s)	Month	Routine Site(s)
January	7	July	6
February	7	August	6
March	7	September	7
April	7	October	7
May	7	November	7
June	7	December	7

G. Level 1 and Level 2 Assessment Contact Information

Name **Denny Scott**	**Office Phone 425-888-3650** **After Hours Phone 360-972-4804**
Address **44021 SE Tanner Rd Ste E** **North Bend, WA 98045**	**Email: denny@sallal.com**
Name **Tree Bergman**	**Office Phone 425-888-3650** **After Hours Phone 360-972-4804**
Address **44021 SE Tanner Rd Ste E** **North Bend, WA 98045**	**Email ted@sallal.com**

H. *E. coli*-Present Sample Response

Distribution System E. coli Response Checklist

Background Information	**Yes**	**No**	**N/A**	**To Do List**
We inform staff members about activities within the distribution system that could affect water quality.	☒	☐	☐	☐
We document all water main breaks, construction & repair activities, and low pressure and outage incidents.	☒	☐	☐	☐
We can easily access and review documentation on water main breaks, construction & repair activities, and low pressure and outage incidents.	☒	☐	☐	☐
Our Cross-Connection Control Program is up-to-date.	☒	☐	☐	☐
We test all cross-connection control devices annually as required, with easy access to the proper documentation.	☒	☐	☐	☐
We routinely inspect all treatment facilities for proper operation.	☒	☐	☐	☐
We identified one or more qualified individuals who are able to conduct a Level 2 assessment of our water system.	☒	☐	☐	☐
We have procedures in place for disinfecting and flushing the water system if it becomes necessary.	☒	☐	☐	☐
We can activate an emergency intertie with an adjacent water system in an emergency.	☒	☐	☐	☐
We have a map of our service area boundaries.	☒	☐	☐	☐
We have consumers who may not have access to bottled or boiled water.	☒	☐	☐	☐
There is a sufficient supply of bottled water immediately available to our customers who are unable to boil their water.	☒	☐	☐	☐
We have identified the contact person at each day care, school, medical facility, food service, and other customers who may have difficulty responding to a Health Advisory.	☒	☐	☐	☐
We have messages prepared and translated into different languages to ensure our consumers will understand them.	☒	☐	☐	☐
We have the capacity to print and distribute the required number of notices in a short time period.	☒	☐	☐	☐
We have discussed the issue of E. coli-present sample results with our policy makers.	☒	☐	☐	☐
If we find E. coli in a routine distribution sample, the policy makers want to wait until repeat test results are available before issuing advice to water system customers.	☒	☐	☐	☐

(Cont.)

Distribution System E. coli Response Checklist

Potential Public Notice Delivery Methods	Yes	No	N/A	To Do List
It is feasible to deliver a notice going door-to-door.	☒	☐	☐	☐
We have a list of all of our customers' addresses.	☒	☐	☐	☐
We have a list of customer telephone numbers or access to a Reverse 9-1-1 system.	☒	☐	☐	☐
We have a list of customer email addresses.	☒	☐	☐	☐
We encourage our customers to remain in contact with us using social media.	☐	☐	☒	☐
We have an active website we can quickly update to include important messages.	☒	☐	☐	☐
Our customers drive by a single location where we could post an advisory and expect everyone to see it.	☒	☐	☐	☐
We need a news release to supplement our public notification process.	☒	☐	☐	☐

Distribution System *E. coli* Response Plan

If we have *E. coli* in our distribution system we will immediately:

1. Call DOH.
2. Collect repeat and triggered source samples per Part D. Collect additional investigative samples as necessary.
3. Discuss with DOH whether to issue a Health Advisory based on the findings of steps 1-2.

ATTACHMENT A

E. coli-Present Triggered Source Sample Response Checklist – All Sources

Background Information	**Yes**	**No**	**N/A**	**To Do List**
We review our sanitary survey results and respond to any recommendations affecting the microbial quality of our water supply.	☒	☐	☐	☐
We address any significant deficiencies identified during a sanitary survey.	☒	☐	☐	☐
There are contaminant sources within our Wellhead Protection Area that could affect the microbial quality of our source water, and If yes, we can eliminate them.	☐ ☐	☒ ☐	☐ ☐	☐ ☐
We routinely inspect our well site(s).	☒	☐	☐	☐
We have a good raw water sample tap installed at each source.	☒	☐	☐	☐
After we complete work on a source, we disinfect the source, flush, and collect an investigative sample.	☒	☐	☐	☐
Public Notice	**Yes**	**No**	**N/A**	**To Do List**
We discussed the requirement for immediate public notice of an E. coli-present source sample result with our water system’s governing body (board of directors or commissioners) and received direction from them on our response plan.	☒	☐	☐	☐
We discussed the requirement for immediate public notice of an E. coli-present source sample result with our wholesale customers and encouraged them to develop a response plan.	☒	☐	☐	☐
We have prepared templates and a communications plan that will help us quickly distribute our messages.	☒	☐	☐	☐

E. coli-Present Triggered Source Sample Response Checklist – Source S__*

Alternate Sources	**Yes**	**No**	**N/A**	**To Do List**
We can stop using this source and still provide reliable water service to our customers.	☒	☐	☐	☐
We have an emergency intertie with a neighboring water system that we can use until corrective action is complete (perhaps for several months).	☒	☐	☐	☐
We can provide bottled water to all or part of the distribution system for an indefinite period.	☒	☐	☐	☐
We can quickly replace our existing source of supply with a more protected new source.	☐	☒	☐	☐
Temporary Treatment	**Yes**	**No**	**N/A**	**To Do List**
This source is continuously chlorinated, and our existing facilities can provide 4-log virus treatment (CT = 6) before the first customer. If yes, at what concentration? _____ mg/L	☐	☐	☐	☒
We can quickly introduce chlorine into the water system and take advantage of the existing contact time to provide 4-log virus treatment to a large portion of the distribution system.	☐	☐	☐	☒
We can reduce the production capacity of our pumps or alter the configuration of our storage quantities (operational storage) to increase the amount of time the water stays in the system before the first customer to achieve CT = 6.	☐	☒	☐	☐
We can alter the demand for drinking water (maximum day or peak hour) through conservation messages to increase the time the water is in the system prior to the first customer in order to achieve 4-log virus treatment with chlorine.	☐	☒	☐	☐

*NOTE: If your system has multiple sources, you may want to complete a separate checklist for each source.

E. coli-Present Triggered Source Sample Response Plan – Source ___

If we have E. coli in Source ___ water we will immediately:

1. Call DOH.
2. Collect repeat and triggered source samples per Part D. Collect additional investigative samples as necessary.
3. Discuss with DOH whether to issue a Health Advisory based on the findings of steps 1-2.

ATTACHMENT A

I. System Map

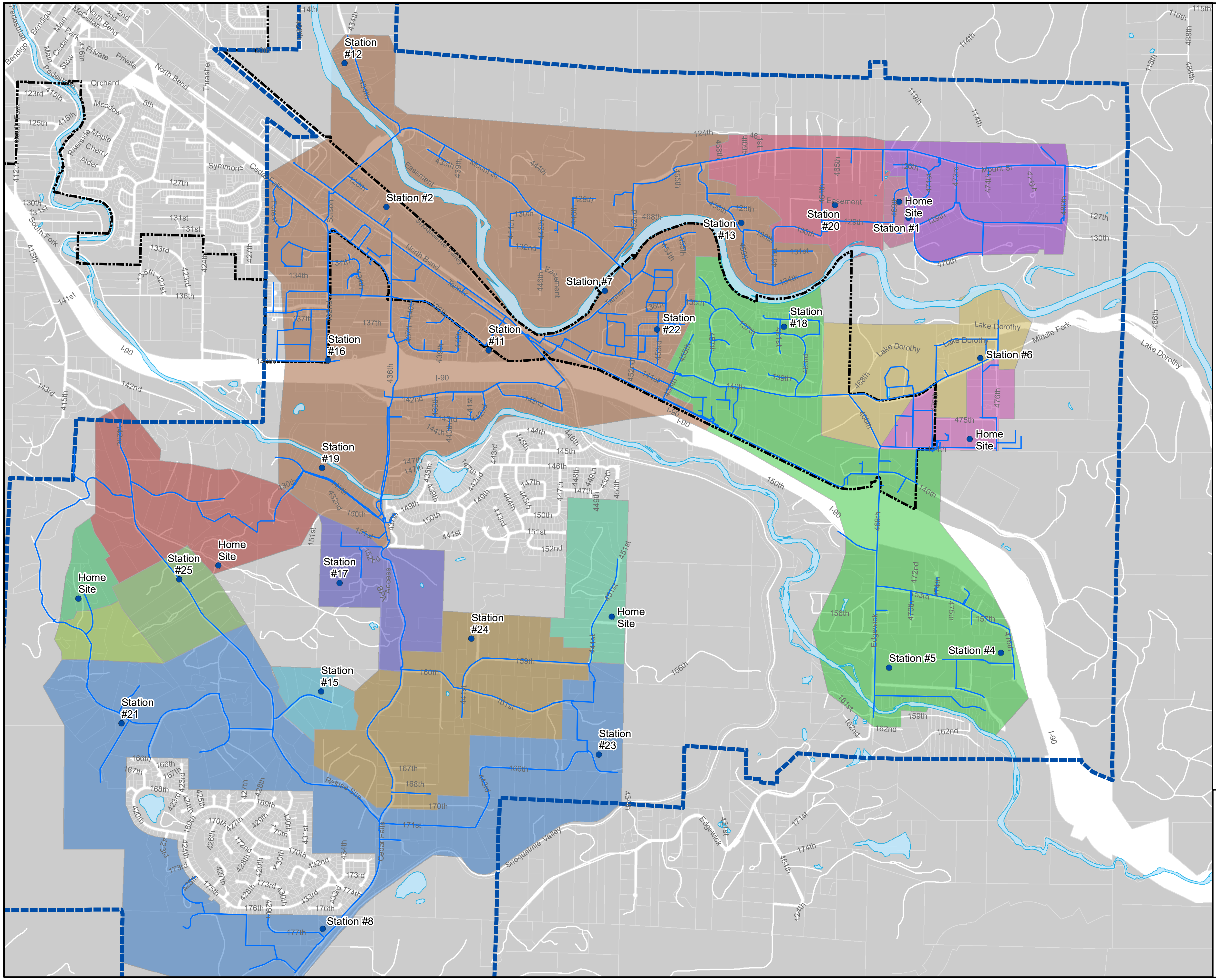

ATTACHMENT A

Legend

● COLIFORM MONITORING STATIONS

PIPES

SALLAL SERVICE AREA

CITY OF NORTHBEND

KING COUNTY PARCELS

PRESSURE ZONES

1009	793-S
1054	840
1087	872
1090	883
1100	903
1159	904
1215	920
701	959

Source: King County GIS

N

0 2,000 4,000

Scale in Feet

SALLAL WATER ASSOC.

FIG 1-5
COLIFORM MONITORING STATIONS

Gray & Osborne, Inc.
CONSULTING ENGINEERS

M:\Sallal\20407 Gen Engr 2020\GIS\COLIFORM.mxd

APPENDIX H

HYDRAULIC MODELING

2040 Peak Hour Demand

ID	Demand (gpm)	Elevation (ft)	Head (ft)	Pressure (psi)
J10	9.63	1,045.00	1,191.50	63.48
J-10	3.99	500	705.41	89.01
J100	0	749	881.08	57.23
J-100	1.81	1,080.00	1,202.79	53.2
J-1000	0	590	712.05	52.88
J-1002	0	780	881.08	43.8
J-1006	0	809.39	1,043.04	101.24
J-1018	0	930	1,199.27	116.68
J102	0	920	1,198.74	120.78
J-102	1.81	1,080.00	1,204.50	53.95
J-1020	0	930	1,199.30	116.69
J-1022	0	930	1,199.30	116.69
J-1024	0	570	700.67	56.62
J-104	1.81	1,040.00	1,207.06	72.39
J-106	1.81	1,040.00	1,209.49	73.44
J-1062	0	640	791.93	65.83
J-1064	0	520	712.06	83.22
J-1066	0	530	710.98	78.42
J-1072	0	750	975.42	97.67
J-1074	0	750	975.42	97.67
J-1076	0	750	975.42	97.67
J-1078	0	750	975.42	97.67
J-108	1.81	1,050.00	1,209.49	69.11
J-1080	0	750	975.42	97.67
J-1090	0	750	931	78.43
J-1092	0	750	975.42	97.67
J-1094	0	750	975.42	97.67
J-1096	0	750	975.42	97.67
J-1098	0	750	931	78.43
J-110	1.81	1,040.00	1,211.36	74.25
J112	0	698.7	975.42	119.9
J-112	1.81	1,030.00	1,211.36	78.58
J114	0	738	975.42	102.87
J-114	1.81	1,020.00	1,211.35	82.91
J116	0	715	975.42	112.84
J-116	1.81	1,000.00	1,211.35	91.58
J118	0	745	975.42	99.84
J-118	1.81	1,000.00	1,211.35	91.58
J-12	3.99	510	705.47	84.7
J120	0	755	975.42	95.51
J-120	0	974	1,094.01	52
J122	0	740	975.42	102.01
J-122	1.81	920	1,094.01	75.4
J124	0	740	975.42	102.01

ID	Demand (gpm)	Elevation (ft)	Head (ft)	Pressure (psi)
J-124	1.81	910	1,094.01	79.73
J126	0	738	975.42	102.87
J-126	1.81	900	1,094.01	84.06
J128	0	938	1,196.73	112.11
J-128	1.81	865	1,094.01	99.23
J-130	1.81	1,070.00	1,212.97	61.95
J132	9.63	990	1,190.00	86.66
J134	9.63	1,000.00	1,189.10	81.94
J-134	1.81	1,080.00	1,202.79	53.2
J136	9.63	955	1,189.09	101.43
J-136	1.81	1,050.00	1,202.79	66.2
J138	9.63	955	1,189.23	101.49
J-138	2.35	950	1,199.62	108.16
J-14	3.99	510	705.49	84.7
J140	9.63	975	1,189.33	92.87
J-140	2.35	920	1,198.90	120.85
J142	9.63	990	1,189.52	86.45
J-142	2.35	950	1,197.58	107.27
J144	9.63	995	1,189.89	84.45
J-144	2.35	950	1,197.48	107.23
J146	9.63	965	1,189.77	97.39
J-146	2.35	933	1,197.32	114.53
J148	9.63	995	1,189.90	84.45
J-148	2.35	950	1,197.32	107.16
J150	9.63	970	1,189.79	95.23
J-150	2.35	930	1,197.32	115.83
J152	9.63	1,025.00	1,188.12	70.68
J-152	2.35	930	1,197.33	115.83
J154	9.63	985	1,189.00	88.39
J-154	2.35	930	1,197.34	115.84
J156	9.63	1,015.00	1,188.97	75.38
J-156	2.35	920	1,197.86	120.4
J158	9.63	1,025.00	1,188.99	71.06
J-158	2.35	960	1,196.99	102.69
J-16	3.99	500	705.33	88.97
J160	9.63	1,035.00	1,189.05	66.75
J-160	201.7	1,010.00	1,196.39	80.76
J162	9.63	1,045.00	1,190.07	62.86
J-162	2.35	920	1,198.74	120.78
J164	9.63	1,000.00	1,189.09	81.93
J-164	0	928.52	1,199.23	117.3
J166	9.63	1,015.00	1,188.43	75.15
J-166	2.35	1,070.00	1,201.50	56.98
J168	9.63	1,020.00	1,187.80	72.71

ID	Demand (gpm)	Elevation (ft)	Head (ft)	Pressure (psi)
J170	9.63	1,020.00	1,187.78	72.7
J172	9.63	1,025.00	1,187.67	70.49
J-172	0	966.18	1,199.23	100.98
J174	9.63	1,035.00	1,187.68	66.16
J-174	2.35	930	1,197.34	115.84
J176	9.63	1,045.00	1,187.74	61.85
J-176	2.35	590	894.56	131.96
J178	9.63	1,055.00	1,187.73	57.51
J-178	1.81	1,060.00	1,209.49	64.77
J18	0	828	975.42	63.88
J-18	3.99	510	705.05	84.51
J180	9.63	1,055.00	1,187.74	57.52
J-180	3.99	500	705.41	89.01
J182	9.63	1,020.00	1,187.53	72.59
J-182	2.35	969	1,197.25	98.9
J184	9.63	1,025.00	1,187.52	70.42
J-184	2.35	975	1,197.19	96.27
J186	9.63	995	1,187.78	83.53
J-186	2.35	940	1,197.14	111.42
J188	9.63	995	1,187.75	83.52
J-188	2.35	1,030.00	1,197.08	72.4
J190	9.63	1,020.00	1,187.44	72.55
J-190	2.35	1,070.00	1,197.03	55.04
J192	9.63	1,015.00	1,187.44	74.72
J-192	2.35	1,070.00	1,196.97	55.02
J194	9.63	955	1,197.17	104.93
J-194	2.35	1,030.00	1,196.92	72.32
J196	9.63	995	1,189.52	84.29
J-196	2.35	930	1,196.85	115.63
J198	9.63	965	1,189.76	97.39
J-198	2.35	890	1,196.85	132.96
J20	0	947	1,043.23	41.7
J-20	3.99	510	704.79	84.4
J200	9.63	965	1,189.76	97.39
J-200	2.35	960	1,196.79	102.6
J202	9.63	970	1,189.76	95.22
J-202	2.35	930	1,196.76	115.59
J204	9.63	1,005.00	1,189.79	80.07
J-204	0	951	1,043.31	40
J206	9.63	995	1,189.88	84.44
J-206	2.35	900	1,043.12	62.01
J208	9.63	995	1,189.76	84.39
J-208	2.35	860	1,042.91	79.26
J210	9.63	965	1,189.76	97.39

ID	Demand (gpm)	Elevation (ft)	Head (ft)	Pressure (psi)
J-210	2.35	820	1,042.77	96.52
J212	9.63	1,025.00	1,188.12	70.68
J-212	2.35	840	1,042.77	87.86
J214	9.63	1,025.00	1,188.08	70.66
J-214	2.35	780	1,041.54	113.33
J216	9.63	1,035.00	1,187.69	66.16
J-216	0	766	1,041.01	119.16
J218	9.63	1,055.00	1,187.73	57.51
J-218	2.35	800	1,043.55	105.53
J22	0	750	975.42	97.67
J-22	3.99	510	705.15	84.56
J220	9.63	1,030.00	1,187.40	68.2
J-220	2.35	870	1,046.51	76.48
J222	9.63	1,030.00	1,187.44	68.22
J-222	2.35	900	1,049.12	64.61
J224	9.63	1,035.00	1,187.44	66.05
J-224	2.35	930	1,051.30	52.56
J226	9.63	1,025.00	1,187.45	70.39
J-226	2.35	940	1,052.02	48.54
J228	9.63	1,025.00	1,187.45	70.39
J-228	2.35	970	1,052.02	35.54
J230	9.63	1,035.00	1,187.48	66.07
J-230	0	938.66	1,054.04	49.99
J232	9.63	1,035.00	1,187.44	66.05
J-232	2.35	590	870.06	121.35
J234	9.63	1,035.00	1,187.37	66.02
J-234	2.35	690	870.06	78.02
J236	9.63	1,045.00	1,187.61	61.79
J-236	2.35	670	870.06	86.68
J238	9.63	1,045.00	1,187.73	61.84
J-238	2.35	750	870.06	52.02
J24	0	750	975.42	97.67
J-24	3.99	500	705.57	89.07
J240	9.63	1,045.00	1,187.73	61.84
J-240	3.99	500	705.69	89.12
J242	9.63	1,044.00	1,187.73	62.28
J-242	2.35	810	1,042.86	100.9
J244	9.63	1,045.00	1,187.58	61.78
J-244	2.35	815.49	1,042.99	98.57
J246	9.63	1,055.00	1,188.33	57.77
J-246	2.35	840	1,043.14	88.02
J248	9.63	1,055.00	1,188.45	57.82
J-248	2.35	947.54	1,043.23	41.46
J250	9.63	1,055.00	1,189.19	58.14

ID	Demand (gpm)	Elevation (ft)	Head (ft)	Pressure (psi)
J-250	2.35	947.54	1,188.53	104.42
J252	9.63	1,055.00	1,189.92	58.46
J-252	2.35	950	1,188.53	103.36
J254	9.63	1,050.00	1,190.76	60.99
J-254	2.35	970	1,188.53	94.69
J256	9.63	1,050.00	1,190.57	60.91
J-256	2.35	1,041.82	1,188.53	63.57
J258	9.63	1,055.00	1,190.24	58.6
J-26	3.99	500	706.49	89.47
J260	9.63	1,055.00	1,190.23	58.6
J262	9.63	1,055.00	1,190.19	58.58
J-262	3.99	500	705.6	89.08
J264	9.63	1,045.00	1,190.10	62.87
J-264	3.99	500	704.92	88.79
J266	9.63	1,045.00	1,190.08	62.86
J-266	3.99	500	704.06	88.42
J268	9.63	1,045.00	1,190.08	62.86
J-268	2.92	500	703.87	88.34
J270	9.63	1,055.00	1,189.74	58.38
J-270	2.92	490	703.64	92.57
J272	9.63	1,070.00	1,189.44	51.75
J-272	2.92	492	703.64	91.7
J274	9.63	1,085.00	1,190.07	45.53
J-274	2.92	490	703.63	92.57
J276	9.63	1,055.00	1,190.11	58.54
J-276	2.92	490	703.64	92.57
J278	9.63	1,055.00	1,190.09	58.53
J-278	2.92	485	703.23	94.56
J28	0	890	1,094.01	88.4
J-28	3.99	500	707.16	89.76
J280	9.63	1,070.00	1,190.05	52.02
J-280	2.92	490	703.17	92.37
J282	0	1,055.00	1,190.20	58.58
J-282	2.92	490	703.14	92.36
J284	9.63	1,060.00	1,190.35	56.48
J-284	2.92	490	703.11	92.34
J286	9.63	1,050.00	1,190.74	60.98
J-286	2.92	490	703.16	92.36
J288	9.63	1,045.00	1,191.00	63.26
J-288	2.92	487	703.21	93.68
J290	9.63	1,100.00	1,190.97	39.42
J-290	2.92	485	703.23	94.56
J292	9.63	1,100.00	1,190.96	39.41
J-292	2.92	490	703.23	92.39

ID	Demand (gpm)	Elevation (ft)	Head (ft)	Pressure (psi)
J294	9.63	1,030.00	1,188.35	68.61
J-294	2.92	495	703.23	90.23
J296	9.63	1,030.00	1,188.33	68.61
J-296	2.92	490	703.16	92.36
J298	9.63	1,035.00	1,188.47	66.5
J-298	2.92	480	703.16	96.7
J-30	3.99	500	707.4	89.87
J300	9.63	1,035.00	1,188.11	66.34
J-300	2.92	480	703.16	96.7
J302	9.63	1,040.00	1,187.95	64.11
J-302	2.92	480	703.16	96.7
J304	9.63	1,050.00	1,187.84	59.73
J-304	2.92	490	703.16	92.36
J306	9.63	1,045.00	1,190.80	63.18
J-306	2.92	490	703.16	92.36
J308	9.63	1,045.00	1,190.88	63.21
J-308	2.92	490	703.09	92.33
J310	9.63	1,055.00	1,192.22	59.46
J-310	2.92	490	702.7	92.16
J312	9.63	1,055.00	1,191.97	59.35
J-312	2.92	480	702.69	96.49
J314	9.63	1,055.00	1,191.52	59.15
J-314	2.92	480	702.69	96.49
J316	9.63	1,055.00	1,194.25	60.34
J-316	2.92	480	702.69	96.49
J318	9.63	1,040.00	1,190.88	65.38
J-318	2.92	480	702.69	96.49
J32	0	890	1,094.01	88.4
J-32	3.99	500	707.75	90.02
J320	9.63	1,025.00	1,188.35	70.78
J-320	2.92	480	702.69	96.49
J322	9.63	1,045.00	1,191.24	63.37
J-322	2.92	480	702.69	96.49
J324	9.63	1,080.00	1,189.33	47.37
J-324	2.92	490	702.67	92.15
J326	9.63	1,100.00	1,188.17	38.2
J-326	2.92	490	702.66	92.14
J328	0	1,045.00	1,191.50	63.48
J-328	2.92	490	702.61	92.13
J330	0	1,045.00	1,191.51	63.48
J-330	2.92	490	702.65	92.14
J332	0	1,055.00	1,190.24	58.6
J-332	2.92	490	702.61	92.13
J334	0	578	700.66	53.15

ID	Demand (gpm)	Elevation (ft)	Head (ft)	Pressure (psi)
J-334	2.88	490	702.44	92.05
J336	0	577	700.66	53.58
J-336	2.88	490	702.44	92.05
J338	0	581	700.66	51.85
J-338	3.99	500	702.78	87.86
J34	0	890	1,094.01	88.4
J-34	3.99	500	707.8	90.04
J340	0	588	700.66	48.82
J-340	3.99	500	702.92	87.93
J342	0	604	795.71	83.07
J-342	3.99	500	702.95	87.94
J344	0	596	795.71	86.54
J-344	3.99	500	703.08	87.99
J346	0	581	700.66	51.85
J-346	2.92	500	703.08	88
J348	0	587	700.66	49.25
J-348	2.92	500	703.09	88
J350	0	611	795.71	80.04
J-350	2.92	490	703.11	92.34
J352	0	610	698.36	38.28
J-352	2.92	500	703.15	88.02
J354	0	700	881.08	78.46
J-354	3.99	500	703.31	88.09
J356	0	705	881.08	76.29
J-356	3.99	500	704.14	88.45
J358	0	670	881.08	91.46
J-358	3.99	500	704.21	88.48
J36	0	890	1,005.39	50
J-36	3.99	500	708.02	90.14
J360	0	690	881.08	82.79
J-360	3.99	500	704.14	88.46
J362	0	662	881.08	94.93
J-362	3.99	500	704.57	88.64
J364	0	698	881.08	79.33
J-364	3.99	500	704.84	88.76
J366	0	600	698.7	42.77
J-366	3.99	500	704.97	88.81
J368	0	612	698.1	37.31
J-368	3.99	500	704.73	88.71
J370	0	612	698.11	37.31
J-370	3.99	500	704.48	88.6
J372	0	500	703.05	87.98
J-372	3.99	508	704.05	84.95
J374	0	500	703.27	88.08

ID	Demand (gpm)	Elevation (ft)	Head (ft)	Pressure (psi)
J-374	3.99	500	704.09	88.43
J376	0	500	703.14	88.02
J-376	3.99	500	704.09	88.43
J378	0	483	702.61	95.16
J-378	3.99	515	703.45	81.65
J38	0	890	1,005.39	50
J-38	3.99	490	708.8	94.81
J380	0	480	702.61	96.46
J-380	3.99	510	702.87	83.57
J382	0	479	702.61	96.89
J-382	3.99	520	702.87	79.24
J384	0	477	702.69	97.79
J-384	3.99	510	702.53	83.42
J386	0	475	702.69	98.66
J-386	3.99	510	702.44	83.39
J388	0	474	702.69	99.09
J-388	3.99	510	702.59	83.45
J390	0	473	702.69	99.52
J-390	3.99	510	702.6	83.45
J392	0	487	702.61	93.43
J-392	1.65	520	701.99	78.86
J394	0	485	702.61	94.29
J-394	1.65	520	701.95	78.84
J396	0	481	702.61	96.03
J-396	1.65	520	701.38	78.59
J398	0	485	702.69	94.33
J-398	1.65	530	701.17	74.17
J40	0	845	1,005.39	69.5
J-40	3.99	490	709.85	95.26
J400	0	512	702.59	82.58
J-400	1.65	530	701.07	74.12
J402	0	515	702.57	81.27
J-402	1.65	530	701.04	74.11
J404	0	512	702.7	82.63
J-404	1.65	530	701	74.09
J406	0	490	703.11	92.34
J-406	1.65	530	700.89	74.05
J408	0	490	703.1	92.34
J-408	1.65	530	700.92	74.06
J410	0	490	703.1	92.34
J-410	1.65	538	701.18	70.71
J412	0	490	703.1	92.34
J-412	1.65	540	700.7	69.63
J414	0	490	703.1	92.33

ID	Demand (gpm)	Elevation (ft)	Head (ft)	Pressure (psi)
J-414	1.65	540	700.81	69.68
J416	0	490	703.07	92.32
J-416	1.65	570	700.69	56.63
J418	0	490	703	92.29
J-418	1.65	590	700.55	47.9
J42	0	840	1,005.39	71.67
J-42	2.35	510	711.39	87.26
J420	0	490	703.11	92.34
J-420	1.65	590	700.65	47.94
J422	0	486.52	703.23	93.9
J-422	1.65	600	700.24	43.44
J424	0	484	703.23	94.99
J-424	1.65	560	700.28	60.78
J-426	1.65	570	700.02	56.34
J-428	1.65	570	699.73	56.21
J430	0	484	703.23	94.99
J-430	1.65	580	699.49	51.78
J432	0	484	703.23	94.99
J-432	1.65	590	699.25	47.34
J434	0	484	703.23	94.99
J-434	1.65	590	699.11	47.28
J436	0	483	703.23	95.43
J438	0	482	703.23	95.86
J-438	1.65	600	699.58	43.15
J44	0	820	1,005.39	80.33
J-44	2.35	510	711.1	87.14
J440	0	481	703.23	96.29
J-440	1.65	600	699.96	43.31
J442	0	482	703.23	95.86
J-442	0	603	699.96	42.01
J444	0	486.67	703.23	93.84
J-444	0	603	795.75	83.52
J446	0	480	703.23	96.73
J-446	1.65	610	795.74	80.48
J448	0	480	703.23	96.73
J-448	1.65	620	795.75	76.15
J450	0	486.54	703.23	93.89
J-450	1.65	630	795.75	71.82
J452	0	489.51	703.23	92.61
J-452	2.59	630	795.74	71.81
J454	0	484	703.23	94.99
J-454	2.59	630	795.72	71.81
J456	0	482.15	703.23	95.79
J-456	2.59	650	795.72	63.14

ID	Demand (gpm)	Elevation (ft)	Head (ft)	Pressure (psi)
J458	0	481.08	703.23	96.26
J-458	2.59	650	795.71	63.14
J46	0	810	1,005.39	84.66
J-46	2.35	530	710.99	78.42
J460	0	481.05	703.23	96.27
J-460	2.59	650	795.71	63.14
J462	0	480	703.23	96.73
J-462	2.59	640	795.71	67.47
J464	0	483.76	703.23	95.1
J-464	2.59	610	795.71	80.47
J466	0	484.95	703.23	94.58
J-466	2.59	620	795.71	76.14
J468	0	484.28	703.23	94.87
J-468	1.65	546	700.91	67.12
J470	0	486.52	703.23	93.9
J-470	1.65	530	700.8	74.01
J472	0	485	703.23	94.56
J-472	1.65	540	700.78	69.66
J474	0	485	703.23	94.56
J-474	1.65	551	700.78	64.9
J476	0	725	975.42	108.51
J-476	1.65	530	700.73	73.98
J478	0	555	700.69	63.13
J-478	1.65	557	700.71	62.27
J48	0	810	1,005.39	84.66
J-48	2.35	530	711.55	78.66
J-480	1.65	565	700.71	58.8
J-482	2.88	530	700.73	73.98
J-484	2.88	540	700.85	69.7
J-486	2.88	540	700.66	69.61
J-488	2.88	540	700.66	69.61
J490	0	550.21	700.71	65.21
J-490	2.88	560	700.61	60.93
J492	0	610	795.71	80.47
J-492	2.88	560	700.61	60.93
J-494	2.88	600	700.53	43.56
J496	0	559.79	700.68	61.04
J-496	2.88	600	700.5	43.55
J498	0	557.23	700.69	62.16
J-498	2.92	490	703.08	92.33
J50	0	780	1,005.39	97.66
J-50	2.35	540	711.99	74.52
J500	0	558.96	700.69	61.41
J-500	3.99	510	704.34	84.21

ID	Demand (gpm)	Elevation (ft)	Head (ft)	Pressure (psi)
J502	0	558.92	700.69	61.43
J-502	3.99	520	704.25	79.83
J504	0	559.52	700.68	61.17
J-504	3.99	520	703.91	79.69
J506	0	559.46	700.68	61.19
J-506	3.99	520	704.16	79.8
J508	0	611	795.71	80.04
J-508	3.99	520	703.92	79.69
J510	0	611	795.71	80.04
J-510	3.99	520	703.68	79.59
J512	0	555.57	700.69	62.88
J-512	3.99	520	703.51	79.51
J514	0	555.35	700.69	62.98
J-514	3.99	530	703.25	75.07
J516	0	558.68	700.69	61.53
J-516	2.88	491	701.93	91.39
J518	0	558.93	700.69	61.43
J-518	2.88	500	701.93	87.49
J52	0	760	1,005.39	106.33
J-52	2.35	510	712.05	87.55
J520	0	558.93	700.69	61.43
J-520	2.88	500	701.92	87.49
J522	0	559	700.68	61.39
J-522	2.88	460	701.92	104.82
J524	0	559.51	700.68	61.17
J-524	2.88	510	701.62	83.03
J526	0	559.49	700.68	61.18
J-526	2.88	500	701.62	87.36
J528	0	559.72	700.68	61.08
J-528	2.88	500	701.53	87.32
J530	0	610.43	795.71	80.28
J-530	2.88	500	701.48	87.3
J-532	2.88	530	701.22	74.19
J534	0	1,043.11	1,189.24	63.32
J-534	2.88	530	701.08	74.13
J-536	2.88	530	701.06	74.12
J-538	2.88	510	701.05	82.78
J54	0	760	1,005.39	106.33
J-54	2.35	520	712.05	83.21
J540	0	588	700.66	48.82
J-540	2.88	510	701.04	82.78
J542	0	577.18	700.66	53.5
J-542	2.88	530	701.03	74.11
J544	0	600	795.71	84.8

ID	Demand (gpm)	Elevation (ft)	Head (ft)	Pressure (psi)
J-544	2.88	520	701.03	78.44
J546	0	629	796.68	72.66
J-546	2.88	520	701.03	78.44
J-548	2.88	540	700.97	69.75
J550	0	635.99	795.75	69.23
J-550	2.88	530	700.97	74.08
J552	0	620	796.51	76.48
J-552	2.88	540	700.92	69.73
J554	0	590	700.59	47.92
J-554	2.88	560	700.92	61.06
J556	0	479	703.23	97.16
J-556	2.88	560	700.92	61.06
J558	0	479	703.23	97.16
J-558	0	766	872.15	45.99
J56	0	760	897.84	59.73
J-56	2.35	570	712.05	61.55
J560	0	479	703.23	97.16
J-560	0	584.18	869.68	123.71
J562	0	479	703.23	97.16
J-562	0	570	714.23	62.49
J564	0	700	791.8	39.78
J-564	0	615	700.5	37.05
J566	0	715	975.42	112.84
J-566	0	615	837.99	96.62
J568	0	547.99	700.72	66.18
J-568	2.67	700	837.99	59.79
J570	0	542	700.71	68.77
J-570	2.67	710	837.99	55.46
J572	0	535	700.74	71.82
J-572	2.67	720	838	51.13
J574	0	547	700.72	66.61
J-574	2.67	730	838	46.8
J576	0	534.76	700.78	71.93
J-576	2.67	770	838.02	29.47
J578	0	556.35	700.74	62.56
J-578	2.67	760	838.01	33.8
J58	0	760	1,005.39	106.33
J-58	2.35	610	894.72	123.37
J580	0	563	700.71	59.67
J-580	2.67	732	838	45.93
J582	0	560	700.73	60.98
J-582	2.67	760	838.01	33.8
J584	0	567	700.72	57.94
J-586	2.67	800	838.05	16.49

ID	Demand (gpm)	Elevation (ft)	Head (ft)	Pressure (psi)
J-588	0	800	1,007.20	89.78
J-590	2.67	800	1,007.19	89.77
J-592	2.67	770	1,007.18	102.77
J-594	2.67	770	1,007.14	102.75
J-596	2.67	800	1,007.18	89.77
J-598	2.67	780	1,007.17	98.43
J60	0	760	897.84	59.73
J-60	2.35	620	894.9	119.11
J-600	2.67	765	1,007.14	104.92
J-602	0	765	1,007.15	104.92
J-604	0	765	1,007.17	104.93
J-606	2.67	780	1,007.17	98.43
J-608	2.67	760	1,007.14	107.09
J-610	2.67	778	1,007.18	99.3
J-612	2.67	770	1,007.14	102.75
J-614	2.67	770	1,007.14	102.75
J-616	2.67	800	1,007.18	89.77
J-618	2.67	750	837.96	38.11
J62	0	700	897.84	85.72
J-62	1.81	680	895.73	93.48
J-620	2.67	740	837.96	42.45
J-622	2.67	700	837.96	59.78
J-624	2.67	700	837.97	59.78
J-626	2.88	630	837.96	90.11
J-628	0	600	837.96	103.11
J-630	0	600	700.43	43.51
J-632	2.88	580	700.42	52.18
J-634	2.88	580	700.43	52.18
J-636	2.88	570	700.43	56.51
J-638	2.88	600	700.42	43.51
J64	0	656	897.84	104.79
J-64	1.81	730	896.51	72.15
J-640	2.88	570	700.42	56.51
J-642	2.88	590	700.42	47.85
J-644	2.88	570	700.42	56.51
J-646	2.88	560	700.42	60.85
J-648	2.88	570	700.43	56.51
J-650	2.88	570	700.44	56.52
J-652	2.88	580	700.44	52.19
J-654	2.88	590	700.44	47.85
J-656	2.88	580	700.46	52.2
J-658	2.88	590	700.46	47.86
J66	0	640	897.84	111.72
J-66	1.81	700	896.51	85.15

ID	Demand (gpm)	Elevation (ft)	Head (ft)	Pressure (psi)
J-660	0	745	1,007.14	113.58
J-662	0	745	837.96	40.28
J-664	2.67	780	1,007.18	98.44
J-666	2.67	810	1,007.18	85.44
J-668	2.67	840	1,007.18	72.44
J-670	2.67	840	1,007.19	72.44
J-672	2.67	820	1,007.19	81.11
J-674	2.67	830	1,007.19	76.78
J-676	2.67	840	1,007.21	72.45
J-678	2.67	850	1,007.21	68.12
J68	0	660	897.84	103.06
J-68	1.81	730	896.69	72.23
J-680	2.67	825	1,007.23	78.96
J-682	2.67	870	1,007.23	59.46
J-684	2.67	890	1,007.25	50.8
J-686	2.67	915	1,007.28	39.99
J-688	0	917	1,007.31	39.13
J-690	2.67	917	1,007.30	39.13
J-692	2.67	915	1,007.25	39.97
J-694	2.67	910	1,007.23	42.13
J-696	2.67	910	1,007.22	42.13
J-698	2.67	900	1,007.21	46.46
J70	0	660	897.84	103.06
J-70	1.81	730	897.4	72.53
J-700	2.67	870	1,007.20	59.45
J-702	2.59	660	795.71	58.8
J-704	2.59	660	795.71	58.8
J-706	2.59	660	795.71	58.8
J-708	2.59	664	795.71	57.07
J-710	2.59	680	795.71	50.14
J-712	2.59	687	795.71	47.11
J-714	2.59	700	795.71	41.47
J-716	2.59	690	795.72	45.81
J-718	2.59	682	795.73	49.28
J72	0	680	897.84	94.39
J-72	1.81	710	897.64	81.31
J-720	2.59	680	795.73	50.14
J-722	2.59	670	795.73	54.48
J-724	1.65	680	795.74	50.15
J-726	1.65	660	795.76	58.82
J-728	0	690	795.74	45.82
J-730	0	690	881.08	82.79
J-732	1.65	710	881.08	74.13
J-734	1.65	710	881.08	74.13

ID	Demand (gpm)	Elevation (ft)	Head (ft)	Pressure (psi)
J-736	1.65	710	881.08	74.13
J-738	1.65	710	881.08	74.13
J74	0	720	897.84	77.06
J-74	1.81	680	897.64	94.3
J-740	1.65	710	881.08	74.13
J-742	1.65	710	881.08	74.13
J-744	0	698.7	881.08	79.02
J-746	0	698.7	792.09	40.47
J-748	2.59	730	975.42	106.34
J-750	1.65	650	795.77	63.16
J-752	1.65	630	795.76	71.82
J-754	1.65	630	795.76	71.82
J-756	1.65	630	795.76	71.82
J-758	1.65	640	795.76	67.49
J76	0	735	897.84	70.56
J-76	1.81	580	897.64	137.63
J-760	1.65	640	795.83	67.52
J-762	1.65	630	795.88	71.87
J-764	1.65	630	795.92	71.89
J-766	2.59	650	795.74	63.15
J-768	1.65	630	795.72	71.8
J-770	1.65	640	795.36	67.32
J-772	1.65	640	795.04	67.18
J-774	1.65	650	794.72	62.71
J-776	1.65	650	794.38	62.56
J-778	1.65	660	794.07	58.09
J78	0	710	897.84	81.39
J-78	1.81	846	1,082.09	102.3
J-780	1.65	660	793.74	57.95
J-782	1.65	660	793.43	57.82
J-784	1.65	660	793.27	57.74
J-786	1.65	670	792.77	53.2
J-788	1.65	680	792.46	48.73
J-790	1.65	680	792.46	48.73
J-792	1.65	680	792.33	48.67
J-794	2.59	680	792.11	48.58
J-796	2.59	680	792.1	48.57
J-798	2.59	680	792.09	48.57
J80	0	735	881.08	63.3
J-80	1.81	927	1,082.56	67.4
J-800	2.59	680	792.08	48.56
J-802	2.59	680	792.08	48.56
J-804	2.59	643	791.93	64.53
J-806	2.59	620	791.87	74.47

ID	Demand (gpm)	Elevation (ft)	Head (ft)	Pressure (psi)
J-808	2.59	627	791.86	71.43
J-810	2.59	610	791.85	78.8
J-812	2.59	610	791.85	78.8
J-814	2.59	610	791.84	78.79
J-816	2.59	600	791.83	83.12
J-818	2.59	590	791.83	87.45
J82	0	739	881.08	61.56
J-82	1.81	980	1,083.14	44.69
J-820	2.59	590	791.82	87.45
J-822	2.59	590	791.82	87.45
J-824	2.59	618	791.82	75.31
J-826	2.59	625	791.82	72.28
J-828	2.59	660	791.82	57.12
J-830	2.59	620	791.82	74.45
J-832	2.59	620	791.82	74.45
J-834	2.59	600	791.82	83.11
J-836	2.59	700	791.82	39.78
J-838	2.59	700	791.82	39.78
J84	0	740	881.08	61.13
J-84	1.81	1,010.00	1,198.27	81.58
J-840	2.59	680	791.82	48.45
J-842	2.59	640	791.82	65.79
J-844	2.59	635	791.83	67.95
J-846	2.59	640	791.83	65.79
J-848	2.59	623	791.83	73.15
J-850	2.59	630	791.83	70.12
J-852	2.59	640	791.83	65.79
J-854	2.59	620	791.84	74.46
J-856	2.59	610	791.84	78.79
J-858	1.65	670	792.77	53.2
J86	0	735	881.08	63.3
J-86	1.81	1,010.00	1,198.93	81.86
J-860	2.59	738.1	881.08	61.95
J-862	2.59	705	881.08	76.29
J-864	2.59	760	881.08	52.46
J-866	2.59	759.4	881.08	52.72
J-868	2.59	650	881.08	100.13
J-870	2.59	780	881.08	43.8
J-872	2.59	790	881.08	39.46
J-874	2.59	800	881.08	35.13
J-876	2.59	800	881.08	35.13
J-878	2.59	800	881.08	35.13
J88	0	741	881.08	60.7
J-88	1.81	1,010.00	1,199.43	82.08

ID	Demand (gpm)	Elevation (ft)	Head (ft)	Pressure (psi)
J-880	2.59	778.6	881.08	44.41
J-882	2.59	780	881.08	43.8
J-886	2.59	700	791.59	39.69
J-888	2.59	700	791.72	39.74
J-890	2.59	680	791.72	48.41
J-892	2.59	700	791.76	39.76
J-894	2.59	680	792.09	48.57
J-896	2.59	690	792.09	44.23
J-898	2.59	709	792.09	36
J90	0	749	881.08	57.23
J-90	1.81	1,000.00	1,199.89	86.61
J-900	0	747.49	876.93	56.09
J-902	2.59	770	975.42	89.01
J-904	2.59	760	975.42	93.34
J-906	2.59	770	975.42	89.01
J-908	2.59	770	975.42	89.01
J-910	2.59	790	975.42	80.34
J-912	2.59	790	975.42	80.34
J-918	2.59	830	975.42	63.01
J92	0	754	881.08	55.06
J-92	1.81	998	1,199.97	87.51
J-920	2.59	810	975.42	71.68
J-922	0	615	837.99	96.62
J-924	0	615	700.5	37.05
J-926	1.65	620	796.68	76.56
J-928	1.65	610	796.68	80.89
J-930	1.65	600	796.68	85.22
J-932	1.65	620	796.68	76.56
J-934	1.65	620	796.68	76.56
J-936	1.65	620	796.68	76.56
J-938	1.65	600	698.7	42.77
J94	0	755	881.08	54.63
J-94	1.81	940	1,099.55	69.13
J-940	1.65	610	698.34	38.28
J-942	0	615	697.94	35.94
J-944	0	615	796.68	78.72
J-946	0	615	796.68	78.72
J-948	0	615	697.94	35.94
J-950	0	938.66	1,196.17	111.58
J-952	0	951	1,196.72	106.47
J-954	0	974	1,211.35	102.84
J-956	0	998	1,199.97	87.51
J-958	0	998	1,099.55	44
J96	0	753	881.08	55.5

ID	Demand (gpm)	Elevation (ft)	Head (ft)	Pressure (psi)
J-96	1.81	880	1,099.55	95.13
J-960	0	988	1,198.03	91.01
J-962	0	988	1,083.48	41.37
J-964	0	787	1,081.67	127.68
J-966	0	787	898.71	48.4
J-970	0	787	901.9	49.79
J-972	0	787	1,078.48	126.3
J-974	0	988	1,194.78	89.6
J-976	0	988	1,086.74	42.78
J-978	0	765	1,007.15	104.92
J98	0	754	881.08	55.06
J-98	1.81	970	1,200.16	99.73
J-980	0	765	1,007.17	104.93
J-982	0	747.49	880	57.42
J-984	0	576.58	712.38	58.84
J-986	0	576.58	712.38	58.84
J-988	0	576.58	894.36	137.69
J-990	0	576.58	715.33	60.12
J-992	0	576.58	891.41	136.41
J-994	0	576.58	894.36	137.69
J-998	2.92	485	703.23	94.56

ATTACHMENT A

2040 Fire Flow without Capital Improvement Plan

ID	Total Demand (gpm)	Available Flow at Hydrant (gpm); maintains 20 psi in water main adjacent to hydrant	Critical Node ID	Critical Node Pressure (psi) at Available Fire Flow	Critical Node Head (ft)	Design Flow (gpm); Max Flow at hydrant to Maintain Minimum System Pressure at 20	Design Pressure (psi)	Design Fire Node Pressure (psi)	Critical Pipe ID	Critical Pipe Velocity (ft/s)
J-204	1,000.00	383.54	J-204	20	997.16	383.54	20	39.97	EKS_RD_P	10.02
J-980	1,000.00	385.18	J-692	11.03	940.44	384.22	20	85.77	P-1053	10
J-376	1,002.25	391.68	J-376	20	546.16	391.68	20	73.88	P-283	10
J-662	1,000.00	573.37	J-618	18.46	792.6	574.21	20	27.97	V-90092	10.09
J-692	1,001.51	611.94	J-692	20	961.16	611.9	20	20	P-721	4.82
J-696	1,001.51	648.12	J-696	20	956.16	654.1	20	19.87	P-717	4.44
J-582	1,001.51	662.28	J-582	20	806.16	659.16	20	19.99	P-651	4.21
J-836	1,001.46	666.44	J-836	20	746.16	666.46	20	20	P-877	2.67
J-694	1,001.51	661.31	J-694	20	956.16	667.06	20	19.87	P-719	4.7
J-838	1,001.46	668.31	J-838	20	746.16	668.33	20	20	P-875	2.71
J-832	1,001.46	1,346.98	J-836	-10.41	675.98	685.49	20	53.44	P-879	2.53
J-834	1,001.46	1,427.28	J-836	-15.09	665.18	685.49	20	61.2	P-881	4.38
J-830	1,001.46	1,338.61	J-836	-9	679.23	693.46	20	52.98	P-883	2.45
J-840	1,001.46	906.72	J-838	11.86	727.37	694.72	20	28.35	P-873	3
J-698	1,001.51	799.81	J-696	17.56	950.53	695.78	20	22.74	P-715	4.35
J-828	1,001.46	1,028.10	J-836	7.15	716.49	704.03	20	35.11	P-885	2.36
J-630	1,000.00	705.74	J-630	20	646.16	705.65	20	34.97	V-90072	10.09
J-826	1,001.46	1,294.92	J-836	-4.38	689.89	715.15	20	49.79	P-857	2.3
J-842	1,001.46	1,305.43	J-838	-4.49	689.65	719.57	20	45.51	P-869	3.28
J-824	1,001.46	1,346.69	J-836	-5.75	686.74	727.61	20	52.4	P-855	2.49
J-844	1,001.46	1,371.56	J-838	-6.4	685.24	733.76	20	47.62	P-871	3.47
J-846	1,001.46	881.28	J-838	6.53	715.06	733.76	20	39.99	P-867	8.33
J-848	1,001.46	1,497.35	J-838	-11.28	673.96	748.49	20	52.81	P-865	3.65
J-822	1,001.46	1,554.79	J-836	-13.97	667.76	751.24	20	64.11	P-853	2.87
J-642	1,001.62	819.04	J-642	20	636.16	758.73	20	19.99	P-625	8.61
J-638	1,001.62	761.51	J-638	20	646.16	761.49	20	20	P-629	8.64
J-850	1,001.46	1,470.98	J-838	-8.42	680.57	762.59	20	49.79	P-861	3.84
J-852	1,001.46	881.28	J-838	7.01	716.17	762.59	20	39.68	P-863	8.65
J-820	1,001.46	1,581.03	J-836	-13.87	667.98	763.76	20	64.09	P-851	3.08
J-818	1,001.46	1,607.99	J-836	-14.1	667.45	773.83	20	64.17	P-849	3.26
J-700	1,001.51	1,182.84	J-696	10.88	935.11	780.6	20	33.4	P-695	4.69

ID	Total Demand (gpm)	Available Flow at Hydrant (gpm); maintains 20 psi in water main adjacent to hydrant	Critical Node ID	Critical Node Pressure (psi) at Available Fire Flow	Critical Node Head (ft)	Design Flow (gpm); Max Flow at hydrant to Maintain Minimum System Pressure at 20	Design Pressure (psi)	Design Fire Node Pressure (psi)	Critical Pipe ID	Critical Pipe Velocity (ft/s)
J-816	1,001.46	1,576.14	J-836	-11.28	673.97	784.58	20	60.03	P-847	3.46
J-854	1,001.46	1,627.55	J-838	-12.92	670.19	793.56	20	54.23	P-837	4.27
J-856	1,001.46	881.28	J-838	1.64	703.79	793.56	20	50.86	P-859	9
J-814	1,001.46	1,617.40	J-836	-10.38	676.04	812.27	20	56.62	P-845	4.01
J-810	1,001.46	1,717.13	J-836	-13.19	669.55	839.02	20	57.25	P-841	4.5
J-812	1,001.46	1,566.72	J-836	-9.51	678.05	839.02	20	56.04	P-843	5.36
J-808	1,001.46	1,668.24	J-836	-9.37	678.37	854	20	50.8	P-839	4.96
J-806	1,001.46	1,530.31	J-836	-14.67	666.14	865.75	20	54.49	P-835	5.76
J-606	1,001.51	873.77	J-692	9.28	936.41	873.74	20	66.77	P-669	10
J-600	1,001.51	875.26	J-692	13.49	946.14	875.25	20	59.52	P-659	10
J-272	1,001.65	877.99	J-272	20	538.16	877.99	20	68.9	P-317	10
J-518	1,001.62	878.04	J-520	20	546.16	878.05	20	69.61	P-545	10
J-608	1,001.51	878.27	J-692	16.38	952.81	878.26	20	52.48	P-661	10
J-614	1,001.51	879.77	J-692	19.25	959.42	879.77	20	35.27	P-663	10
J-336	1,001.62	881.28	J-336	20	536.16	881.28	20	67.72	P-413	10
J-522	1,001.62	946.19	J-522	20	506.16	881.28	20	29.81	P-549	10
J-56	1,001.32	1,466.88	J-1000	11.33	616.16	881.28	20	43.18	P-137	10
J-594	1,001.51	881.28	J-692	17.09	954.44	881.28	20	47.43	P-657	10
J-612	1,001.51	881.28	J-692	19.57	960.16	881.28	20	32.62	P-665	10
J-626	1,001.62	881.28	J-626	20	676.16	881.28	20	39.39	P-635	10
J-628	1,000.00	881.28	J-628	20	646.16	881.28	20	42.36	P-633	10
J-660	1,000.00	881.28	J-692	18.48	957.65	881.28	20	44.37	P-685	10
J-922	1,000.00	881.28	J-582	13.83	791.91	881.28	20	64.46	P-987	10
J-936	1,000.93	881.28	J-936	20	666.16	881.28	20	64.26	P-1017	10
J-998	1,001.65	881.28	J-998	20	531.16	881.28	20	83.03	P739	10
J-578	1,001.51	884.06	J-582	20	806.16	884.6	20	19.99	P-649	5.05
J-670	1,001.51	1,582.02	J-692	9.48	936.89	894.39	20	44.68	P-697	4.15
J-690	1,001.51	908.27	J-690	20	963.16	910.74	20	19.98	P-723	9.1
J-668	1,001.51	1,357.45	J-692	14.15	947.67	923.5	20	39.29	P-693	6.63
J-728	1,000.00	935.5	J-728	20	736.16	935.49	20	39.31	V-90132	10.01
J-580	1,001.51	1,577.11	J-582	11.93	787.54	940.78	20	30.37	P-647	5.03

ID	Total Demand (gpm)	Available Flow at Hydrant (gpm); maintains 20 psi in water main adjacent to hydrant	Critical Node ID	Critical Node Pressure (psi) at Available Fire Flow	Critical Node Head (ft)	Design Flow (gpm); Max Flow at hydrant to Maintain Minimum System Pressure at 20	Design Pressure (psi)	Design Fire Node Pressure (psi)	Critical Pipe ID	Critical Pipe Velocity (ft/s)
J-666	1,001.51	1,520.06	J-692	12.18	943.12	947.24	20	49.63	P-689	5.5
J-664	1,001.51	1,337.82	J-692	7.26	931.75	964.82	20	64.41	P-687	7.21
J-672	1,001.51	1,856.20	J-692	6.97	931.08	965.78	20	52.6	P-701	5.03
J-616	1,001.51	1,563.62	J-692	7.04	931.25	965.97	20	58.59	P-699	6.19
J-610	1,001.51	2,047.58	J-692	3.67	923.47	974.42	20	68.25	P-673	4.41
J-572	1,001.51	1,703.12	J-582	10.75	784.82	983.04	20	34.03	P-645	5.04
J-574	1,001.51	1,334.55	J-582	16.01	796.94	983.04	20	27.62	P-643	6.27
J-1062	1,000.00	1,416.77	J-836	9.61	722.18	994.91	20	37.87	P-1165	6.35
J-686	1,001.51	994.97	J-686	20	961.16	995.19	20	20	P-727	5.73
J-602	1,000.00	1,253.44	J-692	12.76	944.46	996.21	20	60.01	V-90412	7.96
J-804	1,001.46	1,528.88	J-836	-4.71	689.12	996.37	20	44.69	P-833	6.6
J-598	1,001.51	1,662.45	J-692	6.64	930.33	997.71	20	65.07	P-671	6.02
J-942	1,000.00	151,378.17	J-690	24.96	974.6	1,000.00	20	24.99	P553	3.52
J-674	1,001.51	1,552.19	J-692	9.66	937.3	1,001.01	20	47.47	P-703	6.47
J-72	1,001.02	5,552.99	J-690	24.96	974.6	1,001.02	20	68.28	P111	4.04
J-1000	1,000.00	881.28	J-1000	20	636.16	1,009.39	20	20.08		
J-714	1,001.46	1,022.60	J-714	20	746.16	1,020.49	20	20.05	P-759	6.51
J-570	1,001.51	1,746.79	J-582	11.08	785.56	1,020.97	20	36.52	P-641	4.99
J-596	1,001.51	1,386.06	J-692	8.69	935.05	1,025.27	20	57.04	P-707	7.41
J-684	1,001.51	1,459.34	J-686	14.87	949.31	1,025.48	20	27.83	P-729	5.46
J-590	1,001.51	1,338.61	J-692	8.32	934.2	1,027.81	20	57.44	P-709	7.7
J-680	1,001.51	1,955.41	J-686	-0.27	914.37	1,035.03	20	54.86	P-731	5.37
J-682	1,001.51	1,566.72	J-686	12.31	943.41	1,035.04	20	34.47	P-733	6.61
J-566	1,000.00	1,566.72	J-582	13.46	791.07	1,036.03	20	57.46	P-637	6.61
J-568	1,001.51	1,845.45	J-582	10.02	783.12	1,037.59	20	40.01	P-639	4.96
J-588	1,000.00	1,877.48	J-692	2.86	921.59	1,040.34	20	61.76	P-739	5.57
J-618	1,001.51	1,043.00	J-618	20	796.16	1,042.33	20	20.03	P-683	8.56
J-678	1,001.51	1,878.69	J-686	9.27	936.4	1,050.29	20	42.1	P-735	5.21
J-676	1,001.51	1,957.18	J-692	8.14	933.79	1,051.17	20	45.86	P-737	5.13
J-880	1,001.46	1,063.45	J-872	16.7	828.55	1,063.45	20	32.09	P-925	10
J-620	1,001.51	1,080.01	J-620	20	786.16	1,080.03	20	20	P-681	7.97

ATTACHMENT A

ID	Total Demand (gpm)	Available Flow at Hydrant (gpm); maintains 20 psi in water main adjacent to hydrant	Critical Node ID	Critical Node Pressure (psi) at Available Fire Flow	Critical Node Head (ft)	Design Flow (gpm); Max Flow at hydrant to Maintain Minimum System Pressure at 20	Design Pressure (psi)	Design Fire Node Pressure (psi)	Critical Pipe ID	Critical Pipe Velocity (ft/s)
J36	1,000.00	9,287.46	J36	20	936.16	1,080.56	20	44.98	P117	10.05
J-924	1,000.00	1,298.35	J-924	20	661.16	1,081.78	20	20		
J-256	1,001.32	59.76	J-256	20	1,087.98	1,083.29	20	-18.68	P-225	6.91
J-520	1,001.62	879.65	J-520	20	546.16	1,134.03	20	20.04		
J-564	1,000.00	1,142.08	J-564	20	661.16	1,142.35	20	20	P-1019	7.29
J-496	1,001.62	2,605.58	J-564	14.88	649.34	1,213.25	20	26.5	P-601	4.05
J-1002	1,000.00	1,241.20	J-1002	20	826.16	1,238.49	20	20.06	P-1079	7.48
J-640	1,001.62	1,434.61	J-642	11.33	616.16	1,254.06	20	29.18	P-623	8
J-632	1,001.62	1,448.73	J-638	11.33	626.16	1,254.38	20	29.22		
J-872	1,001.46	1,259.44	J-872	20	836.16	1,259.44	20	20.24	P-921	10
J-712	1,001.46	1,525.03	J-714	14.37	733.16	1,270.87	20	25.65	P-761	5.34
J-494	1,001.62	1,928.94	J-564	19.72	660.51	1,287.18	20	24.63	P-479	4.17
J-710	1,001.46	1,289.36	J-710	20	726.16	1,289.10	20	20.01	P-755	8.23
J-538	1,001.62	1,823.39	J-538	20	556.16	1,313.52	20	45.32	P-585	10
J-622	1,001.51	1,429.19	J-620	16.37	777.78	1,317.47	20	25.25	P-679	7.96
J-652	1,001.62	1,929.74	J-564	19.69	660.44	1,318.18	20	31.46	P-609	4.8
J-654	1,001.62	1,508.72	J-564	19.96	661.07	1,318.18	20	23.9	P-607	8.41
J-624	1,001.51	1,482.44	J-582	18.78	803.35	1,333.82	20	25.32	P-675	8.86
J-644	1,001.62	1,533.82	J-642	13.75	621.73	1,342.91	20	26.51	P-621	5.71
J-708	1,001.46	1,787.21	J-714	10.37	723.92	1,353.88	20	32.02	P-757	5.2
J-650	1,001.62	2,026.93	J-564	19.61	660.26	1,361.41	20	34.47	P-611	4.89
J-870	1,001.46	1,362.22	J-870	20	826.16	1,362.37	20	20	P-919	9.79
J-716	1,001.46	1,541.07	J-714	16.37	737.79	1,362.67	20	23.78	P-763	6
J-544	1,001.62	1,405.41	J-546	20	566.16	1,405.41	20	34.47	P-577	10
J318	1,005.43	1,407.91	J318	20	1,086.16	1,407.18	20	20.04	P427	8.98
J-646	1,001.62	1,766.95	J-638	11.14	625.71	1,407.89	20	31.36	P-619	6.61
J-634	1,001.62	1,711.87	J-638	13.47	631.09	1,431.41	20	26.93	P-615	4.68
J-288	1,001.65	1,438.54	J-288	20	533.16	1,438.55	20	73.58	P699	10
J-636	1,001.62	1,930.99	J-564	19.73	660.53	1,445.87	20	32.13	P-611	4.2
J-704	1,001.46	1,780.47	J-714	13.23	730.53	1,447.76	20	30.09	P-753	5.05
J-706	1,001.46	1,536.72	J-714	18.31	742.25	1,447.76	20	23.3	P-751	9.24

ID	Total Demand (gpm)	Available Flow at Hydrant (gpm); maintains 20 psi in water main adjacent to hydrant	Critical Node ID	Critical Node Pressure (psi) at Available Fire Flow	Critical Node Head (ft)	Design Flow (gpm); Max Flow at hydrant to Maintain Minimum System Pressure at 20	Design Pressure (psi)	Design Fire Node Pressure (psi)	Critical Pipe ID	Critical Pipe Velocity (ft/s)
J-656	1,001.62	2,262.61	J-564	19.21	659.34	1,451.22	20	31.67	P-601	4.65
J-658	1,001.62	1,717.70	J-564	19.83	660.76	1,451.22	20	24.12	P-603	9.26
J-868	1,001.46	1,451.93	J-1002	-23.45	725.89	1,451.92	20	73.34	P-915	10
J534	1,000.00	1,459.55	J534	20	1,089.27	1,457.98	20	20.07	P831	8.84
J-648	1,001.62	1,820.07	J-638	11.32	626.12	1,466.70	20	29.61	P-617	7.72
J-702	1,001.46	1,772.47	J-714	14.06	732.44	1,473.40	20	29.2	P-749	4.99
J18	1,000.00	1,540.61	J-918	19.26	874.44	1,495.73	20	20.8	P29	4.24
J-918	1,001.46	1,499.98	J-918	20	876.16	1,497.20	20	20.05	P-939	4.25
J-556	1,001.62	169,901.23	J-556	20.05	606.28	1,504.06	20	20.07	P-573	9.6
J-796	1,001.46	1,523.73	J-836	11.29	726.06	1,523.66	20	39.02	P-821	10.01
J-798	1,001.46	1,525.03	J-836	11.29	726.06	1,524.89	20	37.36	P-827	10
J-800	1,001.46	1,526.38	J-836	11.29	726.07	1,526.23	20	36.18	P-829	10
J-722	1,001.46	1,533.33	J-722	20	716.16	1,533.56	20	19.99	P-767	9.79
J306	1,005.43	1,361.80	J306	20	1,091.16	1,538.06	20	20.07		
J-490	1,001.62	2,649.40	J-564	19.61	660.25	1,544.02	20	37.73	P-475	5.84
J-492	1,001.62	1,566.72	J-564	19.91	660.94	1,544.02	20	31.15	P-477	9.86
J-546	1,001.62	35,281.74	J-546	20	566.16	1,546.52	20	20.05	P-579	9.87
J342	1,000.00	1,556.84	J342	20	650.16	1,557.10	20	19.98	P847	9.94
J344	1,000.00	1,585.92	J342	18.05	645.65	1,557.10	20	21.99	P837	6.05
J544	1,000.00	1,573.05	J342	18.92	647.66	1,557.10	20	21.08	P499	7.8
J-114	1,001.02	4,456.25	J-114	20	1,066.16	1,560.63	20	62.52	P-57	10
J-122	1,001.02	1,563.65	J-120	10.6	998.47	1,563.65	20	50.24	P-65	10
J-462	1,001.46	1,563.79	J-714	16.35	737.74	1,563.79	20	30.95	P-537	10
J-926	1,000.93	1,563.93	J-934	20	666.16	1,563.93	20	47.87	P-1001	10
J-956	1,000.00	1,564.68	J-134	6.37	1,094.69	1,564.68	20	67.89	P-1029	10
J-756	1,000.93	1,564.86	J-714	17.4	740.16	1,564.86	20	47.48	P-779	10
J-124	1,001.02	1,565.70	J-120	11.55	1,000.65	1,565.70	20	50.65	P-69	10
J-134	1,001.02	2,670.81	J-134	20	1,126.16	1,565.70	20	33.54	P-121	10
J-444	1,000.00	1,565.79	J-446	16.97	649.16	1,565.79	20	42.89	P-521	10
J-448	1,000.93	1,565.79	J-714	19.65	745.35	1,565.79	20	43.28	P-523	10
J-928	1,000.93	2,321.09	J-928	20	656.16	1,565.79	20	48.51	P-1005	10

ATTACHMENT A

ID	Total Demand (gpm)	Available Flow at Hydrant (gpm); maintains 20 psi in water main adjacent to hydrant	Critical Node ID	Critical Node Pressure (psi) at Available Fire Flow	Critical Node Head (ft)	Design Flow (gpm); Max Flow at hydrant to Maintain Minimum System Pressure at 20	Design Pressure (psi)	Design Fire Node Pressure (psi)	Critical Pipe ID	Critical Pipe Velocity (ft/s)
J-464	1,001.46	1,566.72	J-714	15.77	736.4	1,566.71	20	35.53	P-539	10
J-730	1,000.00	1,566.71	J356	13.5	736.16	1,566.71	20	63.42	P-887	10
J356	1,000.00	1,566.71	J356	20	751.16	1,566.71	20	28.45	P531	10
J40	1,000.00	1,566.71	J36	17.73	930.91	1,566.71	20	50.69	P75	10
J46	1,000.00	1,566.71	J42	13.25	870.57	1,566.71	20	57.16	P81	10
J492	1,000.00	1,566.71	J-714	17.27	739.85	1,566.71	20	32.25	P769	10
J-128	1,001.02	1,566.72	J-120	10.93	999.21	1,566.72	20	57.19	P-71	10
J-322	1,001.65	2,237.65	J-322	20	526.16	1,566.72	20	53.19	P-407	10
J-446	1,000.93	1,566.72	J-446	20	656.16	1,566.72	20	27.41	P-527	10
J-456	1,001.46	1,566.72	J-456	20	696.16	1,566.72	20	23.29	P-531	10
J-466	1,001.46	1,566.72	J-714	18.76	743.29	1,566.72	20	27.72	P-541	10
J-488	1,001.62	1,566.72	J-564	896.61	2,684.27	1,566.72	20	44.77	P-473	10
J-526	1,001.62	1,566.72	J-526	20	546.16	1,566.72	20	52.31	P-553	10
J-550	1,001.62	18,045.55	J-556	441.84	1,579.71	1,566.72	20	41.62	P-575	10
J-752	1,000.93	1,566.72	J-752	20	676.16	1,566.72	20	43.58	P-787	10
J-754	1,000.93	1,566.72	J-714	18.9	743.61	1,566.72	20	45.77	P-789	10
J-766	1,001.46	1,566.72	J-766	20	696.16	1,566.72	20	21.3	P-793	10
J-790	1,000.93	1,566.72	J-790	20	726.16	1,566.72	20	34.48	P-823	10
J-802	1,001.46	1,566.72	J-836	16.74	738.64	1,566.72	20	34.26	P-831	10
J-858	1,000.93	1,566.72	J-858	20	716.16	1,566.72	20	39.26	P-825	10
J-890	1,001.46	1,566.72	J-890	20	726.16	1,566.72	20	32.79	P-985	10
J-96	1,001.02	1,566.72	J-94	17.5	980.39	1,566.72	20	72.46	P-85	10
J354	1,000.00	1,566.71	J356	17.83	746.16	1,566.72	20	34.25	P529	10
J358	1,000.00	1,566.72	J358	20	716.16	1,566.72	20	25.63	P541	10
J360	1,000.00	1,566.72	J364	18.75	741.28	1,566.72	20	27.15	P545	10
J362	1,000.00	1,566.72	J362	20	708.16	1,566.72	20	23.45	P539	10
J364	1,000.00	1,566.72	J364	20	744.16	1,566.72	20	25.61	P543	10
J42	1,000.00	587,004.69	J42	20.01	886.19	1,566.72	20	48.79	P77	10
J44	1,000.00	1,566.72	J42	13.75	871.73	1,566.72	20	55.66	P79	10
J48	1,000.00	1,566.72	J42	19.01	883.88	1,566.72	20	52.5	P83	10
J50	1,000.00	1,566.72	J42	16.86	878.91	1,566.72	20	57.4	P85	10

ATTACHMENT A

ID	Total Demand (gpm)	Available Flow at Hydrant (gpm); maintains 20 psi in water main adjacent to hydrant	Critical Node ID	Critical Node Pressure (psi) at Available Fire Flow	Critical Node Head (ft)	Design Flow (gpm); Max Flow at hydrant to Maintain Minimum System Pressure at 20	Design Pressure (psi)	Design Fire Node Pressure (psi)	Critical Pipe ID	Critical Pipe Velocity (ft/s)
J530	1,000.00	1,566.72	J-714	19.52	745.06	1,566.72	20	26.01	P805	10
J566	1,000.00	1,566.72	J-918	-0.43	829.01	1,566.72	20	70.22	P871	10
J-920	1,001.46	2,047.50	J-918	11.33	856.16	1,576.06	20	28.74	P-941	4.48
J-554	1,001.62	1,565.09	J-556	20	606.16	1,590.54	20	20.06		
J-460	1,001.46	1,899.36	J-714	14.51	733.48	1,602.56	20	29.79	P-535	5.44
J-540	1,001.62	21,329.76	J-540	20	556.16	1,605.02	20	24.93	P-583	10
J-912	1,001.46	2,579.49	J-918	2.67	836.16	1,608.77	20	37.42	P-943	4.57
J-316	1,001.65	1,633.47	J-316	20	526.16	1,633.47	20	40.6	P-401	10
J-458	1,001.46	1,913.83	J-714	15.23	735.14	1,648.00	20	28.78	P-533	5.84
J-480	1,000.93	1,684.91	J-480	20	611.16	1,684.90	20	19.81		
J-910	1,001.46	2,805.42	J-918	2.67	836.16	1,691.33	20	37.37	P-945	4.81
J-718	1,001.46	1,986.71	J-714	14.39	733.21	1,759.68	20	26.15	P-765	8.87
J-234	1,001.32	3,582.27	J-238	-6	736.16	1,769.66	20	46		
J-908	1,001.46	3,519.26	J-918	-6	816.16	1,770.63	20	46.06	P-947	5.04
J-120	1,000.00	962,464.69	J-120	19.26	1,018.44	1,797.60	20	19.99		
J-126	1,001.02	1,566.71	J-120	9.74	996.48	1,798.62	20	32.89		
J-486	1,001.62	3,120.36	J-564	19.6	660.23	1,798.93	20	44.12	P-471	7.48
J-276	1,001.65	2,147.15	J-276	20	536.16	1,801.19	20	19.9		
J466	1,000.00	1,817.58	J466	20	531.11	1,817.58	20	72.63	P745	10
J-454	1,001.46	2,265.68	J-714	12.42	728.66	1,817.74	20	35.09	P-529	7.23
J-906	1,001.46	3,517.80	J-918	-6	816.16	1,839.14	20	46.03	P-949	5.24
J128	1,000.00	2,771.84	J-192	-6.26	1,055.54	1,845.79	20	62.41	P-1209	5.27
J-196	1,001.32	3,278.74	J-192	-24.31	1,013.90	1,847.17	20	74.98	P-241	5.33
J-202	1,001.32	3,026.30	J-192	-15.01	1,035.37	1,847.17	20	70.21	P-235	5.32
J-200	1,001.32	2,827.23	J-192	-8.08	1,051.35	1,847.18	20	58.63	P-237	5.33
J-720	1,001.46	1,918.96	J-714	13.65	731.5	1,893.80	20	26.95	P-769	9.87
J-248	1,001.32	2,277.55	J-192	12.71	1,099.34	1,924.53	20	33.24		
J-402	1,000.93	6,038.38	J-714	16.68	738.48	1,980.77	20	60.01	P-453	10.01
J-226	1,001.32	848,166.00	J-228	6.43	984.84	1,991.63	20	33.03		
J-1006	1,000.00	3,190.78	J-192	-6.25	1,055.58	1,996.38	20	83.38	P-215	8.8
J444	1,000.00	1,998.56	J-294	19.51	540.03	1,998.56	20	70.56	P747	10

ID	Total Demand (gpm)	Available Flow at Hydrant (gpm); maintains 20 psi in water main adjacent to hydrant	Critical Node ID	Critical Node Pressure (psi) at Available Fire Flow	Critical Node Head (ft)	Design Flow (gpm); Max Flow at hydrant to Maintain Minimum System Pressure at 20	Design Pressure (psi)	Design Fire Node Pressure (psi)	Critical Pipe ID	Critical Pipe Velocity (ft/s)
J84	1,000.00	2,016.65	J-874	19.01	843.87	2,016.65	20	44.17	P155	10
J-552	1,001.62	2,293.93	J-556	11.33	586.16	2,023.77	20	28.69	P-569	8
J-508	1,002.25	1,671.95	J-508	20	566.16	2,028.91	20	20.34		
J-244	1,001.32	2,675.68	J-192	-3.84	1,061.14	2,034.42	20	77.42	P-1089	8.44
J-452	1,001.46	2,242.28	J-714	12.72	729.36	2,044.99	20	34.67	P-525	9.12
J550	1,000.00	2,061.42	J-714	12.89	729.74	2,061.42	20	38.1	P841	10
J116	1,000.00	4,561.78	J-918	-14.73	796.01	2,067.42	20	66.44	P-981	5.46
J120	1,000.00	4,421.92	J-918	-2.51	824.2	2,067.42	20	49.55	P205	3.49
J122	1,000.00	4,532.03	J-918	-3.89	821.01	2,067.42	20	54.79	P203	4.33
J124	1,000.00	4,824.19	J-918	-7.58	812.5	2,067.42	20	56.08	P199	3.03
J118	1,000.00	4,700.85	J-918	-6.02	816.1	2,067.43	20	53.95	P211	2.54
J476	1,000.00	4,268.93	J-918	-12.68	800.73	2,067.43	20	62.48	P749	5.81
J-748	1,001.46	4,893.24	J-918	-12.56	801.01	2,068.94	20	60.82	P-983	5.09
J-218	1,001.32	2,062.67	J-228	10.64	994.56	2,073.47	20	57.3	P-201	10.06
J-548	1,001.62	2,235.46	J-556	15.45	595.65	2,084.47	20	25.07	P-567	7.94
J-930	1,000.93	1,566.72	J-930	20	646.16	2,104.36	20	19.97		
J-210	1,001.32	3,100.01	J-192	-0.59	1,068.63	2,111.80	20	68.8	P-211	6.74
J-450	1,000.93	2,755.27	J-714	12.07	727.86	2,114.75	20	37.37	P-791	10
J-212	1,001.32	2,598.37	J-192	15.79	1,106.44	2,128.20	20	44.05		
J-536	1,001.62	2,469.96	J-556	18.86	603.52	2,189.99	20	23.58	P-563	7.01
J-534	1,001.62	190,199.95	J-556	27,523.21	64,079.98	2,203.25	20	22.9	P-1021	7.81
J464	1,000.00	2,226.46	J464	20	529.91	2,226.46	20	60.05	P729	10
J-532	1,001.62	105,586.30	J-532	19.99	576.14	2,240.10	20	20.27	P-561	7.45
J94	1,000.00	2,269.77	J94	20	801.16	2,269.77	20	33.84	P157	10
J-484	1,001.62	290,977.91	J-556	87.78	762.58	2,272.30	20	25.86	P-469	9.65
J-346	1,001.65	2,287.81	J-346	20	546.16	2,287.82	20	65.33	P-373	10
J-364	1,002.25	5,761.29	J-364	20	546.16	2,333.00	20	68.79	P-271	10.02
J-934	1,000.93	2,335.36	J-934	20	666.16	2,335.36	20	19.94		
J-368	1,002.25	2,363.53	J-368	20	546.16	2,363.52	20	63.98	P-265	10.01
J-758	1,000.93	2,958.48	J-714	12.67	729.25	2,380.96	20	33.52		
J-878	1,001.46	2,417.56	J-878	20	846.16	2,416.12	20	20.01	P-923	9.02

ATTACHMENT A

ID	Total Demand (gpm)	Available Flow at Hydrant (gpm); maintains 20 psi in water main adjacent to hydrant	Critical Node ID	Critical Node Pressure (psi) at Available Fire Flow	Critical Node Head (ft)	Design Flow (gpm); Max Flow at hydrant to Maintain Minimum System Pressure at 20	Design Pressure (psi)	Design Fire Node Pressure (psi)	Critical Pipe ID	Critical Pipe Velocity (ft/s)
J86	1,000.00	2,426.23	J-874	19.95	846.03	2,426.23	20	39.84	P153	10
J-724	1,000.93	2,763.18	J-714	12.92	729.81	2,428.17	20	27.36		
J-946	1,000.00	2,443.36	J546	14.32	662.05	2,443.35	20	50.9	P-993	10
J-332	1,001.65	2,447.99	J-332	20	536.16	2,447.99	20	54.54	P-387	10
J-732	1,000.93	2,447.99	J-874	16.96	839.15	2,447.99	20	56.58	P-889	10
J-898	1,001.46	2,447.99	J-898	20	755.16	2,447.99	20	22.84	P-977	10
J92	1,000.00	2,454.91	J92	20	800.16	2,454.91	20	31.2	P145	10
J-516	1,001.62	2,473.30	J-520	16.1	537.15	2,473.74	20	36.2	P-543	10
J-502	1,002.25	2,477.06	J-502	20	566.16	2,477.01	20	42.45	P-417	10.01
J82	1,000.00	2,494.23	J-874	17.66	840.76	2,494.04	20	42.73	P133	10
J-530	1,001.62	2,590.25	J-532	17.53	570.46	2,514.22	20	23.08	P-557	8.61
J-726	1,000.93	2,837.07	J-714	16.46	737.98	2,565.91	20	25.81	P-775	8.46
J-366	1,002.25	6,207.03	J-366	20	546.16	2,573.97	20	68.76	P-263	10.06
J-528	1,001.62	2,604.04	J-532	19.2	574.31	2,577.88	20	21.06	P-555	9.03
J-216	1,000.00	2,867.98	J-192	14.92	1,104.42	2,595.05	20	39.17		
J554	1,000.00	114,943.12	J554	19.99	636.14	2,627.69	20	20.34	P-599	8.49
J98	1,000.00	2,635.39	J-874	19.33	844.6	2,635.38	20	34.83	P141	10
J-360	1,002.25	2,635.96	J-360	20	546.16	2,636.35	20	60.85	P-277	10
J562	1,000.00	2,642.86	J562	20	525.16	2,642.86	20	35.26	P857	10
J440	1,000.00	2,662.66	J440	20	527.16	2,662.66	20	19.99		
J-182	1,001.32	3,482.84	J-192	-23.76	1,015.16	2,663.64	20	63.78	P-255	7.68
J-180	1,002.25	2,684.82	J-180	20	546.16	2,684.82	20	20		
J514	1,000.00	2,686.26	J514	20	601.51	2,686.26	20	20.04		
J56	1,000.00	21,260.33	J56	20	806.16	2,722.19	20	20.37		
J540	1,000.00	2,608.89	J540	20	634.16	2,724.71	20	20.07		
J424	1,000.00	2,729.49	J424	20	530.16	2,729.49	20	49.62	P731	10
J100	1,000.00	2,731.57	J-874	19.59	845.21	2,731.56	20	34.37	P137	10
J90	1,000.00	2,732.90	J90	20	795.16	2,732.88	20	28.58	P147	10
J372	1,000.00	249,118.77	J372	19.95	546.04	2,755.54	20	45.19	P559	10
J-418	1,000.93	731,903.38	J-418	14.89	624.37	2,772.01	20	20.05		
J-932	1,000.93	1,563.01	J-934	20	666.16	2,785.11	20	19.89		

ATTACHMENT A

ID	Total Demand (gpm)	Available Flow at Hydrant (gpm); maintains 20 psi in water main adjacent to hydrant	Critical Node ID	Critical Node Pressure (psi) at Available Fire Flow	Critical Node Head (ft)	Design Flow (gpm); Max Flow at hydrant to Maintain Minimum System Pressure at 20	Design Pressure (psi)	Design Fire Node Pressure (psi)	Critical Pipe ID	Critical Pipe Velocity (ft/s)
J-116	1,001.02	2,796.12	J-116	20	1,046.16	2,796.12	20	20.09		
J-442	1,000.00	899,016.31	J-442	19.35	647.65	2,801.24	20	19.88		
J-290	1,001.65	2,801.78	J-290	20	531.16	2,801.78	20	19.99		
J-16	1,002.25	2,815.26	J-16	20	546.16	2,815.26	20	20		
J-760	1,000.93	3,469.63	J-714	13.49	731.13	2,836.40	20	33.83	P-783	10
J-512	1,002.25	2,840.74	J-512	20	566.16	2,840.81	20	36.99	P-431	10.01
J516	1,000.00	2,849.25	J516	20	604.83	2,846.71	20	20.05	P811	9.65
J-874	1,001.46	2,861.46	J-874	20	846.16	2,858.78	20	20.01	P-913	7.8
J340	1,000.00	2,885.36	J340	20	634.16	2,877.29	20	20.1	P503	7.8
J374	1,000.00	2,880.07	J374	20	546.16	2,880.04	20	61.85	P-371	10.01
J-420	1,000.93	2,889.64	J-420	20	636.16	2,880.87	20	20.1	P505	6.55
J62	1,000.00	3,445.49	J56	-1.05	757.57	2,882.39	20	41.92		
J96	1,000.00	2,913.96	J-874	19.39	844.76	2,913.94	20	31.81	P139	10
J518	1,000.00	2,311.73	J518	20	605.08	2,929.85	20	20.05		
J552	1,000.00	2,936.80	J546	16.18	666.34	2,937.19	20	40.84	P843	9.98
J438	1,000.00	2,969.48	J438	20	528.16	2,969.48	20	19.98		
J88	1,000.00	2,977.23	J88	20	787.16	2,977.24	20	27.28	P151	10
J-118	1,001.02	3,013.20	J-118	20	1,046.16	3,013.20	20	20.12		
J-10	1,002.25	3,165.21	J-180	20	546.16	3,073.19	20	19.99		
J-92	1,001.02	3,109.26	J-134	-0.18	1,079.57	3,095.85	20	51.34	P-79	10.01
J-80	1,001.02	3,104.16	J-82	7.36	997	3,097.29	20	33.71	P-95	9.99
J-146	1,001.32	6,301.52	J-192	-39.57	978.67	3,099.34	20	79.4	P-33	7.75
J-950	1,000.00	4,368.83	J-192	-0.99	1,067.71	3,099.84	20	52.73		
J-86	1,001.02	3,102.31	J-134	17.97	1,121.46	3,100.74	20	30.82	P-89	10.01
J-78	1,001.02	3,105.36	J-82	-14.51	946.51	3,102.47	20	61.52	P-97	10
J-64	1,001.02	3,612.76	J-64	20	776.16	3,114.17	20	28.14	P-109	10.02
J-144	1,001.32	5,972.20	J-192	-30.7	999.14	3,131.57	20	71.62	P-37	4.72
J-84	1,001.02	3,140.58	J-84	20	1,056.16	3,145.60	20	20.1		
J-794	1,001.46	3,145.93	J-836	11.29	726.06	3,149.88	20	36.43	P-1059	10.09
J-142	1,001.32	5,973.56	J-192	-29.86	1,001.08	3,150.59	20	71.38	P-39	4.78
J526	1,000.00	2,157.42	J340	20.86	636.13	3,153.16	20	21.04		

ATTACHMENT A

ID	Total Demand (gpm)	Available Flow at Hydrant (gpm); maintains 20 psi in water main adjacent to hydrant	Critical Node ID	Critical Node Pressure (psi) at Available Fire Flow	Critical Node Head (ft)	Design Flow (gpm); Max Flow at hydrant to Maintain Minimum System Pressure at 20	Design Pressure (psi)	Design Fire Node Pressure (psi)	Critical Pipe ID	Critical Pipe Velocity (ft/s)
J460	1,000.00	3,158.24	J460	20	527.21	3,158.78	20	19.98	P721	8.96
J560	1,000.00	3,233.09	J-294	17.44	535.24	3,163.82	20	22.71	P859	9.06
J338	1,000.00	209,012.61	J-420	3,563.68	8,814.52	3,184.41	20	21.76	P879	6.55
J-476	1,000.93	4,250.93	J-924	20	661.15	3,185.25	20	37.81	P-467	7.01
J-12	1,002.25	3,202.91	J-12	20	556.16	3,202.91	20	19.98		
J-472	1,000.93	512,744.09	J-472	20.42	587.13	3,209.76	20	19.95		
J-340	1,002.25	5,402.31	J-340	20	546.16	3,224.91	20	57.11	P-379	10
J-876	1,001.46	3,269.61	J-876	20	846.16	3,269.13	20	20.87	P-935	10
J-60	1,001.32	4,455.95	J-64	12.22	758.2	3,283.91	20	49.49	P-115	10.05
J458	1,000.00	3,298.56	J458	20	527.24	3,299.14	20	19.98	P697	9.36
J442	1,000.00	3,310.92	J438	20	528.16	3,311.52	20	19.98	P719	9.39
J-792	1,000.93	3,319.11	J-836	19.59	745.22	3,319.20	20	33.19	P-819	10.1
J-866	1,001.46	4,315.50	J-874	13.13	830.29	3,339.70	20	32.72	P-911	7.32
J558	1,000.00	3,355.03	J558	20	525.16	3,355.60	20	19.98	P851	7.35
J584	1,000.00	3,463.40	J584	20	613.16	3,366.45	20	19.97		
J-762	1,000.93	2,564.48	J-714	14.21	732.79	3,374.07	20	30.35		
J-992	1,000.00	3,377.45	J-992	20	622.74	3,377.45	20	20		
J-864	1,001.46	4,379.63	J-874	13.97	832.23	3,400.46	20	31.93	P-909	7.22
J432	1,000.00	3,443.23	J432	20	530.16	3,443.89	20	19.98	P687	9.87
J580	1,000.00	280,686.81	J580	20.16	609.54	3,444.47	20	19.96		
J-474	1,000.93	2,569.12	J-474	20	597.16	3,464.23	20	19.91		
J-786	1,000.93	3,508.87	J-858	20	716.16	3,508.74	20	31.39	P-815	10.06
J578	1,000.00	3,550.98	J578	20	602.51	3,550.96	20	19.9		
J-130	1,001.02	1,451.21	J-102	50.72	1,197.05	3,562.55	20	39.93	P-75	10.03
J-944	1,000.00	2,936.90	J546	13.93	661.16	3,586.99	20	25.89		
J-66	1,001.02	3,929.92	J-64	14.93	764.46	3,612.70	20	26.46		
J-22	1,002.25	3,638.60	J-22	20	556.16	3,638.60	20	19.97		
J-784	1,000.93	3,691.68	J-784	20	706.16	3,691.61	20	29.09	P-813	10.04
J-20	1,002.25	3,702.15	J-20	20	556.16	3,703.32	20	19.97	P-415	9.93
J-948	1,000.00	3,722.81	J-948	20	661.16	3,722.76	20	19.99		
J-62	1,001.02	4,038.06	J-64	16.01	766.94	3,743.92	20	25.86		

ATTACHMENT A

ID	Total Demand (gpm)	Available Flow at Hydrant (gpm); maintains 20 psi in water main adjacent to hydrant	Critical Node ID	Critical Node Pressure (psi) at Available Fire Flow	Critical Node Head (ft)	Design Flow (gpm); Max Flow at hydrant to Maintain Minimum System Pressure at 20	Design Pressure (psi)	Design Fire Node Pressure (psi)	Critical Pipe ID	Critical Pipe Velocity (ft/s)
J370	1,000.00	3,746.96	J370	20	658.16	3,747.05	20	20.13	P553	10
J-782	1,000.93	3,748.41	J-782	20	706.16	3,748.35	20	26.94	P-811	10.03
J-764	1,000.93	4,053.58	J-714	16.59	738.3	3,783.99	20	26.39	P-785	8.54
J-68	1,001.02	3,829.92	J-64	19.95	776.04	3,826.64	20	20.27		
J-780	1,000.93	4,046.76	J-780	20	706.16	3,854.15	20	22.83	P-809	10.01
J-768	1,000.93	4,089.68	J-714	17.49	740.36	3,879.82	20	24.91	P-797	8.37
J-734	1,000.93	4,784.09	J-874	16.58	838.26	3,897.52	20	36.78	P-903	8.48
J-778	1,000.93	3,876.20	J-778	20	706.16	3,912.21	20	19.43	P-807	9.86
J-774	1,000.93	3,892.24	J-774	20	696.16	3,920.16	20	19.49	P-803	9.28
J-736	1,000.93	4,504.63	J-874	16.95	839.12	3,936.03	20	35.6	P-891	8.47
J68	1,000.00	4,451.79	J56	4.37	770.08	3,943.76	20	37.78		
J-896	1,001.46	3,942.44	J-898	11.77	736.16	3,952.91	20	31.66	P-901	9.95
J-770	1,000.93	3,964.21	J-770	20	686.16	3,987.32	20	19.53	P-799	8.92
J-308	1,001.65	3,989.37	J-308	20	536.16	3,989.37	20	19.97		
J-776	1,000.93	4,004.13	J-778	19.63	705.3	4,016.94	20	19.77	P-805	9.85
J-772	1,000.93	4,034.03	J-774	19.25	694.42	4,020.98	20	20.26	P-801	9.28
J-176	1,001.32	4,570.03	J-64	10.04	753.17	4,025.20	20	40.58		
J-58	1,001.32	4,455.62	J-64	12.22	758.21	4,025.20	20	35.62		
J-738	1,000.93	4,607.85	J-874	17.73	840.91	4,030.92	20	32.78	P-893	8.47
J78	1,000.00	4,328.88	J-134	1.88	1,084.34	4,044.32	20	52.78	P-99	9.3
J-106	1,001.02	4,091.33	J-102	4.71	1,090.86	4,065.72	20	40.34	P-53	10.02
J-70	1,001.02	5,163.13	J-134	7.92	1,098.29	4,075.44	20	33.63		
J-740	1,000.93	4,597.01	J-874	18.48	842.65	4,149.24	20	29.44	P-897	8.49
J-304	1,001.65	4,158.04	J-304	20	536.16	4,158.93	20	19.97	P-355	7.46
J70	1,000.00	4,616.35	J56	6.89	775.9	4,166.08	20	35.13		
J76	1,000.00	5,065.54	J-134	9.94	1,102.93	4,177.39	20	32.13		
J-52	1,001.32	1,566.72	J-192	14.8	1,104.15	4,197.01	20	38.85		
J-54	1,001.32	7,528.64	J-192	-4.94	1,058.60	4,197.02	20	65.26		
J-298	1,001.65	4,328.53	J-304	17.33	530.01	4,236.13	20	22.71	P-347	8.38
J74	1,000.00	5,156.72	J-134	4.73	1,090.92	4,239.30	20	26.54		
J-296	1,001.65	4,263.05	J-304	20	536.16	4,263.05	20	19.97		

ATTACHMENT A

ID	Total Demand (gpm)	Available Flow at Hydrant (gpm); maintains 20 psi in water main adjacent to hydrant	Critical Node ID	Critical Node Pressure (psi) at Available Fire Flow	Critical Node Head (ft)	Design Flow (gpm); Max Flow at hydrant to Maintain Minimum System Pressure at 20	Design Pressure (psi)	Design Fire Node Pressure (psi)	Critical Pipe ID	Critical Pipe Velocity (ft/s)
J-742	1,000.93	4,553.50	J-874	19.07	844.02	4,266.11	20	26.28	P-899	8.97
J-328	1,001.65	4,281.42	J-332	20	536.16	4,281.41	20	19.97		
J72	1,000.00	4,623.96	J-134	16.42	1,117.89	4,285.69	20	29.44		
J-886	1,001.46	4,320.49	J-886	20	746.16	4,288.44	20	20.17	P-961	9.1
J-888	1,001.46	4,351.92	J-888	20	746.16	4,331.54	20	20.11	P-965	9.48
J-432	1,000.93	294,347.59	J-714	25.52	758.89	4,344.93	20	24.29		
J-892	1,001.46	4,392.02	J-892	20	746.16	4,380.15	20	20.06	P865	9.9
J-430	1,000.93	4,867.65	J-714	17.1	739.46	4,409.28	20	26.56		
J-392	1,000.93	6,946.02	J-714	15.95	736.82	4,419.85	20	50.24	P-439	10.05
J-44	1,001.32	6,173.60	J-238	-5.83	736.54	4,437.01	20	49.85		
J-282	1,001.65	4,533.51	J-282	20	536.16	4,533.51	20	19.98		
J-380	1,002.25	4,752.66	J-382	15.67	556.16	4,552.63	20	25.27		
J-894	1,001.46	4,572.64	J-836	11.4	726.32	4,572.20	20	32.69	P-1057	9.97
J-286	1,001.65	4,595.34	J-304	20	536.16	4,595.34	20	19.98		
J-424	1,000.93	5,395.72	J-714	16.86	738.91	4,701.29	20	28.95		
J-372	1,002.25	4,899.57	J-372	20	554.16	4,899.57	20	19.97		
J-414	1,000.93	4,940.47	J-414	20	586.16	4,940.47	20	20.11		
J-406	1,000.93	3,084.71	J-406	20	576.16	4,966.46	20	20.12		
J-350	1,001.65	4,984.97	J-350	20	536.16	4,984.98	20	19.98		
J-112	1,001.02	5,014.02	J-112	20	1,076.16	5,013.85	20	20.67		
J-46	1,001.32	8,696.75	J-192	-6.57	1,054.83	5,079.06	20	58.82	P-1173	7.69
J-404	1,000.93	222,186.39	J-714	35.03	780.85	5,161.11	20	24.91		
J-400	1,000.93	6,553.03	J-714	13.92	732.12	5,232.18	20	39.39		
J-40	1,002.25	5,793.29	J-40	20	536.16	5,269.93	20	19.92		
J-110	1,001.02	7,093.79	J-102	5.38	1,092.41	5,325.53	20	36.27		
J-362	1,002.25	5,344.25	J-362	20	546.16	5,344.70	20	20.74		
J-386	1,002.25	47,792.80	J-714	38.58	789.03	5,385.96	20	37.48	P-435	10
J-396	1,000.93	43,448.77	J-714	23.6	754.47	5,456.52	20	40.66	P-445	10
J-38	1,002.25	5,517.64	J-38	20	536.16	5,517.63	20	19.88		
J-358	1,002.25	5,837.36	J-358	20	546.16	5,837.41	20	20.08		
J-266	1,002.25	4,603.60	J-266	20	546.16	6,357.84	20	20.35		

ATTACHMENT A

ID	Total Demand (gpm)	Available Flow at Hydrant (gpm); maintains 20 psi in water main adjacent to hydrant	Critical Node ID	Critical Node Pressure (psi) at Available Fire Flow	Critical Node Head (ft)	Design Flow (gpm); Max Flow at hydrant to Maintain Minimum System Pressure at 20	Design Pressure (psi)	Design Fire Node Pressure (psi)	Critical Pipe ID	Critical Pipe Velocity (ft/s)
J-74	1,001.02	5,598.29	J-82	-26.17	919.61	6,577.48	20	-26.96		
J-34	1,002.25	8,998.17	J-192	1.79	1,074.14	6,615.81	20	49.05	P-145	9.75
J-32	1,002.25	6,896.18	J-192	1.87	1,074.32	6,635.23	20	48.88	P-149	9.71
J-262	1,002.25	7,064.43	J-262	20	546.16	7,064.33	20	19.94		

ATTACHMENT A

2040 Fire Flow with Capital Improvement Plan

ID	Total Demand (gpm)	Available Flow at Hydrant (gpm); maintains 20 psi in water main adjacent to hydrant	Critical Node ID	Critical Node Pressure (psi) at Available Fire Flow	Critical Node Head (ft)	Design Flow (gpm); Max Flow at hydrant to Maintain Minimum System Pressure at 20 psi	Design Pressure (psi)	Design Fire Node Pressure (psi)	Critical Pipe ID	Critical Pipe Velocity (ft/s)
J-980	1,000.00	385.18	J-686	12.85	944.65	385.22	20	85.94	P-1053	10.03
J-662	1,000.00	573.37	J-618	18.46	792.6	574.21	20	27.97	V-90092	10.09
J-582	1,001.51	662.28	J-582	20	806.16	659.16	20	19.99	P-651	4.21
J-274	1,001.65	715.68	J-274	20	536.16	715.65	20	18.84		
J-630	1,000.00	722.88	J-630	20	646.16	723.06	20	34.97	V-90072	10.1
J-642	1,001.62	758.87	J-642	20	636.16	759.09	20	19.99	P-625	8.61
J-638	1,001.62	761.79	J-638	20	646.16	761.77	20	20	P-629	8.64
J-606	1,001.51	873.77	J-686	11.19	940.82	873.77	20	67.53	P-669	10
J-600	1,001.51	875.26	J-686	15.08	949.81	875.27	20	59.52	P-659	10
J-608	1,001.51	878.26	J-686	17.67	955.78	878.27	20	52.48	P-661	10
J-614	1,001.51	879.77	J-612	20	816.16	879.77	20	35.27	P-663	10
J-696	1,001.51	877.64	J-696	20	956.16	880.18	20	19.96	P-717	7.33
J-336	1,001.62	232,035.67	J-336	20.11	536.41	881.28	20	69.42	P-413	10
J-56	1,001.32	1,466.88	J-1000	11.33	616.16	881.28	20	43.18	P-137	10
J-594	1,001.51	881.28	J-686	18.28	957.19	881.28	20	47.44	P-657	10
J-612	1,001.51	881.28	J-612	20	816.16	881.28	20	32.62	P-665	10
J-626	1,001.62	881.28	J-626	20	676.16	881.28	20	39.39	P-635	10
J-628	1,000.00	881.28	J-628	20	646.16	881.28	20	42.36	P-633	10
J-660	1,000.00	881.28	J-612	11.74	797.09	881.28	20	44.37	P-685	10
J-846	1,001.46	881.28	J-838	15.51	735.79	881.28	20	43.11	P-867	10
J-852	1,001.46	881.28	J-838	17.26	739.84	881.28	20	44.52	P-863	10
J-856	1,001.46	881.28	J-838	17.17	739.63	881.28	20	57.08	P-859	10
J-922	1,000.00	881.28	J-582	13.83	791.91	881.28	20	64.46	P-987	10
J-936	1,000.93	881.28	J-936	20	666.16	881.28	20	64.26	P-1017	10
J-578	1,001.51	884.06	J-582	20	806.16	884.6	20	19.99	P-649	5.05
J-692	1,001.51	895.99	J-692	20	961.16	898.59	20	19.97	P-721	4.72
J-694	1,001.51	964.76	J-692	19.48	959.97	922.36	20	20.62	P-719	4.59
J-580	1,001.51	1,577.11	J-582	11.93	787.54	940.78	20	30.37	P-647	5.03
J-698	1,001.51	979.32	J-696	19.46	954.91	945.63	20	20.76	P-715	7.02
J-54	1,001.32	7,546.63	J-192	-4.65	1,059.27	959.47	20	77.75	P-1169	10
J-836	1,001.46	965.94	J-836	20	746.16	967.84	20	19.95	P-877	3.87

ATTACHMENT A

ID	Total Demand (gpm)	Available Flow at Hydrant (gpm); maintains 20 psi in water main adjacent to hydrant	Critical Node ID	Critical Node Pressure (psi) at Available Fire Flow	Critical Node Head (ft)	Design Flow (gpm); Max Flow at hydrant to Maintain Minimum System Pressure at 20 psi	Design Pressure (psi)	Design Fire Node Pressure (psi)	Critical Pipe ID	Critical Pipe Velocity (ft/s)
J-838	1,001.46	971.07	J-838	20	746.16	972.84	20	19.95	P-875	3.93
J-574	1,001.51	1,334.55	J-582	16.01	796.94	983.04	20	27.62	P-643	6.27
J-22	1,002.25	17,514.22	J-690	24.96	974.61	1,002.25	20	72.4	P-159	3.91
J-686	1,001.51	1,004.49	J-686	20	961.16	1,004.39	20	20	P-727	5.65
J-714	1,001.46	1,022.60	J-714	20	746.16	1,020.49	20	20.05	P-759	6.51
J-570	1,001.51	1,746.78	J-582	11.08	785.56	1,020.96	20	36.52	P-641	4.99
J-832	1,001.46	1,946.70	J-836	-6.26	685.55	1,021.11	20	52.2	P-879	3.76
J-834	1,001.46	1,566.72	J-836	-8.02	681.49	1,021.11	20	58.98	P-881	6.52
J-566	1,000.00	1,606.87	J-582	13.46	791.07	1,036.03	20	57.46	P-637	6.61
J-568	1,001.51	3,201.45	J-582	10.02	783.12	1,037.59	20	40.01	P-639	4.96
J-684	1,001.51	1,488.12	J-686	14.73	948.99	1,038.36	20	27.95	P-729	5.35
J-618	1,001.51	1,043.00	J-618	20	796.16	1,042.33	20	20.03	P-683	8.56
J-830	1,001.46	1,923.38	J-836	-3.6	691.69	1,044.64	20	51.28	P-883	3.69
J-680	1,001.51	2,027.99	J-686	-0.73	913.32	1,049.06	20	55.05	P-731	5.24
J-682	1,001.51	1,566.72	J-686	12.12	942.98	1,049.06	20	34.63	P-733	6.7
J-700	1,001.51	1,326.47	J-696	15.85	946.57	1,050.71	20	28.75	P-713	6.45
J-840	1,001.46	1,389.22	J-838	12.5	728.86	1,058.95	20	27.96	P-873	4.55
J-880	1,001.46	1,063.45	J-872	16.7	828.55	1,063.45	20	32.09	P-925	10
J-678	1,001.51	1,934.68	J-686	8.84	935.4	1,066.17	20	42.42	P-735	5.06
J-676	1,001.51	2,019.90	J-686	7.63	932.62	1,071.73	20	46.15	P-737	5
J-588	1,000.00	1,894.86	J-686	2.81	921.47	1,074.06	20	61.74	P-739	5.69
J-620	1,001.51	1,080.01	J-620	20	786.16	1,080.03	20	20	P-681	7.97
J36	1,000.00	61,144.57	J36	15.49	925.74	1,080.56	20	44.98	P117	10.05
J-590	1,001.51	1,347.11	J-686	9.09	935.97	1,081.76	20	56.57	P-709	8.05
J-596	1,001.51	1,395.97	J-686	9.55	937.03	1,082.64	20	56.04	P-707	7.77
J-674	1,001.51	1,598.53	J-686	11.11	940.64	1,091.49	20	46.01	P-703	6.84
J-602	1,000.00	1,253.45	J-686	14.43	948.3	1,091.61	20	55.51	V-90412	8.72
J-598	1,001.51	1,639.91	J-686	8.73	935.15	1,093.26	20	62.75	P-671	6.68
J-828	1,001.46	1,478.56	J-836	11.43	726.39	1,094.96	20	32.3	P-885	3.68
J-610	1,001.51	2,122.14	J-686	6.99	931.12	1,102.96	20	65.36	P-673	5.03
J-690	1,001.51	1,108.98	J-690	20	963.16	1,105.33	20	20.03	P-723	6.62

ATTACHMENT A

ID	Total Demand (gpm)	Available Flow at Hydrant (gpm); maintains 20 psi in water main adjacent to hydrant	Critical Node ID	Critical Node Pressure (psi) at Available Fire Flow	Critical Node Head (ft)	Design Flow (gpm); Max Flow at hydrant to Maintain Minimum System Pressure at 20 psi	Design Pressure (psi)	Design Fire Node Pressure (psi)	Critical Pipe ID	Critical Pipe Velocity (ft/s)
J-616	1,001.51	1,558.24	J-686	10.17	938.46	1,105.94	20	55.3	P-699	7.11
J-672	1,001.51	1,940.53	J-686	9.9	937.86	1,106.46	20	50.05	P-701	5.48
J-664	1,001.51	1,344.40	J-686	10.58	939.41	1,107.98	20	60.22	P-687	8.24
J-666	1,001.51	1,569.10	J-686	15.13	949.92	1,114.34	20	43.85	P-689	6.41
J-668	1,001.51	1,376.92	J-686	17.11	954.48	1,124.23	20	33.1	P-693	8.17
J-670	1,001.51	1,691.38	J-692	14.02	947.35	1,137.34	20	39.69	P-695	5.58
J-826	1,001.46	1,849.61	J-836	3.2	707.39	1,140.35	20	46.08	P-857	3.66
J-842	1,001.46	2,069.44	J-838	-2.41	694.44	1,158.76	20	44.78	P-869	5.26
J-564	1,000.00	1,161.23	J-564	20	661.16	1,161.84	20	20	P-1019	7.41
J-824	1,001.46	1,926.93	J-836	3.46	707.98	1,195.07	20	47.68	P-855	4.08
J-844	1,001.46	2,141.44	J-838	-3.77	691.29	1,222.98	20	46.73	P-871	5.74
J-1002	1,000.00	1,241.20	J-1002	20	826.16	1,238.49	20	20.06	P-1079	7.48
J-872	1,001.46	1,259.44	J-872	20	836.16	1,259.44	20	20.24	P-921	10
J-640	1,001.62	1,435.25	J-642	11.33	616.16	1,265.44	20	29.31	P-623	8.08
J-632	1,001.62	1,449.55	J-638	11.33	626.16	1,269.07	20	28.67		
J-712	1,001.46	1,525.03	J-714	14.37	733.16	1,270.87	20	25.65	P-761	5.34
J-710	1,001.46	1,289.36	J-710	20	726.16	1,289.10	20	20.01	P-755	8.23
J-848	1,001.46	2,075.63	J-838	-7.9	681.76	1,296.39	20	51.76	P-865	6.27
J-494	1,001.62	1,952.23	J-564	19.72	660.51	1,309.50	20	24.64	P-479	4.32
J-822	1,001.46	2,258.73	J-836	-0.31	699.29	1,312.25	20	57.65	P-853	4.99
J-622	1,001.51	1,429.19	J-620	16.37	777.78	1,317.47	20	25.25	P-679	7.96
J-624	1,001.51	1,482.44	J-582	18.78	803.35	1,333.82	20	25.32	P-675	8.86
J-644	1,001.62	1,534.80	J-642	13.75	621.74	1,352.10	20	26.71	P-621	5.75
J-708	1,001.46	1,787.21	J-714	10.37	723.92	1,353.88	20	32.02	P-757	5.2
J-652	1,001.62	1,925.10	J-564	19.64	660.32	1,357.80	20	30.72	P-609	4.82
J-654	1,001.62	1,510.07	J-564	19.97	661.09	1,357.80	20	22.98	P-607	8.67
J306	1,005.43	1,361.80	J306	20	1,091.16	1,361.88	20	27.11	P425	10
J-870	1,001.46	1,362.22	J-870	20	826.16	1,362.37	20	20	P-919	9.79
J-716	1,001.46	1,541.07	J-714	16.37	737.79	1,362.67	20	23.78	P-763	6
J-650	1,001.62	2,031.03	J-564	19.63	660.31	1,369.44	20	34.36	P-611	4.9
J-850	1,001.46	2,013.34	J-838	-4.98	688.51	1,374.39	20	48.63	P-861	6.85

ATTACHMENT A

ID	Total Demand (gpm)	Available Flow at Hydrant (gpm); maintains 20 psi in water main adjacent to hydrant	Critical Node ID	Critical Node Pressure (psi) at Available Fire Flow	Critical Node Head (ft)	Design Flow (gpm); Max Flow at hydrant to Maintain Minimum System Pressure at 20 psi	Design Pressure (psi)	Design Fire Node Pressure (psi)	Critical Pipe ID	Critical Pipe Velocity (ft/s)
J-820	1,001.46	2,335.20	J-836	0.75	701.73	1,383.09	20	56.88	P-851	5.55
J-254	1,001.32	1,074.33	J-256	-11.12	1,016.16	1,404.93	20	12.42	P-223	8.98
J318	1,005.43	1,407.91	J318	20	1,086.16	1,407.18	20	20.04	P427	8.98
J-646	1,001.62	2,096.72	J-638	28.73	666.3	1,408.57	20	31.36	P-619	6.61
J-634	1,001.62	50,670.06	J-126	-19,850.93	-44,913.37	1,432.19	20	26.94	P-615	4.68
J-818	1,001.46	2,393.89	J-836	1.22	702.82	1,445.41	20	56.51	P-849	6.05
J-704	1,001.46	1,780.47	J-714	13.23	730.53	1,447.76	20	30.09	P-753	5.05
J-706	1,001.46	1,536.72	J-714	18.31	742.25	1,447.76	20	23.3	P-751	9.24
J-636	1,001.62	1,928.18	J-564	19.68	660.41	1,451.48	20	32.04	P-611	4.22
J-868	1,001.46	1,451.93	J-1002	-23.45	725.89	1,451.92	20	73.34	P-915	10
J534	1,000.00	1,459.55	J534	20	1,089.27	1,457.98	20	20.07	P831	8.84
J-648	1,001.62	1,822.09	J-638	11.33	626.14	1,467.83	20	29.61	P-617	7.73
J-702	1,001.46	1,772.47	J-714	14.06	732.44	1,473.40	20	29.2	P-749	4.99
J-658	1,001.62	1,720.23	J-564	19.84	660.79	1,494.23	20	23.56	P-603	9.54
J-656	1,001.62	2,267.41	J-564	19.24	659.4	1,494.24	20	31.28	P-601	4.91
J18	1,000.00	1,540.62	J-918	19.26	874.44	1,495.73	20	20.8	P29	4.24
J-918	1,001.46	1,499.98	J-918	20	876.16	1,497.20	20	20.05	P-939	4.25
J-556	1,001.62	602,029.06	J-556	19.71	605.48	1,517.78	20	20.27	P-573	9.69
J-816	1,001.46	2,289.37	J-836	3.57	708.23	1,518.13	20	52.05	P-847	6.65
J-722	1,001.46	1,533.33	J-722	20	716.16	1,533.56	20	19.99	P-767	9.79
J-490	1,001.62	17,353.29	J-564	19.61	660.25	1,546.35	20	37.9	P-475	5.88
J-492	1,001.62	1,566.72	J-564	20	661.16	1,546.35	20	31.3	P-477	9.87
J342	1,000.00	1,556.84	J342	20	650.16	1,557.10	20	19.98	P847	9.94
J344	1,000.00	1,585.92	J342	18.05	645.65	1,557.10	20	21.99	P837	6.05
J544	1,000.00	1,573.05	J342	18.92	647.66	1,557.10	20	21.08	P499	7.8
J-1024	1,000.00	11,716.89	J-1024	20	616.16	1,557.86	20	38.87	P495	10
J-312	1,001.65	2,878.03	J-316	20	526.16	1,558.50	20	66.45	P597	10
J-114	1,001.02	1,560.61	J-114	20	1,066.16	1,560.63	20	62.52	P-57	10
J-932	1,000.93	1,563.01	J-934	20	666.16	1,563.00	20	53.55	P-999	10
J-462	1,001.46	1,563.79	J-714	16.35	737.74	1,563.79	20	30.95	P-537	10
J-926	1,000.93	1,563.93	J-934	20	666.16	1,563.93	20	47.87	P-1001	10

ID	Total Demand (gpm)	Available Flow at Hydrant (gpm); maintains 20 psi in water main adjacent to hydrant	Critical Node ID	Critical Node Pressure (psi) at Available Fire Flow	Critical Node Head (ft)	Design Flow (gpm); Max Flow at hydrant to Maintain Minimum System Pressure at 20 psi	Design Pressure (psi)	Design Fire Node Pressure (psi)	Critical Pipe ID	Critical Pipe Velocity (ft/s)
J-956	1,000.00	1,564.68	J-134	6.37	1,094.69	1,564.68	20	67.89	P-1029	10
J-756	1,000.93	2,599.60	J-714	17.4	740.16	1,564.86	20	47.48	P-779	10
J-94	1,001.02	1,565.70	J-94	20	986.16	1,565.70	20	58.23	P-83	10
J-444	1,000.00	1,565.79	J-446	16.97	649.16	1,565.79	20	42.89	P-521	10
J-448	1,000.93	1,565.79	J-714	19.65	745.35	1,565.79	20	43.28	P-523	10
J-928	1,000.93	1,565.79	J-928	20	656.16	1,565.79	20	48.51	P-1005	10
J354	1,000.00	1,566.71	J356	17.83	746.16	1,566.71	20	34.25	P529	10
J356	1,000.00	1,566.72	J356	20	751.16	1,566.71	20	28.45	P531	10
J44	1,000.00	1,566.71	J42	13.75	871.73	1,566.71	20	55.66	P79	10
J48	1,000.00	1,566.71	J42	19.01	883.88	1,566.71	20	52.5	P83	10
J492	1,000.00	1,566.72	J-714	17.25	739.8	1,566.71	20	32.25	P769	10
J50	1,000.00	1,566.71	J42	16.86	878.91	1,566.71	20	57.4	P85	10
J530	1,000.00	1,566.71	J-714	19.52	745.06	1,566.71	20	26.01	P805	10
J-730	1,000.00	1,566.71	J356	13.5	736.16	1,566.71	20	63.42	P-887	10
J-1062	1,000.00	1,566.72	J-1062	20	686.16	1,566.72	20	34.56	P-1165	10
J-128	1,001.02	1,566.72	J-120	10.93	999.21	1,566.72	20	57.19	P-71	10
J358	1,000.00	1,566.72	J358	20	716.16	1,566.72	20	25.63	P541	10
J360	1,000.00	1,566.72	J364	18.75	741.28	1,566.72	20	27.15	P545	10
J362	1,000.00	1,566.72	J362	20	708.16	1,566.72	20	23.45	P539	10
J364	1,000.00	1,566.72	J364	20	744.16	1,566.72	20	25.61	P543	10
J-446	1,000.93	1,566.72	J-446	20	656.16	1,566.72	20	27.41	P-527	10
J-456	1,001.46	1,566.72	J-456	20	696.16	1,566.72	20	23.29	P-531	10
J46	1,000.00	1,566.71	J42	13.25	870.57	1,566.72	20	57.16	P81	10
J-466	1,001.46	1,566.72	J-714	18.76	743.29	1,566.72	20	27.72	P-541	10
J-472	1,000.93	3,275.13	J-472	20	586.16	1,566.72	20	50.51	P881	10
J-488	1,001.62	1,566.72	J-564	20.43	662.16	1,566.72	20	45.04	P-473	10
J-526	1,001.62	2,467.42	J-526	20	546.16	1,566.72	20	54.04	P-553	10
J546	1,000.00	2,420.52	J546	20	675.16	1,566.72	20	45.97	P839	10
J-550	1,001.62	45,989.48	J-556	1,958.18	5,079.22	1,566.72	20	42.51	P-575	10
J566	1,000.00	1,566.72	J-918	-0.43	829.01	1,566.72	20	70.22	P871	10
J-752	1,000.93	2,336.39	J-752	20	676.16	1,566.72	20	43.58	P-787	10

ATTACHMENT A

ID	Total Demand (gpm)	Available Flow at Hydrant (gpm); maintains 20 psi in water main adjacent to hydrant	Critical Node ID	Critical Node Pressure (psi) at Available Fire Flow	Critical Node Head (ft)	Design Flow (gpm); Max Flow at hydrant to Maintain Minimum System Pressure at 20 psi	Design Pressure (psi)	Design Fire Node Pressure (psi)	Critical Pipe ID	Critical Pipe Velocity (ft/s)
J-754	1,000.93	2,475.98	J-714	18.9	743.61	1,566.72	20	45.77	P-789	10
J-766	1,001.46	1,566.72	J-766	20	696.16	1,566.72	20	21.3	P-793	10
J-790	1,000.93	1,566.72	J-790	20	726.16	1,566.72	20	34.48	P-823	10
J-802	1,001.46	1,566.72	J-802	20	726.16	1,566.72	20	37.43	P-831	10
J-812	1,001.46	1,566.72	J-836	7.47	717.23	1,566.72	20	54.06	P-843	10
J-858	1,000.93	1,566.72	J-858	20	716.16	1,566.72	20	39.26	P-825	10
J-890	1,001.46	1,566.72	J-890	20	726.16	1,566.72	20	32.79	P-985	10
J-934	1,000.93	1,566.72	J-934	20	666.16	1,566.72	20	46.52	P-1003	10
J-920	1,001.46	2,047.50	J-918	11.33	856.16	1,576.06	20	28.74	P-941	4.48
J-854	1,001.46	1,887.00	J-838	-8.84	679.6	1,580.76	20	52.97	P-837	8.39
J-460	1,001.46	1,899.36	J-714	14.51	733.48	1,602.56	20	29.79	P-535	5.44
J-912	1,001.46	2,579.49	J-918	2.67	836.16	1,608.77	20	37.42	P-943	4.57
J-458	1,001.46	1,913.83	J-714	15.23	735.14	1,648.00	20	28.78	P-533	5.84
J-910	1,001.46	2,805.42	J-918	2.67	836.16	1,691.33	20	37.37	P-945	4.81
J-808	1,001.46	1,737.38	J-836	-1.53	696.46	1,737.24	20	52.92	P-839	10
J-814	1,001.46	2,044.44	J-836	4.12	709.52	1,743.54	20	49.02	P-845	8.54
J-718	1,001.46	2,090.40	J-714	14.39	733.21	1,759.68	20	26.15	P-765	8.87
J-908	1,001.46	3,519.26	J-918	-6	816.16	1,770.63	20	46.06	P-947	5.04
J-206	1,001.32	1,784.38	J-206	20	946.16	1,784.45	20	20.07		
J-120	1,000.00	59,972.80	J-120	20.01	1,020.17	1,797.60	20	19.99		
J-126	1,001.02	1,931.72	J-120	9.8	996.62	1,798.62	20	32.89		
J-454	1,001.46	2,265.68	J-714	12.42	728.66	1,817.74	20	35.09	P-529	7.23
J-276	1,001.65	1,819.29	J-276	20	536.16	1,819.29	20	20.1		
J-906	1,001.46	3,517.80	J-918	-6	816.16	1,839.14	20	46.03	P-949	5.24
J-194	1,001.32	2,334.02	J-192	6.96	1,086.06	1,847.18	20	34.68	P-243	5.34
J-202	1,001.32	3,026.30	J-192	-15.01	1,035.37	1,847.18	20	70.21	P-235	5.32
J-952	1,000.00	2,322.78	J-192	7.26	1,086.77	1,851.81	20	46.01		
J-272	1,001.65	877.99	J-272	20	538.16	1,874.38	20	20.14		
J-810	1,001.46	1,882.90	J-836	0.27	700.63	1,882.80	20	52.63	P-841	10
J-720	1,001.46	1,918.96	J-714	13.65	731.5	1,893.80	20	26.95	P-769	9.87
J-758	1,000.93	2,958.48	J-714	12.67	729.25	1,975.01	20	41.4	P-777	10

ATTACHMENT A

ID	Total Demand (gpm)	Available Flow at Hydrant (gpm); maintains 20 psi in water main adjacent to hydrant	Critical Node ID	Critical Node Pressure (psi) at Available Fire Flow	Critical Node Head (ft)	Design Flow (gpm); Max Flow at hydrant to Maintain Minimum System Pressure at 20 psi	Design Pressure (psi)	Design Fire Node Pressure (psi)	Critical Pipe ID	Critical Pipe Velocity (ft/s)
J-402	1,000.93	1,976.87	J-714	35.9	782.86	1,978.11	20	60.15	P-453	10
J-226	1,001.32	2,338.59	J-228	7	986.16	1,991.63	20	33.03		
J-478	1,000.93	1,007,690	J-480	18.63	608	2,011.92	20	23.06		
J84	1,000.00	2,016.65	J-874	19.01	843.87	2,016.65	20	44.17	P155	10
J-508	1,002.25	2,025.29	J-508	20	566.16	2,025.08	20	20.31		
J116	1,000.00	4,561.78	J-918	-14.73	796.01	2,067.42	20	66.44	P-981	5.46
J118	1,000.00	4,700.85	J-918	-6.02	816.1	2,067.42	20	53.95	P211	2.54
J124	1,000.00	4,824.19	J-918	-7.58	812.5	2,067.42	20	56.08	P199	3.03
J476	1,000.00	4,268.93	J-918	-12.68	800.73	2,067.42	20	62.48	P749	5.81
J120	1,000.00	4,421.92	J-918	-2.51	824.2	2,067.43	20	49.55	P205	3.49
J122	1,000.00	4,532.02	J-918	-3.89	821.01	2,067.43	20	54.79	P203	4.33
J-748	1,001.46	4,893.24	J-918	-12.56	801.01	2,068.95	20	60.82	P-983	5.09
J-346	1,001.65	5,972.10	J-346	20	546.16	2,075.99	20	71.12	P-373	10
J-318	1,001.65	2,085.12	J-318	20	526.16	2,085.07	20	20.15		
J-314	1,001.65	2,090.99	J-314	20	526.16	2,090.93	20	20.16		
J-210	1,001.32	3,100.01	J-192	-0.59	1,068.63	2,111.80	20	68.8	P-211	6.74
J-548	1,001.62	2,311.96	J-556	15.6	595.99	2,113.19	20	25.45	P-567	7.92
J-450	1,000.93	2,755.27	J-714	12.07	727.86	2,114.75	20	37.37	P-791	10
J-212	1,001.32	2,564.74	J-192	11.04	1,095.48	2,128.20	20	44.05		
J526	1,000.00	414,853.41	J340	565.22	1,892.46	2,159.32	20	36.56	P785	10
J-510	1,002.25	1,388.60	J-510	20	566.16	2,177.51	20	20.61		
J-536	1,001.62	2,489.48	J-556	19.56	605.15	2,223.23	20	23.95	P-563	6.98
J-96	1,001.02	1,566.72	J-94	17.5	980.39	2,242.06	20	23.46		
J-186	1,001.32	3,485.43	J-192	-36.33	986.16	2,243.61	20	76.68	P-251	6.48
J-518	1,001.62	878.04	J-520	20	546.16	2,264.51	20	20.68		
J-438	1,000.93	1,607.71	J-438	20	646.16	2,264.81	20	20		
J94	1,000.00	2,269.77	J94	20	801.16	2,269.77	20	33.84	P157	10
J-532	1,001.62	2,300.29	J-532	20	576.16	2,286.82	20	20.49	P-561	7.43
J-484	1,001.62	2,796.05	J-556	15.28	595.27	2,302.08	20	25.96	P-469	9.66
J-482	1,001.62	3,252.84	J-564	19.69	660.44	2,308.65	20	46.06	P-467	7.36
J-506	1,002.25	1,268.88	J-506	20	566.16	2,330.37	20	20.94		

ATTACHMENT A

ID	Total Demand (gpm)	Available Flow at Hydrant (gpm); maintains 20 psi in water main adjacent to hydrant	Critical Node ID	Critical Node Pressure (psi) at Available Fire Flow	Critical Node Head (ft)	Design Flow (gpm); Max Flow at hydrant to Maintain Minimum System Pressure at 20 psi	Design Pressure (psi)	Design Fire Node Pressure (psi)	Critical Pipe ID	Critical Pipe Velocity (ft/s)
J386	1,000.00	2,375.35	J-322	19.44	524.87	2,350.06	20	21.35	P595	6.67
J388	1,000.00	4,095.08	J-322	36.55	564.36	2,350.06	20	21.16	P585	5.74
J-36	1,002.25	7,039.38	J-192	15.19	1,105.05	2,354.04	20	73.53	P-177	9.92
J-322	1,001.65	1,566.71	J-322	20	526.16	2,366.17	20	20.76		
J-878	1,001.46	2,417.56	J-878	20	846.16	2,416.12	20	20.01	P-923	9.02
J86	1,000.00	2,426.23	J-874	19.95	846.03	2,426.23	20	39.84	P153	10
J-724	1,000.93	2,763.18	J-714	12.92	729.81	2,428.17	20	27.36		
J-498	1,001.65	2,431.19	J-498	20.04	536.25	2,431.25	20	64.65	P-359	10
J-332	1,001.65	4,631.41	J-332	20	536.16	2,447.99	20	64.23	P-387	10
J-732	1,000.93	2,447.99	J-874	16.96	839.15	2,447.99	20	56.58	P-889	10
J-898	1,001.46	2,447.99	J-898	20	755.16	2,447.99	20	22.84	P-977	10
J92	1,000.00	2,454.91	J92	20	800.16	2,454.91	20	31.2	P145	10
J82	1,000.00	2,494.23	J-874	17.66	840.76	2,494.04	20	42.73	P133	10
J-218	1,001.32	2,062.67	J-228	10.64	994.56	2,532.99	20	36.18		
J-320	1,001.65	243,832.16	J-322	19.95	526.05	2,557.66	20	21.17		
J-762	1,000.93	2,564.48	J-714	14.21	732.79	2,565.16	20	44.86	P-785	10.01
J-726	1,000.93	2,837.07	J-714	16.46	737.98	2,565.91	20	25.81	P-775	8.46
J-366	1,002.25	6,301.21	J-366	20	546.16	2,612.02	20	68.6	P-263	10.01
J-804	1,001.46	3,487.22	J-836	-4.71	689.14	2,618.91	20	44.71	P-833	7.54
J-750	1,000.93	3,170.41	J-714	10.97	725.31	2,634.37	20	32.54	P-781	8.23
J98	1,000.00	2,635.39	J-874	19.33	844.6	2,635.38	20	34.83	P141	10
J-528	1,001.62	158,704.80	J-532	338.03	1,310.13	2,670.42	20	21.09	P-555	9.62
J-180	1,002.25	2,681.17	J-180	20	546.16	2,681.17	20	20.01		
J346	1,000.00	2,708.41	J346	20	627.16	2,708.67	20	23.13	P835	10
J56	1,000.00	66,168.50	J56	19.98	806.12	2,722.19	20	20.37		
J100	1,000.00	2,731.57	J-874	19.59	845.21	2,731.56	20	34.37	P137	10
J90	1,000.00	2,732.90	J90	20	795.16	2,732.88	20	28.58	P147	10
J540	1,000.00	2,736.39	J540	20	634.16	2,733.91	20	20.29		
J-418	1,000.93	2,784.42	J-418	20	636.16	2,782.84	20	20.18		
J-760	1,000.93	3,469.63	J-714	13.49	731.13	2,836.40	20	33.83	P-783	10
J-874	1,001.46	2,861.46	J-874	20	846.16	2,858.78	20	20.01	P-913	7.8

ATTACHMENT A

ID	Total Demand (gpm)	Available Flow at Hydrant (gpm); maintains 20 psi in water main adjacent to hydrant	Critical Node ID	Critical Node Pressure (psi) at Available Fire Flow	Critical Node Head (ft)	Design Flow (gpm); Max Flow at hydrant to Maintain Minimum System Pressure at 20 psi	Design Pressure (psi)	Design Fire Node Pressure (psi)	Critical Pipe ID	Critical Pipe Velocity (ft/s)
J-290	1,001.65	131,154.30	J-290	20.04	531.24	2,865.60	20	19.98		
J96	1,000.00	2,913.96	J-874	19.39	844.76	2,913.94	20	31.81	P139	10
J88	1,000.00	2,977.23	J88	20	787.16	2,977.24	20	27.28	P151	10
J524	1,000.00	2,979.45	J524	20	605.67	2,979.45	20	20.05		
J-516	1,001.62	3,103.44	J-520	16.1	537.15	2,996.83	20	23.87		
J-118	1,001.02	3,013.20	J-118	20	1,046.16	3,013.20	20	20.12		
J348	1,000.00	3,042.88	J348	20	633.16	3,036.27	20	20.08	P507	8.53
J438	1,000.00	1,566.72	J438	19.61	527.27	3,043.21	20	19.97		
J-440	1,000.93	12,493.39	J-440	20	646.16	3,078.28	20	20.22		
J-82	1,001.02	3,082.69	J-82	20	1,026.16	3,082.81	20	20	P-93	9.95
J-378	1,002.25	4,306.02	J-378	20	561.16	3,083.55	20	44.86	P-285	10
J-80	1,001.02	544.07	J-82	7.2	996.62	3,097.29	20	33.71	P-95	9.99
J-84	1,001.02	3,140.59	J-84	20	1,056.16	3,097.52	20	21.13	P-91	10
J-146	1,001.32	6,301.53	J-192	-39.57	978.67	3,099.34	20	79.4	P-33	7.75
J-86	1,001.02	3,102.27	J-134	17.97	1,121.46	3,100.71	20	30.82	P-89	10.01
J-78	1,001.02	4,246.59	J-82	-14.51	946.51	3,102.47	20	61.52	P-97	10
J-144	1,001.32	5,972.00	J-192	-30.7	999.14	3,132.40	20	71.6	P-37	4.72
J-12	1,002.25	3,200.42	J-12	20	556.16	3,200.42	20	19.97		
J460	1,000.00	49,586.07	J460	20	527.2	3,246.01	20	19.97	P721	9.21
J336	1,000.00	3,322.20	J-420	19.31	634.57	3,250.29	20	20.96	P511	7.39
J-504	1,002.25	3,258.61	J-504	20	566.16	3,258.61	20	19.95		
J-876	1,001.46	3,269.61	J-876	20	846.16	3,269.13	20	20.87	P-935	10
J64	1,000.00	96,480.27	J56	56.63	890.7	3,282.69	20	51.06		
J-792	1,000.93	3,319.11	J-836	19.62	745.29	3,319.19	20	33.19	P-819	10.09
J-866	1,001.46	4,315.50	J-874	13.13	830.29	3,339.70	20	32.72	P-911	7.32
J-992	1,000.00	24,919.66	J-992	20	622.74	3,377.45	20	20		
J-502	1,002.25	2,487.70	J-502	20	566.16	3,380.20	20	19.95		
J584	1,000.00	3,384.50	J584	20	613.16	3,384.50	20	20.01		
J-92	1,001.02	4,957.26	J-134	-0.18	1,079.57	3,387.88	20	47.14		
J-98	1,001.02	5,069.53	J-134	-15.11	1,045.13	3,389.59	20	62.33	P-45	7.2
J458	1,000.00	3,343.22	J458	20	527.24	3,397.66	20	19.97	P697	9.64

ATTACHMENT A

ID	Total Demand (gpm)	Available Flow at Hydrant (gpm); maintains 20 psi in water main adjacent to hydrant	Critical Node ID	Critical Node Pressure (psi) at Available Fire Flow	Critical Node Head (ft)	Design Flow (gpm); Max Flow at hydrant to Maintain Minimum System Pressure at 20 psi	Design Pressure (psi)	Design Fire Node Pressure (psi)	Critical Pipe ID	Critical Pipe Velocity (ft/s)
J-864	1,001.46	4,379.63	J-874	13.97	832.23	3,400.46	20	31.93	P-909	7.22
J446	1,000.00	3,463.03	J446	20	526.16	3,463.03	20	19.97		
J556	1,000.00	3,497.03	J-294	19.33	539.62	3,478.15	20	20.69	P853	9.98
J-796	1,001.46	3,481.49	J-836	11.32	726.13	3,481.31	20	35.07	P-821	10
J-474	1,000.93	3,481.78	J-474	20	597.16	3,481.78	20	19.96		
J-798	1,001.46	3,482.93	J-836	11.32	726.13	3,482.90	20	34.03	P-827	10
J-800	1,001.46	3,484.32	J-836	11.32	726.13	3,484.32	20	33.29	P-829	10
J66	1,000.00	130,370.19	J56	59,858.57	138,905.80	3,500.31	20	53.53		
J-512	1,002.25	3,527.32	J-512	20	566.16	3,527.33	20	19.95		
J580	1,000.00	3,535.57	J580	20	609.16	3,535.57	20	20		
J436	1,000.00	3,538.87	J436	20	529.16	3,538.87	20	19.97		
J432	1,000.00	3,556.31	J432	20	530.16	3,556.31	20	19.97		
J-130	1,001.02	7,051.12	J-102	17.33	1,120.00	3,562.55	20	39.93	P-75	10.03
J578	1,000.00	3,579.72	J578	20	602.51	3,579.71	20	19.96		
J-944	1,000.00	3,812.97	J546	13.93	661.16	3,586.99	20	25.89		
J434	1,000.00	3,589.88	J434	20	530.16	3,589.88	20	19.97		
J-64	1,001.02	3,612.76	J-64	20	776.16	3,612.69	20	20.21		
J-66	1,001.02	3,525.11	J-64	14.93	764.46	3,612.70	20	26.46		
J-784	1,000.93	3,691.68	J-784	20	706.16	3,691.61	20	29.09	P-813	10.04
J454	1,000.00	3,692.89	J454	20	530.16	3,692.89	20	19.97		
J-20	1,002.25	3,700.13	J-20	20	556.16	3,702.09	20	19.94	P-415	9.95
J-288	1,001.65	3,708.71	J-288	20	533.16	3,708.71	20	19.97		
J-62	1,001.02	4,038.06	J-64	16.01	766.94	3,743.92	20	25.86		
J-782	1,000.93	4,271.67	J-782	20	706.16	3,748.35	20	26.94	P-811	10.03
J-764	1,000.93	4,053.58	J-714	16.59	738.3	3,783.99	20	26.39	P-785	8.54
J464	1,000.00	3,815.44	J464	20	529.91	3,815.44	20	19.97		
J-68	1,001.02	3,829.92	J-64	19.95	776.04	3,826.64	20	20.27		
J-780	1,000.93	3,854.20	J-780	20	706.16	3,854.15	20	22.83	P-809	10.01
J-768	1,000.93	4,089.68	J-714	17.49	740.36	3,879.82	20	24.91	P-797	8.37
J424	1,000.00	3,894.00	J424	20	530.16	3,894.01	20	19.97		
J-734	1,000.93	4,459.73	J-874	16.58	838.26	3,897.52	20	36.78	P-903	8.48

ID	Total Demand (gpm)	Available Flow at Hydrant (gpm); maintains 20 psi in water main adjacent to hydrant	Critical Node ID	Critical Node Pressure (psi) at Available Fire Flow	Critical Node Head (ft)	Design Flow (gpm); Max Flow at hydrant to Maintain Minimum System Pressure at 20 psi	Design Pressure (psi)	Design Fire Node Pressure (psi)	Critical Pipe ID	Critical Pipe Velocity (ft/s)
J-778	1,000.93	3,876.20	J-778	20	706.16	3,912.21	20	19.43	P-807	9.86
J-774	1,000.93	3,892.24	J-774	20	696.16	3,920.16	20	19.49	P-803	9.28
J-382	1,002.25	3,920.22	J-382	20	566.16	3,920.22	20	19.96		
J-736	1,000.93	4,504.63	J-874	16.95	839.12	3,936.03	20	35.6	P-891	8.47
J-410	1,000.93	3,956.69	J-410	20	584.16	3,987.24	20	19.93		
J-770	1,000.93	3,964.21	J-770	20	686.16	3,987.32	20	19.53	P-799	8.92
J-352	1,001.65	1,376.23	J-352	20	546.16	4,013.54	20	19.96		
J-776	1,000.93	4,004.13	J-778	19.63	705.3	4,016.94	20	19.77	P-805	9.85
J-176	1,001.32	4,570.03	J-64	10.04	753.17	4,025.20	20	40.58		
J-58	1,001.32	4,455.62	J-64	12.22	758.21	4,025.20	20	35.62		
J-60	1,001.32	4,455.95	J-64	12.22	758.2	4,025.20	20	34.62		
J406	1,000.00	19,103.52	J406	20	536.16	4,030.06	20	19.97		
J-738	1,000.93	4,607.84	J-874	17.73	840.91	4,030.92	20	32.78	P-893	8.47
J78	1,000.00	4,328.88	J-134	1.88	1,084.34	4,044.32	20	52.78	P-99	9.3
J-106	1,001.02	-187,900.98	J-102	-7,472.95	-16,166.59	4,065.72	20	40.34	P-53	10.02
J-70	1,001.02	5,158.40	J-134	7.92	1,098.29	4,075.44	20	33.63		
J-72	1,001.02	5,552.99	J-134	3.59	1,088.28	4,075.44	20	48.12		
J-74	1,001.02	3,524.09	J-134	3.08	1,087.10	4,075.44	20	55.01		
J-280	1,001.65	4,989.92	J-280	20	536.16	4,119.70	20	39.44	P-329	10
J-1064	1,000.00	8,615.65	J-192	-12.03	1,042.23	4,141.32	20	72.86	P-1167	10.02
J-740	1,000.93	4,597.01	J-874	18.48	842.65	4,149.24	20	29.44	P-897	8.49
J70	1,000.00	86,352.85	J56	43,937.35	102,161.68	4,166.08	20	35.13		
J-742	1,000.93	4,553.50	J-874	19.07	844.02	4,266.11	20	26.28	P-899	8.97
J72	1,000.00	4,623.96	J-134	16.42	1,117.89	4,285.69	20	29.44		
J-886	1,001.46	4,320.49	J-886	20	746.16	4,288.44	20	20.17	P-961	9.1
J-888	1,001.46	4,351.92	J-888	20	746.16	4,331.54	20	20.11	P-965	9.48
J468	1,000.00	4,356.77	J468	20	530.44	4,356.77	20	19.98		
J-304	1,001.65	4,370.56	J-304	20	536.16	4,371.59	20	19.97	P-355	7.84
J-892	1,001.46	4,392.02	J-892	20	746.16	4,380.16	20	20.06	P865	9.9
J-302	1,001.65	4,501.51	J-304	17.36	530.07	4,406.91	20	22.68	P-353	6.51
J-300	1,001.65	4,510.00	J-304	17.9	531.3	4,434.18	20	22.14	P-349	7.28

ATTACHMENT A

ID	Total Demand (gpm)	Available Flow at Hydrant (gpm); maintains 20 psi in water main adjacent to hydrant	Critical Node ID	Critical Node Pressure (psi) at Available Fire Flow	Critical Node Head (ft)	Design Flow (gpm); Max Flow at hydrant to Maintain Minimum System Pressure at 20 psi	Design Pressure (psi)	Design Fire Node Pressure (psi)	Critical Pipe ID	Critical Pipe Velocity (ft/s)
J-44	1,001.32	6,186.91	J-238	-5.73	736.79	4,438.30	20	49.83		
J-370	1,002.25	4,450.41	J-370	20	546.16	4,450.41	20	19.96		
J-428	1,000.93	28,144.89	J-714	35.95	782.97	4,450.68	20	29.19	P-503	10.02
J-108	1,001.02	1,565.70	J-102	19.73	1,125.53	4,489.90	20	20.49		
J-296	1,001.65	4,491.40	J-304	20	536.16	4,491.40	20	19.97		
J-894	1,001.46	4,572.64	J-836	11.43	726.39	4,571.83	20	32.69	P-1057	9.97
J-380	1,002.25	4,812.75	J-382	15.67	556.16	4,609.88	20	24.3		
J-786	1,000.93	4,725.71	J-858	20	716.16	4,725.71	20	20.01		
J-896	1,001.46	3,942.44	J-898	11.77	736.16	4,757.39	20	28.35		
J-424	1,000.93	5,477.25	J-714	16.95	739.12	4,798.97	20	28.89		
J-368	1,002.25	2,376.89	J-368	20	546.16	4,822.49	20	19.96		
J376	1,000.00	4,903.82	J376	20	546.16	4,903.83	20	19.97		
J-414	1,000.93	5,001.74	J-414	20	586.16	5,000.12	20	19.71		
J-406	1,000.93	32,099.83	J-406	20	576.16	5,020.90	20	19.36		
J-412	1,000.93	5,000.71	J-714	14.72	733.96	5,060.62	20	36.4		
J76	1,000.00	5,065.54	J-82	-5.97	966.23	5,064.70	20	20.14		
J-348	1,001.65	5,093.00	J-348	20	546.16	5,093.00	20	19.97		
J-1066	1,000.00	8,819.01	J-192	-6.55	1,054.88	5,096.13	20	58.82		
J-310	1,001.65	96,166.50	J-310	20	536.15	5,238.60	20	19.98		
J-408	1,000.93	6,475.46	J-714	14.43	733.31	5,243.72	20	38.33		
J-26	1,002.25	5,347.31	J-26	20	546.16	5,348.23	20	20.98		
J-284	1,001.65	5,372.50	J-284	20	536.16	5,372.50	20	19.98		
J-268	1,001.65	5,394.96	J-268	20	546.16	5,394.96	20	19.97		
J-396	1,000.93	7,188.70	J-714	14.14	732.62	5,661.57	20	40.14		
J-328	1,001.65	5,695.50	J-332	20	536.16	5,695.51	20	19.97		
J-390	1,002.25	5,819.63	J-390	20	556.16	5,820.47	20	20.84		
J-394	1,000.93	46,067.45	J-714	35.48	781.89	5,992.12	20	36.59		
J-358	1,002.25	6,017.15	J-358	20	546.16	6,017.15	20	19.97		
J-384	1,002.25	5,995.02	J-384	20	556.16	6,213.39	20	19.66		
J-354	1,002.25	7,546.58	J-564	20	661.16	6,486.97	20	30.4	P-369	10
J372	1,000.00	6,581.91	J372	20	546.16	6,583.52	20	20.58		

ATTACHMENT A

ID	Total Demand (gpm)	Available Flow at Hydrant (gpm); maintains 20 psi in water main adjacent to hydrant	Critical Node ID	Critical Node Pressure (psi) at Available Fire Flow	Critical Node Head (ft)	Design Flow (gpm); Max Flow at hydrant to Maintain Minimum System Pressure at 20 psi	Design Pressure (psi)	Design Fire Node Pressure (psi)	Critical Pipe ID	Critical Pipe Velocity (ft/s)
J-32	1,002.25	7,042.26	J-192	1.87	1,074.32	6,772.35	20	48.88	P-149	9.71
J-30	1,002.25	9,463.91	J-192	-31.29	997.79	6,923.36	20	46.1		
J-340	1,002.25	42,619.65	J-564	19.82	660.73	7,037.96	20	20.29	P-377	8.56
J-338	1,002.25	6,952.48	J-338	20	546.16	7,043.02	20	18.5		
J-344	1,002.25	7,920.83	J-344	20.15	546.51	7,138.92	20	18.23	P-377	9.28
J-264	1,002.25	768,098	J-264	21.25	549.03	7,424.57	20	19.91		
J-262	1,002.25	5,506.46	J-714	19.76	745.61	7,486.76	20	21.07		

ATTACHMENT A

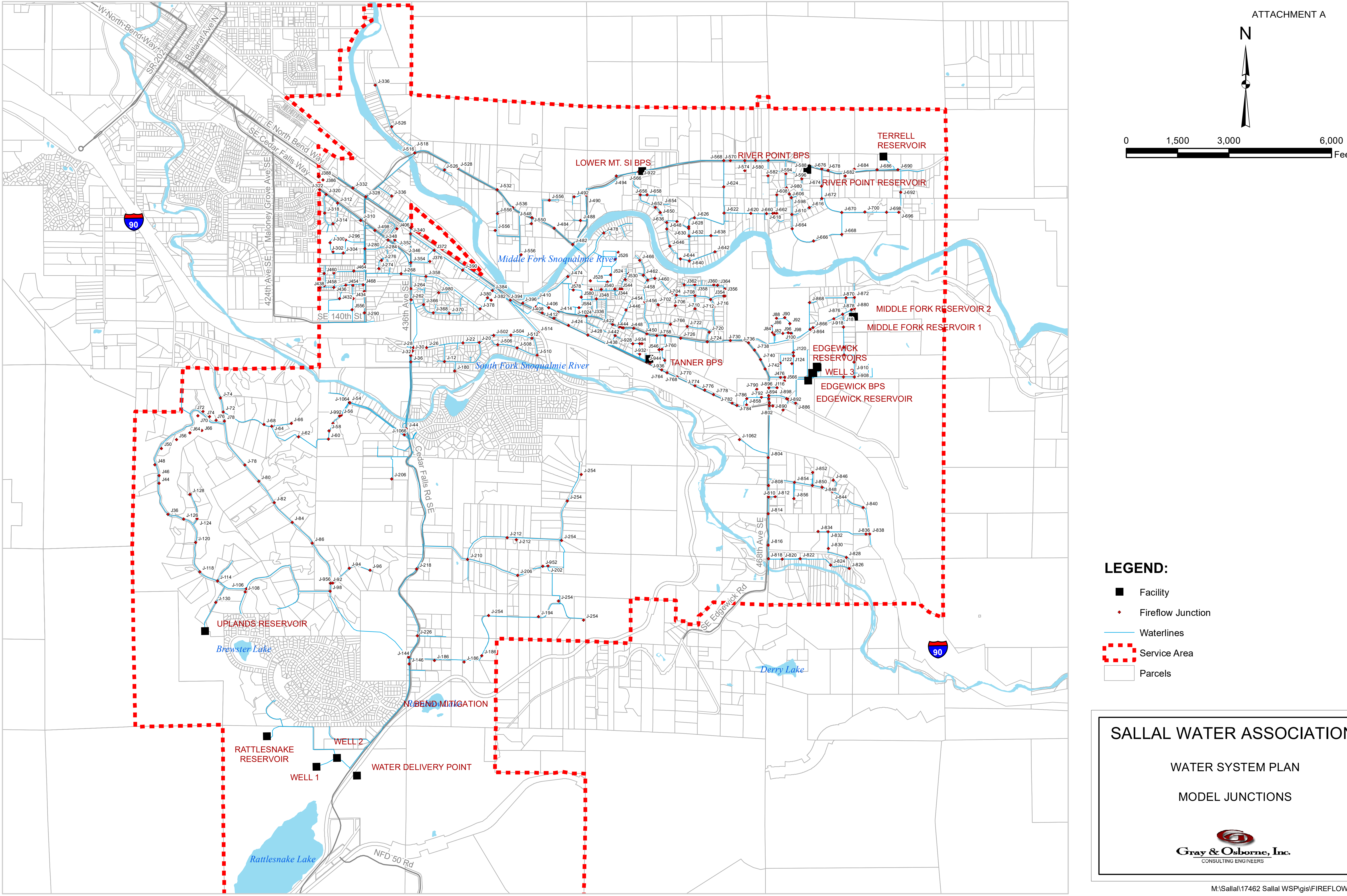

LEGEND:

- ■ Facility
- ◆ Fireflow Junction
- — Waterlines
- ▭ Service Area
- ☐ Parcels

SALLAL WATER ASSOCIATION

WATER SYSTEM PLAN

MODEL JUNCTIONS

Gray & Osborne, Inc.
CONSULTING ENGINEERS

M:\Sallal\17462 Sallal WSP\gis\FIREFLOW - CIP.mxd

APPENDIX I

WELLHEAD PROTECTION PLAN

Dear Sallal Water Association Member:

The Federal Safe Drinking Water Act, administered by the Washington Department of Health, requires drinking water purveyors to develop wellhead protection plan as part of a program to help protect drinking water supplies from potential contamination. We are writing to you to provide notice that the wellhead protection plan developed by the Sallal Water Association identifies your property as being within a wellhead protection area.

The Sallal Water Association obtains our water from groundwater wells, with the primary well sources located between Rattlesnake Lake and Wilderness Rim. A secondary well source is located east of North Bend on Sallal's property on SE 144th St. Groundwater used for drinking water supplies is often vulnerable to contamination by hazardous substances that might get released to the ground within the well's "capture zone". A capture zone is the area around the well from which groundwater pumped by the well may enter the well within a period of 10-years. The Wellhead Protection Plan includes a public education and notification program to property owners in proximity to our Wellhead Protection Area. We believe it is important for our owners within the Wellhead Protection Area to understand how their waste disposal practices could potentially jeopardize our drinking water sources.

The Sallal Water Association is fortunate to have it sources located in relatively remote areas. While the potential for contamination is relatively low, each well is of critical importance to meeting Sallal's water demands. Those demands continue to grow as development continues in the system. Loss of a well due to contamination could require expensive treatment systems, relocation of the well or at worst the inability to meet demand.

Sallal used a hydrogeologic study to identify the capture zones in which water or hazardous substances entering the ground could end up in one of our wells. The capture zones are identified in Sallal's Water System Plan.

Many common activities could jeopardize the groundwater that we all depend upon for everyday drinking and bathing. If you notice any of the issues below, please take action:

- Leaking fuel tanks, including home oil tanks.
    - If you notice an increased usage of fuel oil please have your tank inspected for leaks
- Inappropriate disposal of household chemicals, including paints and solvents.
    - Please be vigilant to dispose of all wastes properly.
- Over fertilization of lawns and gardens.
    - Over fertilization or use of pesticides can degrade the groundwater quality through the build-up of nitrates and or pesticides in the water.
- Failed septic systems.
    - Signs of a failing septic system may include slow draining toilets and sinks, gurgling noises within the plumbing, sewage odors inside or outside or continuing drainage.

  - Failed septic systems can lead to bacterial contamination of wells and or a build-up of nitrates in the water.

Ways to Protect and Conserve Groundwater

1. **Go Native**
   Use native plants in your landscape. They look great, and don't need much water or fertilizer. Also choose grass varieties for your lawn that are adapted for our region's climate. This reduces the need for extensive watering or chemical applications.

2. **Reduce Chemical Use**
   Use fewer chemicals around your home and yard, and make sure to dispose of them properly - don't dump them on the ground!

3. **Manage Waste**
   Properly dispose of potentially toxic substances like unused chemicals, pharmaceuticals, paint, motor oil, and other substances. Many communities hold household hazardous waste collections or sites. For more information about properly managing household hazardous waste or to get a schedule for upcoming mobile drop-off locations, please contact King County's Solid Waste Program at (206) 292-4962, or visit their website: https://www.kingcounty.gov/depts/dnrp/solid-waste/facilities/hazardous-waste.aspx.

4. **Don't Let It Run**
   Shut off the water when you brush your teeth or shaving, and don't let it run while waiting for it to get cold. Keep a pitcher of cold water in the fridge instead.

5. **Fix the Drip**
   Check all the faucets, fixtures, toilets, and taps in your home for leaks and fix them right away or install water conserving models.

6. **Water Wisely**
   Water the lawn and plants during the coolest parts of the day and only when they truly need it. Make sure you, your family, and your neighbors obey any watering restrictions during dry periods.

7. **Cleaning Chemicals**
   Be careful with cleaning solutions. These cleaners may contain chemicals like bleach that can kill the beneficial bacteria in your septic system.

8. **Septic Systems**
   Be sure your septic system is working properly. Failing septic systems are a source of nitrates into the groundwater. If you are on a septic system and your drains work slowly or you notice sewer odors, that may be a sign of a failed septic system. Please visit Public Health – Seattle & King County's Environmental Health Services website for more information and resources about septic systems:

https://www.kingcounty.gov/depts/health/environmental-health/piping/onsite-sewage-systems/brochures.aspx.

9. **Fats, Oils & Grease**
   Avoid pouring liquid fats, oil or grease down the drain. These items can clog your septic system and increase solids loading to it.

10. **Septic Tank Maintenance!**
    Have your septic tank pumped out and inspected every 3 to 5 years.

11. **Fuel Storage Tank**
    Have your fuel tank tested. If you notice that the amount of heating oil your home uses has increased it may be a sign of a leak. Please have your tank and fuel supply system inspected. Leaking fuel tanks is a common source of groundwater contamination.

ATTACHMENT A

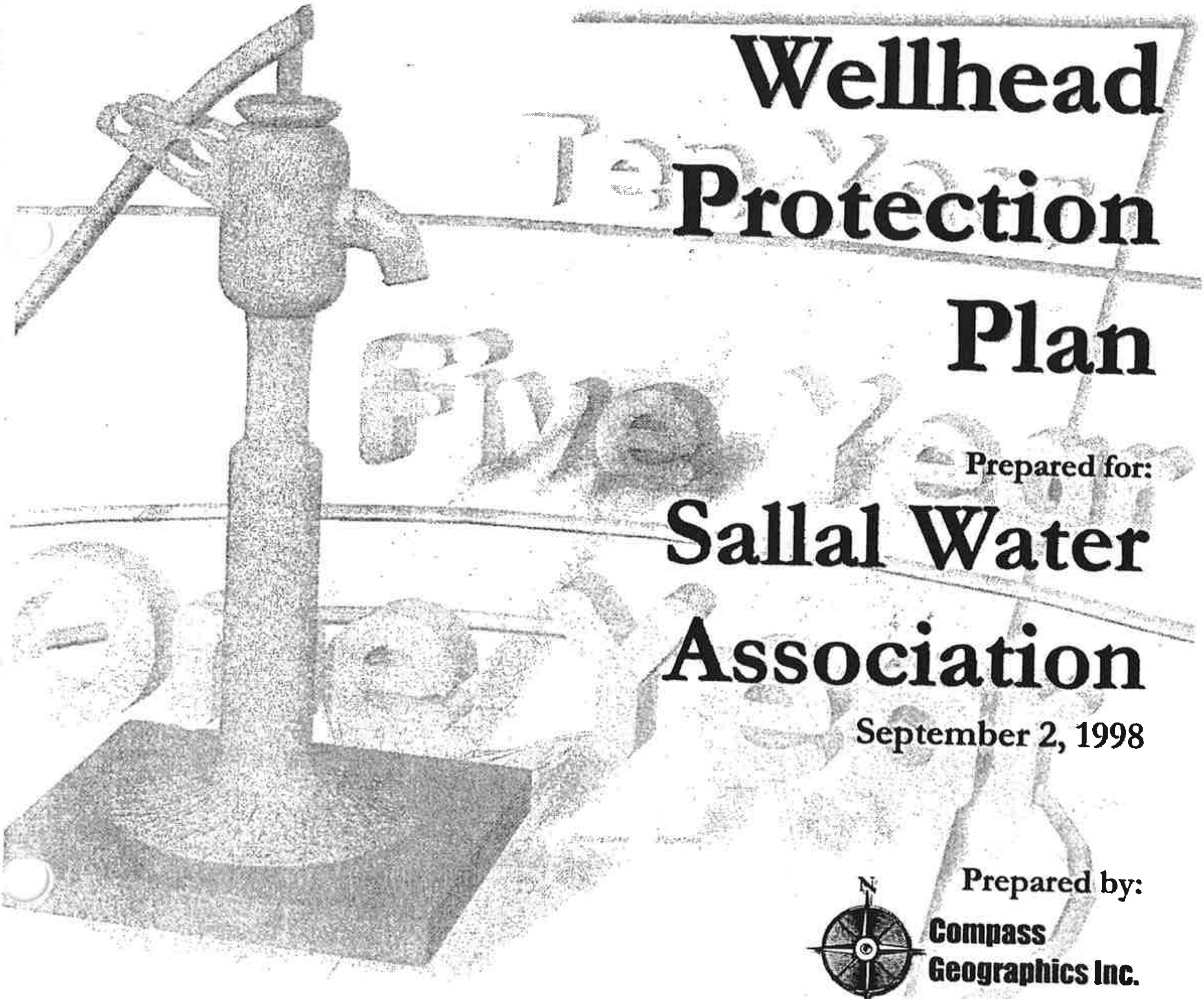

Wellhead Protection Plan

Prepared for:

Sallal Water Association

September 2, 1998

Prepared by:

Compass Geographics Inc.

ATTACHMENT A

Table of Contents

List of Tables

List of Figures

List of Appendices

ATTACHMENT A

1 INTRODUCTION

1.1 Background

In recent years, groundwater resources have been increasingly recognized as a finite natural resource. Although groundwater is a renewable resource, unlike minerals that may be extracted from the earth, it is not immune to damage or abuse that may render a particular groundwater source unusable. Overpumping, generalized pollution, and spills of toxic chemicals may all result in temporary or permanent damage to a given aquifer.

Many communities rely on groundwater as a primary or sole source of potable water. Recognizing the importance of preserving this essential public resource, Congress mandated in the 1986 Amendments to the federal Safe Drinking Water Act that each state must develop a wellhead protection program. In Washington State this program is administered through the State Department of Health (DOH).

In July, 1994 the Washington Administrative Code Section 246-290-100 was modified to include mandatory wellhead protection measures for all public water systems meeting the Federal definition. DOH refers to these systems as "Group A" systems. As part of the wellhead protection measures, administrators of Group A systems are required to develop a specific Wellhead Protection Program for wells and well fields within their jurisdiction. The Plan presented in this document is submitted in partial compliance with this requirement, and is part of the overall Wellhead Protection Program for the Sallal Water Association

1.2 Objective and Scope

Although the obvious objective of this document is to fulfill the requirements of the Federal and state mandates, other, equally important objectives in devising a comprehensive Wellhead Protection Program are manifold. Continued residential and commercial growth in the North Bend area brings with it the challenge of increased demands for potable water and the increased risk that surface or subsurface activities may have a detrimental impact on groundwater resources. The ultimate goal of the Wellhead Protection Program is to protect potable groundwater supplies through groundwater resource delineation, potential groundwater contaminant identification and management strategies aimed at pollution prevention. Wellhead protection programs must apply best management practices (BMPs) and provide public (customer) education to users working or living within the Wellhead Protection Areas (WHPA).

Wellhead Protection Programs were intended and are required to be ongoing programs that are incorporated into the management and administration of the individual water systems and that are subject to periodic review and revision to meet changing conditions. Preparation of a Wellhead Protection Program focuses much-needed attention on the relative susceptibility of groundwater to surface activities and the responsibility of the region's residents to act as good stewards in protecting the resource from potential damage.

The objective of this report is to establish a Wellhead Protection Program and Plan for the Sallal Water Association. The Sallal Wellhead Protection Plan (WHPP) has been designed to accomplish the following objectives:

- Develop specific recommendations to promote long-term management of the groundwater quality;
- Reduce the likelihood that potential contaminant sources will pollute the Sallal Water Association's production wells;
- Evaluate contingency plans to provide alternative sources of drinking water in the event that despite protective measures contamination does occur in one of the Association's wells;
- Meet the requirements of WAC 246-290 and the provisions of the Washington State Department of Health *Wellhead Protection Program Guidance Document* (April 1995)

The scope of the wellhead protection program combines several activities, including compilation of existing documents, delineation of a wellhead protection area, an inventory of surface or subsurface activities within the area that might adversely affect groundwater quality, public notification activities, and coordination with other agencies that share jurisdictional controls that could affect groundwater quality. The complete scope of this program is provided in Table 1.1. Several of these elements are incorporated into this Wellhead Protection Plan document. The plan overview is provided in the following section.

Table 1.1 Required Elements of a Wellhead Protection Program

1. A completed Susceptibility Assessment;
2. A delineated Wellhead Protection Area for each well, wellfield or spring, showing 1, 5, and 10 year time of travel zones plotted on a map and a discussion of the method used to produce the delineation;
3. An inventory within the Wellhead Protection Area of all actual and potential sources of contamination that may pose a threat to the water bearing zone (aquifer) utilized by the well, spring, or wellfield (this list should be updated every two years);
4. Documentation of water purveyors notification to all owners/operators of actual and potential sources of groundwater contamination within the Wellhead Protection Area(s);
5. Documentation that delineation and inventory findings are distributed to the required regulatory and emergency response agencies;
6. Contingency plans for providing alternative sources of drinking water in the event that contamination results in temporary or permanent loss of the principal source of supply;
7. Coordination with local emergency responders (fire, police, and health departments) for appropriate spill/incident response measures;
8. Promotion of active involvement of the customers and stakeholders in the water system through public outreach and educational activities.

1.3 Plan Overview

As stated above, the Wellhead Protection Program encompasses all of the required activities to fulfill the requirements of the Washington Administrative Code (WAC) 246-290 pertaining to Group A public water systems. This document, the Wellhead Protection Plan, provides information pertaining to the physical properties of the aquifer within the Wellhead Protection Area (WHPA), the potential hazards to groundwater within the WHPA, documentation of the public notification process required as part of the Wellhead Protection Program, and a summary of the management and planning issues pertaining to continued groundwater use and contingency needs.

The document sections include:

1. Introduction: The section you are now reading.

2. Water System Geographic Setting, and System Parameters: A description of the water system's geographic setting and system specific information (number of customers, usage rates, etc.)

3. Hydrogeologic Setting: A discussion of the regional geology and hydrogeology, groundwater capture and migration, and an review of the groundwater susceptibility ranking and its derivation.

4. Delineation of the WHPA: A discussion of the methodology used to model groundwater flow within and adjacent to the WHPA, rationale for the selection of the chosen model, modeling approach and results, and definition of the six-month, one, five, and ten year capture zones.

5. Potential Contaminant Source Inventory: A discussion of the methods and resources used to compile a list of potential and actual contaminant sources within the WHPA; the method(s) used to field check this data; a description of the public and agency notification activities that were accomplished incidental to this inventory; and a description of the coordination activities initiated with emergency responders to minimize the impact of spills or releases of hazardous materials that may occur within the WHPA.

6. Management Strategy: A discussion of the ongoing management issues and goals to maintain groundwater quality, particularly with regard to commercial activities and residential or rural activities, with an emphasis on mitigating the potential effects of septic systems on the groundwater resource.

7. Contingency Planning: A discussion of alternative water sources that might be used if the primary system failed or became non-potable, and a discussion of the containment measures that will be implemented if a significant release of hazardous materials occurs within the WHPA.

ATTACHMENT A

2 GEOGRAPHIC SETTING AND SYSTEM INFORMATION

2.1 Water System Location and Geography

The Sallal Water Association is situated in East King County, about two miles east of the City of North Bend. The area is known as the Tanner-Sallal Plain and is generally south of Mt. Si and northwest of the City of Seattle's Cedar River Watershed. The area is bounded to the west by North Bend, to the south by the Cedar River Watershed, to the east by the Snoqualmie National Forest, and to the north by Mt. Si. A location map is provided as Figure 2-1. Figure 2-2 provides a detailed map of the Association's Service Area.

The Association encompasses approximately 44 square miles, and encompasses all of T.23 N, R. 9 E, and the eastern half of T. 23 N, R. 8 E, Willamette Meridian. Two smaller water associations, the Riverbend Homesites Association and the Wilderness Rim Maintenance Corporation, are enclosed within the Sallal Association boundaries. These associations are located within S. 23, T.23 N, R. 8 E, and S. 27, T.23 N, R. 8 E, respectively.

Several major thoroughfares transect the Association area. The major route through the Association is Interstate Highway 90, which traverses the central part of the Association from east to west. Other major routes include old U.S. Route 10 (North Bend Way) which parallels I-90 on the north, and the Cedar River road which intersects I-90 near the Association's western boundary.

The Sallal Water Association is situated primarily within the Snoqualmie River Valley, where it emerges from the Cascade Range and enters the Puget Sound lowlands. Topography of the area rises from the low-relief floodplain of the Snoqualmie River, locally named the Tanner-Sallal Plain, southward to the base of Rattlesnake Mountain, northward to the base of Mt. Si, and eastward to higher elevations of the Upper Snoqualmie Valley. Elevations within the Association range from 1217 feet at the Rattlesnake tank, along the southern boundary, to 480 feet near the center of the region.

The South and Middle Forks of the Snoqualmie River flow through the Association, entering from the east and leaving the Association service to the west. Smaller tributary streams to these rivers are also present.

Land use within the service area is primarily rural residential, with some commercial development. A large truck stop is located at the Edgewick freeway interchange, a golf course and a sanitary landfill / transfer station are located near the western Association boundary. South of the South Fork of the Snoqualmie River, and excluding the Riverbend community, home sites are typically of several acres in size. A few small horse ranches and other "hobby farms" are also located in this area. Farther south, the Association borders on the City of Seattle's Cedar River Watershed. Seattle City Light also operates the Cedar River power generating facilities at the Cedar River town site, southeast of

Rattlesnake Lake. Rattlesnake Lake is the site of a day-use park managed by the City of Seattle.

North of the South Fork of the Snoqualmie River, the area is more developed, with smaller homesites and a higher population density. A few small commercial enterprises are situated within this part of the Association service area, typically small engine and auto repair shops, etc.

2.2 Water System Information

The Sallal Water Association supplies potable water to approximately 1,200 members (connections) serving approximately 3500 people throughout the service area, including wholesale customers. These wholesale customers include the Wilderness Rim Association and two recreational vehicle parks. The system currently supplies approximately 17,000 gallons per day from three wells. Pertinent details for each of the Association's wells are provided in Table 2-1.

The Sallal Water Association was created to meet the needs of individual homeowners in the area whose shallow wells dried up or decreased in production during the summer months. The Sallal Water Association was incorporated in early 1969 and construction began in the summer to intertie with the City of Seattle water source. In 1969, a loan was obtained from the U. S. Department of Agriculture through the Farmers Home Administration.

The water from the City of Seattle's Chester Morse Reservoir system was finally delivered in spring of 1970. In 1983 and 1985, two deep wells were drilled inside the Seattle Watershed boundary under an agreement with the City of Seattle and were put into service on the Sallal system. During 1996, the Sallal Water System converted from surface water sources from within the City of Seattle watershed to groundwater sources. In 1987, a third well was drilled near the Edgewick Interchange to meet the demands in this portion of the Association's service area.

A water cooperative is governed by the needs of its members and administered by a seven member Board of Directors of whom two or three are elected each year. The Association is a non-profit cooperative formed under the laws of the State of Washington and, as such, its by-laws and regulations are approved by its membership. Maintenance and day-to-day operation of the cooperative are provided on a contractual basis with certified water works operators and their staff. Engineering and consulting services are also provided on a contractual basis by a licensed professional engineer and other professionals.

The Association coordinates closely with neighboring water purveyors to establish interties for use in case of emergency. Agreements exist for mutual delivery of water with the Riverbend Homesites Association and the City of North Bend. The Sallal also supplies wholesale water to the Wilderness Rim Association for distribution throughout that community.

2.3 Production Wells

Water for the area derives from three wells. One well is located near the Edgewick Road interchange, north of Interstate 90. Two wells are located on the northwestern flank of Rattlesnake Ridge. A supplementary test well has recently (1996) been drilled and tested adjacent to the Edgewick well but is currently not used as a production well for the water system. The location of the three production wells is shown in Figure 2-2. Pertinent details for each of the Association's wells are provided in Table 2-1 and photographs of the well house and vicinity for each well are provided in Figure 2-3 through Figure 2-4. Well logs for each of the Sallal Production wells are provided in Appendix A.

A limited sanitary survey was conducted of each well location with Mr. Renny Lillejord, the general manager of the Sallal Water Association. A visual inspection of each well was undertaken to determine the susceptibility of the systems wells to contamination due to poor well construction and/or possible vandalism. The survey consisted of an evaluation of general pump house conditions, visible well construction deficiencies, the presence of properly functioning flow meters and security of the wellhouse from unauthorized access. A brief discussion of each of the three production wells currently used by the Association is described below.

Well # 1 and Well # 2

Well #1 and #2 are located by Rattlesnake Lake within the City of Seattle Watershed. The City of Seattle is the actual owner of the wells with the Sallal Water Association leasing the wells under a long-term agreement. The wells are approximately 300 feet apart. These wells are the main source of groundwater for the Sallal Water System. Well #1 (originally labeled TW-1) was drilled in 1983, is 348 feet deep, and is completed with 8- and 12-inch casings. Well #2 (originally labeled PW-1) was completed in 1985 is 163 feet deep and is completed with 10-inch casing. Well #1 is completed with a 100-hp line-shaft pump that produces approximately 1000gpm at normal capacity. Well #2 is also equipped with a 100-hp pump and produces approximately 800 gpm at normal capacity. Well #1 may require additional maintenance or replacement at a future date due to original construction difficulties. As shown on Figure 2-3 both wells are housed in well built individual well houses that are maintained in a locked and secure manner. The interiors of both wellhouses were relatively clean and free of any potential contaminant materials.

Well #3 Edgewick Well

Well # 3 is often referred to as the Edgewick well and is located near Edgewick interchange on Interstate 90, in the east-central part of the Association's service area. The well site is located in an area of some commercial and industrial operations along the I-90 corridor. Well # 3 was drilled and constructed in 1987; the well is 255 feet deep and was completed with 8-inch diameter casing. The well is equipped with a 15-hp pump and produces approximately 76 gpm under normal capacity. The well is housed in a secure, clean well house as shown on

Figure 2-4. No problems were noted during the visual inspection of the wellhouse and vicinity.

ATTACHMENT A

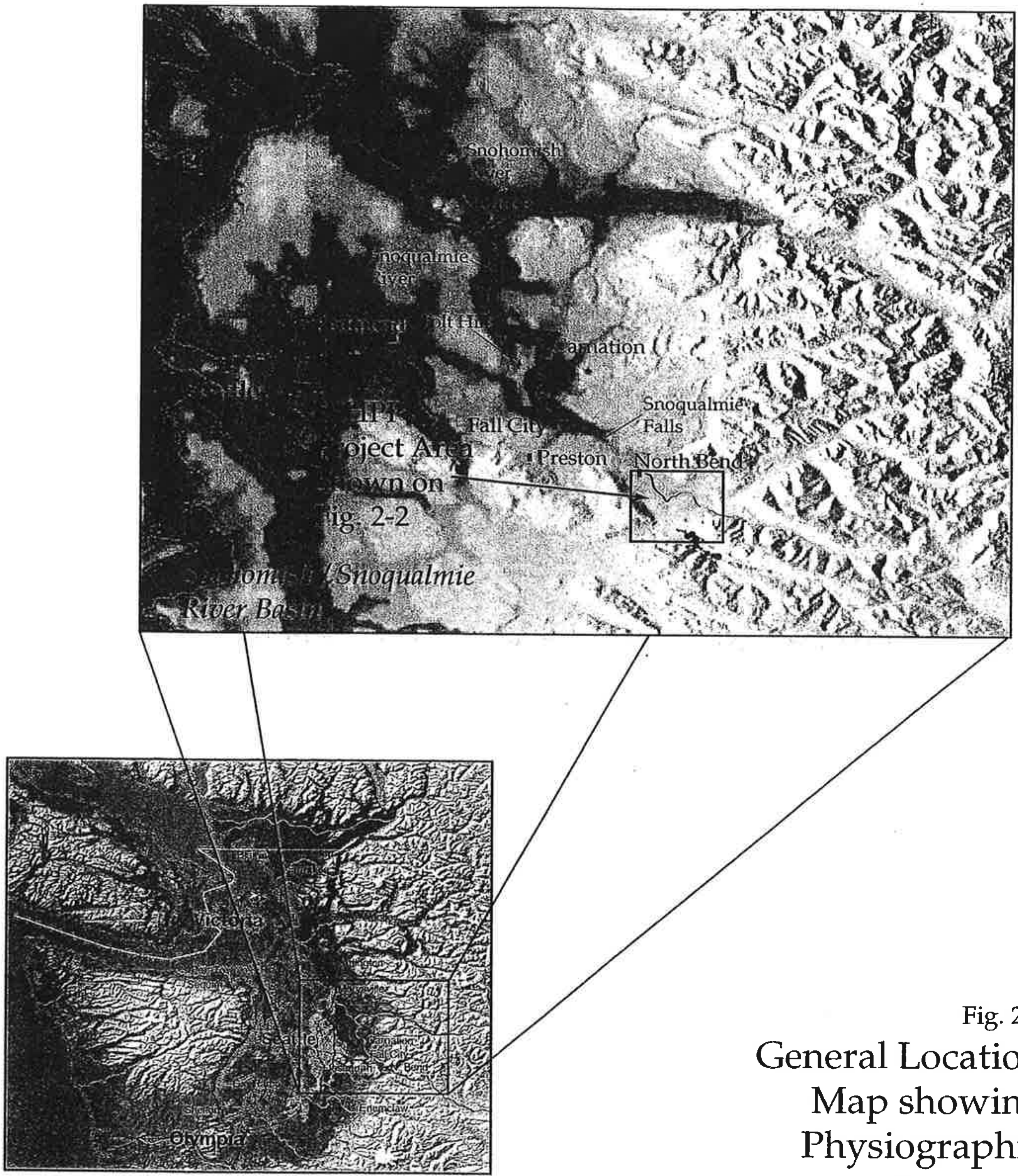

Notes:
- Shaded relief map based on U.S.G.S
  3 arc second digital elevation database
- Not to Scale; Locations are generalized

N

Fig. 2-1

General Location Map showing Physiographic Features

Sallal Water Association
September 2, 1998

Compass
Geographics Inc.

ATTACHMENT A

ATTACHMENT A

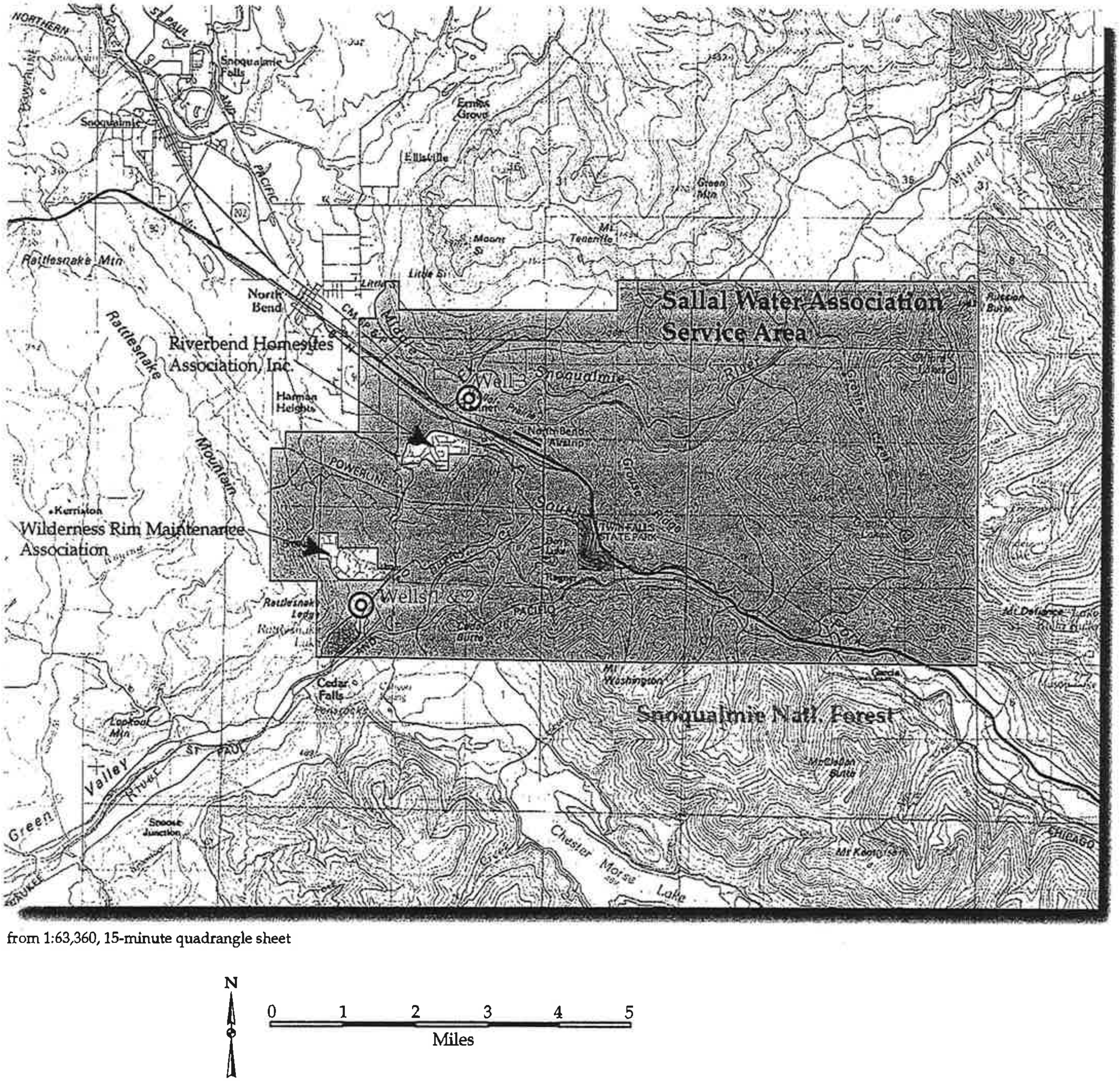

from 1:63,360, 15-minute quadrangle sheet

Legend

▨ Sallal Water Association Service Area

☐ Water Systems within Sallal Water Association Service Area (Riverbend and Wilderness Rim)

◎ Production Well

Well #	Name
1 & 2	Rattlesnake
3	Edgewick

Figure 2-2

Sallal Water Association Service Area Boundary and Wells

Sallal Water Association
September 2, 1998

Compass Geographics Inc.

ATTACHMENT A

Well # 1 (Test Well #1) Well

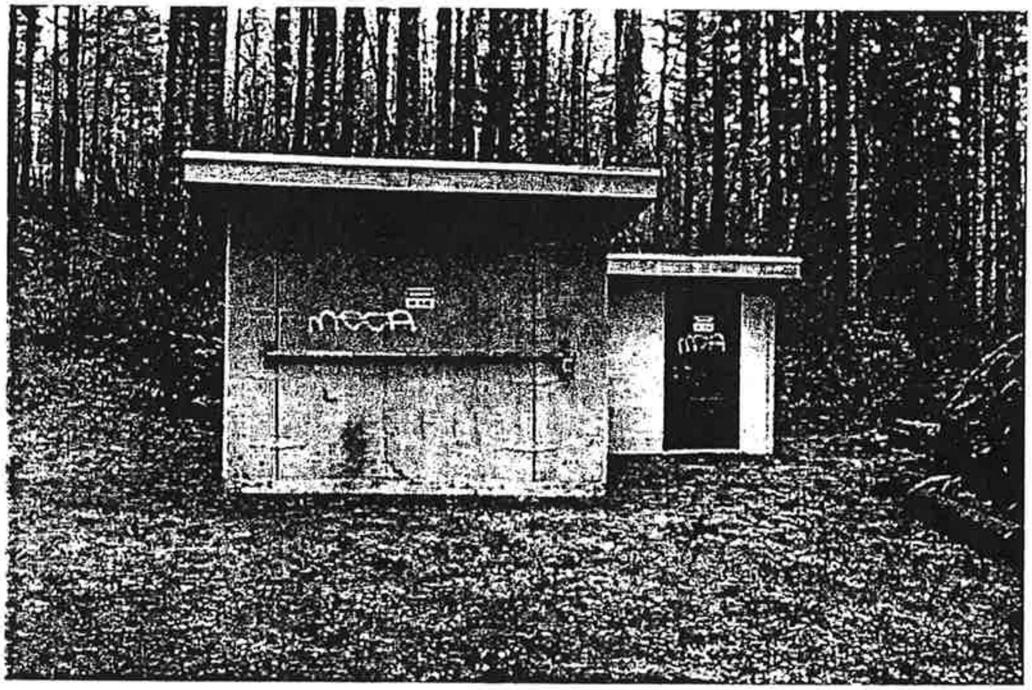

Well # 2 (Production #1) Well - Emergency generator is contained within larger "garage" portion of wellhouse

Fig. 2-3

Photographs of Production Well Sites

Sallal Water Association
September 2, 1998

Compass Geographics Inc.

ATTACHMENT A

Well # 3 Edgewick Well

Fig. 2-4

Photographs of Production Well Sites

Sallal Water Association
September 2, 1998

Compass
Geographics Inc.

ATTACHMENT A

Table 2-1

Summary of Water Production Wells
Sallal Water Association

Well # Well Name	Well #1 Test Well #1	Well #2 Production Well#1	Well #3 Edgewick
Location			
Map Location Identification #	#1	#2	#3
Township, Range, Section	23N, R8E , sec 34	23N, R8E , sec 34	23N, R9E , sec 18
Qtr, Qtr. Section	NW NE sec 34	NW NE sec 34	SE SW sec 18
Latitude.-(degree,decimal minutes)	N 47 26.38'	N 47 26.31'	N 47 28.19'
Longitude.-(degree,decimal minutes)	W 121 46.12'	W 121 45.99 '	W 121 42.59'
Well Construction			
Approximate Surface Elevation (ft)	961	920	860
Measuring Pt. Elevation (toc)			
Well Depth (ft bgs)	348	163	255
Screened Interval depth (ft bgs)	122-182 & 295-305	154 - 163	238 - 248
Well Screen length (ft)	70	9	10
Water Table Depth (btoc)		37.24	200
Water Table Elevation (ft)			
Casing Diameter (in)	12 & 8	10	8
Well Capacity/Production			
Annual Well Production (gals)*	63,284,000	65,571,000	15,720,400
Normal Capacity (gpm)**	800	800	76
Tested Capacity (gpm)	1890	1000	125
Pump Horsepower	100	100	15
Water Rights			
Instantaneous (gpm)	*1600*****	*1600*****	91
Annual (af/yr)	*696*****	*696*****	102
Pumping Test Results			*NA*
Transmissivity (GPD/ft)	99000	379500	
Transmissivity (ft2/min))	9	34.5	
Specific Capacity (gpm/ft)		20	
Pumping Test Rate (gpm)		1000	
Evaluation Method			

* Estimated annual well production for 1997 based on Water System production records and/or anticipated future production from the well

** Well and hydrogeologic values used for analytical modeling and/or Calculated Fixed Radius Delineation Methods

*** Pumping test results from pumping tests conducted by various subcontractors on each production well; NA if not available

**** Certificate of Water Rights for Well #1 and Well#2 is combined with total rights shown for both wells

ATTACHMENT A

3 HYDROGEOLOGIC SETTING

3.1 Geology

The geological history of the region contained with the Sallal Water Association begins with mountain building episodes of Tertiary Age, resulting in the creation of the current Cascade Range approximately 20 to 30 million years ago. This was followed by a series of continental glacial advances and retreats, the "Ice Ages", which occurred during the Pleistocene epoch of the Quaternary Age, dating back approximately 10,000 to 1.6 million years before present.

The Sallal Water Association service area occurs within the Puget sound Lowland, a topographic depression between the Cascade mountains to the east and the Olympic Mountains to the west. As Ice Age glaciers advanced and retreated, a series of glacially derived deposits were deposited on the land surfaces and valley floors. Most of the area within the Association is primarily covered by alluvial deposits associated with the Snoqualmie River and unconsolidated glacial deposits associated with the latest glacial advance within the Puget Sound region, known as the Vashon Stade of the Fraser Glaciation. The glacial deposits are not as deep within the Association area as elsewhere within the Puget Sound Lowlands, a likely indication that this area was near the margin of the ice-covered area and was not overridden to the extent of other, more centrally-located areas. The oldest of the glacial deposits in the Puget Sound area are about 15,000 years old, and are generally classified within these five categories, listed youngest to oldest:

- Recent Alluvium, deposited by the Snoqualmie River, makes up the flat terrain of the river valley.
- Recessional Outwash – materials that were deposited from water flowing off the glaciers as they retreated to the north at the end of the last Ice Age. Recessional Outwash deposited by flowing streams is generally coarser grained than that deposited in lakes, which is important in understanding associated groundwater behavior. Outwash is found throughout the Cedar River Watershed and forms the northern slope of Rattlesnake Mountain, along the southern boundary of the Association. These deposits were accumulated as meltwater from retreating glaciers flowed into the ancestral Snoqualmie River, which had been diverted from its present course by a glacial dam. The river, at that time, flowed through the gap currently occupied by Rattlesnake Lake, at the eastern base of Rattlesnake Mountain.
- Recessional Lake Deposits – These fine-grained deposits were formed where glacial meltwater and sediments were discharged into an ice-dammed lake at the toe of the Puget Sound lobe. Locally significant elsewhere, these deposits are not found within the Association boundaries.

- Vashon Till – materials that were deposited beneath the glacier and/or overridden by it during its southerly movement. Since they were not transported and sorted by water, these deposits are usually an unsorted mixture of boulders, gravel, and sand in a silty clay matrix. Till is typified by its extremely dense structure, the result of being compressed by an ice sheet several thousand feet thick. Vashon Till caps some ridgelines in the southeastern area of the Association franchise.

- Advance Outwash – Coarse-grained materials that were deposited from moving water, flowing off the Vashon glaciers as they advanced southward through the Puget Sound lowlands. These deposits are not found within the franchise.

- Moraine Deposits – Glacial moraine deposits occur in the Chester Morse and Rattlesnake Lake area. These consist of three to four gravel terraces, highly compacted till, lakebed silts, and clay deposits. In general, the moraine deposits are finer-grained up the valley toward the Chester Morse Lake, with coarser-grained, highly-permeable sand, gravel, and cobble outwash deposits in the lower part near Rattlesnake Lake.

- Transitional Beds – These deposits of silty clay, peat, and wood, were deposited into standing water that had been ponded against the advancing Vashon glaciers. No exposures are found within the Association franchise area.

- Pre-Fraser Deposits – Glacial and sedimentary deposits that pre-date the Fraser Glaciation. These may include old stream or lake deposits, glacial till, ancient landslides, coal, peat, or other unconsolidated deposits. These deposits do not occur within the Association boundaries.

- Bedrock – Bedrock is exposed in the Rattlesnake Lake area of Sallal Wells #1 and #2. The bedrock in this area comprises the Keechelus Volcanic Group, which consists of interbedded andesitic tuff breccias, lava flows and welder tuffs. These bedrock materials were locally eroded to form a channel, which contains the overlying moraine deposits.

Bedrock is not typically exposed within the Association boundaries. Some exposures, primarily of andesite and some metamorphic rocks, exist on Rattlesnake Mountain (the "Rattlesnake Ledge"), Tanner Butte, and at the base of Mt. Si.

3.2 Hydrogeology

Geohydrologic units within the Snoqualmie Valley correspond to the geologic units identified within the area, with minor differences. In particular, the Pre-Fraser deposits, found at depth beneath most of the valley, have been divided into several geohydrologic units because of their geohydrologic characteristics.

Fine grained unconsolidated deposits, composed of silty and clayey soil grains, usually do not promote easy movement of groundwater. These deposits usually form *confining layers* or *aquitards*, either preventing downward percolation of groundwater, or in some cases creating artesian conditions where they confine water in lower strata that has moved from a topographically higher region. The Vashon Till is a good example of a confining layer: its poorly sorted structure, combined with its dense compaction, generally inhibits water movement within or across the unit.

Medium to coarse-grained deposits, particularly where well sorted, may act as excellent sources of water, or *aquifers*, if sufficient water is available from precipitation or surface sources for recharge. Glacial outwash deposits are often good aquifers because they have sufficient storage capacity and allow water to migrate through their structure.

Geohydrologic units in East King County have been differentiated into aquifers and confining layers by the U.S. Geological Survey, on the basis of a U.S.G.S. study of 604 wells within the East King County Ground Water Management Area. Table 3.1 provides details about the major geohydrologic units and identifies the units where Sallal wells are completed. The units are described from the surface downward.

Table 3.1 Geohydrologic Units of the Sallal Water Association and Surrounding Area

Unit Name	Well Completion(s)	Description and Characteristics
Alluvial Deposits	Edgewick # 3	Sand, silt, and clay in Lower Snoqualmie Valley. A productive aquifer in the Upper Snoqualmie Valley; less predictable in the Lower Valley (downstream from Snoqualmie Falls).
Recessional Outwash	Rattlesnake #1 & #2	Moderately to well-sorted sand and gravel. Includes poorly sorted ice-contact deposits and fine-grained ice-dammed lake deposits. An aquifer where saturated, usually unconfined. Perched conditions locally. Average thickness is 60 feet.
Vashon Till		Compact to extremely dense unsorted sand, gravel and boulders in a clay/silt matrix. Local sand and gravel lenses. Usually considered a confining bed or aquitard, but can yield water in small quantities locally. Average thickness is 70 feet.
Tertiary Bedrock		Andesite bedrock with local basalt and diorite (volcanic rocks) with local sandstone, siltstone, and conglomerate. Locally an aquifer, with water contained in fractures. Generally unreliable. Not significant in Sallal Water Association. Thickness not measured.

3.3 Aquifer Susceptibility

Aquifer susceptibility refers to the potential risk for contamination of a drinking water supply by discharges or releases at or near the ground surface. In Washington, the susceptibility of an aquifer is ranked as high, moderate, or low on the basis of several factors. These include:

- The type and condition of the well's surface seal and casing, which will prevent surface water from entering the well.

- The depth and type of the aquifer. Shallow, unconfined aquifers are more susceptible to releases at the ground surface than deep aquifers with one or more confining layers. Aquifers in granular bedrock or unconsolidated formations are less susceptible to contamination than bedrock aquifers where water may travel relatively quickly over long distances in joints, fissures, or cavern systems.

- Interaction with surface water. Wells in alluvial deposits adjacent to rivers may draw significant quantities of their water from the surface stream with very little resident time in the formation to aid in purification.

- Land use in the vicinity of the well. Agricultural usage with heavy ag chemical applications, or industrial usage, are higher risk activities than undeveloped forest or grasslands. Residential usage with septic systems is likely to be higher risk than the same land use with a public sewer system installed.

The Sallal Water Association wells are rated as having a low susceptibility.

4 DELINEATION OF THE WELLHEAD PROTECTION AREAS

Several methods of differing sophistication can be used in the determination of the Wellhead Protection Areas for each of the production wells. A brief summary of the various methods is provided below in the order of sophistication from the least sophisticated to the most sophisticated method.

- **Calculated Fixed Radius Method (CFR).** This method is the simplest approach and is based on a simplified water balance formula. This method does not require any knowledge of the aquifer characteristics, except for porosity. The well capture zone derived from this approach simply consists of a circular area surrounding the wellhead. No consideration is given to the regional hydraulic gradient, or aquifer boundaries.

- **Hydrogeologic Mapping.** This method involves mapping the aquifer boundaries, particularly recharge areas, in relation to the wells of interest. A qualitative assessment of groundwater can provide general information on the source of water to wells and its direction of flow. Hydrogeologic mapping is usually carried out to some extent for any WHPA analysis and can generally be used to determine the ultimate recharge areas of the aquifer. A significant portion of the Snoqualmie Valley including the project area has been mapped as part of a U. S Geological Survey water resources investigation (USGS, 1995).

- **Conventional Analytical Modeling.** This method takes into account the basic aquifer characteristics, such as transmissivity, aquifer thickness and hydraulic gradient. Analytical modeling most often assumes steady-state conditions and can be used to calculate capture zones to the boundary of the hydrogeologic system. An example of a commonly used analytical model is the U.S. EPA WHPA code.

- **Sophisticated Analytical Modeling.** This method utilizes techniques that have more recently been developed that can take into account boundary conditions and variable recharge conditions in addition to the basic characteristics, such as transmissivity, aquifer thickness and hydraulic gradient. TWODAN is one such model developed by Fitts (1995). This model is a two-dimensional analytical groundwater flow model developed to evaluate groundwater flow and determine WHPA's. The program is capable of solving large numbers of analytical solutions to model diverse irregular boundary conditions, and is more sophisticated than other analytical models such as the U.S. EPA WHPA code.

- **Numerical Groundwater Flow Modeling.** This method is the most sophisticated used to delineate WHPA's. Groundwater flow models are often used for complex systems composed of irregular aquifer boundaries and multiple wells. A numerical groundwater flow model incorporates the hydraulic characteristics and boundary conditions of the aquifer and uses a "particle tracker" to numerically simulate the rate and direction of "particles" of groundwater moving through the system. The final accuracy of the WHPA derived from a numerical groundwater flow model is a function of how well the groundwater flow model can simulate observed field conditions. This is often a function of how much data is available to develop and verify the model. When the data is limited or cost prohibitive to obtain (i.e. additional monitoring wells), a less sophisticated WHPA delineation method may be more appropriate than numerical groundwater flow modeling.

The proposed Wellhead Protection Areas presented in this report are based on a combination of hydrogeologic mapping and TWODAN analytical modeling, as described above. TWODAN analytical modeling was performed on all three of the Association's supply wells. However, the WHPA for Wells #1 and #2 was subsequently modified using hydrogeologic mapping and interpretation of previous hydrogeologic investigations conducted in this region of complex hydrogeology.

4.1 Groundwater Modeling

Analytical modeling is a useful tool for evaluating groundwater flow and understanding the aquifer system and how contaminants may be transported through the system. However, it must be realized that a groundwater model is simply a tool for hydrogeologic analysis and it is rare that a groundwater model can accurately simulate or predict groundwater conditions in all portions of the aquifer system. The analytical groundwater modeling technique used in this report is more accurate than most of the other available methods commonly used to delineate a WHPA.

4.1.1 Selection of Groundwater Model and Model Capabilities

Groundwater modeling to determine the capture zones for the Sallal Water Association production wells was performed using the two-dimensional analytical groundwater flow model TWODAN (version 4.0; Fitts, 1995). The specific groundwater modeling tasks were subcontracted to Golder Associates Inc. to employ the expertise of groundwater modelers specifically familiar with the TWODAN analytical groundwater model. Golder used the model to determine the approximate six-month, one-, five-, and ten-year time of travel capture zones for the three production wells used by the Sallal Water Association (wells #1 and #2 were modeled together since they are in close proximity). The TWODAN analytical model code has the following capabilities:

- Spatially variable recharge or leakage can be represented. A uniform recharge or leakage can be assigned to the entire model domain. Different recharge or leakage rates occurring locally can be represented by circular domains of any assigned radii;
- Confined or unconfined aquifer systems can be modeled;

- Variations in aquifer properties (thickness, transmissivity, storativity and porosity) can be incorporated as appropriate throughout the model domain;
- Injection and pumping wells can be simulated;
- Lakes can be represented using linesinks with specified discharge or constant head;
- Impermeable/resistant boundaries for any configuration can be modeled; and
- Variable well-pumping scenarios can be simulated.

Not all of the above features were required to model the Sallal Water Association production wells. The advantages of the TWODAN model are its simple input, accuracy, speed, lack of a fixed grid, and direct graphical output.

4.1.2 Modeling Approach

A two-dimensional analytical element groundwater model called TWODAN (version 4.0; Fitts, 1995) was used to estimate the six-month, and one, five and ten-year capture zones for the Sallal Water Association production wells. The groundwater flow field is simulated to be consistent with known water level data and aquifer properties. Pumping wells are then inserted into the flowfield and particle traces are used to delineate the time of travel capture zones for each well or wellfield.

Wells of the Sallal Water Association are completed in a hydraulically similar aquifer. Two aquifers (the valley aquifer and the bedrock upland aquifer) were modeled in the simulation used to model the Sallal and nearby Riverbend production wells. Therefore, groundwater flow is simulated in the Valley (Qva) aquifer to delineate Wellhead Protection Areas for production wells #1 / #2 and #3.

4.1.3 Assumptions

The key parameters that determine the rate of groundwater flow are transmissivity and hydraulic gradient. This section describes the assumptions used for the analytical model. Additional specific information concerning the TWODAN modeling effort for the Sallal Water Association production wells may be found in Golder's modeling report attached as Appendix C. The key assumptions are summarized as follows:

- The current installed normal pumping capacity of each well as detailed in Table 2-1 was used for the modeling values.
- Valley (Qva) and Moraine Outwash Deposits Aquifer. A regional recharge rate of two feet per year, and a transmissivity of 22,000 ft^2/day was used, consistent with pumping tests performed on Sallal wells #1, #2 and #3 as well as USGS data (Turney and others, 1995). The Moraine Outwash Deposits in

the vicinity of Sallal Wells #1 and #2 were laid down by outwash streams in an older bedrock channel between the Cedar River and Snoqualmie River Valleys. The valley aquifer is strongly coupled with the Snoqualmie River based on water level fluctuations in monitored wells undertaken in a recent study (Golder, 1998). Therefore, constant head line sinks were placed along reaches of the Middle and South Forks of the Snoqualmie River, Chester Morse Lake and Rattlesnake Lake with values obtained from the USGS topographic maps. The resulting groundwater flow patterns were consistent with those of Turney and others, 1995

- Bedrock Aquifer. The bedrock aquifer extends from the sharp topographic gradient art the edges of the valleys toward the upland areas. There is an extreme contrast in transmissivity between the valley and the bedrock aquifers. For modeling purposes, a buffer was placed between the two aquifers to ensure numerical stability. An average transmissivity of 400 ft^2/day was used for the bedrock aquifer. The value was calculated from an average hydraulic conductivity of wells completed in the bedrock aquifer (Turney and others, 1995). The resulting groundwater flow patterns were consistent with those of Turney and Others, 1995

- Wells #1 and #2 were modeled together since they are so close together.

4.2 Model Results

As previously mentioned, Golder Associates' report and data concerning the TWODAN analytical groundwater modeling effort and the determination of the time of travel zones is provided in Appendix C. Golder also provided the WHPA and time-of-travel capture zone information to Compass Geographics Inc. (CGI) as CAD files in electronic format for import into CGI's Geographic Information System (GIS) and graphic computer programs. These modeled WHPAs were refined based on existing hydrogeologic mapping and "ground-truthing" efforts near the wells.

The WHPA for Sallal Wells #1 and #2 was modified from the TWODAN analytical groundwater model to account for the approximate zone of contribution from the Chester Morse Lake. This modification was based on the extensive hydrogeologic mapping and investigations that have been conducted in this relatively complex local hydrogeologic region.

To summarize, the hydrogeology in the vicinity of Wells #1 and #2 consists of volcanic bedrock that was locally eroded, forming a channel connecting the Cedar River and Snoqualmie River valleys. Various stages of glaciation filled the channel with moraine deposits. Groundwater seepage from the north abutment of the Masonry Pool of the Chester Morse Lake provides a major source of recharge to the moraine groundwater system and dominates the local hydrology. This seepage increases significantly when the pool level rises. Under high pool conditions, this extensive groundwater flow from the Chester Morse Lake reaches a groundwater divide downgradient within the buried bedrock channel diverting approximately 70-80% of the groundwater to the Cedar River Basin and the remainder to the Snoqualmie River Basin. Groundwater flow patterns and water level elevations are depicted in Figure 4-1. There is a slight variability in flow patterns and the actual zone of contribution for Sallal Wells #1 and #2 depending on the Masonry Pool level and the subsequent rise in elevation for groundwater and at Rattlesnake Lake.

The WHPAs, as modified from the modeling, were refined and finalized into specific detailed maps and graphics depicting the proposed WHPA for each of the production wells. The time of travel zones and the proposed Wellhead Protection Area for the Sallal Water Association wells is depicted in Figure 4-1 and Figure 4-2.

However, it must be understood that the WHPAs depicted on the figures (and almost all WHPAs, in general) are very conservative and extremely protective of the well for three reasons. First, the capture zones assume that contamination released in a WHPA would reach the aquifer instantaneously. This is rarely the case. Contaminants released at ground surface can be adsorbed to soil particles and dispersed and diluted as they move down to the aquifer through infiltration. However, improperly constructed and/or abandoned wells can provide a more direct pathway for contaminants to reach the watertable. The vertical travel time depends on the hydraulic properties and thickness of the unsaturated zone and the type of contaminant. The vertical time of groundwater travel is usually controlled by the least permeable layer of the unsaturated zone. Since there is no specific contaminant that is anticipated to be a likely contaminant of concern and given the inherent conservatism of the established time of travel zones for each of the wells, vertical travel times were not determined.

Second, the TWODAN model (like most analytical models) is conservative in that it underestimates the effect of infiltrating precipitation reaching the aquifer all along the flow path in the various time of travel zones. Recharge is used to simulate the flow field and has no effect on particle tracking. The model instead evaluates particle travel back along the flow path to the requested duration of the time of travel. While useful to understand the direction and geometry of the time of travel zones for the well in areas of higher recharge, the model overestimates the capture zone volume and length for the specified well production.

Third, the depiction of the WHPAs and their characteristic "slice of pie" shape is due to the common practice of inducing a slight rotation of the capture zone typically about 10 degrees to the either side of the modeled flow path. This accounts for uncertainty or naturally occurring irregularities in the groundwater flow path. However, it also produces a WHPA that is geometrically significantly larger than the actual capture zone for the well.

Thus the Wellhead Protection Areas depicted in the Sallal Water Association Wellhead Protection Plan are quite protective of the actual capture zones for each well. Having said that, we also feel that given the additional anticipated growth and need for water sources in the area serviced by the Sallal Water Association, the decision to set a fairly conservative WHPA is a valid one for protection of the future groundwater resource. The Board of Directors of the Sallal Water Association agreed with the rationale for the establishment of the proposed Wellhead Protection Area as shown in Figures 4-1 and 4-2.

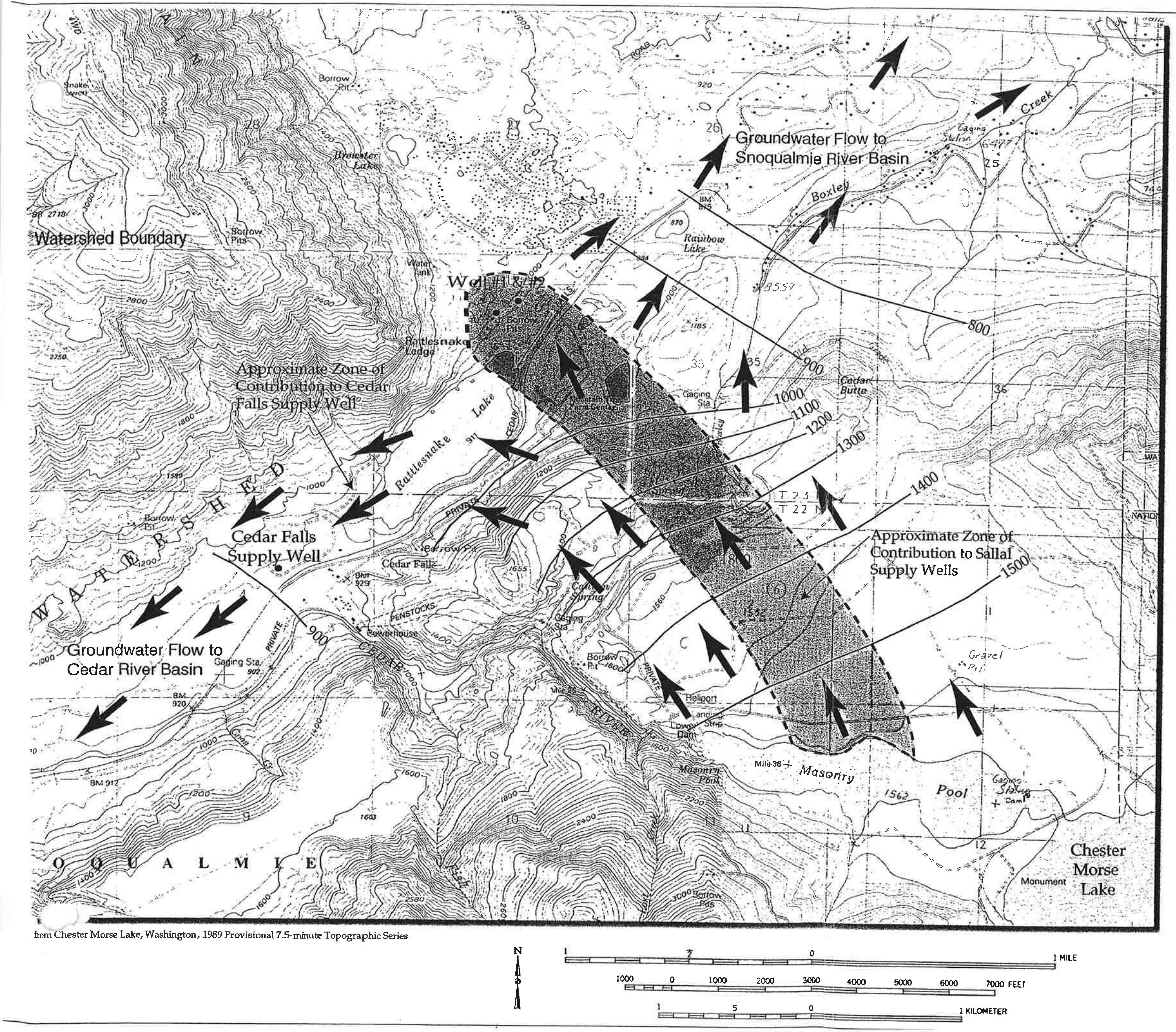

from Chester Morse Lake, Washington, 1989 Provisional 7.5-minute Topographic Series

ATTACHMENT A

Sallal Groundwater

The groundwater source for the Sallal #1 and #2 wells is leakage from the Masonary Pool portion of Chester Morse Lake into the glacial moraine aquifer groundwater system. Approximately 70% to 80% of this groundwater flow is into the Cedar River Basin with 20% to 30% of the groundwater flow into the Snoqualmie River Basin. Rattlesnake Lake is a result of the groundwater recharge into the moraine aquifer system. Only during high water levels in Rattlesnake Lake (elev. 905+'), does the lake discharges via the surface water Rattlesnake Ditch to the north (Snoqualmie Basin). During the majority of the time, Rattlesnake Lake discharges via leakage to the groundwater sytem to the south (Cedar River Basin). The capture zone for the Sallal wells #1 and #2 includes potentially a small portion of the north end of Rattlesnake Lake and a capture zone that tracks back to the Masonary Pool of the Chester Morse Lake. Travel time from the Masonary Pool to the Sallal wells is on the order of six months. One-, five- and ten-year time of travel zones for the Sallal wells would include the Chester Morse Lake, the upper Cedar River and the upper reaches of the Cedar River Watershed, respectively.

Time of Travel Zones for Sallal Production Wells

⑥ - 6-month Time of Travel Zone

① - 1-year Time of Travel Zone

⑤ - 5-year Time of Travel Zone

Proposed Well #1 & #2 Wellhead Protection Area

- Groundwater Flow Direction

800 - Groundwater Elevation (Feet MSL) based on Cedar Falls Supply Well WHPP by Pacific Groundwater Group, 1997

Fig 4-1

Sallal Water Association Wells #1 & #2 Wellhead Protection Areas

Sallal Water Association
September 2, 1998

Compass Geographics Inc.

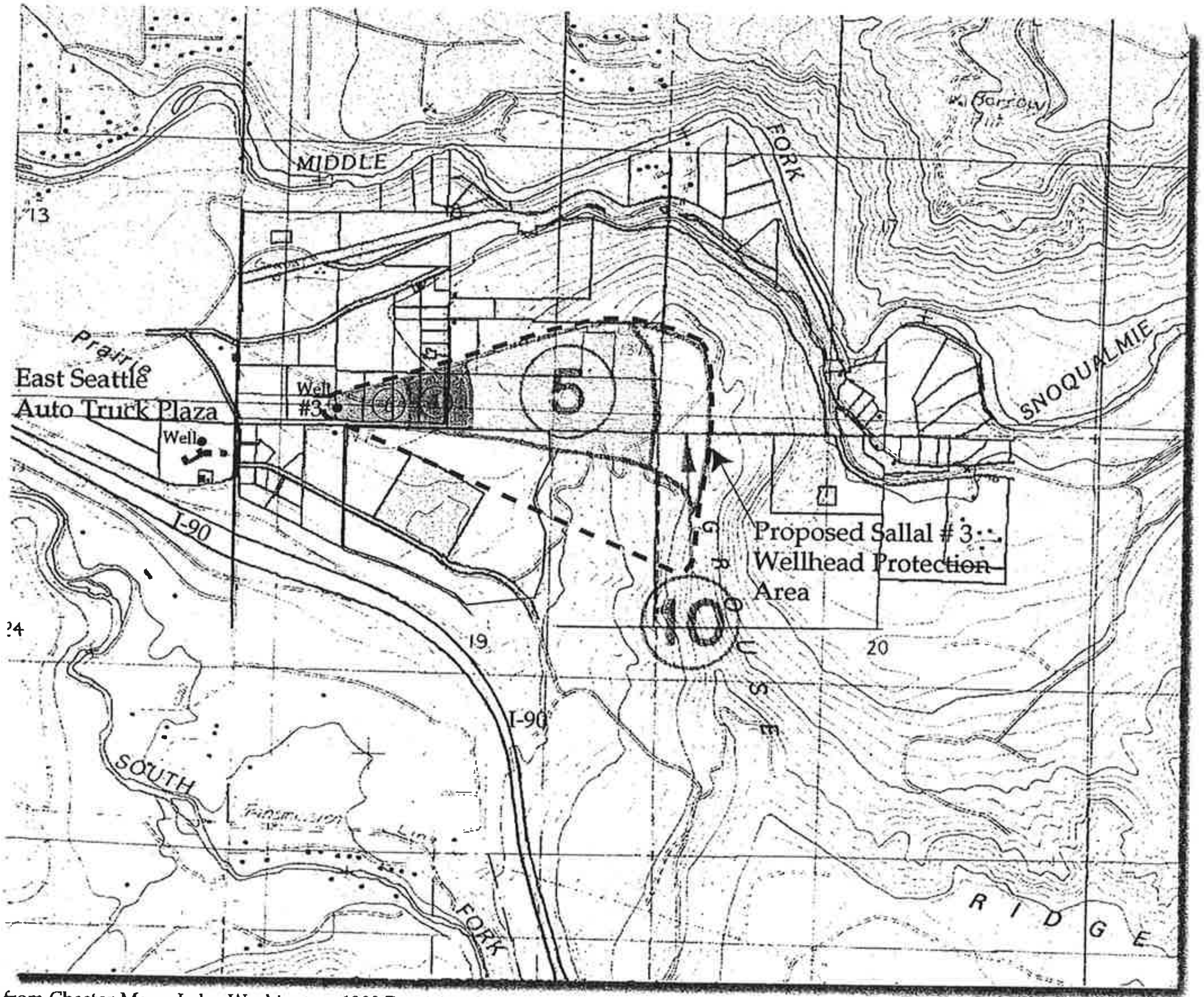

from Chester Morse Lake, Washington, 1989 Provisional 7.5-minute Topographic Series

Time of Travel Zones for Sallal Production Wells

⑥ - 6-month Time of Travel Zone

① - 1-year Time of Travel Zone

⑤ - 5-year Time of Travel Zone

⑩ - 5-year Time of Travel Zone

Sallal Groundwater

The source area for the Sallal Production Well #3 is the Grouse Ridge Area to the east of the well. This highland and the bedrock core within Grouse Ridge influences the groundwater flow in this region between the glaciofluvial deposits in the Middle and South Fork Snoqualmie Valleys. The groundwater flow is from Grouse Ridge to the west.

▭ Proposed Well #3 Wellhead Protection Area

Fig 4-2

Sallal Water Association Well #3 Wellhead Protection Areas

Sallal Water Association
September 2, 1998

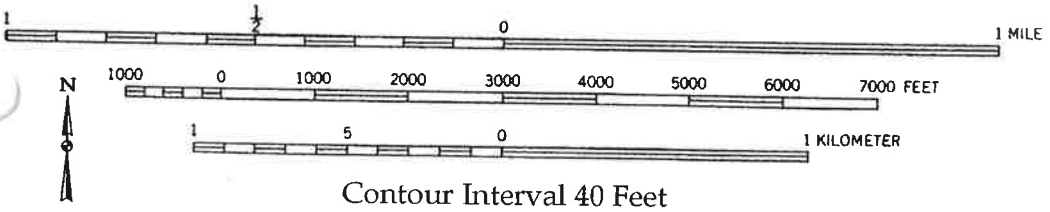

Contour Interval 40 Feet

Compass Geographics Inc.

ATTACHMENT A

5 POTENTIAL CONTAMINANT SOURCE INVENTORY

5.1 Methodology

An inventory of potential contaminant sources that may impact groundwater within designated Wellhead Protection Areas is an essential element of all Wellhead Protection Plans. The purpose of this section is to present an inventory of parcels/associated land use activities and potential contaminant sources that may pose a threat to the Sallal Water Association's water supply.

Groundwater contamination originates from both point and nonpoint sources. Point sources of contamination are those that can be traced to a specific discharge point. Good examples of point sources would include landfills, an underground storage tank, industrial waste discharge pipe or transportation spill. Nonpoint sources are those that are attributed to a more widespread release of contamination rather than to a single identifiable location. Examples of nonpoint sources of contamination include general stormwater runoff from asphalted streets or agricultural applications of pesticides/herbicides.

For this plan, the inventory was completed through a two step process that included a search of current government database information using a Geographic Information System, followed by a field inspection task to verify the database information and discover previously unrecorded sources.

The Sallal Water Association is primarily a semi-rural area. All residences rely on septic systems of various types to treat and discharge wastewater. These systems are generally designed to minimize the impact on groundwater resources, but are recognized as potential contaminant sources if the systems are damaged, undersized, or misused. However, a benefit of properly operating septic systems is that water extracted from wells for domestic supply is eventually returned to the groundwater system. This represents recycling in one of the truest senses and distinguishes these rural water systems from sewered urban areas where the water is typically "totally consumed" since it is piped out of the source and use areas. Recent engineering studies have examined the significant lowering of groundwater levels when a previously unsewered area is connected to storm and sanitary sewer systems.

There are several manufacturing, light / heavy industrial operations, retail sales facilities, and other commercial establishments within the Sallal Water Association service area that could be regarded as potential sources of contamination.

5.1.1 Database Search

Database information used in this report was supplied by Vista Information Solutions, Inc., of San Diego, California and included information from a variety of government sources obtained through the end of April 1998. Vista has access to the most current information from Environmental Protection Agency databases, other Federal sources, Washington State Department of Ecology, and other sources. These information sources are continually updated to assure that the most current data is available; in fact, the Vista databases are frequently more current than the information that is available to the general public through information requests to individual governmental agencies. These databases contain known and suspected hazardous materials spills or releases, registered hazardous waste generators, historical landfill sites, small quantity hazardous waste generators, underground storage tanks and other database information related to the use, transport, storage, or release of hazardous materials.

Vista's environmental data packages are used by a variety of public and private sector environmental professionals for risk assessments, remediation studies, site assessments and other environmental risk management functions. This level of environmental scrutiny exceeds the current requirements of the Washington State Wellhead Protection Plan and provides an enhanced level of due-diligence in the evaluation of potential and existing sources of contamination that may pose a threat to public groundwater sources.

The Vista data packages contain records from approximately 500 various federal, state and local information sources. An abbreviated list of the records contained in the environmental geographics data packages would include:

NPL – National Priorities List. These sites fall under the EPA's Superfund program which was established to fund cleanup of contaminated sites that pose a risk to human health and the environment.

CERCLIS – Comprehensive Environmental Response, Compensation and Liability Act Information System. This database contains approximately 15,000 nationally identified hazardous sites that may require cleanup.

RCRIS – Resource Conservation Recovery Act Information System. This combination of databases provides information on sites which generate, transport, store, treat or dispose of hazardous waste. These databases include corrective actions (CORRATS), Treatment, Storage and Disposal facilities (TSD), and RCRA large and small generators.

ERNS – Emergency Response Notification System. This database contains information on release of oil and hazardous substances from spill reports made to EPA, U.S. Coast Guard, and Dept of Transportation.

LUST – Leaking Underground Storage Tanks. Information from the state of Washington on leaking underground storage tanks which are one of the major causes of soil and groundwater contamination.

SWS and SWLF – Solid Waste Sites and Solid Waste landfill Sites. This database contains information collected at the state and local level providing a comprehensive list of solid waste sites including active and inactive landfills,

5.2.1.2 One-year Time of Travel Zones

No historical or currently existing actual sources of contamination were discovered during the inventory of the Sallal Water Association WHPAs.

5.2.1.3 Five-year Time of Travel Zones

No historical or currently existing actual sources of contamination were discovered during the inventory of the Sallal Water Association WHPAs.

5.2.1.4 Ten-year Time of Travel Zones

No historical or currently existing actual sources of contamination were discovered during the inventory of the Sallal Water Association WHPA.

Additional actual and existing sources of contamination may exist in proximity but cross-gradient or downgradient of the proposed Wellhead Protection Areas. An example of this is the Seattle East "Truck Town" facility at the Edgewick interchange on I-90 near Sallal Well #3. The business, although a known source of contamination due to spills and leaking USTs, is not anticipated to have an impact on production Well #3 since the well is located upgradient from the potential source. However, the business category bears mentioning since similar businesses have historically been investigated as contaminant sources that have released significant volumes of contaminants ranging from heavy metals to fuels, oils and solvents. These actual and potential sources in proximity to the proposed Wellhead Protection Areas were noted on Figures 5-1 and 5-2.

5.2.2 Potential Contaminant Sources

5.2.2.1 6-month Time of Travel Zones

Gravel/Asphalt Operations. Potentially the highest risk to the Association's Well #3 is posed by development of a gravel and asphalt operation on property within and along the southern boundary of the Sallal Water Association Wellhead Protection Area for Well #3. The proposed operations (in particular settling basins and asphalt operations) should be located within the southern portion of the parcel. Risk associated with the proposed operations and facilities can be dramatically minimized by choosing suitable locations for critical operations.

Single Family Residence Septic Systems. These single family homes are located on larger lots (1 to over 5 acres) and are equipped with septic systems. The majority of these homes are of fairly recent construction with engineered septic systems that should perform properly for a significant period, if properly maintained. Most residential building and grounds maintenance utilizes limited quantities of chemicals, fertilizers, herbicides and insecticides.

Rattlesnake Lake / City of Seattle Park. The primary contaminants of concern with respect to Rattlesnake Lake and the associated City of Seattle day-use park are bacteriological and viral. Most of the year, Rattlesnake Lake discharges via

ATTACHMENT A

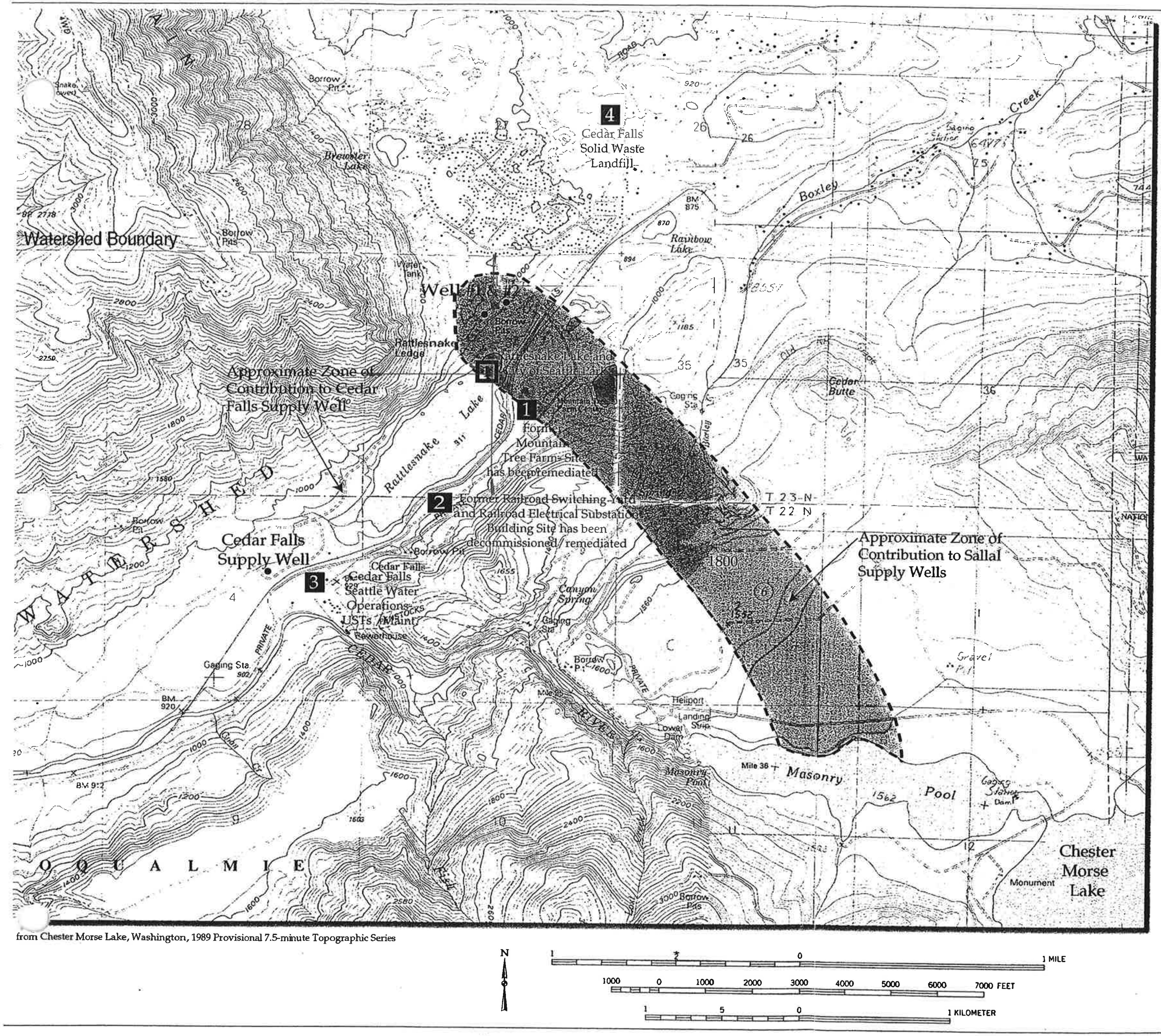

from Chester Morse Lake, Washington, 1989 Provisional 7.5-minute Topographic Series

Potential and Existing Sources of Contamination

· - Residential Septic System (approx. location shown)

1 - Potential Contamination Source -Details on Map

2 - Existing Contamination Source -Details on Map

Time of Travel Zones for Sallal Production Wells

(6) - 6-month Time of Travel Zone

(1) - 1-year Time of Travel Zone

(5) - 5-year Time of Travel Zone

Proposed Well #1 & #2 Wellhead Protection Area

Fig 5-1

Potential and Existing Contamination Sources in the Sallal Wells #1 & #2 Wellhead Protection Areas

Sallal Water Association
September 2, 1998

Compass Geographics Inc.

seepage to the groundwater system with a flow path to the south (Cedar River). However, during very high water levels (905+) in the lake, it also discharges to the north via Rattlesnake Ditch (surface water) to the Snoqualmie River. Therefore, during high lake levels, there is a potential for contaminants in the lake and park to reach the Sallal Wells #1 and #2 groundwater source. The City of Seattle works diligently to maintain Rattlesnake Lake and the associated park in as clean a manner as possible. However, routine sampling of the lake in July 1998 did detect a high fecal coliform bacteria count in one sample, possibly due to high migratory bird populations or improper human waste disposal. Subsequent sampling has not detected a high bacteria level in Rattlesnake Lake. Given the predominant groundwater flow path from Rattlesnake Lake toward the south (and away from the wells) and the management of the area by the City of Seattle, the potential for impact on the Sallal Wells #1 and #2 appears to be low, but should be monitored in a cooperative effort with the City of Seattle.

5.2.2.2 One-year Time of Travel Zones

The one-year zones for Wells #1 & #2 exist primarily within the City of Seattle Cedar River Watershed. The one-year time of travel zone for Well #3 is in an area that may be further developed in the near future.

Gravel/Asphalt Operations. Potentially the highest risk to the Association's Well #3 is posed by development of a gravel and asphalt operation on property within and along the southern boundary of the one-year time of travel zone for Well #3, as described above.

Single Family Residence Septic Systems. These single-family homes are located on larger lots (1 to over 5 acres) and are equipped with septic systems. Most of these homes are of recent construction with engineered septic systems that should function properly for an extended period if properly maintained. Most general house and grounds maintenance utilizes limited quantities of chemicals, fertilizers, herbicides and insecticides

5.2.2.3 Five-year Time of Travel Zones

The five-year time of travel zone for the Sallal Wells #1 and #2 would include the Chester Morse Lake and the Cedar River watershed. This area is protected as part of the City of Seattle Watershed.

A significant percentage of the land-surface above Well #3 is covered with native vegetation on steeper slopes. Potential contaminant sources observed within the Five-year WHPA Zone for Well #3 includes:

Gravel/Asphalt Operations. Potentially the highest risk to the Association's Well #3 is posed by development of a gravel and asphalt operation on property within and along the southern boundary of the five-year time of travel zone for Well #3 as described above.

Single Family Residence Septic Systems. These single family homes are located on larger lots (1 over 5 acres) and are equipped with septic systems. Most of these homes are of more recent construction with engineered septic systems.

Grouse Ridge Forestry Practices. Weyerhaeuser currently manages the Grouse Ridge Area as a tree farm and uses herbicides to control the growth of certain portions of the tree farm. Treated sewage sludge has also been used as a fertilizer to promote evergreen tree growth within the tree farm.

5.2.2.4 Ten-year Time of Travel Zones

As previously discussed, the one-, five-, and ten-year time of travel zones for the Sallal Wells #1 and #2 would include surface water in the Chester Morse Lake, the upper Cedar River drainages, and the upper reaches of the Cedar River Watershed. This area is within the managed City of Seattle Cedar River Watershed, which has strict access controls.

Only a portion of the ten-year time of travel zone for Well #3 exists on Grouse Ridge; a minor groundwater divide on this ridge separates groundwater flow between the Middle Fork and the South Fork of the Snoqualmie River. The remainder of the ten-year time of travel zone is either infiltrating groundwater or future precipitation.

Grouse Ridge Forestry Practices. Weyerhaeuser currently manages the Grouse Ridge Area as a tree farm and uses herbicides to control the growth of certain portions of the tree farm. Treated sewage sludge has also been used as a fertilizer to promote evergreen tree growth within the tree farm.

There were no additional potential sources observed within the ten-year time of travel zones for Well #3. The area is undeveloped with most of the land-surface covered with native vegetation on the very steep slopes of Grouse Ridge.

5.3 Summary and Prioritization of Potential and Actual Contaminant Sources in WHPA

The Sallal Water Association is in a nearly ideal situation in many respects pertaining to the location of their primary production wells (Wells #1 and #2) within the City of Seattle watershed. This is a real advantage in managing a Wellhead Protection Area. The watershed area is already maintained relatively contaminant-free with in-place land-use planning/zoning that will prohibit future industrial or other impacts to the watershed and the Association's wells. The only potential impacts to this well would occur from spills or contaminants discharged within the immediate Rattlesnake Lake Park area. The Association should work closely with the City's Park department to ensure that proper safeguards are taken with regard to activities in this area. It is our understanding that most of these are in place such as controlled access to the watershed and park with no overnight users, no motorized boats on the lake (minimizes spill risks) and toilet facilities with containment vessels for collection and off-site waste processing. However, in general these wells are placed in a relatively ideal location.

Sallal Well #3 Wellhead Protection Area is nearly ideal given its location since the capture zone exists in the upland area of Grouse Ridge, This places most of the truck fueling, service center and industrial activities in this area down gradient of the well. Potential future activities which may result in potential sources of contamination include additonal residential housing development within the WHPA, forestry practices on Grouse Ridge and the development of the gravel resources on property adjacent to and within the proposed Sallal Well #3 Wellhead Protection Area.

The potential contaminant threats that exist within the Sallal Water Association Wellhead Protection Areas are discussed below. Based on the review of the environmental database, the King County Land-use/Zoning data, inventory of the Wellhead Protection Areas and other information developed for this report, the primary risks to the Association's water supply are anticipated to be from:

- Hazardous Materials (domestic, industrial use and/or improper disposal)
- Industrial / Commercial Activities
- On-site Septic Systems
- Storage Tanks (underground and above-ground)
- Transportation Spills
- Improperly abandoned wells

Hazardous Materials (Domestic Use and Storage)

Although commercial use of chemicals can pose a well documented risk to groundwater; no commercial activities were determined to currently be occurring within the Sallal Water Association Wellhead Protection Areas. However, the use and storage of hazardous materials by domestic landowners can also pose a potential risk to groundwater. The two major pathways for release of chemicals to the environment are accidental spills or improper disposal. The most common method for chemicals to be released is through improper disposal. Given the relative open access to the area and its remoteness, water system personnel should always be observant of any suspected dump sites in the vicinity of Well #3. The Well #1 and #2 area is relatively secure since access to the watershed area is monitored by the City of Seattle.

Most hazardous waste materials are regulated and often the commercial user of the materials is better informed of the proper disposal requirements with required documentation and reporting of the disposal decisions. Small quantities of hazardous materials related to household use are not regulated and improper/illegal disposal of these materials can occur virtually anywhere, especially in rural areas where accessible, undeveloped areas occur. Many compounds and materials used by landowners can contain chemicals that can pose a significant risk to groundwater. In particular, the use of solvents probably poses the greatest potential risk given the nature of solvents to be both miscible and immiscible in water and their ability to potentially migrate over long distances. A large quantity of groundwater can be contaminated with a relatively small quantity of solvent.

Industrial / Commercial Activities

Well #3, because of its location, could become particularly susceptible to future activities that may occur on adjacent parcels of property. The well captures groundwater that infiltrates on Grouse Ridge and flows westward into the Valley Aquifer system. This currently is the most desirable capture direction for the well since the current industrial developed sites are to the west and downgradient of the well. However, the large parcel to the south and parcels directly to the east may be developed with industrial and gravel operations in the future. If a contaminant release occurs in these newly-developed areas, a possibility exists for contaminants to migrate into the well's capture zone. Future development must be made to minimize the possibility of this occurrence.

On-site Septic Systems

On-site septic systems can pose a risk to groundwater sources where septic systems are not properly maintained, where relatively high densities of residential systems occur and where hazardous wastes are discharged to the septic systems. The potential contaminants from septic systems include toxic substances improperly disposed of into the septic system, nitrogen compounds and pathogenic microorganisms. All existing residential units in the Sallal Water Association Well #3 WHPA are on septic systems and all parcels shown on Figure 5-2 have the potential to contain a septic system.

The primary contaminants of concern from properly functioning and maintained septic systems are nitrogen compounds. Nitrogen is converted into a variety of compounds in the environment. It is relatively highly mobile in groundwater where it is transported as nitrates or ammonia. Nitrate can be a constituent of concern in higher concentrations due primarily to its potential toxicity to infants. Nitrate and ammonia are both highly soluble in water and are easily detectable wherever portions of an aquifer are affected by septic system discharges. Septic systems along with farming activities are a source of nitrogen in groundwater throughout King County. The relatively low average density of housing in the vicinity of Well #3 presents a relatively low risk of contamination from this source. There are no residential septic systems within the Well #1 and #2 WHPA.

Storage Tanks (underground and above-ground)

Underground and above-ground storage tanks typically contain petroleum products such as flammable motor fuels or heating oils. Leaking underground storage tanks continue to be a major source of groundwater contamination on a national basis. A comprehensive inventory of potential storage tanks within the Sallal Water Association Wellhead Protection Areas was undertaken to evaluate this potential risk to groundwater source. As previously mentioned an environmental database record as of April 1998 was obtained which contained the Washington State Department of Ecology list of underground storage tanks (USTs) primarily for commercial operations. As previously discussed, USTs and associated contamination occur downgradient of the Sallal Well #3 and are associated with the number of automobile and truck fueling and service operations in this area. Additionally USTs were documented to occur in the community of Cedar Falls and are related to the City of Seattle's Power and Water operation. No storage tanks (USTs) were documented to occur within the Sallal Water Association's Wellhead Protection Areas.

Transportation Spills

Vehicles transporting hazardous materials and petroleum products can be a potential source of groundwater contamination if an accident results in the release of the material to the environment. However, the major arterial roads in the area, i.e. I-90 , state highways, and major county roads do not cross any of the Association's Wellhead Protection Areas. Only a minor local access dirt road passes adjacent to Well #3 and the access to Wells #1 and #2 is through a locked gate. Therefore, transportation spills are judged to be a very low risk to the Association's wells.

Improperly Sealed or Abandoned Wells

Improperly sealed or abandoned wells can provide a conduit from the ground surface to the underlying aquifers. Many of the older wells constructed prior to the more stringent Washington State well construction standards (WAC173-160) have no or very limited surface seals, this can allow contaminants at the wellhead to be transported vertically between the rock/soil and the casing to the underlying aquifer. Even worse, many unused wells that have not been properly abandoned by sealing the entire well are often left uncapped providing a direct route to the underlying aquifer. Additionally many of these wells are forgotten over time and or are further damaged during site construction activities. Decommissioning (properly abandoning) a well generally consists of backfilling the entire well casing with low-permeability grout materials to "seal-off" the well. Decommissioning activities must be performed by a licensed well driller (WAC 173-160). It is in the Association's best interest to ensure that wells no longer used within the Wellhead Protection Areas are properly decommissioned.

Table 5.1

Potential and Actual Contaminant Sources in Sallal Water Association Well #1 and #2 WHPA

This Table references Figure 5-1 for a location within the WHPA

Actual Contaminant Sources in WHPA

six-month Time of Travel Zones	No historical or formerly existing actual sources of contamination were discovered during the inventory of the Sallal Water Association WHPA. Former **Mountain Tree Farm**. This site is a former forestry camp with known sources of petroleum and metal (cadmium and lead) soil contamination. Groundwater contamination has not been detected at the site. The site has been demolished and the contaminated soils have been remediated. The potential for contamination of Sallal Wells #1 and #2 is considered very low.
One-Year Time of Travel Zones	No historical or formerly existing actual sources of contamination were discovered during the inventory of the Sallal Water Association WHPA.
Five-Year Time of Travel Zones	No historical or formerly existing actual sources of contamination were discovered during the inventory of the Sallal Water Association WHPA.
Ten-Year Time of Travel Zones	No historical or formerly existing actual sources of contamination were discovered during the inventory of the Sallal Water Association WHPA. Although no actual contaminants exist within the Well #1 and Well #2 WHPA, known sources are located approximately ½ mile downgradient of the WHPA. One source is related to UST and maintenance activities at the City of Seattle Cedar Falls Facility. A second former site is located along the eastern side of Rattlesnake Lake and consists of a former railroad switchyard and electric train substation. This site has been remediated.

Table 5.1 (continued)

Potential and Actual Contaminant Sources in Sallal Water Association Well #1 and #2 WHPA

This Table references Figure 5-1 for a location within the WHPA

Potential Contaminant Sources in WHPA	
Six-Month Time of Travel Zones	Relatively few potential sources of contamination were observed during the inventory of the six-month time of Travel Zone for Wells #1 and #2. The area is within the City of Seattle Watershed. 1. The one potential source of contamina6tion within the six-month and one-year time of travel zones is Rattlesnake Lake. Rattlesnake Lake's water quality is considered good and management practices have been established by the City of Seattle to protect the lake quality. However, routine sampling of the lake in July 1998 detected an elevated fecal colifom count. Subsequent samplings have not repeated this detection.
One-Year Time of Travel Zones	No other potential sources of contamination were observed during the inventory of the one-year Time of Travel Zone for Wells #1 and #2.
Ten-Year Time of Travel Zones	1. The five and ten-year time of travel zones for the Sallal Wells #1 and #2 would include surface water in the Chester Morse Lake, the upper Cedar River, and the upper reaches of the Cedar River watershed. This portion of the Sallal WHPA for the Wells #1 and #2 is undefined and occurs within the City of Seattle Cedar River Watershed.

Table 5.2
Potential and Actual Contaminant Sources in Sallal Water Association Well #3 WHPA

This Table references Figure 5-2 for a location within the WHPA

Actual Contaminant Sources in WHPA

Six-Month Time of Travel Zones	No historical or formerly existing actual sources of contamination were discovered during the inventory of the Sallal Water Association Well #3 WHPA.
One-Year Time of Travel Zones	No historical or formerly existing actual sources of contamination were discovered during the inventory of the Sallal Water Association Well #3 WHPA.
Five-Year Time of Travel Zones	No historical or formerly existing actual sources of contamination were discovered during the inventory of the Sallal Water Association Well #3 WHPA.
Ten-Year Time of Travel Zones	No historical or formerly existing actual sources of contamination were discovered during the inventory of the Sallal Water Association Well #3 WHPA. Although no actual contaminants exist within the Well #3 WHPA, known sources are located approximately ½ mile downgradient of the WHPA. This source is related to leaking USTs and other activities at the East Seattle Truck Plaza. A gravel borrow pit is also located along the southern boundary of the WHPA.

Table 5.2 (continued)

Potential and Actual Contaminant Sources in Sallal Water Association Well #3 WHPA

This Table references Figure 5-2 for a location within the WHPA

Potential Contaminant Sources in WHPA	
Six-Month Time of Travel Zones	1. **Gravel/Asphalt Operations.** Potentially the highest risk to the Association's Well #3 is posed by development of a gravel and asphalt operation on property within and along the southern boundary of the Sallal Water Association Wellhead Protection Area for Well #3. The proposed operations (in particular settling basins and asphalt operations) should be located within the southern portion of the parcel. Risk associated with the proposed operations and facilities can be dramatically minimized by suitable location of the operations. 2. **Single Family Residence Septic Systems.** These single family homes are located on larger lots (1 to over 5 acres) and are equipped with septic systems. The majority of these homes are of more recent construction with engineered septic systems that should function well with proper maintenance. Most residential building and grounds maintenance utilizes limited quantities of chemicals, fertilizers, etc.
One-Year Time of Travel Zones	1. **Gravel/Asphalt Operations.** Potentially the highest risk to the Association's Well #3 is posed by development of a gravel and asphalt operation on property within and along the southern boundary of the Sallal Water Association Wellhead Protection Area for Well #3. 2. **Single Family Residence Septic Systems.** These single family homes are located on larger lots (1 to over 5 acres) and are equipped with septic systems. The majority of these homes are of more recent construction with engineered septic systems that should function well with proper maintenance. Most residential building and grounds maintenance utilizes limited quantities of chemicals, fertilizers, etc. 3. **Forestry Practices. Weyerhaeuser** currently manages the Grouse Ridge area as a tree farm and uses herbicides to control deciduous tree growth in certain areas. Treated sewage sludge has also been used as fertilizer to promote tree growth.

Table 5.2 (continued)
Potential and Actual Contaminant Sources in Sallal Water Association Well #3 WHPA

This Table references Figure 5-2 for a location within the WHPA

Five-Year Time of Travel Zones	A significant portion of the land-surface is covered with native vegetation on steeper slopes of Grouse Ridge. Potential contaminant sources observed within the five-year WHPA zone for Well #3 include: 1. **Gravel/Asphalt Operations**. Potentially the highest risk to the Association's Well #3 is posed by development of a gravel and asphalt operation on property within and along the southern boundary of the Sallal Water Association Wellhead Protection Area for Well #3. 2. **Single Family Residence Septic Systems**. These single family homes are located on larger lots (1 to over 5 acres) and are equipped with septic systems. The majority of these homes are of more recent construction with engineered septic systems that should function well with proper maintenance. Most residential building and grounds maintenance utilizes limited quantities of chemicals, fertilizers, etc. 3. **Forestry Practices. Weyerhaeuser** currently manages the Grouse Ridge area as a tree farm and uses herbicides to control deciduous tree growth in certain areas. Treated sewage sludge has also been used as fertilizer to promote tree growth.
Ten-Year Time of Travel Zones	Only a portion of the ten-year time of travel zone for Well #3 exists on Grouse Ridge, where a minor groundwater divide between the Middle and South Forks of the Snoqualmie River occurs. The remainder of the ten-year time of travel zone is either infiltrating groundwater or future precipitation. There were no potential sources observed within the ten-year time of travel zones for Well #3. The area is undeveloped with the majority of the land-surface covered with native vegetation on the very steep slopes of Grouse Ridge.

Table 5.3

Potential Contaminant Sources Listed by Type

CATEGORY I-Sources designed to discharge substances

Subsurface percolation
- (e.g., septic tanks and cesspools)

Injection Wells
- Hazardous waste
- Non-hazardous waste (e.g. brine disposal and drainage)
- Non-waste (e.g., enhanced recovery, artificial recharge, solution milling, and in-situ mining)

Land application
- Waste water (e.g., spray irrigation)
- Wastewater by-products (e.g., sludge)
- Hazardous waste
- Non-hazardous waste

CATEGORY II-Sources designed to store, treat and/or dispose of substances:

Discharge through unplanned release

Landfills

Industrial hazardous waste

Industrial non-hazardous waste

Municipal sanitary

Open dumps, including illegal dumping (waste)

Residential (or local) disposal

Surface Impoundments
- Hazardous waste
- Non-hazardous waste

Waste tailings

Waste piles
- Hazardous waste
- Non hazardous waste
- Materials stockpiles (non-waste)

Graveyards

Animal burial

Above ground Storage Tanks
- Hazardous waste
- Non-hazardous waste
- Non-waste

Underground storage tanks
- Hazardous waste
- Non-hazardous waste
- Non-waste

Containers
- Hazardous waste
- Non-hazardous waste
- Non-waste

Open burning sites

Detonation sites

Radioactive disposal sites

CATEGORY III-Sources designed to retain substances during transport or transmission

Pipelines
- Hazardous waste
- Non-hazardous waste
- Non-waste

Materials transport and transfer operations
- Hazardous waste
- Non-hazardous waste
- Non-waste

CATEGORY IV-Sources discharging substances as a consequence of other planned activities

Irrigation practices (e.g. return flow)

Pesticide Applications

Fertilizer applications

Animal feeding operations

De-icing salts applications

Urban run-off

Percolation of atmospheric pollutants

Mining and mine drainage
- Surface mine related
- Underground mine related

CATEGORY V-Sources providing conduit or inducing discharge through altered flow patterns

Production Wells

Oil (and gas) wells

Geothermal and heat recovery wells

Water supply wells

Other wells (non–waste)
- Monitoring wells
- Exploration wells

Construction excavation

Improperly abandoned wells

CATEGORY VI-Naturally occurring sources whose discharge is created and/or exacerbated by human activity

Ground water- surface water interactions

Natural leaching

Saltwater intrusion / brackish water upconing (or intrusion of other poor quality natural water)

Source: Adapted from: United States Environmental Protection Agency. 1989, *Wellhead Protection Programs: Tools for Local Governments.*
EPA 440/6-89-002

Table 5.4

Potential Contaminant Sources Listed Alphabetically

- **Above ground storage tanks**
  - Hazardous and non-hazardous waste treatment
  - Hazardous and non-hazardous waste storage
  - Hazardous and non-hazardous material storage
- **Animal feedlots**
- **Containers**
  - Hazardous and non-hazardous waste storage
  - Hazardous arid non-hazardous material storage
- **Deep injection wells**
  - Wastewater disposal wells
  - Oil and gas activity disposal wells
  - Mineral extraction disposal wells
- **De-icing salts storage piles**
- **Fertilizer applications**
- **Graveyards**
- **Ground water / surface water cross contamination**
- **Irrigation practices (return flow)**
- **Land application**
  - Wastewater application (spray irrigation)
  - Wastewater by-product (sludge) application
  - Petroleum refining waste application
  - Hazardous and non -hazardous waste application
- **Landfills**
  - Industrial hazardous / non-hazardous landfill
  - Municipal Sanitary Landfill
  - Demolition Landfill
- **Materials transfer operations**
  - Hazardous and non-hazardous waste transfers
  - Hazardous and non-hazardous material transfers
- **Materials stockpiles**
  - Hazardous and non-hazardous material
- **Mining and mine drainage**
- **Natural leaching**
- **Open dumps**
- **Pesticide applications**
- **Pipelines**
  - Hazardous and non-hazardous waste storage
  - Hazardous and non-hazardous material storage
- **Radioactive disposal sites**
- **Salt water intrusion**
- **Septic tanks**
  - Houses
  - Apartments
  - Small businesses
- **Shallow injection wells**
  - Agricultural drainage wells
  - Automobile service station disposal wells
  - Industrial process water disposal wells
- **Storm water drainage wells**
- **Surface impoundments**
  - Hazardous and non-hazardous waste cesspools, ponds lagoons, and other impoundments
- **Transportation of materials**
  - Hazardous and non-hazardous waste
  - Hazardous and non-hazardous material
- **Underground storage tanks**
  - Hazardous and non-hazardous waste treatment
  - Hazardous and non-hazardous waste storage
  - Hazardous and non-hazardous material storage
- **Urban runoff**
- **Waste piles**
  - Hazardous and non-hazardous waste piles
- **Waste tailings**
  - Heap leaching piles
  - Non-heap leaching piles

Source: United States EPA. 1991.

Guide for Conducting Contaminant Source Inventories for Public Drinking Water Supplies.

Table 5.5
Quantities And Types Of Chemicals Typically Used, Stored, Or Transferred By Land Use Activities

Large Amounts of Chemicals	
Industrial Activities:	*Chemical Categories:*
Chemical manufacturing; electronics; petroleum refining and storage; metal treating; food, wood, and pulp processing; textile manufacturing; warehousing	Organic solvents; petroleum: other organics
Commercial Activities	
Gas stations; furniture strippers; drum cleaning	Petroleum; organics
Moderate Amounts of Chemicals	
Commercial Activities:	*Chemical Categories:*
Dry cleaners; junk yards; auto repair and body shops; pest controllers; photographic processing; machine shops; auto parts stores; lawn and garden/farm stores; paint stores; hardware stores; medical facilities	Organic solvents; petroleum; pesticides metals; nitrates; other organics
Agricultural Activities:	
Heavy chemical use agricultural (fruits and vegetables)	Nitrates
Residential Activities:	
Urban housing; high density (greater than 2 dwelling units per acre) using septic systems	Nitrates; pesticides; petroleum; organics
Small Amounts of Chemicals	
Commercial Activities:	*Chemical Categories:*
Grocery stores; department stores; office buildings; laundromats; food service; shoe repair; barber and beauty shops	Organics; Petroleum
Agricultural Activities:	
Low chemical use agriculture (forage crops)	Nitrates
Residential Activities:	
Moderate to low density (less than 2 dwelling units per acre) using septic systems	Nitrates; petroleum; pesticides; organics

Underlying the wellhead protection program objectives is the concept of reducing or eliminating the risk to groundwater posed by various land use activities. Such risk is usually a function of these factors:

- The types and amounts of chemicals/waste used, stored, discharged or transferred at the site;
- The safeguards used to minimize contamination potential; and
- The location of the site relative to sensitive aquifer areas, tributary land areas and tributary surface water bodies.

Source: United States EPA. 1991. *Guide for Conducting Contaminant Source Inventories for Public Drinking Water Supplies.*

6 MANAGEMENT STRATEGY

6.1 Residential Areas

Private residences comprise the largest percentage of land use within all of the Wellhead Protection Areas within the Sallal Water Association franchise. Residential use presents a moderate risk of contamination to the aquifer in use, provided that homeowners take reasonable care in the use and disposal of household chemicals, and maintain private septic systems in good working order.

The primary management activity of the Association with respect to residential use within the Wellhead Protection Areas is educational. Residences within each of the Wellhead Protection Areas have been notified of their inclusion within the Area by mail. A copy of the notification letter is included in Appendix D. The notification letter is accompanied by a map showing the limits of the Wellhead Protection Area, as well as a brochure that describes the nature of groundwater, typical sources and modes of contamination, and how to prevent groundwater contamination. A list of persons notified of their location within the Wellhead Protection Area is provided in Appendix D.

Recommended Management Strategies:

1. Programs to inform and educate landowners that their property is within a Wellhead Protection Area. This is simply a program to encourage individuals to use less chemicals (fertilizers and pesticides) on their lawns and to be mindful that their property is located over a section of the aquifer that is used for drinking water.

2. Provide information about not dumping chemicals and how to properly dispose of chemical, paints, fuels and other materials that homeowners may use. Water systems should cooperate, work with and promote programs like the hazardous waste pickup programs that rotate hazardous waste collection points throughout the communities and other programs like local garages that take spent oil and antifreeze for recycling. The Sallal Water Association should help get the information about these services out to its members.

3. A general recommendation would be to develop an information packet that can be sent to new customers to inform them of general water conservation, wellhead protection information, Association emergency contacts, etc. This can be kept to a small informational brochure and targeted at those living only in the WHPAs but some benefit is derived by sending it to all new members.

4. The Association should consider the purchase of commercially available "Wellhead Protection Area" signs (Evergreen Rural Water Association, 2ft x 2ft, reflective, $30.00 each) that could be posted near Well #3 to inform

residents of the WHPA. These signs are a low cost perpetual reminder of the Wellhead Protection Areas in their vicinity.

6.1.1 Septic Systems

Primarily due to the dearth of other potential sources, septic systems have been identified as a potential source of contamination among residential areas within the Wellhead Protection Area. Under ordinary conditions, septic tanks pose a relatively small risk to groundwater. Potential risks of contamination increase if hazardous materials are discarded through a septic system, if the septic system itself fails, or if conduits like old improperly abandoned wells are adjacent to septic systems, providing a potential mechanism for untreated wastewater to reach deeper aquifer systems.

Under WAC 246-272-155501, between January 1, 1995 and January 1, 2001, all local health departments (King County) in Washington State are required to develop and implement an on-site sewage system operation and maintenance program. The Sallal Water Association should participate and request information from the King County Health Department to infrequently monitor the condition of septic systems within their WHPAs.

Recommended Management Strategies:

1. As part of the educational outreach program described above, a flyer was distributed to all parcel owners within the Sallal Wellhead Protection Areas (WHPAs). The brochure discusses the Wellhead Protection Program and outlines the need for care in the use and maintenance of septic systems. The Association should distribute a copy of this brochure to all new customers who purchase or construct homes within the WHPA. This brochure along with a map of the WHPA should probably be included along with the other water conservation and information packets provided to all new customers.

2. The Sallal Water Association should consider making septic tank education part of an on-going program by incorporating educational articles and information in the periodic newsletters that are distributed to the customers of the Association. Alternatively, specific septic tank information pamphlets including those developed by the King County Health Department could be distributed on a periodic basis to Association customers.

6.2 Commercial & Industrial Areas

Commercial and/or industrial operations within the Wellhead Protection Area pose, in general, a greater hazard to aquifers than residential use. Depending on the type of business, releases of hazardous chemicals can result from misuse, improper storage, improper disposal, equipment failure, or other mechanisms. Industrial releases are also likely to involve greater volumes than releases from residential sources.

All businesses operating in or near the Wellhead Protection Area will be notified by mail of their status with respect to the area boundaries. A sample letter and the map showing the location of the Sallal Well #3 WHPA is provided in Appendix E. A brochure will also be attached that explains the nature of groundwater usage and the potential threats to drinking water aquifers. A list of the businesses notified as part of this outreach program is provided in Appendix E.

Recommended Management Strategies:

1. As part of the state Wellhead Protection Program, potential sources of contamination have to be notified of their position relative to the Association's Wellhead Protection Areas and their notification documented in the WHPP. A specific notification letter (Appendix E) will be sent to each commercial business within the Sallal Water Association's WHPAs. The Association will have to monitor and update the Wellhead Protection Plan at a frequency of about every two years - adding new businesses. (This activity is usually tied in with an overall re-inventory and evaluation of the land use in the WHPAs that is required by the States Wellhead Protection Program.)

2. The informational flyer sent to the residences in the WHPA should be sent to the business owners within the Sallal Water Association's Wellhead Protection Areas (WHPAs). The brochure discusses the Wellhead Protection Program and outlines the need for care in the use and maintenance of septic systems.

3. The Sallal Water Association should take a proactive position of informing potential developers within or adjacent to the Association's WHPA and working with the developers to minimize the potential impacts to well # 3. Often relocating certain storage or parts of an operation can dramatically reduce the likelihood of contamination reaching the well.

6.3 Emergency Services

Another important aspect of the Association's management plan is coordination with local emergency services personnel. Local fire, police, and other regulatory authorities and agencies were notified of the existence and location of the Wellhead Protection Area boundaries as part of the management plan. The notification included distribution of a letter (provided in Appendix E) that details the potential risks associated with release of hazardous materials within the Wellhead Protection Area and the recommended procedures (containment and recovery) to mitigate an accidental release. This management procedure is also discussed in Section 7.2, under contingency planning.

Recommended Management Strategies:

1. A letter and copies of the Wellhead Protection Area Maps will be distributed to all the Local Emergency Response Groups and Agencies listed in

Appendix E. Examples of the letter and maps sent to the emergency groups are also provided in Appendix E.

2. Emergency response groups should be met with either directly or through a telephone conference to inform them of the Association's WHPA and review their emergency spill response plan for these areas.

3. The Association may want to consider a "Wellhead Protection Area" signs (Evergreen Rural Water Association, 2ft x 2ft, reflective, $30.00 each) that could be posted in the immediate area of Well #3. These signs serve as a great reminder to the Emergency Service Personnel that there is a Wellhead Protection Areas in their vicinity.

7 CONTINGENCY PLANNING

7.1 Contingency Plan for Alternative Supply

What happens when a well or multiple wells is contaminated and cannot be used as a drinking water source? Most of the Association's water production is from Wells #1 and #2 in the Rattlesnake Lake area and the relatively short distance and a contamination event could possibly affect both wells. The likelihood of these wells becoming contaminated is probably remote since they are located within a controlled access watershed. However, for a quick exercise of the system's ability to react to a contaminant release, Wells #1 and #2 were selected. The wells are also located at a fairly high elevation within the watershed. It is this source height that also makes the loss of Wells #1 and #2 particularly troublesome from an operational standpoint.

In 1997, the Sallal Water Association Production Wells #1 and #2 produced approximately 63.2 and 65.6 million gallons of water, respectively, for a combined total production of 128.8 million gallons of water from the Rattlesnake Lake area. This amounts to approximately 89% of the total production of the Sallal Water Association during 1997. In the event Wells #1 and #2 were contaminated, production from these wells would immediately be terminated and the remaining well (#3) in the system would be brought on line at a higher capacity to meet the demand. An existing intertie with the community of North Bend would be activated under an emergency agreement with the City. This would be sufficient to provide water supplies to approximately 65% or more of the Sallal Water Association's members (everyone below the South Fork of the Snoqualmie River) and could be activated in a relatively quick time period of hours to at most a day or two.

The Sallal Water Association would immediately have to notify approximately 30% of its members (Wilderness Rim) living at an elevation higher than the Riverbend development to take actions to secure temporary water supplies. Emergency water trucks could be utilized in some of the communities. Getting water to these higher elevations in the system will be difficult because the Sallal Water Association does not have any sources or tanks above this hydraulic head and delivery of water to customers above that hydrostatic level will be difficult and require some system modifications.

Alternate sources of water would have to be obtained and put on line in a relatively short order to not have a significant impact to existing Sallal members at higher elevations. There appear to be two alternatives to developing a Contingency Plan that would have procedures and capabilities in place to work around the disruption of these production wells.

The first one would be to reestablish the working relationship and agreement with the City of Seattle that existed previously when the Sallal Water Association obtained their water from the City. Significant cost savings could be realized if some of the existing old piping and system from when the Sallal Water Association was intertied could be put into working order for emergencies. Apparently the old Sallal system fed directly out of taps into the penstocks. Developing a system that would utilize water from the City of Seattle Cedar Falls facility (either from the penstocks or from their onsite well) would help to provide emergency water. There would appear to be a significant enough benefit to both the Sallal Water and Wilderness Rim Association systems to warrant further investigation.

The second course of action is to move toward obtaining additional sources of water, likely another well, to supplement and potentially augment water produced by Wells #1 and #2. The preferable location to place this well would be at a relatively high position approximately at the same elevation as the existing wells. Either a location across the valley on the other side of the Association's service area or another well installed within the Watershed could be suitable. If an additional well is installed within the watershed boundary either as a new source or as a replacement for an existing well, the well should not be sited in close proximity to the existing wells. Distance between the wells further reduces the very low possibility of a single contamination event impacting multiple wells. The Sallal Water Association also has sufficient funds to immediately undertake the emergency construction of a replacement well within the watershed boundary if one of the wells becomes inoperative. The Sallal Water Association should probably have at least a memo of understanding with the City of Seattle that allows the Association to maintain water production form wells within the City's watershed boundary. This prior agreement would help to expedite the Association's ability to seek replacement water sources in case of emergency.

7.2 Future Groundwater Demand

The Sallal Water Association, like most expanding water service providers with a chartered service area, will need to obtain additional sources of water to meet the demands of members as the area becomes more developed. The Association area now contains a mix of land parcels from single acre to 40+ acre tracts that will likely be developed in the. Total future build-out in the Sallal service area (based on existing parcels and estimated additional future parcels based on current zoning) is estimated at approximately 3,000 connections. The association is currently at approximately 1200 connections or approximately 40% toward build-out within the Sallal Water Association service area.

Based on historical consumption and an anticipated rate of growth for the area, the Sallal Water Association needs additional water rights now and will require additional sources of water beginning in the early part of the next decade to meet peak demands during the summer months. Future sources of water will most likely come from additional water rights on new production wells added to the system. The Association is currently evaluating (and has evaluated in the past) other water source alternatives such as interties with water systems that could export some of their water to the Association. The difficulty in securing water rights through the Washington Department of Ecology in recent years, has resulted in most East King County water systems needing additional water rights for their own anticipated future demand with very few having the ability to export groundwater to intertied adjacent systems. Coalitions of East King County Water Systems or even broader, multi-county coalitions may form a basis for future distribution of the water resources in this region.

The Sallal Water Association will soon update their Comprehensive Plan for the Sallal Water System and a more comprehensive evaluation of anticipated water right and source requirements will be conducted as part of that Plan.

However, in the short-term, the Sallal Water Association should aggressively pursue obtaining additional water rights to meet the future demands of its members. The existing WHPAs and the community educational outreach program both serve to protect the groundwater resources for future appropriation. Additional anticipated sites of groundwater appropriation should be added to the Associations WHPAs , as necessary. It is anticipated that the alternative if the Sallal Water Association is unable to secure additional water rights, will be the proliferation of additional private wells as the larger lots are developed. The Sallal Water Association's Service Area will be developed; it is simply a matter of whether there is managed utilization and protection of the groundwater resource or relatively uncontrolled private access.

The Sallal Water Association Board of Directors should consider implementing a policy to reevaluate system growth and anticipated future water demand on a yearly basis.

7.3 Emergency Spill/Incident Response Coordination

A current list of emergency contacts and telephone numbers is maintained by the Sallal Water Association Water System operator. In addition, the Association has agreements with various contractors including excavation, construction and electrical to provide rapid response to the Association in the event of a crisis. The Association maintains a 24-hour voice mail on their phone with after hours/emergency phone numbers listed.

7.4 Concluding Remarks

The Sallal Water Association's Board of Directors, its operational and management staff are dedicated to providing the highest quality drinking water possible to the members of the Association. As discussed in this document, the Sallal Water Association's Wellhead Protection Area for its major production Wells (#1 and #2) is relatively free of potential contaminant sources, with no anticipated future industrial or commercial activities. The Associations Well #3 WHPA will require some monitoring and management to ensure that the groundwater resources remain usable to the Association. This Wellhead Protection Plan for the Sallal Water Association was prepared to serve the interests of the Association members by protecting their groundwater resources at a minimal cost to the members while maintaining compliance with the federal

Safe Drinking Water Act and the Washington State Department of Health (DOH) regulations.

8 REFERENCES

Booth, D. B.,1990. Surficial Geologic Map of the Skykomish and Snoqualmie Rivers Area, Snohomish and King Counties, Washington, U. S. Geological Survey, Misc. Investigations Series Map I-1745

King County, 1997. King County Geographic Information including parcel, zoning

Fitts, C.,1995. TWODAN Manual, Scarbourough, Maine. Charle.fitts @inforail.com

Golder Associates, 1997. Hydrogeologic Studies of the Snoqualmie River Valley Area.

Turney, G.L., C. Kahle, and N. P. Dion, 1995. Geohydrology and Ground-water Quality of East King County, Washington, U. S. Geological Survey, Water Resource Investigations Report 94-4082

Vista, 1998. Environmental Geographics Data for GIS, A comprehensive search of government environmentally related databases for King County, Washington, April 1998, Vista Information Solutions, Inc. San Diego, California, www.vistainfo.com

Washington State Department of Health, April 1995, *Wellhead Protection Program Guidance Document*, DOH Publication #331-018

Washington State Department of Health, December 1993. *Inventory of potential Contaminant Sources in Washington's Wellhead Protection Areas*, DOH Publication

Personal Communications

Heintz, Richard. Sallal Water Association consulting Engineer, 1998

Lilejord, Renny, Satellite Management Services, Inc. Sallal Water Association System Operator, 1998

ATTACHMENT A

Boring Log and Construction Data for Well TW-1

ATTACHMENT A

Geologic Log

961(USGS)

Ground Surface Elevation in Feet 955 (CLD)

(Loose), wet, light brown, sandy GRAVEL with numerous cobble.

boulder with cobble

Sandy GRAVEL

boulder

(Loose), moist, light grayish-brown, slightly silty, sandy GRAVEL with cobble.

Well #1

(Loose), wet to saturated, light gray, gravelly COBBLE to cobbly GRAVEL.

Jeff Wagner

(Loose), saturated, light brown, sandy GRAVEL with scattered cobble.

numerous cobble

Water Airlifted in GPM

25-50

50-100

50-100

Well Design

Top Casing Elevation in Feet 957.68 (CLD)
Casing Stickup in Feet 2.5

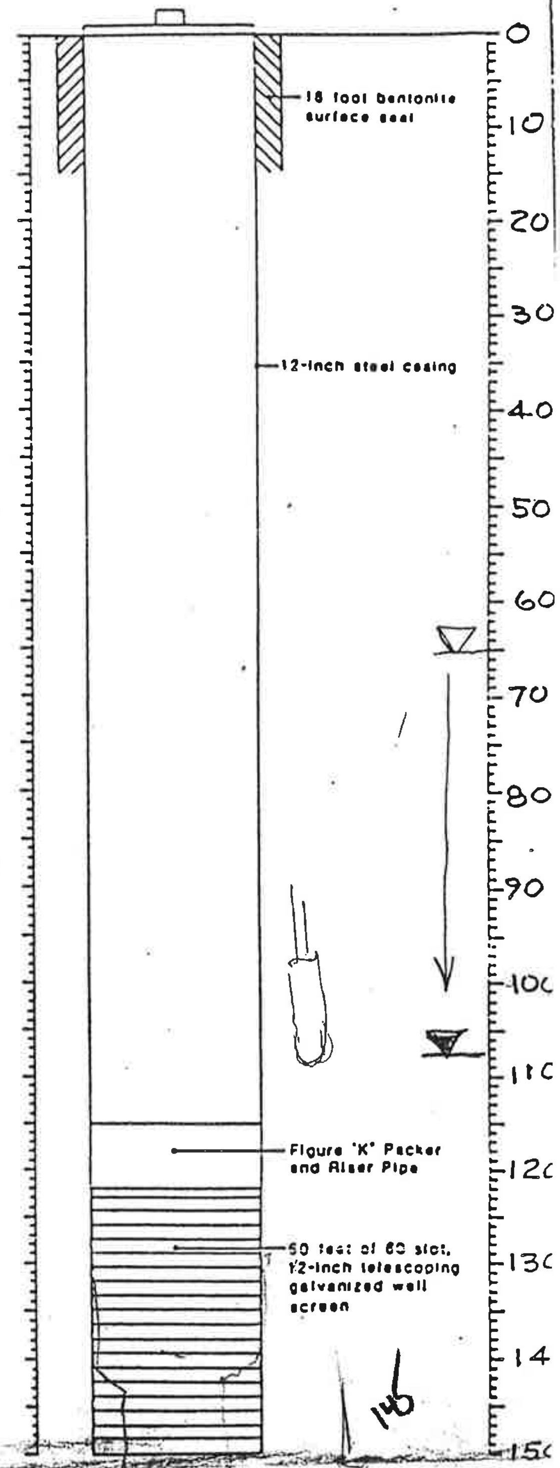

1. Soil descriptions are interpretive and actual changes may be gradual.
2. Water level ▽ is for date indicated and may vary with time of year.
ATD: At Time of Drilling

J-1130 July 1983
HART-CROWSER & associates, inc.
Sheet 1 of 3 Figure A-4

206-324-9530

ATTACHMENT A

Boring Log and Construction Data for Well TW-1

ATTACHMENT A

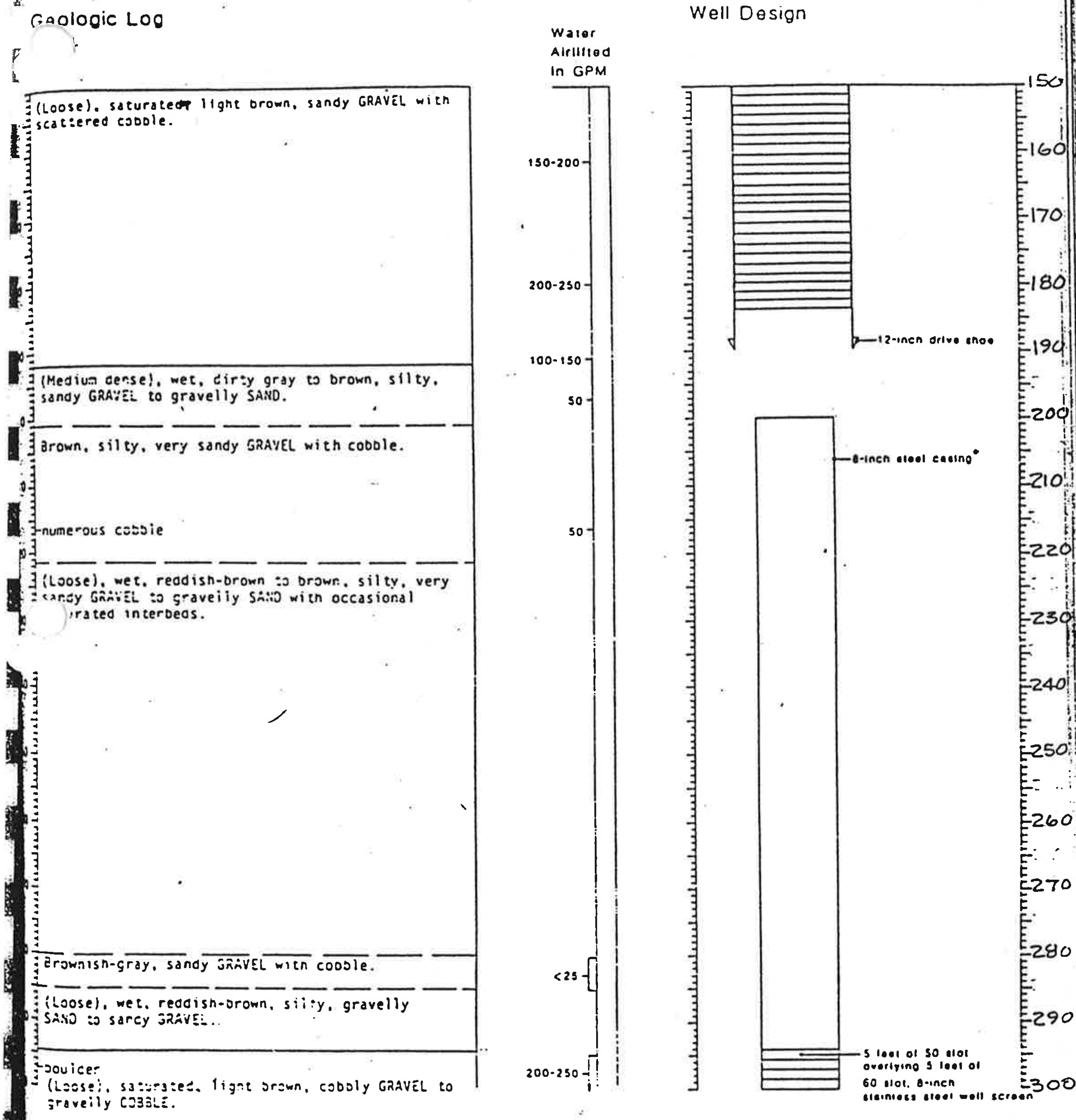

(Loose), saturated, light brown, sandy GRAVEL with scattered cobble.

(Medium dense), wet, dirty gray to brown, silty, sandy GRAVEL to gravelly SAND.

Brown, silty, very sandy GRAVEL with cobble.

-numerous cobble

(Loose), wet, reddish-brown to brown, silty, very sandy GRAVEL to gravelly SAND with occasional ·rated interbeds.

Brownish-gray, sandy GRAVEL with cobble.

(Loose), wet, reddish-brown, silty, gravelly SAND to sandy GRAVEL.

-boulder

(Loose), saturated, light brown, cobbly GRAVEL to gravelly COBBLE.

* 8-inch steel casing and screen assembly were abandoned when the 8-inch casing section separated from the upper 12-inch screen assembly.

ES 1. Soil descriptions are interpretive and actual changes may be gradual.

2 Water Level ‗ is for date indicated and may vary with time of year

ATD At Time of Drilling

J-1130 July 1983

HART-CROWSER & associates, inc.

Sheet 2 of 3 Figure A-4

Boring Log and Construction Data for

ATTACHMENT A

Geologic Log

(Loose), saturated, light brown, cobbly GRAVEL to gravelly COBBLE.

(Loose), saturated, dark gray, silty fine SAND.

-grades into blueish-gray, slightly clayey, silty fine SAND with scattered gravel.

(Hard), brown, fine grain rock (ARGILLITE).

Bottom of Boring at 343.6 Feet.
Completed 12/17/83.

Well Design

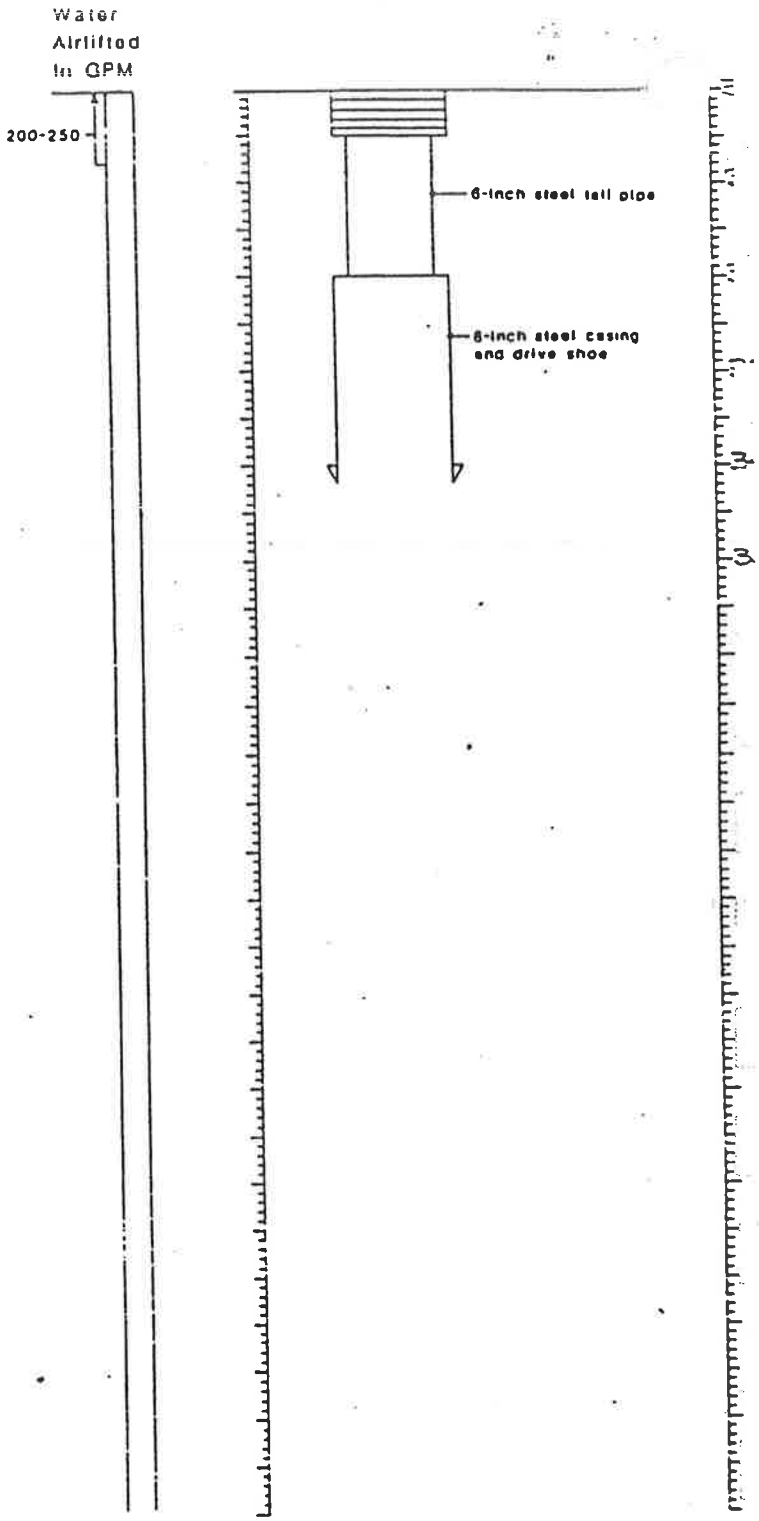

ES. 1. Soil descriptions are interpretive and actual changes may be gradual.
2. Water Level ▽ is for date indicated and may vary with time of year.
ATD: At Time of Drilling

J-1130 July
HART-CROWSER & associates, inc.
Sheet 3 of 3 Figure A-4

ginal and First Copy with
nent of Ecology
Copy — Owner's Copy
Copy — Driller's Copy

WATER WELL REPORT
STATE OF WASHINGTON

FILE COPY

ATTACHMENT A

Application No. ....

Permit No. ....

WNER: Name City of Seattle Address ....

ATION OF WELL: County King NW ¼ NE ¼ Sec 34 T 23 N., R 8E W.M.

d distance from section or subdivision corner

ROPOSED USE: Domestic ☐ Industrial ☐ Municipal ☒ Irrigation ☐ Test Well ☐ Other ☐

YPE OF WORK: Owner's number of well (if more than one) PW-1

New well ☒ Deepened ☐ Reconditioned ☐

Method: Dug Bored ☐ Cable ☒ Driven ☐ Rotary ☐ Jetted ☐

IMENSIONS: Diameter of well 16 X 12 inches.

Drilled 197 ft. Depth of completed well 163 ft.

ONSTRUCTION DETAILS:

Casing installed: 16" Diam. from 0 ft. to 152 ft.

Threaded ☐ 12" Diam. from 152 ft. to 197 ft.

Welded ☒ ....” Diam. from .... ft. to .... ft.

erforations: Yes ☐ No ☒

Type of perforator used ....

SIZE of perforations .... in. by .... in.

.... perforations from .... ft. to .... ft.

.... perforations from .... ft. to .... ft.

.... perforations from .... ft. to .... ft.

creens: Yes ☒ No ☐

Manufacturer's Name Johnson

Type Stainkss Steel Model No. ....

Diam. 10" Slot size 300 from 154 ft. to 163 ft.

Diam. .... Slot size .... from .... ft. to .... ft.

G vel packed: Yes ☐ No ☒ Size of gravel: ....

Gravel placed from .... ft. to .... ft.

Surface seal: Yes ☒ No ☐ To what depth? 18 ft.

Material used in seal Cement

Did any strata contain unusable water? Yes ☐ No ☒

Type of water? .... Depth of strata ....

Method of sealing strata off ....

UMP: Manufacturer's Name ....

Type: .... H.P. ....

WATER LEVELS: Land-surface elevation above mean sea level.... ~914.5 ft.

level 37.24 ft. below top of well Date 10/30/85

an pressure .... lbs. per square inch Date ....

Artesian water is controlled by .... (Cap, valve, etc.)

WELL TESTS: Drawdown is amount water level is lowered below static level

a pump test made? Yes ☒ No ☐ If yes, by whom? Converse Consultants

d: 1,000 gal./min. with 50 ft. drawdown after 24 hrs.

(See Attached) " "

" " "

overy data (time taken as zero when pump turned off) (water level measured from well top to water level)

e	Water Level	Time	Water Level	Time	Water Level
[illegible]	38.90	20	37.93	90.25	37.66
5	38.25	32.5	37.82	127.75	37.68
13	38.00	50	37.72	153	37.65

ate test 10/31/85

er test .... gal./min. with .... ft. drawdown after .... hrs.

esian flow .... g.p.m. Date ....

erature of water 9°C Was a chemical analysis made? Yes ☒ No ☐

(10) WELL LOG:

Formation: Describe by color, character, size of material and structure, and show thickness of aquifers and the kind and nature of the material in each stratum penetrated, with at least one entry for each change of formation.

MATERIAL	FROM	TO
Brown Sand, Gravel & Boulders	0	18
Brown Gravelly Till	18	39
Brown Sand, Gravel Some Water	39	50
(Formation Is layered Sand, gravel & Till)		
Brown Till Sand & Gravel	50	75
Grey Blue Till	75	88
Sand & Gravel - Loose	88	96
Grey Till	96	106
Sand & Gravel	106	115
Clay bound Till Layered Sand & gravel	115	121
Some gravel with Till	121	138
Sand & Gravel	138	145
Sand Gravel & Till	145	151
Till	151	154
Sand & Gravel & Water	154	163
Gravelly Till	163	197

WELL 2

Work started Sept 19 85 Completed Oct 19 85

WELL DRILLER'S STATEMENT:

This well was drilled under my jurisdiction and this report is true to the best of my knowledge and belief.

NAME Burt Well Drilling, Inc.
(Person, firm, or corporation) (Type or print)

Address 19282 N.E. Lincoln Rd.
Poulsbo, Wa. 983

[Signed] George D. Burt
(Well Driller)

License No. 0048 Date Nov 19 85

(USE ADDITIONAL SHEETS IF NECESSARY)

50-1-20

ile Original and First Copy with
epartment of Ecology
econd Copy — Owner's Copy
hird Copy — Driller's Copy

FILE COPY

WATER WELL REPORT

STATE OF WASHINGTON

Received
1517

ATTACHMENT A

Permit No. ...

(1) OWNER: Name Sallal Water Association Address North Bend

(2) LOCATION OF WELL: County KING — SE ¼ SW¼ Sec 18 T.23 N., R. 9

g and distance from section or subdivision corner

(3) PROPOSED USE: Domestic ☐ Industrial ☐ Municipal ☐ Irrigation ☐ Test Well ☐ Other ☐

(4) TYPE OF WORK: Owner's number of well (if more than one) ....

New well ☒ Method: Dug ☐ Bored ☐
Deepened ☐ Cable ☒ Driven ☐
Reconditioned ☐ Rotary ☐ Jetted ☐

(5) DIMENSIONS: Diameter of well .... inches.
Drilled .... ft. Depth of completed well .... ft.

(6) CONSTRUCTION DETAILS:

Casing installed: 8" Diam. from 0 ft. to 255 ft.
Threaded ☐ ...." Diam. from .... ft. to .... ft.
Welded ☐ ...." Diam. from .... ft. to .... ft.

Perforations: Yes ☐ No ☒
Type of perforator used ....
SIZE of perforations .... in. by .... in.
.... perforations from .... ft. to .... ft.
.... perforations from .... ft. to .... ft.
.... perforations from .... ft. to .... ft.

Screens: Yes ☒ No ☐
Manufacturer's Name JOHNSON
Type 304 stainless Model No. ....
Diam. 8" Slot size 14 from 248 ft. to 238 ft.
Diam. .... Slot size .... from .... ft. to .... ft.

Gravel packed: Yes ☐ No ☒ Size of gravel: ....
Gravel placed from .... ft. to .... ft.

Surface seal: Yes ☒ No ☐ To what depth? 18 ft.
Material used in seal grout
Did any strata contain unusable water? Yes ☐ No ☐
Type of water? .... Depth of strata ....
Method of sealing strata off ....

(7) PUMP: Manufacturer's Name ....
Type: .... H.P. ....

(8) WATER LEVELS: Land-surface elevation above mean sea level .... ft.
Static level 200' ft. below top of well Date ....
Artesian pressure .... lbs. per square inch Date ....
Artesian water is controlled by .... (Cap, valve, etc.)

(9) WELL TESTS: Drawdown is amount water level is lowered below static level
Was a pump test made? Yes ☐ No ☐ If yes, by whom? ....
Yield: 91 gal./min. with 12 ft. drawdown after 5 hrs.
" " " "
" " " "

Recovery data (time taken as zero when pump turned off) (water level measured from well top to water level)

Time	Water Level	Time	Water Level	Time	Water Level

Date of test ....
Bailer test .... gal./min. with .... ft. drawdown after .... hrs.
Artesian flow .... g.p.m. Date ....
Temperature of water .... Was a chemical analysis made? Yes ☐ No ☐

(10) WELL LOG:

Formation: *Describe by color, character, size of material and structure, and show thickness of aquifers and the kind and nature of the material in each stratum penetrated, with at least one entry for each change of formation.*

MATERIAL	FROM	TO
TOPSOIL COBBLES BOULDERS	0	10
SILTY SAND AND GRAVEL COBBLES and BOULDERS	10	202
SILT BOUND SAND AND GRAVEL	202	212
SAND AND GRAVEL WATER	212	215
SILTY SAND AND GRAVEL	215	217
SAND AND GRAVEL WATER	217	219
SILT BOUND SAND AND GRAVEL	219	228
SAND AND GRAVEL WATER BEARING LAYERED WITH SILT	228	241
SILTY SAND AND GRAVEL COBBLES BOULDERS	241	255

WELL 3

Work started 8/24, 1987. Completed 9/25, 1987.

WELL DRILLER'S STATEMENT:

This well was drilled under my jurisdiction and this report is true to the best of my knowledge and belief.

NAME HOLT DRILLING, INC.
(Person, firm, or corporation) (Type or print)

Address 10621 Todd Rd. E

[Signed] ....
(Well Driller)

License No. 1094 Date 9/28/, 1987

3 SALLAL Well

W/ 4971

REVISED **

WATER WELL REPORT

STATE OF WASHINGTON

Stai. Card No. ATTACHMENT A W066049
Water Right Permit No.

(1) OWNER: Name SALLAL WATER DISTRICT Address PO BOX 378 NORTH BEND, WA 98045-

(2) LOCATION OF WELL: County KING - NW 1/4 NW 1/4 Sec 19 T 23 N., R 9E WM
STREET ADDRESS OF WELL (or nearest address)

(3) PROPOSED USE: DOMESTIC

(4) TYPE OF WORK: NEW WELL
Owner's Number of well (If more than one) 2
Method: ROTARY

(5) DIMENSIONS: Diameter of well 8 inches
Drilled 350 ft. Depth of completed well 235 ft.

(6) CONSTRUCTION DETAILS:
Casing installed: 8 " Dia. from +2.5 ft. to 235 ft.
WELDED 10 " Dia. from .5 ft. to 132.5 ft.
" Dia. from ft. to . ft.

Perforations: NO
Type of perforator used
SIZE of perforations in. by in.
perforations from ft. to ft.
perforations from ft. to ft.
perforations from ft. to ft.

Screens: YES
Manufacturer's Name NAGAOKA
Type STAINLESS STEEL Model No.
Diam. 8 slot size 30 from 233 ft. to 248 ft.
Diam. slot size from ft. to ft.

Gravel packed: NO Size of gravel
Gravel placed from ft. to ft.

Surface seal: YES To what depth? 20 ft.
Material used in seal BENTONITE
Did any strata contain unusable water? NO
Type of water? Depth of strata ft.
Method of sealing strata off

(7) PUMP: Manufacturer's Name
Type H.P.

(8) WATER LEVELS: Land-surface elevation above mean sea level ... ft.
Static level 183 ft. below top of well Date 02/07/96
Artesian Pressure lbs. per square inch Date
Artesian water controlled by

(9) WELL TESTS: Drawdown is amount water level is lowered below static level.
Was a pump test made? NO If yes, by whom?
Yield: gal./min with ft. drawdown after hrs.

Recovery data

Time	Water Level	Time	Water Level	Time	Water Level

Date of test / /
Bailer test gal/min. ft. drawdown after hrs.
Air test 60+ gal/min. w/ stem set at 233 ft. for 2 hrs.
Artesian flow g.p.m. Date
Temperature of water Was a chemical analysis made? NO

(10) WELL LOG

Formation: Describe by color, character, size of material and structure, and show thickness of aquifers and the kind and nature of the material in each stratum penetrated, with at least one entry for each change in formation.

MATERIAL	FROM	TO
BROWN GRAVEL SAND & COBBLES	0	62
GRAY GRAVEL SAND & COBBLES	62	135
BOULDERS	135	136.5
GRAY GRAVEL & SAND	136.5	137
BOULDER	137	138
BROWN GRAVEL SILT & SAND	138	223
BROWN GRAVEL & WATER	223	243
BROWN GRAVEL & COBBLES	243	250
BROWN GRAVEL & CLAY	250	251
BROWN GRAVEL & WATER	251	264
GRAY SAND GRAVEL & WATER	264	279
GRAY SAND & CLAY	279	285
GRAY SILT SAND & WATER	285	290
GRAY CLAY	290	310
GRAY SILT SAND WOOD	310	320
& WATER	310	320
GRAY SILT & CLAY	320	325
GRAY SAND & CLAY	325	345
GRAY CLAY	345	

Well 3A

Work started 01/30/96 Completed 06/07/96

WELL CONSTRUCTOR CERTIFICATION:
I constructed and/or accept responsibility for construction of this well, and its compliance with all Washington well construction standards. Materials used and the information reported above are true to my best knowledge and belief.

NAME HAYES DRILLING, INC.
(Person, firm, or corporation) (Type or print)

ADDRESS 556 ERSHIG RD., BOW, WA

[SIGNED] Ryan Wilkinson License No. 2190

Contractor's Registration No. HAYESDI106J5 Date 06/14/96

4944

1/11/97 Verified w/ HAYES TO BE LAST

ATTACHMENT A

APPENDIX J

COST ESTIMATES

ATTACHMENT A

Sallal Water Association
Summary CIP
Nov-19

Priority		Infrastructure Needed	Location	Type	Year	Est. Cost (2018 $) W/out NB	Est. Cost (2018 $) W/ NB
1	WQ-1	Chlorine (Disinfection) Systems	Each Well	Disinfection	2019	$150,000	$150,000
2		Water System Plan		Planning	2019	$65,000	$65,000
5	H-1	Office/Warehouse Facilities - Design	Edgewick	Permits	2019	$639,000	$639,000
3	WQ-2	CT Water Main	Well 2	Water Main	2020	$272,000	$272,000
4	S-2	North Bend Contract (Prof Serv)	North Bend	GFC	2020	$0	$30,000
6	D-1	436th at NB Way RAB	NB Way	Water Main	2020	$200,000	$200,000
7	D-2	436th at SE 136th St	436th Ave SE	Water Main	2020	$206,000	$206,000
8	S-1	Well 4 Equipping (New Rattlesnake Well)	Rattlesnake	Well	2020	$1,054,000	$1,054,000
9	ST-1	Rattlesnake Reservoir No. 2	Rattlesnake Ridge	Storage	2020	$1,066,000	$1,066,000
10	BS-1	Flow Meter at Tanner BPS	Tanner	Meter	2020	$35,000	$35,000
11	S-2	Connection between NB/SWA - design	North Bend	BPS & WM	2020	$0	$83,000
12	H-1	Office/Warehouse Facilities - Construction	Edgewick	Construction	2020	$4,271,000	$4,271,000
13	BS-2	Flow Meter & SCADA at Lower Mt. Si	Lower Mt. Si	SCADA	2021	$40,000	$40,000
14	System	Replace Trucks	Various	Vehicles	2021	$50,000	$50,000
15	S-2	Connection between NB/SWA	North Bend	BPS & WM	2022	$0	$837,000
16	BS-3	Flow Meter & SCADA at RP BPS	River Pt	SCADA	2022	$40,000	$40,000
17	S-3	VFD Well 2	Rattlesnake	Well	2022	$65,000	$65,000
18	D-3	Tanner Road - 436th to Sallal Office	Tanner Road	Water Main	2022	$702,000	$781,000
19	System	Small Track Hoe with Trailer	Various	Equipment	2023	$30,000	$30,000
20	ST-2	Rattlesnake Reservoir No. 3	Rattlesnake Ridge	Storage	2024	$1,066,000	$1,990,000
21	D-4	Sampling Stations (3)	Various	Distribution	3-year Budget	$45,000	$45,000
22	D-5	Annual Meter Replacement	Various	Distribution	10-year Budget	$300,000	$300,000
23	D-6	PRV Station upgrades	Various	Distribution	5-year Budget	$125,000	$125,000
24	D-7	Edgewick Road	468th Ave SE	Distribution	2024	$1,393,000	$1,393,000
25	D-8	Cascade East Water Main	793 zone	Distribution	2026	$256,000	$256,000
26	D-9	Terrell Water Main	480th Ave SE	Distribution	2027	$571,000	$571,000
27	D-10	River Point Fire Flow	Mt. Si Road	Distribution	2029	$492,000	$492,000
28	D-11	Watermain Replacement - Budget	Various	Distribution	4-year Budget	$600,000	$600,000
						$13,733,000	**$15,686,000**

ATTACHMENT A

SALLAL WATER ASSOCIATION
WELL 2 CT 18-IN WATER MAIN IN SERVICE ROAD
PROJECT COST ESTIMATE
Provides CT of 6 for 700 gpm at 0.7 mg/L residual
Dec-19

NO.	ITEM	QUANTITY		UNIT PRICE	AMOUNT
1	Mobilization, Cleanup, and Demobilization	1	LS	$18,900	$18,900
2	Minor Changes	1	CALC	$10,000	$10,000
3	Locate Existing Utilities	1	LS	$2,000	$2,000
4	Clearing and Grading	1	LS	$5,000	$5,000
5	Erosion Control	1	LS	$3,000	$3,000
6	Crushed Surfacing, Top Course	70	TN	$30	$2,100
7	Trench Safety Systems	1	LS	$1,000	$1,000
8	8-inch DI Water Pipe, Including Fittings	80	LF	$100	$8,000
9	24-inch DI Water Pipe, Including Fittings	300	LF	$260	$78,000
10	Additional Pipe Fittings	1000	LB	$5	$5,000
11	Connections to Existing System	2	EA	$4,000	$8,000
12	8-in Tapping tee and valve	1	EA	$7,500	$7,500
13	12-in Tapping tee and valve	1	EA	$8,200	$8,200
14	12-inch Gate Valves	1	EA	$4,000	$4,000
15	Bankrun Gravel for trench Backfill	200	TN	$20	$4,000
16	Foundation Gravel	15	TN	$40	$600
17	Fire Hydrant Assembly	1	EA	$6,000	$6,000
18	Sample Station	1	EA	$3,000	$3,000
	Subtotal				**$174,300**
	Tax	8.60%			$14,990
	Construction Cost				**$189,290**
	Contingency	15%			$28,393
	Subtotal				**$217,683**
	Design, Permitting, Project Administration	25%			$54,421
	Project Total				**$272,000**

ATTACHMENT A

SALLAL WATER ASSOCIATION
WATER MAIN - NB Way @ 436th Roundabout
PROJECT COST ESTIMATE
Dec-19

NO.	ITEM	QUANTITY		UNIT PRICE	AMOUNT
1	Mobilization, Cleanup, and Demobilization	1	LS	$15,600	$15,600
2	Minor Changes	1	CALC	$15,000	$15,000
3	Traffic Control	30	HRS	$60	$1,800
4	Locate Existing Utilities	1	LS	$7,000	$7,000
5	Sawcutting	800	LF	$4.0	$3,200
6	Erosion Control	1	LS	$5,000	$5,000
7	Crushed Surfacing, Top Course	100	TN	$40	$4,000
8	HMA Cl. 1/2 PG 58-22	-	TN	$150	$0
9	Temporary HMA	-	TN	$200	$0
10	Trench Safety Systems	1	LS	$2,000	$2,000
11	12-inch DI Water Pipe, Including Fittings	400	LF	$110	$44,000
12	Additional Pipe Fittings	160	LB	$5	$800
13	Connections to Existing System	2	EA	$4,000	$8,000
14	12-inch Gate Valves	4	EA	$4,500	$18,000
15	Bankrun Gravel for trench Backfill	200	TN	$25	$5,000
16	Foundation Gravel	20	TN	$40	$800
17	Hydrant Assembly	1	EA	$5,000	$5,000
18	Water Services	3	EA	$2,500	$7,500
19	Pavement Markings	800	LF	$3.00	$2,400
	Subtotal				**$ 145,100**
	Tax	8.90%			$12,914
	Construction Cost				**$158,014**
	Contingency	15%			$23,702
	Subtotal				**$181,716**
	Design, Permitting, Project Administration	10%			$18,172
	Project Total				**$200,000**

SALLAL WATER ASSOCIATION
WATER MAIN - 436th at SE 136th
PROJECT COST ESTIMATE
Dec-19

NO.	ITEM	QUANTITY		UNIT PRICE	AMOUNT
1	Mobilization, Cleanup, and Demobilization	1	LS	$16,100	$16,100
2	Minor Changes	1	CALC	$15,000	$15,000
3	Traffic Control	40	HRS	$60	$2,400
4	Locate Existing Utilities	1	LS	$7,000	$7,000
5	Sawcutting	900	LF	$4.0	$3,600
6	Erosion Control	1	LS	$5,000	$5,000
7	Crushed Surfacing, Top Course	100	TN	$40	$4,000
8	HMA Cl. 1/2 PG 58-22	-	TN	$150	$0
9	Temporary HMA	-	TN	$200	$0
10	Trench Safety Systems	1	LS	$2,000	$2,000
11	12-inch DI Water Pipe, Including Fittings	450	LF	$110	$49,500
12	Additional Pipe Fittings	180	LB	$5	$900
13	Connections to Existing System	2	EA	$4,000	$8,000
14	8-inch Gate Valves	5	EA	$3,000	$15,000
17	Bankrun Gravel for trench Backfill	200	TN	$25	$5,000
18	Foundation Gravel	20	TN	$40	$800
16	Hydrant Assembly	1	EA	$5,000	$5,000
15	Water Services	3	EA	$2,500	$7,500
19	Pavement Markings	900	LF	$3.00	$2,700
	Subtotal				**$ 149,500**
	Tax	8.90%			$13,306
	Construction Cost				**$162,806**
	Contingency	15%			$24,421
	Subtotal				**$187,226**
	Design, Permitting, Project Administration	10%			$18,723
	Project Total				**$206,000**

ATTACHMENT A

SALLAL WATER ASSOCIATION
WELL 4 - EQUIPPING
PROJECT COST ESTIMATE
Dec-19

NO.	ITEM	QUANTITY		UNIT PRICE	AMOUNT
1	Minor Change	1	CALC	$15,000	$20,000
2	Mobilization and Demobilization	1	LS	$73,000	$73,000
3	Clearing and Grubbing	1	LS	$10,000	$10,000
4	Locate Existing Utilities	1	LS	$2,000	$2,000
5	Project Traffic Control	1	LS	$5,000	$5,000
6	Tree Removal	10	EA	$1,500	$15,000
7	Erosion Control	1	LS	$5,000	$5,000
8	Trench Excavation Safety Systems	1	LS	$5,000	$5,000
9	Site Earthwork	1	LS	$5,000	$5,000
10	Well Pump Building	1	LS	$81,000	$81,000
11	Well Pump Building Valves and Appurtenanc	1	LS	$10,500	$10,500
12	Well Pump Assembly	1	LS	$240,000	$240,000
13	Unsuitable Excavation	10	CY	$60	$600
14	Foundation Gravel	20	TN	$50	$1,000
15	Water Distribution	1	LS	$50,000	$50,000
16	Additional Fittings	300	LB	$5	$1,500
17	Structural Fill	60	TN	$25	$1,500
18	Bank Run Gravel for Trench Backfill	40	TN	$20	$800
19	Hypochlorite System	1	EA	$10,000	$10,000
20	Electric Service	1	LS	$15,000	$15,000
21	Site Electrical	1	LS	$245,000	$245,000
22	Security Fencing	100	LF	$55	$5,500
	Subtotal Equipping & Piping				**$802,400**
	Sales Tax	8.60%			$69,006
	Subtotal Equipping and Piping				**$871,406**
	Contingency	10%			$87,141
	Subtotal				**$958,547**
	System Intgration/Controls - Blackfin				$75,000
	Design, Permitting				$94,840
	Project Admin				$115,100
	Well Equipping Project Total				**$1,149,000**

SALLAL WATER ASSOCIATION
RATTLESNAKE 0.24 MG MT BAKER CONCRETE SILOS (3)
PROJECT COST ESTIMATE
Dec-19

NO.	ITEM	QUANTITY		UNIT PRICE	AMOUNT
1.	Unexpected Site Changes	1	LS	$10,000	$10,000
2.	Mobilization and Demobilization	1	LS	$66,000	$66,000
3.	Clearing and Grubbing	1	LS	$10,000	$10,000
4.	Temporary Erosion Control	1	LS	$5,000	$5,000
5.	Locate Existing Utilities	1	LS	$2,000	$2,000
6.	Trench Excavation Safety Systems	1	LS	$2,000	$2,000
7.	Site Earthwork	1	LS	$40,000	$40,000
8.	Modular Block Wall	640	SF	$80	$51,200
9.	0.26 MG Mt Baker Silo Reservoir incl. Foundation	1	LS	$403,000	$403,000
10.	Check valve vaults	2	EA	$20,000	$40,000
11.	Site Piping	1	LS	$101,000	$101,000
12.	Surface Restoration	1	LS	$2,000	$2,000
13.	Crushed Surfacing Base Course	120	TN	$50	$6,000
14.	Fencing	300	LF	$60	$18,000
15.	Unsuitable Excavation	100	CY	$60	$6,000
	Subtotal (Rounded)				$762,200
	Sales Tax	8.60%			$65,549
	Subtotal				$827,749
	Contingency	15%			$124,200
	Subtotal				**$951,949**
	Design, Permitting, Project Administration	12%			$114,000
	Project Administration	12%			$114,000
	Subtotal				**$1,066,000**

ATTACHMENT A

SALLAL LAKE WATER ASSOCIATION
HEADQUARTERS
PROJECT COST ESTIMATE
Dec-19

NO.	ITEM	QUANTITY	UNIT PRICE	AMOUNT
1	Mobilization and Demobilization	1 LS	$69,000	$69,000
2	Unexpected Site Changes	1 CALC	$20,000	$20,000
3	Traffic Control	1 LS	$3,300	$3,300
4	Temporary Shoring & Bracing	1 LS	$1,100	$1,100
5	Erosion and Sedimentation Control	1 LS	$6,600	$6,600
6	Demolition of Existing Structures	1 LS	$20,000	$20,000
7	Clearing & Grubbing	1 LS	$15,000	$15,000
8	Site Earthwork	1 LS	$20,000	$20,000
9	Stormwater Pond and Swales Excavation	720 CY	$40	$28,800
10	Oil/Water Separator	1 LS	$6,000	$6,000
11	Crushed Surfacing	920 TN	$20	$18,400
12	Commercial HMA	750 TN	$180	$135,000
14	Sawcutting	50 LF	$5	$250
15	Site Piping	1 LS	$20,000	$20,000
16	Fencing & Gate	1,700 LF	$55	$93,500
17	Landscaping with Irrigation	1 LS	$200,000	$200,000
18	Topsoil	90 CY	$80	$7,200
19	Septic System	1 LS	$35,000	$35,000
20	Site Restoration	1 LS	$16,500	$16,500
			Subtotal	**$715,650**

State Sales Tax:	8.6%	$61,546
Subtotal		**$777,196**
Contingency:	15%	$116,580
Estimated Subtotal Site Work Construction Cost:		**$894,000**
Project Administration, Construction Management	20%	$179,000
Estimated Total Site Work Project Cost:		**$1,073,000**
Architect estimate for building		$2,557,800
Project soft costs - Tax, Design, Project Admin, Legal	43%	$1,099,854
Subtotal		$3,657,654
Contingency	5%	$182,882.70
Building Total:		**$3,840,537**
PROJECT TOTAL COST:		**$4,910,000**

SALLAL WATER ASSOCIATION
NORTH BEND BPS
PROJECT COST ESTIMATE
Dec-19

NO.	ITEM	QUANTITY		UNIT PRICE	AMOUNT
1	Mobilization, Cleanup, and Demobilization	1	LS	$44,000	$44,000
2	Minor Changes	1	CALC	$10,000	$10,000
3	Clearing and Grubbing	1	LS	$7,000	$7,000
4	Temporary Shoring and Bracing	1	LS	$1,000	$1,000
5	Temporary Erosion and Sediment Control	1	LS	$1,000	$1,000
6	Booster Pump Building	1	EA	$63,000	$63,000
7	Booster Pump Station - Piping & Valves	1	LS	$88,000	$88,000
8	Site Piping	1	LS	$50,000	$50,000
9	Reservoir (20,000 gal Mt. Baker silo), incl foundation	0	LS	$100,000	$0
10	Booster Pump Assemblies	2	EA	$12,000	$24,000
11	Electrical Service	1	LS	$15,000	$15,000
12	Site Electrical	1	LS	$100,000	$100,000
13	Telemetry, PLC and Programming	1	LS	$50,000	$50,000
	Subtotal				$453,000
	Tax	8.90%			$40,317
	Construction Cost NB Booster Station in New Bldg:				**$493,317**
	Contingency	20%			$98,663
	Subtotal				**$591,980**
	Design, Permitting, Project Administration	25%			$147,995
	Project Total				**$740,000**
	Booster Station and Pipe				**$830,000**

SALLAL WATER ASSOCIATION
WATER MAIN - NORTH BEND TO SALLAL
PROJECT COST ESTIMATE
Dec-19

NO.	ITEM	QUANTITY		UNIT PRICE	AMOUNT
1	Mobilization, Cleanup, and Demobilization	1	LS	$5,900	$5,900
2	Minor Changes	1	CALC	$10,000	$10,000
17	Traffic Control	10	HRS	$60	$600
3	Locate Existing Utilities	1	LS	$3,000	$3,000
4	Erosion Control	1	LS	$2,000	$2,000
5	Crushed Surfacing, Top Course	10	TN	$45	$450
6	HMA Cl. 1/2 PG 58-22	10	TN	$150	$1,500
7	Temporary HMA	5	TN	$200	$1,000
8	Trench Safety Systems	1	LS	$1,000	$1,000
9	8-inch DI Water Pipe, Including Fittings	100	LF	$100	$10,000
10	Additional Pipe Fittings	40	LB	$5	$200
11	Connections to Existing System	1	EA	$4,000	$4,000
12	12-inch Gate Valves	2	EA	$4,500	$9,000
13	Bankrun Gravel for trench Backfill	30	TN	$25	$750
14	Foundation Gravel	3	TN	$40	$120
15	Sawcutting	200	LF	$2.5	$500
16	Hydrant Assembly	1	EA	$5,000	$5,000
	Subtotal				**$ 55,020**
	Tax	8.90%			$4,897
	Construction Cost NB BPS to Sallal				**$59,917**
	Contingency	20%			$11,983
	Subtotal				**$71,900**
	Design, Permitting, Project Administration	25%			$17,975
	Project Total				**$90,000**

ATTACHMENT A

SALLAL WATER ASSOCIATION
WATER MAIN - NB WAY, 436th to SALLAL OFFICE
PROJECT COST ESTIMATE
Dec-19

NO.	ITEM	QUANTITY		UNIT PRICE	AMOUNT
1	Mobilization, Cleanup, and Demobilization	1	LS	$53,500	$53,500
2	Minor Changes	1	CALC	$15,000	$15,000
3	Traffic Control	100	HRS	$60	$6,000
4	Locate Existing Utilities	1	LS	$7,000	$7,000
5	Sawcutting	3,000	LF	$4.0	$12,000
6	Erosion Control	1	LS	$5,000	$5,000
7	Crushed Surfacing, Top Course	100	TN	$40	$4,000
8	HMA Cl. 1/2 PG 58-22	500	TN	$150	$75,000
9	Temporary HMA	350	TN	$200	$70,000
10	Trench Safety Systems	1	LS	$2,000	$2,000
11	12-inch DI Water Pipe, Including Fittings	1,500	LF	$110	$165,000
12	Additional Pipe Fittings	600	LB	$5	$3,000
13	Connections to Existing System	2	EA	$4,000	$8,000
14	12-inch Gate Valves	5	EA	$4,500	$22,500
17	Bankrun Gravel for trench Backfill	500	TN	$25	$12,500
18	Foundation Gravel	50	TN	$40	$2,000
16	Hydrant Assembly	2	EA	$5,000	$10,000
15	Water Services	7	EA	$2,500	$17,500
19	Pavement Markings	3,000	LF	$3.00	$9,000
	Subtotal				**$ 499,000**
	Tax	8.90%			$44,411
	Construction Cost				**$543,411**
	Contingency	15%			$81,512
	Subtotal				**$624,923**
	Design, Permitting, Project Administration	25%			$156,231
	Project Total				**$781,000**

SALLAL WATER ASSOCIATION
WATER MAIN - CASCADE EAST
PROJECT COST ESTIMATE
Dec-19

NO.	ITEM	QUANTITY		UNIT PRICE	AMOUNT
1	Mobilization, Cleanup, and Demobilization	1	LS	$17,600	$17,600
2	Minor Changes	1	CALC	$15,000	$15,000
3	Traffic Control	30	HRS	$60	$1,800
4	Locate Existing Utilities	1	LS	$7,000	$7,000
5	Sawcutting	700	LF	$4.0	$2,800
6	Erosion Control	1	LS	$5,000	$5,000
7	Crushed Surfacing, Top Course	100	TN	$40	$4,000
8	HMA Cl. 1/2 PG 58-22	100	TN	$150	$15,000
9	Temporary HMA	70	TN	$200	$14,000
10	Trench Safety Systems	1	LS	$2,000	$2,000
11	8-inch DI Water Pipe, Including Fittings	350	LF	$85	$29,750
12	Additional Pipe Fittings	140	LB	$5	$700
13	Connections to Existing System	2	EA	$4,000	$8,000
14	8-inch Gate Valves	3	EA	$3,000	$9,000
15	Water Services	7	EA	$2,500	$17,500
16	Hydrant Assembly	2	EA	$5,000	$10,000
17	Bankrun Gravel for trench Backfill	100	TN	$25	$2,500
18	Foundation Gravel	10	TN	$40	$400
19	Pavement Markings	700	LF	$3.00	$2,100
	Subtotal				**$ 164,150**
	Tax	8.60%			$14,117
	Construction Cost				**$178,267**
	Contingency	15%			$26,740
	Subtotal				**$205,007**
	Design, Permitting, Project Administration	25%			$51,252
	Project Total				**$256,000**

ATTACHMENT A

SALLAL WATER ASSOCIATION
WATER MAIN - EDGEWICK ROAD - UNDER I-90
PROJECT COST ESTIMATE
Dec-19

NO.	ITEM	QUANTITY		UNIT PRICE	AMOUNT
1	Mobilization, Cleanup, and Demobilization	1	LS	$91,900	$91,900
2	Minor Changes	1	CALC	$15,000	$15,000
3	Traffic Control	160	HRS	$60	$9,600
4	Locate Existing Utilities	1	LS	$7,000	$7,000
5	Sawcutting	4,800	LF	$4.0	$19,200
6	Erosion Control	1	LS	$5,000	$5,000
7	Crushed Surfacing, Top Course	200	TN	$40	$8,000
8	HMA Cl. 1/2 PG 58-22	1,200	TN	$150	$180,000
9	Temporary HMA	840	TN	$200	$168,000
10	Trench Safety Systems	1	LS	$2,000	$2,000
11	12-inch DI Water Pipe, Including Fittings	2,400	LF	$110	$264,000
12	Additional Pipe Fittings	960	LB	$5	$4,800
13	Connections to Existing System	2	EA	$4,000	$8,000
14	12-inch Gate Valves	4	EA	$4,500	$18,000
15	Water Services	5	EA	$2,500	$12,500
16	Hydrant Assembly	2	EA	$5,000	$10,000
17	Bankrun Gravel for trench Backfill	700	TN	$25	$17,500
18	Foundation Gravel	70	TN	$40	$2,800
19	Pavement Markings	4,800	LF	$3.00	$14,400
	Subtotal				**$ 857,700**
	Tax	8.60%			$73,762
	Construction Cost				**$931,462**
	Contingency	15%			$139,719
	Subtotal				**$1,071,182**
	Design, Permitting, Project Administration	30%			$321,354
	Project Total				**$1,393,000**

ATTACHMENT A

SALLAL WATER ASSOCIATION
TERRELL WATER MAIN
PROJECT COST ESTIMATE
Dec-19

NO.	ITEM	QUANTITY		UNIT PRICE	AMOUNT
1	Mobilization, Cleanup, and Demobilization	1	LS	$39,200	$39,200
2	Minor Changes	1	CALC	$15,000	$15,000
3	Traffic Control	90	HRS	$60	$5,400
4	Locate Existing Utilities	1	LS	$7,000	$7,000
5	Sawcutting	2,600	LF	$4.0	$10,400
6	Erosion Control	1	LS	$5,000	$5,000
7	Crushed Surfacing, Top Course	100	TN	$40	$4,000
8	HMA Cl. 1/2 PG 58-22	400	TN	$150	$60,000
9	Temporary HMA	280	TN	$200	$56,000
10	Trench Safety Systems	1	LS	$2,000	$2,000
11	8-inch DI Water Pipe, Including Fittings	1,300	LF	$85	$110,500
12	Additional Pipe Fittings	520	LB	$5	$2,600
13	Connections to Existing System	2	EA	$4,000	$8,000
14	8-inch Gate Valves	2	EA	$3,000	$6,000
15	Water Services	-	EA	$2,500	$0
16	Hydrant Assembly	3	EA	$5,000	$15,000
17	Bankrun Gravel for Trench Backfill	400	TN	$25	$10,000
18	Foundation Gravel	40	TN	$40	$1,600
19	Pavement Markings	2,600	LF	$3.00	$7,800
	Subtotal				**$ 365,500**
	Tax	8.60%			$31,433
	Construction Cost				**$396,933**
	Contingency	15%			$59,540
	Subtotal				**$456,473**
	Design, Permitting, Project Administration	25%			$114,118
	Project Total				**$571,000**

ATTACHMENT A

SALLAL WATER ASSOCIATION
RIVER POINT WATER MAIN
PROJECT COST ESTIMATE
Dec-19

NO.	ITEM	QUANTITY		UNIT PRICE	AMOUNT
1	Mobilization, Cleanup, and Demobilization	1	LS	$33,800	$33,800
2	Minor Changes	1	CALC	$15,000	$15,000
3	Traffic Control	80	HRS	$60	$4,800
4	Locate Existing Utilities	1	LS	$7,000	$7,000
5	Sawcutting	2,200	LF	$4.0	$8,800
6	Erosion Control	1	LS	$5,000	$5,000
7	Crushed Surfacing, Top Course	100	TN	$40	$4,000
8	HMA Cl. 1/2 PG 58-22	300	TN	$150	$45,000
9	Temporary HMA	210	TN	$200	$42,000
10	Trench Safety Systems	1	LS	$2,000	$2,000
11	8-inch DI Water Pipe, Including Fittings	1,100	LF	$85	$93,500
12	Additional Pipe Fittings	440	LB	$5	$2,200
13	Connections to Existing System	2	EA	$4,000	$8,000
14	8-inch Gate Valves	2	EA	$3,000	$6,000
15	Water Services	4	EA	$2,500	$10,000
16	Hydrant Assembly	2	EA	$5,000	$10,000
17	Bankrun Gravel for Trench Backfill	400	TN	$25	$10,000
18	Foundation Gravel	40	TN	$40	$1,600
19	Pavement Markings	2,200	LF	$3.00	$6,600
	Subtotal				**$ 315,300**
	Tax	8.60%			$27,116
	Construction Cost				**$342,416**
	Contingency	15%			$51,362
	Subtotal				**$393,778**
	Design, Permitting, Project Administration	25%			$98,445
	Project Total				**$492,000**

ATTACHMENT A

APPENDIX K

WATER SYSTEM FEE SCHEDULE

ATTACHMENT A

P.O. Box 378
North Bend, WA 98045-0378
(425) 888-3650
Fax (425) 831-5392 email: info@sallal.com

Member Owned Co-op

SALLAL WATER ASSOCIATION

MASTER RATE SCHEDULE - 2019 (Effective 01/01/19)

SALLAL WATER ASSOCIATION
("Association")

I. Administration Fee — $500

II. Minimum Meter Installation Fee — **$1,000;** actual out of pocket and labor costs are charged if costs exceed the minimum fee.

III. Membership Fees

A. General Facilities Element

1. **Rate.** The rate for the General Facilities element is $17,711 per ERU applicable to membership applicant's land and improvements.

2. **ERU Definition.** The Association measures an Equivalent Residential Unit (ERU) as follows:

- i. **Single Family Residences and ADU's.** A single family residence equals one ERU. An Accessory Dwelling Unit as defined by the King County Code that is not physically part of the primary residence is equal to one ERU.
- ii **Mfg'd Homes, Mobile Homes, Trailers and Pads.** Each manufactured home, modular home, mobile home, trailer with living quarters and the like and each unoccupied pad for the foregoing with a water hookup is equal to one ERU.
- iii. **All Other Types of Connections.** The number of ERU's attributable to all other connections to the Association's water system shall be measured by the higher of:
    - a. The multipliers based on meter size using the schedule set forth below (i.e., a one and one-half inch meter equals five ERUs); or
    - b. Average day water usage of the subject parcel taking into account all improvements and uses existing and/or proposed by the membership applicant divided by 182 (average water consumption per day of an ERU from page 2-7, May 2006, Revised January 2009 Association Water System Plan)

rounded to the nearest whole number. Unless the membership applicant and Association agree in writing on a specific usage amount, average day water usage shall be based on an estimate of water usage prepared by the applicant's licensed professional engineer which shall be reviewed for reasonableness by Association and adjusted as Association deems reasonable and appropriate. If additional improvements are constructed on the parcel or unanticipated uses are added, the Association may recalculate the number of ERU's and charge applicant with additional non fire flow general facility charges. If actual usage is less than the estimate, there shall be no reduction in ERU's or charges because water system facilities are deemed to be sized to meet the applicant's estimated or agreed upon average day demand. Notwithstanding the foregoing, if an applicant for membership applies for a use which contains a maximum peak day demand which exceeds the Association's normal peak day demand guidelines as contained in its water system plan, the number of ERU's may be equally adjusted.

3. **ERU's per Meter Size.** Multipliers for applicable sized meter per III. A2.iii are as follows:

	METER SIZE			
	5/8"	**1"**	**1 l/2"**	**2"**
General Facilities Element	**$17,711**	**$44,277.50 ***	**$88,555**	**$141,688**
AWWA Multiplier	**1.00**	**2.5**	**5.00**	**8.00**

Multiplier is based on meter flow factors published by the American Water Works Association (C700-09) and similar standards. For larger meters, the Association's engineer shall examine operating guidelines for the proposed meter and apply or extrapolate AWWA standards to arrive at the ERU multiple.

Exception* Single family homes requiring a one inch meter due to an in-home fire suppression system shall pay the 5/8" rate

C. SAMPLE CALCULATIONS

1. **Example for a single family home requiring a 5/8” meter with minimum fire flow requirement**

General Facilities Element	**$17,711**
Administration Fee	**$500**
Minimum Meter Installation	**$1,000**
Total	**$19,211**

2. **Example for a business requiring a 2” meter (ERU’s based on meter size exceeds ERU’s based on actual use)**

General Facilities Element	**$141,688**
Administration Fee	**$500**
Minimum Meter Installation	**$1,000**
Total	**$143,188**

3. **Example for a business requiring a 2” meter that will utilize a constant flow of 30 gpm for 12 hours per day (ERU’s based on water use exceed ERU’s based on meter size)**

General Facilities Element		
30 x 720 (12 hrs x 60 min)	**21,600 gpd**	
21,600/182	**119 ERU’s**	
119 x $17,711		**$2,107,609**
Administration Fee		**500**
Minimum Meter Installation		**1,000**
Total		**$2,109,109**

4. **Example for 10 unit apartment complex with a 2” meter (using AWWA meter size multiplication factors)**

General Facilities Element (17,711 x 8)	**$ 141,688**
Administration Fee	**500**
Minimum Meter Installation	**1,000**
Total	**$ 143,188**

IV. MONTHLY FIXED RATE SCHEDULE

A. All Connections

Meter Size	Multiplier*	Monthly Charge Amounts Amortization	Base Rate
5/8” x ¾” Meter	**x 1**	**$11.62**	**$ 7.86**
1” Meter	**x 2.5**	**$29.05**	**$19.67**
1-1/2” Meter	**x 5**	**$58.10**	**$39.30**
2” Meter	**x 8**	**$92.96**	**$62.87**

***Multiplier is based on meter flow factors published by the American Water Works Association (C700-09) and similar standards. For larger meters, the Association’s engineer shall examine operating guidelines for the proposed meter and apply or extrapolate AWWA standards to arrive at the ERU multiple.**

B. Non-User Members. Non Users shall pay Amortization and Base Rate based on 5/8” x ¾” meter ($18.90 per month total).

C. Wholesale – Wilderness Rim

Monthly Amortization Fee	$ 115.00
Monthly Base Fee	$15,358.57

V. Water Usage Rates

Amount Passing Through Meter	**Usage rates**

A. Single Family Residential

1 – 500 cubic feet	$ 2.48 per ccf
501 – 800 cubic feet	$ 2.92 per ccf
801 – 1,500 cubic feet	$ 3.75 per ccf
1,501 – 3,000 cubic feet	$ 4.51 per ccf
3,001 – 7,000 cubic feet	$11.26 per ccf
7,001 + cubic feet	$22.55 per ccf

#1 CCF = 100 Cubic Feet

B. All Other Connections Except Irrigation Only Meters and Wholesale

1 – 500 cubic feet	$ 2.48 per ccf
501 – 800 cubic feet	$ 2.92 per ccf
801 – 1,500 cubic feet	$ 3.75 per ccf
1,500 + cubic feet	$ 4.51 per ccf

C. Irrigation (applies to meters used only for irrigation purposes)

1 – 500 cubic feet	$ 4.51 per ccf
501 – 800 cubic feet	$ 4.97 per ccf
801 – 1,500 cubic feet	$ 6.77 per ccf
1,500 – 3,000 cubic feet	$ 8.58 per ccf
3,001 – 7,000 cubic feet	$11.26 per ccf
7,001 + cubic feet	$22.55 per ccf

D. WHOLESALE _ WILDERNESS RIM

Water Usage $ 2.30 per ccf for each ccf in excess of 5,390,000 cubic feet per calendar year

F. Bulk Water Sales (see page 6)

VI. Monthly Water Rate Surcharges

The following amounts shall be charged in addition to monthly Amortization, Base and Water Usage Charges:

A. EXCISE / B & O TAX FEE (State) - applies to all members: 6% of the total of fixed monthly rates (amortization and base charges) and water usage charges.

B. PUBLIC UTILITY TAX FEE (North Bend) – applies to connections only located within the City of North Bend and is in addition to the Excise / B&O Tax Fee: 6.38% of the total of fixed monthly rates (amortization and base charges) and water usage plus cross connection and tax charges.

VII. MISCELLANEOUS FEES

Temporary Meter / Faucet (per month plus usage)	$ 150.00
Water Meter Special Read	$ 10.00
Turn On / Off (delinquent account)	$ 75.00
Unlock Meter After Hours (In addition to Turn On Fee)	$ 100.00
Turn On / Off Meter for Testing Purposes	$ 150.00
Deliberate Lock / Unlock / Break of Service	$ 500.00
Unauthorized Fire Hydrant Use	$ 500.00
NSF Check (each time)	$ 50.00
Credit Card Convenience Charge (per transaction)	$ 3.00
Relocation of Service	$1,000.00 minimum
Transfer Fee – User and Non-User (transferring member pays)	$ 25.00
Delinquent Notice (shut off letter)	$ 25.00
Late Fee (applies to prior month's unpaid billing)	10%
Noncompliance with Backflow Testing and Use	$ 50.00 +Turn Off Fees
Developer Extension Application Fee	$ 500.00
Labor Rates	2x base wage rate
Certificate of Water Availability	
Existing member (single family residence or remodel)	$ -0-
Non-Member (single family residence)	$ 500.00 + engineering fees
Other (commercial)	$ 500.00 + engineering fees
Water Storage Assessment Fee	$ 240.00

A storage assessment fee was levied against all memberships in the Sallal Water Association as of record on January 1, 1980. This fee can be paid at any time by existing members. However, it **MUST** be paid no later than the transfer of said membership.

Bulk Water Rates

- Permit fee of $150.00 – good for one (1) season (year)
- Deposit of $100.00 for meter – refundable at end of use if no damage to meter
- Water to be used in Sallal's service territory only
- Purchaser to be responsible for all damaged parts
- Water rates = $5.00 per 100 cubic feet up to 10,000 cubic feet. $7.50 per cubic feet for everything over 10,000 cubic feet

APPENDIX L

SEPA CHECKLIST AND
LOCAL CONSISTENCY STATEMENTS

PART ELEVEN – FORMS

WAC 197-11-960 Environmental Checklist.

ENVIRONMENTAL CHECKLIST

A. BACKGROUND

1. Name of proposed project, if applicable.

Water System Comprehensive Plan

2. Name of Applicant:

Sallal Water Associaiton

3. Address and Phone Number of Applicant and Contact Person:

Ted Stonebridge, Manager
P.O. Box 378
44021 SE Tanner Rd Suite E
North Bend, WA 98045-0378
425-888-3650

4. Date Checklist Prepared:

July 2019

5. Agency Requesting Checklist

King County

6. Proposed Timing or Schedule (including phasing, if applicable)

The development of Water System Comprehensive Plan (Plan) occurred in 2018 and 2019.

7. Do you have any plans for future additions, expansion, or further activity related to or connected with this proposal? If yes, explain.

This Plan provides a 10-year capital improvement plan (CIP). These projects will be implemented based on need and available financing.

8. List any environmental information you know about that has been prepared, or will be prepared, directly related to this proposal.

None.

9. Do you know whether applications are pending for governmental approvals of other proposals directly affecting the property covered by your proposal. If yes, explain.

   This Plan will require approval by the Washington Department of Health, and King County prior to adoption by the Association.

10. List any government approvals or permits that will be needed for your proposal, if known.

    Government approval and permits will be obtained for each project implemented in the CIP.

11. Give brief, complete description of your proposal, including the proposed uses and the size of the project and site. There are several questions later in this checklist that ask you to describe certain aspects of your proposal. You do not need to repeat those answers on this page. (Lead agencies may modify this form to include additional specific information on project description.)

    The scope of work for the Water System Comprehensive Plan is organized into the following chapters:

    - *Chapter 1, Introduction, provides background information including system history, inventory of existing facilities, service area agreements, interlocal agreements, future service area, service area policies and conditions of service, and related planning documents.*

    - *Chapter 2, Basic Planning Data, includes existing and future population projections; number of service area connections; and water use data including production, consumption, lost and unaccounted for water, peaking factors, and equivalent residential units. Service area characteristics, existing and projected land use, and water demand forecasts are also included.*

    - *Chapter 3, Water Quality - includes existing drinking water quality standards, anticipated future drinking water quality standards, water quality monitoring schedule, and water quality analysis.*

    - *Chapter 4, Hydraulic Analysis - discusses the hydraulic modeling program, model development, system demands, model calibration, and distribution system analysis that includes peak hour and available fire flow simulations. System design standards, general facility standards, and an analysis of Granite Falls' source of supply, and storage capacity.*

    - *Chapter 5, Water Conservation Plan, includes water use data collection, program development and implementation, recommended measures and level of implementation, regional conservation programs, Granite Falls' conservation program, water right evaluation, and water system reliability analysis.*

    - *Chapter 6, Source Water Protection Program – Wellhead Protection and potential contaminant inventory.*

- *Chapter 7, Operations and Maintenance Program, reviews water system management and personnel, operator certification, routine operating procedures, preventative maintenance, record keeping, water quality sampling procedures, and discusses the coliform monitoring plan, emergency response program, safety procedures, cross-connection control program, and service reliability.*

- *Chapter 8, Design Standards – Presents the design and construction standards.*
-
- *Chapter 9, Capital Improvement Plan (CIP), provides an implementation schedule for 10 years.*

- *Chapter 10, Financial Program, analyzes past income and expenses, revenue and cash flow to fund CIP and emergency improvements, and assesses the rate structure to consider affordability of rates and water conservation.*

12. Location of the proposal. Give sufficient information for a person to understand the precise location of your proposed project, including the street address, if any, and section, township, and range, if known. If a proposal would occur over a range of areas, provide the range or boundaries of the site(s). While you should submit any plans required by the agency, you are not required to duplicate maps or detailed plans submitted with any permit applications related to this checklist.

    The study area for this Plan is the service area for Sallal, which incorporates part of North Bend and unincorporated King County.

B. ENVIRONMENTAL ELEMENTS

This is a nonproject action, therefore a number of the environmental elements will not apply. A general answer will be provided where appropriate. The answers will apply generally to Granite Falls' service area.

1. Earth

a. General description of the site (check one): ☒ flat, ☒ rolling, ☒ hilly, ☒ steep slope, ☐ other:

b. What is the steepest slope on the site (approximate percent slope)?

Sallal is situated in the eastern portion of North Bend and extends east, south and north of the City limits. The southern extent is Rattlesnake Lake, the northern extent is the base of Mt Si and the eastern extent is east of Trucktown (468th Ave SE). The Snoqualmie River flows through the Sallal service area.

c. What general types of soils are found at on the site (for example, clay, sand, gravel, peat, muck)? If you know the classification of agricultural soils, specify them and note any prime farmland.

Generally the soils are permeable outwash.

d. Are there surface indications or history of unstable soils in the immediate vicinity? If so, describe.

To be determined on a project specific basis.

e. Describe the purpose, type, and approximate quantities of any grading proposed. Indicate source of fill.

To be determined on a project specific basis.

f. Could erosion occur as a result of clearing, construction, or use? If so, generally describe.

To be determined on a project specific basis.

g. About what percent of the site will be covered with impervious surfaces after project construction (for example, asphalt or buildings)?

To be determined on a project specific basis.

h. Proposed measures to reduce or control erosion, or other impacts to the earth, if any:

To be determined on a project specific basis.

2. Air

a. What types of emissions to the air would result from the proposal (i.e., dust, automobile, odors, industrial wood smoke) during construction and when the project is completed? If any, generally describe and give approximate quantities if known.

To be determined on a project specific basis.

b. Are there any off-site sources of emissions or odor that may affect your proposal? If so, generally describe.

To be determined on a project specific basis.

c. Proposed measures to reduce or control emissions or other impacts to air, if any:

To be determined on a project specific basis.

3. Water

a. Surface:

1) Is there any surface water body on or in the immediate vicinity of the site (including year-round and seasonal streams, saltwater, lakes, ponds, wetlands)? If yes, describe type and provide names. If appropriate, state what stream or river it flows into.

To be determined on a project specific basis.

2) Will the project require any work over, in, or adjacent to (within 200 feet) the described waters? If yes, please describe and attach available plans.

To be determined on a project specific basis.

3) Estimate the amount of fill and dredge material that would be placed in or removed from surface water or wetlands and indicate the area of the site that would be affected. Indicate the source of fill material.

To be determined on a project specific basis.

4) Will the proposal require surface water withdrawals or diversions? Give general description, purpose, and approximate quantities if known.

To be determined on a project specific basis.

5) Does the proposal lie within a 100-year floodplain? If so, note location on the site plan.

To be determined on a project specific basis.

6) Does the proposal involve any discharges of waste materials to surface waters? If so, describe the type of waste and anticipated volume of discharge.

To be determined on a project specific basis.

b. Ground:

1) Will ground water be withdrawn, or will water be discharged to ground water? Give general description, purpose, and approximate quantities if known.

To be determined on a project specific basis.

2) Describe the general size of the system, the number of such systems, the number of houses to be served (if applicable), or the number of animals or humans the system(s) are expected to serve.

To be determined on a project specific basis.

3) Proposed measures to reduce or control surface, ground, and runoff water impacts, if any.

To be determined on a project specific basis.

c. Water runoff (including stormwater):

1) Describe the source of runoff (including storm water) and method of collection and disposal, if any (include quantities, if known). Where will this water flow? Will this water flow into other waters? If so, describe.

To be determined on a project specific basis.

2) Could waste materials enter ground or surface waters? If so, generally describe.

To be determined on a project specific basis.

4) Proposed measures to reduce or control surface, ground, and runoff water impacts, if any:

To be determined on a project specific basis.

4. Plants

a. Check types of vegetation found on the site:

☐ Deciduous tree: Hemlock, yew, alder, apple, cherry, and maple.
☐ Evergreen tree: Douglas fir, cedar, pine, spruce
☐ Shrubs
☐ Grass
☐ Pasture
☐ Crop or grain
☐ Wet soil plants: cattail, buttercup, bullrush, skunk cabbage, other
☐ Water plants: water lily, eelgrass, milfoil, other
☐ Other types of vegetation: Foxglove, lupine, paintbrush, berries, ferns, moss and lichens
☒ To be determined on a project specific basis.

b. What kind and amount of vegetation will be removed or altered?

To be determined on a project specific basis.

c. List threatened or endangered species known to be on or near the site.

To be determined on a project specific basis.

d. Proposed landscaping, use of native plants, or other measures to preserve or enhance vegetation on the site, if any.

To be determined on a project specific basis.

5. Animals

a. Check any birds and animals which have been observed on or near the site or are known to be on or near the site:

☐ Birds: ducks, geese, osprey, great blue heron, turkey vulture, bald eagle.
☐ Mammals:
☐ Fish:
☒ To be determined on a project specific basis.

b. List any threatened or endangered species known to be on or near the site.

To be determined on a project specific basis.

c. Is the site part of a migration route? If so, explain.

The entire Puget Sound basin is a part of the Pacific Flyway.

d. Proposed measures to preserve or enhance wildlife, if any:

None required.

6. Energy and Natural Resources

a. What kind of energy (electric, natural gas, oil, wood stove, solar) will be used to meet the completed project's energy needs? Describe whether it will be used for heating, manufacturing, etc.

To be determined on a project specific basis.

b. Would your project affect the potential use of solar energy by adjacent properties? If so, generally describe.

To be determined on a project specific basis.

c. What kind of energy conservation features are included in the plans of this proposal? List other proposed measures to control energy impacts, if any.

To be determined on a project specific basis.

7. Environmental Health

a. Are there any environmental health hazards, including exposure to toxic chemicals, risk of fire and explosion, spill, or hazardous waste, that could occur as a result of this proposal? If so, describe.

To be determined on a project specific basis.

1) Describe special emergency services that might be required.

To be determined on a project specific basis.

2) Proposed measures to reduce or control environmental health hazards, if any.

None required.

8. Noise

1) What types of noise exist in the area which may affect your project (for example: traffic, equipment, operation, other)?

To be determined on a project specific basis.

2) What types and levels of noise would be created by or associated with the project on a short-term or a long-term basis (for example: traffic, construction, operation, other)? Indicate what hours noise would come from the site.

To be determined on a project specific basis.

3) Proposed measures to reduce or control noise impacts, if any:

None required.

9. Land and Shoreline Use

a. What is the current use of the site and adjacent properties?

Existing land use is a mix of low density urban residential with some commercial, in North Bend and rural in unincorporated County.

b. Has the site been used for agriculture? If so, describe.

No.

c. Describe any structures on the site.

To be determined on a project specific basis.

d. Will any structures be demolished? If so, what?

To be determined on a project specific basis.

e. What is the current zoning classifications of the site?

To be determined on a project specific basis.

f. What is the current comprehensive plan designation of the site?

To be determined on a project specific basis.

g. If applicable, what is the current shoreline master program designation of the site?

To be determined on a project specific basis.

h. Has any part of the site been classified as an “environmentally sensitive” area? If so, specify.

To be determined on a project specific basis.

i. Approximately how many people would reside or work in the completed project?

To be determined on a project specific basis. The Plan presents existing and projected future populations within the Sallal service area.

j. Approximately how many people would the completed project displace?

None.

k. Proposed measures to avoid or reduce displacement impacts, if any:

None required.

l. Proposed measures to ensure the proposal is compatible with existing and projected land uses and plans, if any.

To be determined on a project specific basis.

10. Housing

a. Approximately how many units would be provided, if any? Indicate whether high, middle, or low-income housing.

None.

b. Approximately how many units, if any, would be eliminate? Indicate whether high, middle, or low-income housing.

None.

c. Proposed measures to reduce or control housing impacts, if any?

None required.

11. Aesthetics

a. What is the tallest height of any proposed structure(s), not including antennas; what is the principal exterior building material(s) proposed?

To be determined on a project specific basis.

b. What views in the immediate vicinity would be altered or obstructed:

To be determined on a project specific basis.

c. Proposed measures to reduce or control aesthetic impacts, if any.

None required.

12. Light and Glare

a. What type of light or glare will be proposal produce? What time of day would it mainly occur?

To be determined on a project specific basis.

b. Could light and glare from the finished project be a safety hazard or interfere with views?

To be determined on a project specific basis.

c. What existing off-site sources of light or glare may affect your proposal?

To be determined on a project specific basis.

d. Proposed measures to reduce or control light and glare impacts, if any:

None required.

13. Recreation

a. What designated and informal recreational opportunities are in the immediate vicinity?

To be determined on a project specific basis.

b. Would the proposed project displace any existing recreational uses? If so, describe.

To be determined on a project specific basis.

c. Proposed measures to reduce or control impacts on recreation, including recreation opportunities to be provided by the project or applicant, if any.

None required.

14. Historic and Cultural Preservation

a. Are there any places or objects listed on, or proposed for, national, state, or local preservation registers known to be on or next to the site? If so, generally describe.

None.

b. Generally describe any landmarks or evidence of historic, archaeological, scientific, or cultural importance known to be on or next to the site.

None.

c. Proposed measures to reduce or control impacts, if any.

None required.

15. Transportation

a. Identify public streets and highways serving the site, and describe proposed access to the existing street system. Show on site plans, if any.

To be determined on a project specific basis.

b. Is site currently served by public transit? If not, what is the approximate distance to the nearest transit stop?

To be determined on a project specific basis.

c. How many parking spaces would the completed project have? How many would the project eliminate?

To be determined on a project specific basis.

d. Will the proposal require any new roads or streets, or improvements to existing roads or streets, not including driveway? If so, generally describe (indicated whether public or private).

To be determined on a project specific basis.

e. Will the project use (or occur in the immediate vicinity of) water, rail, or air transportation? If so, generally describe?

To be determined on a project specific basis.

f. How many vehicle trips per day would be generated by the completed project? If known, indicate when peak volumes would occur.

To be determined on a project specific basis.

g. Proposed measures to reduce or control transportation impacts, if any.

To be determined on a project specific basis.

16. Public Services

a. Would the project result in an increased need for public services (for example: fire protection, police protection, health care, schools, other)? If so, generally describe.

To be determined on a project specific basis.

b. Proposed measures to reduce or control direct impacts on public services, if any.

To be determined on a project specific basis.

17. Utilities

a. Check utilities currently available at the site:

☐ Electricity
☐ Natural gas
☐ Water
☐ Refuse service
☐ Sanitary service
☐ Septic system
☐ Other:
☒ Not applicable

b. Describe the utilities that are proposed for the project, the utility providing the service, and the general construction on the site or in the immediate vicinity which might be needed.

To be determined on a project specific basis.

C. SIGNATURE

The above answers are true and complete to the best of my knowledge. I understand that the lead agency is relying on them to make its decision.

Signature: Warren [illegible]

Date Submitted: 1/11/20

D. SUPPLEMENTAL SHEET FOR NONPROJECT ACTIONS

(Do not use this sheet for project actions.)

Because these question are very general, it may be helpful to read them in conjunction with the list of the elements of the environment.

When answering these questions, be aware of the extent of the proposal, or the types of activities likely to result from the proposal, would affect the item in a greater intensity or at a faster rate than if the proposal were not implemented. Respond briefly and in general terms.

1. How would the proposal be likely to increase discharge to water; emissions to air; production, storage, or release of toxic or hazardous substances; or production of noise?

   To be determined on a project specific basis.

   Proposed measures to avoid or reduce such increases are:

   To be determined on a project specific basis.

2. How would the proposal be likely to affect plants, animals, fish, or marine life?

   Unknown at this time.

   Proposed measures to protect or conserve plants, animals, fish, or marine life are:

   If threatened or endangered plant, animal, fish or marine species are discovered during construction, all work will cease until the Department of Fish and Wildlife or the Department of Natural Resources can be contacted and an expert brought on to the site.

3. How would the proposal be likely to deplete energy or natural resources?

   To be determined on a project specific basis.

   Proposed measures to protect or conserve energy and natural resources area:

   To be determined on a project specific basis.

4. How would the proposal be likely to use or affect environmentally sensitive areas or area designated (or eligible or under study) for governmental protection; such as parks, wilderness, wild and scenic rivers, threatened or endangered species habitat, historic or cultural sites, wetlands, floodplains, or prime farmlands?

   To be determined on a project specific basis.

   Proposed measures to protect such resources or to avoid or reduce impacts are:

   To be determined on a project specific basis.

5. How would the proposal be likely to affect land and shoreline use, including whether it would allow or encourage land or shoreline uses compatible with existing plans?

   To be determined on a project specific basis.

   Proposed measures to avoid or reduce shoreline and land use impacts are:

   To be determined on a project specific basis.

6. How would the proposal be likely to increase demands on transportation or public services and utilities?

   To be determined on a project specific basis.

   Proposed measures to reduce or respond to such demand(s) are:

   To be determined on a project specific basis.

7. Identify, if possible, whether the proposal may conflict with local, state, or federal laws or requirements for the protection of the environment.

   To be determined on a project specific basis.

WAC 197-11-970 Determination of Nonsignificance (DNS).

DETERMINATION OF NONSIGNIFICANCE

Description of proposal:

Adoption of Comprehensive Water System Plan

Proponent: **Sallal Water Association**

Location of proposal, including street address, if any:

Lead Agency: **King County**

The lead agency for this proposal has determined that it does not have a probable significant adverse impact on the environment. An environmental impact statement (EIS) is not required under RCW 43.21C.030 (2)(c). This decision was made after review of a completed environmental checklist and other information on file with the lead agency. This information is available to the public on request.

☐ There is no comment period for this DNS.

☐ This DNS is issued after using the optional DNS process in WAC 197-11-355. There is no further comment period on the DNS.

☐ This DNS is issued under WAC 197-11-340(2); the lead agency will not act on this proposal for 14 days from the date below.

Comments must be submitted by: (not applicable)

Responsible official: ______________________________

Position/Title: ______________________ Phone: ______________

Address: ______________________________

Date: ____________ Signature: ______________________________

Washington State Department of Health
Division of Environmental Health
Office of Drinking Water

ATTACHMENT A

Local Government Consistency Determination Form

Water System Name: Sallal Water Association PWS ID: 75560Q

Planning/Engineering Document Title: Water System Plan Plan Date: January 2020

Local Government with Jurisdiction Conducting Review: King County

Before the Department of Health (DOH) approves a planning or engineering submittal under Section 100 or Section 110, the local government must review the documentation the municipal water supplier provides to prove the submittal is consistent with **local comprehensive plans, land use plans and development regulations** (WAC 246-290-108). Submittals under Section 105 require a local consistency determination if the municipal water supplier requests a water right place-of-use expansion. The review must address the elements identified below as they relate to water service.

By signing this form, the local government reviewer confirms the document under review is consistent with applicable local plans and regulations. If the local government reviewer identifies an inconsistency, he or she should include the citation from the applicable comprehensive plan or development regulation and explain how to resolve the inconsistency, or confirm that the inconsistency is not applicable by marking N/A. See more instructions on reverse.

Local Government Consistency Statement	**For use by water system** Identify the page(s) in submittal	**For use by local government** Yes or Not Applicable
a) The water system service area is consistent with the adopted land use and zoning within the service area.	Fig 1-7 P 2-10, 11	
b) The growth projection used to forecast water demand is consistent with the adopted city or county's population growth projections. If a different growth projection is used, provide an explanation of the alternative growth projection and methodology.	P 2-12, 13	
c) For cities and towns that provide water service: All water service area policies of the city or town described in the plan conform to all relevant utility service extension ordinances.		Not Applicable
d) Service area policies for new service connections conform to the adopted local plans and adopted development regulations of all cities and counties with jurisdiction over the service area.	P 1-19,20	
e) Other relevant elements related to water supply are addressed in the water system plan, if applicable. This may include Coordinated Water System Plans, Regional Wastewater Plans, Reclaimed Water Plans, Groundwater Management Area Plans, and the Capital Facilities Element of local comprehensive plans.	P 1-17, 18	

I certify that the above statements are true to the best of my knowledge and that these specific elements are consistent with adopted local plans and development regulations.

Signature Date

Printed Name, Title, & Jurisdiction

Consistency Review Guidance

For Use by Local Governments and Municipal Water Suppliers

This checklist may be used to meet the requirements of WAC 246-290-108. When using an alternative format, it must describe all of the elements; 1a), b), c), d), and e), when they apply.

For **water system plans (WSP)**, a consistency review is required for the service area and any additional areas where a municipal water supplier wants to expand its water right's place of use.

For **small water system management programs**, a consistency review is only required for areas where a municipal water supplier wants to expand its water right's place-of-use. If no water right place-of-use expansion is requested, a consistency review is not required.

For **engineering documents,** a consistency review is required for areas where a municipal water supplier wants to expand its water right's place-of-use (water system plan amendment is required). For noncommunity water systems, a consistency review is required when requesting a place-of-use expansion. All engineering documents must be submitted with a service area map (WAC 246-290-110(4)(b)(ii)).

A) Documenting Consistency: The planning or engineering document must include the following when applicable.

a) A copy of the adopted **land use/zoning** map corresponding to the service area. The uses provided in the WSP should be consistent with the adopted land use/zoning map. Include any other portions of comprehensive plans or development regulations that relate to water supply planning.

b) A copy of the **growth projections** that correspond to the service area. If the local population growth projections are not used, explain in detail why the chosen projections more accurately describe the expected growth rate. Explain how it is consistent with the adopted land use.

c) Include water service area policies and show that they are consistent with the **utility service extension ordinances** within the city or town boundaries. *This applies to cities and towns only.*

d) All **service area policies** for how new water service will be provided to new customers.

e) **Other relevant elements** the Department of Health determines are related to water supply planning. See Local Government Consistency – Other Relevant Elements, Policy B.07, September 2009.

B) Documenting an Inconsistency: Please document the inconsistency, include the citation from the comprehensive plan or development regulation, and explain how to resolve the inconsistency.

C) Documenting a Lack of Local Review for Consistency: Where the local government with jurisdiction did not provide a consistency review, document efforts made and the amount of time provided to the local government for review. Please include: name of contact, date, and efforts made (letters, phone calls, and emails). To self-certify, please contact the DOH Planner.

Washington State Department of Health
Division of Environmental Health
Office of Drinking Water

ATTACHMENT A

Local Government Consistency Determination Form

Water System Name: Sallal Water Association PWS ID: 75560Q

Planning/Engineering Document Title: Water System Plan Plan Date: January 2020

Local Government with Jurisdiction Conducting Review: City of North Bend

Before the Department of Health (DOH) approves a planning or engineering submittal under Section 100 or Section 110, the local government must review the documentation the municipal water supplier provides to prove the submittal is consistent with **local comprehensive plans, land use plans and development regulations** (WAC 246-290-108). Submittals under Section 105 require a local consistency determination if the municipal water supplier requests a water right place-of-use expansion. The review must address the elements identified below as they relate to water service.

By signing this form, the local government reviewer confirms the document under review is consistent with applicable local plans and regulations. If the local government reviewer identifies an inconsistency, he or she should include the citation from the applicable comprehensive plan or development regulation and explain how to resolve the inconsistency, or confirm that the inconsistency is not applicable by marking N/A. See more instructions on reverse.

Local Government Consistency Statement	For use by water system Identify the page(s) in submittal	For use by local government Yes or Not Applicable
a) The water system service area is consistent with the adopted land use and zoning within the service area.	Fig 1-7 P 2-10, 11	
b) The growth projection used to forecast water demand is consistent with the adopted city or county's population growth projections. If a different growth projection is used, provide an explanation of the alternative growth projection and methodology.	P 2-12, 13	
c) For cities and towns that provide water service: All water service area policies of the city or town described in the plan conform to all relevant utility service extension ordinances.		Not Applicable
d) Service area policies for new service connections conform to the adopted local plans and adopted development regulations of all cities and counties with jurisdiction over the service area.	P 1-19,20	
e) Other relevant elements related to water supply are addressed in the water system plan, if applicable. This may include Coordinated Water System Plans, Regional Wastewater Plans, Reclaimed Water Plans, Groundwater Management Area Plans, and the Capital Facilities Element of local comprehensive plans.	P 1-17, 18	

I certify that the above statements are true to the best of my knowledge and that these specific elements are consistent with adopted local plans and development regulations.

Signature Date

Printed Name, Title, & Jurisdiction

ATTACHMENT A

Consistency Review Guidance

For Use by Local Governments and Municipal Water Suppliers

This checklist may be used to meet the requirements of WAC 246-290-108. When using an alternative format, it must describe all of the elements; 1a), b), c), d), and e), when they apply.

For **water system plans (WSP)**, a consistency review is required for the service area and any additional areas where a municipal water supplier wants to expand its water right's place of use.

For **small water system management programs**, a consistency review is only required for areas where a municipal water supplier wants to expand its water right's place-of-use. If no water right place-of-use expansion is requested, a consistency review is not required.

For **engineering documents,** a consistency review is required for areas where a municipal water supplier wants to expand its water right's place-of-use (water system plan amendment is required). For noncommunity water systems, a consistency review is required when requesting a place-of-use expansion. All engineering documents must be submitted with a service area map (WAC 246-290-110(4)(b)(ii)).

A) Documenting Consistency: The planning or engineering document must include the following when applicable.

a) A copy of the adopted **land use/zoning** map corresponding to the service area. The uses provided in the WSP should be consistent with the adopted land use/zoning map. Include any other portions of comprehensive plans or development regulations that relate to water supply planning.

b) A copy of the **growth projections** that correspond to the service area. If the local population growth projections are not used, explain in detail why the chosen projections more accurately describe the expected growth rate. Explain how it is consistent with the adopted land use.

c) Include water service area policies and show that they are consistent with the **utility service extension ordinances** within the city or town boundaries. *This applies to cities and towns only.*

d) All **service area policies** for how new water service will be provided to new customers.

e) **Other relevant elements** the Department of Health determines are related to water supply planning. See Local Government Consistency – Other Relevant Elements, Policy B.07, September 2009.

B) Documenting an Inconsistency: Please document the inconsistency, include the citation from the comprehensive plan or development regulation, and explain how to resolve the inconsistency.

C) Documenting a Lack of Local Review for Consistency: Where the local government with jurisdiction did not provide a consistency review, document efforts made and the amount of time provided to the local government for review. Please include: name of contact, date, and efforts made (letters, phone calls, and emails). To self-certify, please contact the DOH Planner.

APPENDIX M

RECLAIMED WATER CHECKLIST

ATTACHMENT A
For questions, call Kristina Westbrook,
King County Reclaimed Water Program Manager at (206) 296-5279
www.kingcounty.gov/reclaimedwater

King County

Water Reclamation Evaluation Checklist
For Systems with 1,000 or more Connections

Please use this checklist, including the inventory template, to ensure that your water system plan includes sufficient information about opportunities for reclaimed water and your system's efforts to develop those opportunities. If a question is not applicable or the information is unavailable, then answer, "unknown" or "n/a." King County will consider the checklist completed if each answer is filled in with the best available information, even if the utility states that it is not aware of any reclaimed water opportunities within its service area.

The County and State recognize that changing conditions could initiate a need to respond in new ways to future water quality standards, wastewater discharge requirements, take advantage of advances in treatment technologies and/or allow our region to be positioned to respond to changes associated with climate change and population growth.

In 2003, Chapter 90.46 of the Revised Code of Washington (RCW) was amended to require public water systems serving 1,000 or more connections to evaluate opportunities for reclaimed water when completing their water system plans. Please use this checklist to meet King County consistency requirements in responding to this legislation.

Water System Name: Sallal Water Association
Date: July 24, 2019
PWS ID# 75560Q
Contact: Ted Stonebridge

1. **Identifying Potential Future Demand for Reclaimed Water:** King County maintains a database and map of potential reclaimed water users for evaluating future projects. Please use the template below, or similar table, to provide information to assist King County in further researching these potential uses.
   - **Large Utility Water Users** (choose one):
     - ☐ Attached is an inventory of twenty large (above 20,000 gallons/month on average), non single-family residential, water users served by our utility that have a potential for reclaimed water use, or
     - ☐ Attached is an inventory of our utility's top twenty water users, or
     - ☑ The information requested is unknown or not available.

       Additional Comments: ______
   - **Large Self Suppliers** (choose one):
     - ☑ Attached is an inventory of large, self-supplied water users within our water utility's service boundaries - especially those near wastewater treatment plants, mainlines, outfalls, and pump stations or similar reclaimed water facilities), or
     - ☐ The information requested is unknown or not available.

       Additional Comments: ______
   - **Other** (choose one):
     - ☐ Attached is an inventory of other water users (such as those that are clustered near one another and could be served by a single system) that may be likely candidates for reclaimed water use, or
     - ☑ The information requested is unknown or not available.

       Additional Comments: ______

2. **Environmental Commitment**: Are you a city/town, or providing water service to a city/town, that has made commitments within resource management plans, salmon recovery plans, or other environmental initiatives for which there is a potential opportunity for using reclaimed water to assist in meeting commitments? (choose one)

☐ Yes, here are plans that have potential for reclaimed water use in our service area to meet the above commitments:

____

____

☑ The information requested is unknown, not available.
Additional Comments: ______________________________

3. **Identifying Areas of Potential Use of Reclaimed Water for Environmental Benefit:**
Below are ***examples*** of uses of reclaimed water ***that comply with State, Federal and other reclaimed water environmental, health and safety standards***. All of these uses are currently in effect somewhere in Washington State. To the best of your knowledge, are any of these potential uses for reclaimed water applicable to your area?

River Augmentation (choose one):

☑ Yes, our water rights are limited by instream flows. For more information, King County may contact:

____

____

☐ The information requested is unknown, or not available.
Additional Comments: ______________________________

Groundwater Recharge (choose one):

☐ Yes, we withdraw water from an aquifer that is in a groundwater management area, or from a declining aquifer, where water levels may need to be replenished or to maintain aquifer storage. For more information, King County may contact:

____

☑ The information requested is unknown, or not available.
Additional Comments: ______________________________

Water Rights Mitigation (choose one):

☐ Yes, our area is pursuing, or planning to pursue, new or additional water rights, and there may be an opportunity to use reclaimed water for mitigation of those new water rights. For more information, King County may contact:

____

☑ The information requested is unknown, or not available.
Additional Comments: ______________________________

Potential Areas of Environmental Need (choose one):

☐ Yes, parts of our service area include potential environmental enhancement locations, such as wetlands enhancement, aquifer recharge, stream flow augmentation, that might be candidates for reclaimed water use. For more information, King County may contact:

____

☑ The information requested is unknown, or not available.
Additional Comments: ______________________________

4. **Local Reclaimed Water Legislation**: If water reclamation is mandated for this water system through local government agreement, contract, local regulations, ordinances, or other mechanisms, please provide a copy of the governing mechanism (choose one).

   ☐ Yes, local legislation exists in our area in support of reclaimed water use. The following relevant legislation is attached (please list titles of documents):

   ____

   ____

   ☑ No water reclamation legislation exists, or is known to exist, at a local level in our service area.

5. **Coordination with Local Wastewater Utility:** Include a brief description of your interactions with any wastewater or reclaimed water utility (King County or other) adjacent to your service area to evaluate any potential opportunities to develop reclaimed water (choose one).

   ☑ Describe if applicable:

   ____

   ____

   ☐ None. Additional Comments: ______________________________

Template for
Inventory of Water Users and Identification of Potential Reclaimed Water Users

Site Owner or Site Name	Site Address (for general mapping purposes)	Estimated Annual Water Use	Water uses not requiring potable water[1]	Is this a Potential Reclaimed Water Customer?

[1] See Washington State Reclamation and Reuse Standards, September 1997, Section 1, Articles 1-5 for allowable uses of reclaimed water. http://www.ecy.wa.gov/PROGRAMS/WQ/reclaim/standards.html

ATTACHMENT A

Top 10 Users

Name	Address	Gal/day	Gal/yr	Water Uses not requring Potable Water	Is this a Potential Reclaimed Water Customer
Twin Falls Middle School - Irrigation	46910 SE Middle Fork Road, North Bend	4,106	1,498,690	landscape irrigation	N
Edgewick Inn (Korchina Co)	14600 468th Ave SE	2,553	931,845		N
Terex USA		2,008	732,920		N
Cottages at North Bend (HOA) - Irrigation Meter	Haystack Ave SE, North Bend	1,944	709,560	landscape irrigation	N
Edwin Opstad Elementary School	1345 Stilson Ave SE, North Bend	1,473	537,645		N
Creekside Land Company		1,396	509,540		N
Snoqualmie Valley Property Management		1,356	494,940		N
Twin Falls Middle School	46910 SE Middle Fork Road, North Bend	1,297	473,405		N
Residential Customer	--	1,177	429,605		N
Quinton, LLC		1,163	424,495		N

Self Suppliers - Group A

Mt Si Mobile Home Park	43010 SE North Bend Way, North Bend	
Riverbend Homeowners Association	P.O. Box 1075 Snoqualmie, WA	(location - 437th Ave SE to 450th Pl SE - Se 144th St to SE 151st St)
Travel Centers of America (Trucktown)	46600 SE North Bend Way, North Bend	

APPENDIX N

EMERGENCY RESPONSE PLAN

ATTACHMENT A

SALLAL WATER ASSOCIATION

KING COUNTY **WASHINGTON**

EMERGENCY RESPONSE PLAN

DENNY SCOTT
INTERIM GENERAL MANAGER

G&O #17462
SEPTEMBER 2020

Gray & Osborne, Inc.
CONSULTING ENGINEERS

TABLE OF CONTENTS

LIST OF TABLES

LIST OF FIGURES

APPENDIX

INTRODUCTION

This Emergency Response Plan is written to assist Salla Water Association (SWA) in the event of an emergency. It was developed using guidance from state, federal, and AWWA documents, and from discussion with SWA staff regarding realistic and reasonable desired response. The intent is to provide a brief reference document that can be used to help SWA personnel work through an emergency while supplying information to the public in a clear and concise manner, and cooperating with other agencies. SWA will strive to avoid emergencies through the use of Best Management Practices, but ultimately an emergency will occur.

The federal government has identified five steps in emergency planning and response:

1. Prevention – Those capabilities necessary to avoid, prevent, or stop a threatened or actual act of terrorism.

2. Protection – Those activities that decrease the likelihood that an emergency will occur.

    - SWA Action – Strive for continued improvement to provide high quality potable water in a safe and reliable manner. This includes:

        - Updating and revising the SWA construction standards as necessary
        - Tracking maintenance and replacement of system assets.

3. Mitigation – Coordination of emergency response to reduce loss of life and property damage by lessening the impact of a disaster.

    - SWA Action – Implementation and periodic update of this Manual

4. Response – Describes specific actions to save lives, prevent illness, and protect property and the environment.

    - SWA Action – Implementation and periodic update of this Manual.

5. Recovery – How best to restore, redevelop and revitalize the health, social, economic, natural, and environmental fabric of the community.

Item 1 is a law enforcement item, and not within SWA's purview except for reporting suspicious activities to the appropriate law enforcement authority. Item 5 is focused on the long-term restoration of the community as the result of a large-scale event. Item 5 will require input from the members and local agencies, and will require adaptive management depending upon the nature of the emergency and the immediate short-term response.

The Emergency Response Plan is targeted to ensure that:

- If drinking water is contaminated, public notice is provided quickly and completely, and that corrective actions are undertaken immediately to restore water quality.
- If a seismic or other natural event occurs, the system's integrity can be assessed quickly prioritizing critical components followed by a thorough system evaluation.
- If there is a major water main break, it may be located and repaired as quickly and efficiently as practicable while preserving water quality integrity.

PAST EMERGENCIES

The water quality violation and subsequent boil water notice in September 2019 challenged SWA's response. Potential improvements include:

1. Improved message distribution to members.
2. A clear and concise presentation of the location of SWA is needed to reduce public phone calls from outside of SWA boundaries. Utilize the Emergency Response Map – send it to news outlets.

STAFF ORGANIZATION

INCIDENT COMMANDER

Description

The SWA Manager, currently Denny Scott, will be the Incident Commander. He will be responsible for all communication to the press and public and for all field tasks. With input from the Washington State Department of Health (WDOH), SWA staff and selected SWA Board members, he will develop the message to be delivered to the public.

Actions

The Incident Commander will be responsible for:

- Formulation all information disseminated to the press and public, with input from staff and other local agencies.

- Identifying if direct communication to customers via door hangars is necessary. Calling adjacent jurisdictions to request assistance to implement this task.

- Coordinate all field response activities, based upon his knowledge of the system, and input from field staff.

- Promptly identify needs and request backup support from other jurisdictions and water purveyors. Be specific about requests. Rather than requesting "personnel" and "supplies," specify what types of each are needed and in what quantities. The manager should use personal contacts to his advantage.

The Incident Commander must rely on key staff. He should not participate in field activities. The Field Manager will undoubtedly need help in the field. The Incident Commander must resist the urge to physically assist. Personnel requested through the Mutual Aid agreements should be used to assist in the field.

OFFICE MANAGER

Description

The SWA Office Manager, currently Lisa Hagen, will be responsible for managing assistants in the office and ordering supplies as needed. The Office Manager needs to assure consistent messaging to the public.

Actions

The Office Manager will be responsible for:

- Updating the website periodically throughout the emergency.

- Accessing and implementing the accessing the King County emergency response and messaging system.

- Assisting with telephone calls and other forms of communication.

- Ordering supplies such as bottled water.

- Assisting the Incident Commander to synthesize information from the field as it comes in.

FIELD MANAGER

Description

The Field Manager, currently Tree Bergman, will be responsible for implementing field operations as directed by the Incident Commander. The Field Manager will need to be communicating frequently with the Incident Commander to apprise him of conditions in the field, particularly if they are changing. The Field Manager should err on the side of "over-communicating" to the Incident Commander. He is the "eyes" of the District during the emergency.

Actions

The Field Manager will be responsible for:

- Assessing the situation and taking immediate actions, such as closing valves, isolating portions of the system, and if a water quality emergency, identifying potential locations of contamination.

- Reporting back to the Incident Commander regarding the situation and what action has been taken, if any.

- If water quality sampling is required, he shall complete that sampling unless SWA's water quality sampling contractor, Water Management Lab, is available to obtain samples. Samples should be collected in a timely manner to avoid costly delays in bringing the system to full working order.

The Field Manager should work with other agency staff provided to SWA, as directed by the Incident Commander, to mitigate and resolve the emergency.

The Field Manager should be reasonably "tight lipped" regarding dissemination of information to the public. If asked a question, answer courteously but with a brief response and refer the questioner to the call-in number at the SWA office. The intent is to limit multiple lines of communication and thus keep the message from SWA consistent.

Table 1 presents a brief summary of the SWA key facilities and personnel.

TABLE 1

Brief System Description

System Name and Address	Sallal Water Association 44021 SE Tanner Road North Bend, Washington 98045	425-888-3650
System ID #	75560Q	
Website	www.sallal.com	
Service Area	SWA serves the easterly portion of the City of North Bend, and areas North, south and east of North Bend in unincorporated King County. See map (Figure 2)	
Brief System Description	The SWA system consists of three active production wells, a three booster stations, 10 reservoirs at six sites and the water main distribution system which includes 26 pressure reducing valve stations. Flow-paced chlorine facilities are located at each wellhead. Pressure ranges from approximately 35 psi to 105 psi. Under normal conditions, each of Wells 1 and 2 pump to the distribution system which supplies water to the Rattlesnake and Uplands Reservoirs if supply exceeds demand. Water from Well 2 flows through 24-inch water main to provide a CT of 6 for chlorine disinfection. Water flows from the reservoirs down to the valley and then east to the Tanner Booster station. The Tanner booster station and Well 3 pump to the distribution system at the east end of the system. If supply exceeds demand the Edgewick reservoirs will fill. The Lower Mt. Si Booster Station fills the River Point reservoir via the distribution system. The River Point booster station fills the Terrell Reservoir via the distribution system from which it flows to the system. The Edgewick Booster Station supplies water to the Middle Fork reservoirs and the 920 zone, a closed zone.	
Population Served	6,400 (as of 2018)	

TABLE 2

Key Contacts

Association Manager	Denny Scott	425-888-3650 (W)
Incident Commander	Denny Scott	425-531-0518 (C)
Office Manager	Lisa Hagen	425-888-3650 (W)
Field Manager	Tree Bergman	425-445-7399 (C)
District Engineer	Warren Perkins, P.E., Gray & Osborne, Inc.	206-284-0860 (W) 206-930-5548 (C)

POTENTIAL EMERGENCIES

There are many potential emergency scenarios. However, three potential emergencies that may cover most types of scenarios include:

1. Water Quality Violation – Public Boil Water Notice
2. Earthquake – Loss of storage and fire flow
3. Water Main Break – Loss of system pressure in the entire system or locally

For recommended response to these type of emergencies Appendix A.

WATER QUALITY VIOLATION

In the event of a water quality violation, notify WDOH if applicable (Figure 1). An acute water quality violation may result depending upon results of subsequent sampling rounds (Figure 1). If an acute water quality violation occurs, this Emergency Plan should be implemented. Figure 1 may need to be updated periodically to be consistent with the most recent WDOH protocol.

If WDOH confirms that a water quality violation has occurred, others on the emergency list must be contacted. A Contact List is presented in the Appendix.

The following actions should be taken:

1. Work with the WDOH and King County to develop language for a press release. Send the appropriate language to the news agencies, **including the "Generalized Location Map"** below. Include the SWA website address for the news agencies to communicate to the public.

2. Contact King County emergency response and messaging and provide impacted area and language for their recording to be sent to SWA customers.

3. Contact Ames Lake Water Association and the City of North Bend. Request emergency aid to notify SWA customers using door hangers.

4. Post the notification of the boil water on the SWA website. The website should be updated daily, preferably twice daily, to keep customers abreast of the situation.

5. Contact bottled water distributors to provide bottled water to SWA for the period that the boil water notice is in place.

6. Work with WDOH to adjust chlorine dosing as needed. (A chlorine dosing worksheet is provided after Figure 1.)

7. Sample the raw water from the wells upstream of the chlorine injection.

8. Begin Unidirectional Flushing (UDF). Start upstream of the violation and work downstream. The intent is to draw the fresh water into and remove "bad" water from the area of concern quickly.

9. Upon completion of the UDF for the area of concern, sample the water system. Take samples to the laboratory.

10. In order to return the system to normal operation as soon as possible, if sufficient time remains in the day to get a second round of samples to the laboratory, do so.

If a boil water notice is issued, two rounds of satisfactory samples are required in order to remove the boil water notice. A minimum of 2 hours between samples is needed between sample collection times for the samples to be considered as separate sample rounds.

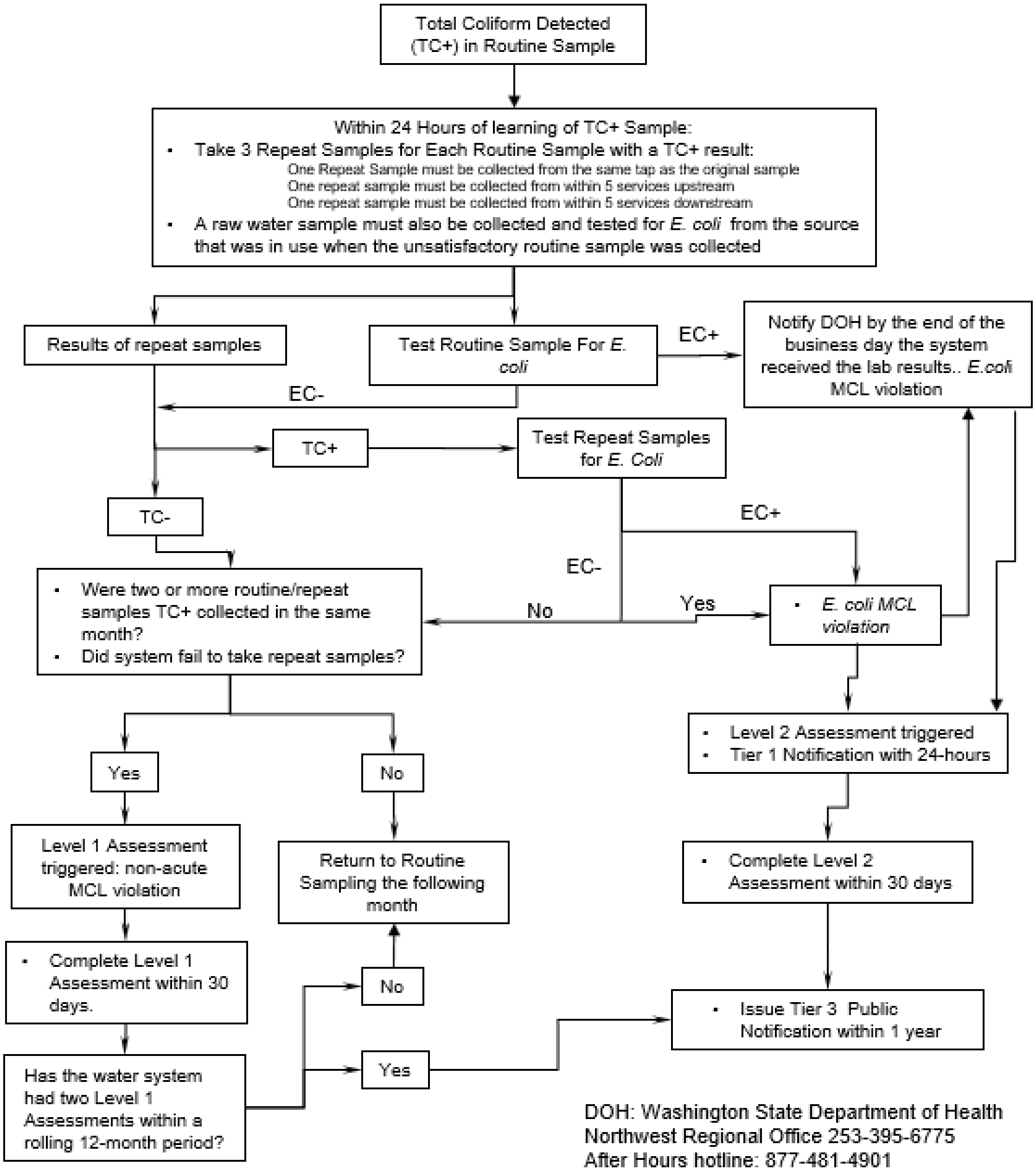

DOH: Washington State Department of Health
Northwest Regional Office 253-395-6775
After Hours hotline: 877-481-4901

FIGURE 1

Coliform Detection and Notification Flow Chart

The tables below provide summary calculations for dosing the source water at the wellheads and for dosing the reservoir. The conversion factors do NOT account for chlorine demand in the water or in the system. Historical information indicates the chlorine demand reduces chlorine residual concentration across the system by 0.2 mg/L. When the boil water notice has been lifted, the dose may be reduced. SWA will need to discuss required chlorine residual with WDOH. The dose rate and chlorine demand are similar regardless of which source well is used.

TABLE 3A

Chlorine Dosing Worksheet – Source Water and Reservoir – Source Water Chlorine Injection Dose Rate

	Well Flow Rate (gpm)	Desired Chlorine Residual Concentration in Water (mg/L)	Conversion Factor (X% Cl)[1]	Chlorine Solution (gal/hr)
Example	700 x	1.5 x	0.00042 (12.5%) =	0.44

(1) Conversion Factor:
- Use 0.0042 for 12.5 percent chlorine;
- Use 0.00092 for 6.25 percent chlorine; and
- Use 0.0015 for 5 percent Chlorine.

TABLE 3B

Chlorine Dosing Worksheet – Source Water and Reservoir – Reservoir Dosing

	Gallons in Reservoir	Desired Chlorine Residual (mg/L)	Conversion Factor[1]	% Chlorine[2]	Chlorine Solution (gal)	Granular Chlorine (lb)
Example	200,000 x	1.5 x	0.000083 ÷	12.5	2.0	
Example	200,000 x	1.5 x	0.00083 ÷	65		3.8

(1) Conversion Factor:
  a. Use 0.000083 for liquid chlorine (4 zeros 83); and
  b. Use 0.00083 for granular chlorine (3 zeros 83).

(2) Enter 5 percent chlorine as a 5 not 0.05. Enter 65 percent chlorine as 65, not 0.65.

EARTHQUAKE

Earthquake may cause:

- Well Damage:
    - Failure of well;
    - Pumping of turbid water; and
    - Reduced capacity.
- Reservoir Failure
- Water Main Break
- Fires
- Power Outage

In the event of an earthquake the following actions should be taken:

Damage Assessment

1. Visually check reservoirs from safe distance to see if any structural damage is noticed (use binoculars if available). Signs of failure include, leaks, wrinkled steel, stretched tie-down bolts, etc.

    a. If reservoir shows obvious signs of failure skip to Item 6.

    b. **DO NOT** climb reservoirs. There will be much to do for the initial reconnaissance,

2. If a reservoir shows signs of damage, isolate it.

3. Check the water levels in the reservoirs. Low water level may indicate a major leak or fire in the water system, or a leak in the piping to/from the reservoirs.

4. Call North Bend Police and Eastside Fire & Rescue for any reports of fire in the service area as that may be a cause of water level decline.

5. Check the booster stations to determine if the pumps are operating normally.

6. Check source water for turbidity:

   a. Turn on each well and visually observe the discharge for turbidity and flow rate during the flow-to-waste cycle. If the discharge water appears to be clear and the flow rate typical, leave the well in AUTO mode so that it may be called to service if needed.

   b. If the pumping rate appears to be reduced, the well may need to be taken offline to prevent damage to the pump.

   c. If the water from the well is noticeably turbid, allow it to pump to waste and watch for a decline in the turbidity to near normal levels. If the water does not clear up in a reasonable time, 10 to 15 minutes, turn off the well and leave it off. Move on to the next well.

7. Available field staff should complete a reconnaissance of the water system to see if any leaks or fires are visible. If leaks are visible, staff should report in and then isolate that portion of the system. Immediately "bag" any hydrants that are taken out of service.

Document System Condition

In the event of a significant earthquake, SWA may need to rely on its own staff to operate the system; adjacent purveyors may not be able to render assistance. After a damage assessment and potential isolation of portions of the system, the staff should meet. Record any damage to the system. Note the following:

1. Wells – for each well:

   a. Production rate;
   b. Visual water quality; and
   c. Chlorine injection on/off, dose rate.

2. Reservoirs – for each reservoir:

   a. Structural observations;
   b. Leaks;
   c. Water level; and
   d. Is the elevated reservoir still online?

3. Booster Pumps and Booster Pump Station:

   a. Visual condition of the pumps;
   b. Leaks in the booster station piping;
   c. Normal pump operation? If not normal what is the issue?
   d. Production rate from booster pumps normal?
   e. Is the booster pump station in "booster pump" mode and elevated reservoir is offline?

4. Distribution System – see Base Map (Figure 3):

   a. Leaks noted in water mains;
   b. Hydrants condition okay?
   c. Actions taken to isolate portions of the system.

Write down the locations and types of damaged infrastructure. What portions of the system may be operated without compromising Public Health? Is a boil water notice needed?

If the water in the system is turbid, work with WDOH and increase the chlorine dose rate. If that is not possible increase dose rate to maintain a chlorine residual of 1.5 mg/L and strongly consider issuing a boil water notice. Sampling may not be possible due to other demands on staff, or laboratories may be damaged and not able to handle demand for water quality analyses.

Prioritize the repairs to bring the system back up to normal operation.

The repairs should be prioritized to return the system to normal operation while maintaining system integrity and water quality. If areas of the distribution system have sustained substantial damage, restoration of service in a short period of time may not be possible. Consider providing temporary service with appropriate notice to customers.

If a reservoir is compromised, leave it offline. Consider draining it. There may be aftershocks and if the reservoir is damaged, it may be unable to withstand future shaking.

WATER MAIN BREAK

A water main break may cause:

- Loss of System Pressure

- Water Quality Violations

- Loss of Fire Flow
- Localized Flooding from Main Break

A water main break will generally be a localized problem. The extent of the impact on the system will in part depend upon when and where the break occurs. If SWA staff is notified by customers or other personnel of a water leak, it should be easy to quickly locate the leak and isolate that part of the system. If the leak occurs in a remote area of the system or after hours, it may go unnoticed until low-level conditions in the reservoir trip alarms.

If the alarms notify SWA staff of a low reservoir level, they should complete a windshield survey of the District to locate the water main break.

Once the leak is located and that area of the system isolated, SWA should undertake repairs and bring that portion of the system back online as soon as possible. For a significant water main break, repairs will likely include a section of pipe replacement and chlorination of the water system in the impacted area. Satisfactory water quality tests should be obtained prior to allowing the repaired area to be brought back online.

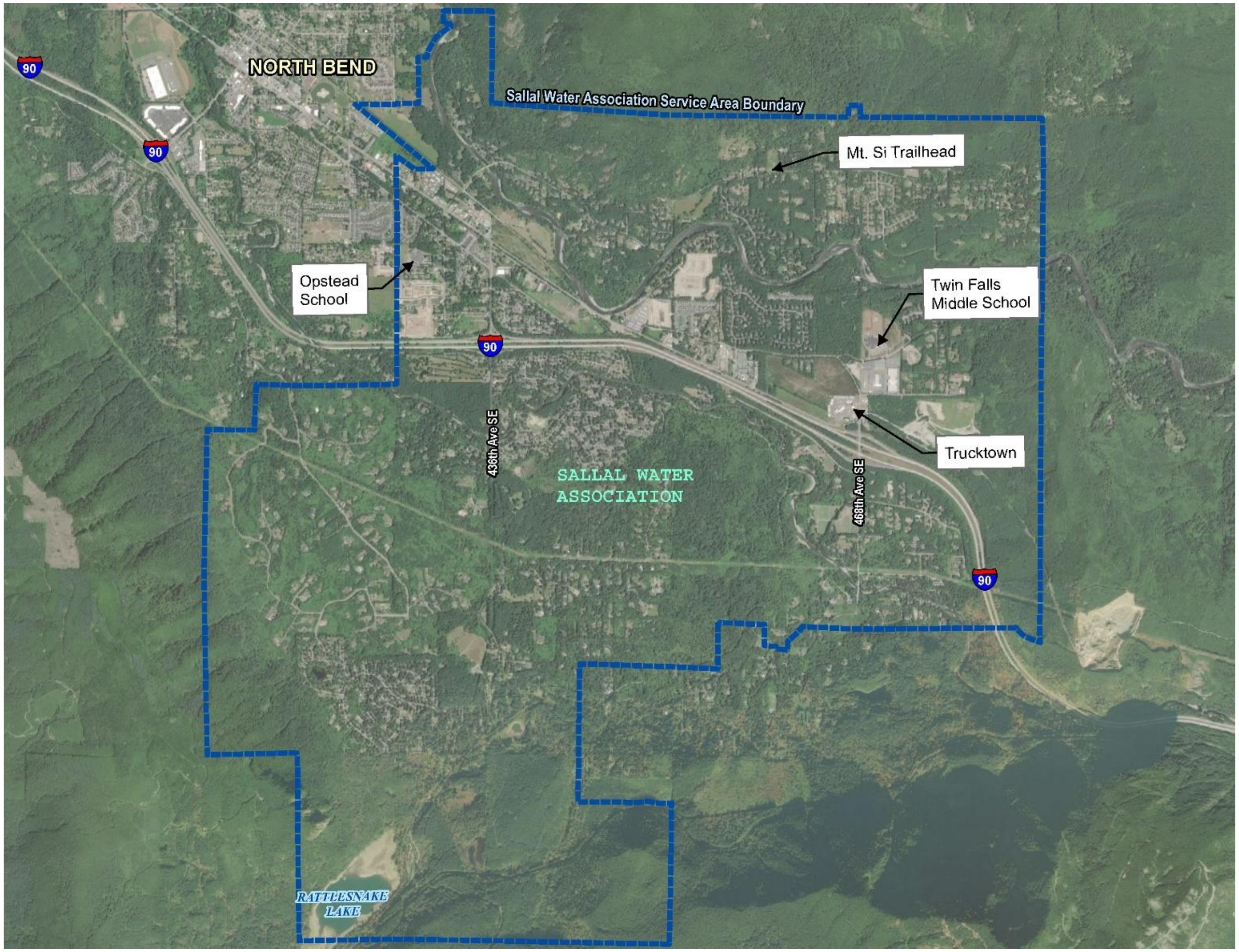

FIGURE 2

Generalized Sallal Water Association Location Map

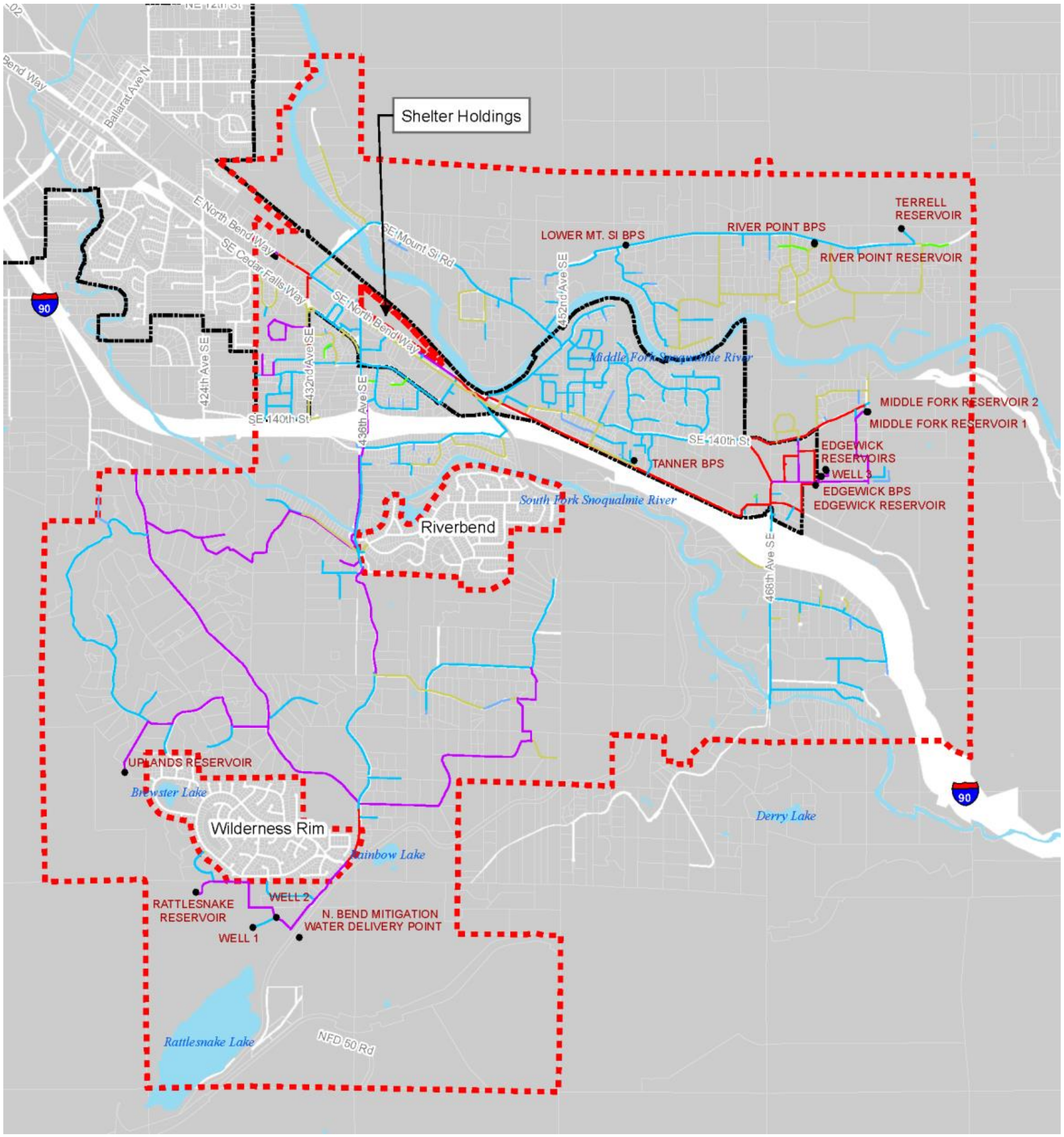

FIGURE 3

Water System Base Map

APPENDIX A

EMERGENCY CONTACT LIST

ATTACHMENT A

EMERGENCY CONTACT LIST

Agency/Group	Contact	Phone Number
King County Sheriff		1-425-888-4433
Eastside Fire & Rescue		1-425-392-3433
Sallal Water Association Office	Denny Scott	1-425-888-3650
Evergreen Rural Water		1-800-272-5981
DOH NW Office	Brietta Carter	1-253-395-6770
DOH NW After Hours		1-877-481-4901
Electrician	Cleeton Guldi	1-425-290-7803
Electric Utility	Tanner Electric	1-425-888-0623
Electric Utility	Puget Sound Energy	1-425-888-0623
Gas Utility	Puget Sound Energy	1-800-321-4123
Sewer Utility	City of North Bend	1-425-888-1211
Telephone Utility	Comcast	1-800-934-6489
Plumber	Mt. Si Plumbing	1-425-888-0433
Pumptech, Inc.	Pump specialist	1-425-644-8501
Soil Excavator/Backhoe Operator	Fury Construction	1-425-766-1889
Equipment Rental	R & R Rentals	1-425-888-1111
Equipment Rental (Portable Fencing)	All-Around Fence Co.	1-888-940-0022
Equipment Repair	Ackley Tool Co.	1-206-760-4325
Radio/Telemetry Repair	Blackfin Technologies	1-425-753-0891
Bottled Water	Crystal Springs	1-800-453-0293
Pipe Supplier	HD Fowler	1-425-746-8400
Leak Detection	American Leak	1-425-747-7118
State Wide One-Call	Utility Locates	1-800-424-5555
Gray & Osborne, Inc.	Seattle office	1-206-284-0860

LOCAL MEDIA OUTLETS

Television		
KING 5	newstips@king5.com	206-448-3850
KOMO 4	tips@komo4news.com	888-477-5666
KIRO 7	newstips@kirotv.com	260-728-8308
Radio		
KIRO 97.3 FM	newsdesk@973kiro.com	206-726-7000
KOMO 97.7 FM	tips@komonews.com	206-404-4000
KUOW 94.9 FM		206-543-2710
KPLU 88.5 FM		206-677-5758
Print		
Seattle Times Twitter	newstips@seattletimes.com twitter.com/seattletimes	206-464-2204

APPENDIX O

CORRESPONDENCE

ATTACHMENT A

SALLAL WATER ASSOCIATION
WATER SYSTEM PLAN INFORMATIONAL MEETING
Minutes of Meeting
Tuesday, May 5, 2020

President Daylin Baker called to order an informational meeting of Sallal Water Association members and consumers on Tuesday, May 5, 2020 at 7:00 pm. The meeting was conducted electronically using Zoom videoconferencing services.

This meeting was called pursuant to WAC 246-290-100 (8)(a) to review the Association's draft updated Water System Plan. Notice of the meeting was set forth in the Association's website and published in the monthly water bill.

In addition to Ms. Baker, Trustees Eric O'Brien, Ann Reed, Larry Costello, Joyce Hibma, Rich Formisano and Shawn McKone were present as were Lisa Hagen, utility customer administrator, Ted Stonebridge, general manager, Warren Perkins, engineer and Richard Jonson, counsel. Six members signed into the meeting.

WATER SYSTEM PLAN PRESENTATION. Mr. Perkins stated that the draft plan has been distributed for comment to King County, the City of North Bend, the Washington State Departments of Health and Ecology and others. The draft plan (with sensitive security information redacted) has been posted to the Association's website.

Mr. Perkins presented slides of the major elements of the Water System Plan and provided explanations. He explained that the Association will receive public comment on the plan through May 25, 2020. Final action on the plan by the Association's Board will follow. There were no questions from the members.

At 7:47 pm, Ms. Baker adjourned the meeting.

Respectfully submitted,
Richard Jonson, counsel

ATTACHMENT A

REVIEW OF SALLAL WATER ASSOCIATION'S WATER SYSTEM PLAN – QUESTIONS AND COMMENTS FOR THE MAY 5^{TH,} 2020 MEMBER MEETING

Chap	**Page**	**Question**	**Comment**
Exec Sum.	E1	(This question also relates to content in Chapters 1 and 2) Will Sallal update all population numbers to include 2019? This would be helpful for all tables in the WSP which currently end with 2018 numbers. Do we have an accurate accounting of the current population? Why are we using old demand projection data for 2019 when actual 2019 (number of new units built and/or occupied*) is available? Also, why aren't we including more recent population and projection data from the Washington State Office of Financial Management (OFM*)? How do the growth rate assumptions (for example, North Bend's 2017 Wastewater Facilities Plan) square with current actual growth rates experienced over the last few years? * (Per Chapter 2 page 11) A lot of development has and is occurring. How and when are new developments like Tanner Rd (156 Units), Tanner Falls (49), Tanner Ridge and other developments in our service area figured into our total population/demand statistics. (See these and other developments on North Bends development map at: https://www.arcgis.com/home/webmap/viewer.html?webmap=c2f2120e32e840fabbb2be971ab40c1d&extent=-121.9346,47.426,-121.5755,47.5457)	In this time of unprecedented recent growth, getting Sallal's Water Service Population numbers current and correct is essential for sound planning. Allot of growth has occurred recently and does not appear to be accounted for in the current DRAFT WSP. *It would be helpful to assess actual Sallal residential growth (units connected) between 2015 and 2020. Hard data are always preferable to projections. Simply reporting the January total numbers of single and multi-family connections for those years would help in making a determination if growth over those years has been accurately reflected in the WSP. Also, can first quarter of 2020 also be provided? Non-residential data could also be considered if there was a significant amount of growth during those years. *OFM is the most widely accepted and respected data in the state. *Actual numbers of residential units can be ascertained to assess accuracy of past growth rate assumptions and current and projected numbers
	E2	Should these fire deficiencies (budgeted at over $2.5M) be completed before money is allocated for corporate headquarters (budgeted at $4,740,000)? What risks do these deficiencies mean to Sallal members?	
Chap 1	1-3	Regarding the quote: *"Purveyor has sufficient capacity to serve water in safe and reliable manner according to DOH"* How does Sallal/DOH make this final determination?	
	1-3	Does text herein mean that our by-laws are written to protect existing members and not potential members?	
	1-7	When are supplemental water rights allowed to extend instantaneous water and when are they not? And how will that impact the Snoqualmie River during low instream flows?	

	1-7	The 2019 changes to our Rules 40 and 41 are complicated. Would you please explain the bottom-line impact of these changes? Do the changes allow the Board to approve water certificates they would not have had the discretion to approve prior to the 2019 changes?	
	1-14	What is the risk associated with our still having asbestos in our drinking water pipes? The capital costs of addressing these problems is budgeted at around $2.47M in Chapter 9. Asbestos testing is to be completed every 9 years. A test should have been completed in 2019. What were the results and what do they mean?	Depending on Sallal's response to this question and department of Health's position on the risks associated with Asbestos in drinking water pipes, It may be prudent for the Board to move forward on both remedying these problems (2.47M) in addition to fire deficiency (over $2.5M) problems before allocating funds for a corporate headquarters.
	1-19	Regarding commercial zoning – has a separate account and water supply been set up for delivery to businesses? If so, how much water is presently available for businesses, separate and apart from residential?	
		What is a latecomer agreement, and what is the intent of these agreements?	
	1-21	Under what circumstances are fire flow analysis required? What is the flow rate of each of our fire hydrants?	
Chap 2	2-1	Sallal has done a good job of staying within our water right permit parameters and providing member-owners with water. Does Sallal currently have sufficient water to provide water for existing Sallal Member-Owners? If this has changed, why has it changed?	
	2-12	If Sallal has sufficient water for current member-owners, then why would Sallal Member-Owners want to reach an agreement with North Bend for the exchange of wholesale water? .	Sallal should not be dependent on growth to cover maintenance of our system. Doing so supports a Ponzi scheme that will eventually fail. Also, the "agreement" would further endanger the Snoqualmie River by using water destined to the river to mitigate the river. This makes no sense.
Chap 3	3-3	It is stated that Well #2 is offline until proven bacteriological removal. Has there been additional testing? Has it shown continued contamination?	A report on how Well #2 has been evaluated and if there have been additional positive bacterial tests is a critical water quality concern. Or if not, how do we know the well has a bacteria problem based on only one positive test back last fall.
	3-4	Nitrate test result quoted is from 2017, but nitrate is required to be tested annually. What were 2018 and 2019 results?	Appendix shows some 2018 results (not discussed in Chapter 3). Why no 2019 results?
	3-5	Why have water results for chlorination by-products not been reported as of yet? Also please provide the required 2019 asbestos test data.	Seems that testing for chlorination by-products should be performed ASAP after initiating chlorination of the system.

	3-5	It is stated that Sallal is taking residual chlorine samples throughout the system, but no results or discussion is provided.	How is the chlorination going? Have there been member complaints? I know at the beginning there were issues, how has it been in past few months? What range of residuals are in the system? Any plans to adjust the system?
Chap 4		Do we currently have sufficient water pressure and storage capability to fight fires in all parts of our system?	
Chap 5	5-7	2015 was a hot and dry year. With Climate Change here, we will be seeing more weather years like 2015. Why wasn't 2015 included in table 5-3 and shouldn't Sallal be planning for more years like 2015 as we move into the future?	
	5-11/12	Per Figure 5-4 – New connections may bring in short term revenue, but they also represent long term financial commitments. Have these commitments been baked into budget assumptions? Also is Sallal dependent on new water connections to cover operating revenue? Have/where have our maintenance fees been accruing? Are they adequate?.	
Misc.		Does Sallal plan to implement summer residential water restrictions? If North Bend does so, will that impact Sallal users?	

ATTACHMENT A

REVIEW OF SALLAL WATER ASSOCIATION'S WATER SYSTEM PLAN – QUESTIONS AND COMMENTS FOR THE MAY 5TH, 2020 MEMBER MEETING

Chap	Page	Question	Comment
Exec Sum.	E1	(This question also relates to content in Chapters 1 and 2) Will Sallal update all population numbers to include 2019? This would be helpful for all tables in the WSP which currently end with 2018 numbers. Do we have an accurate accounting of the current population? Why are we using old demand projection data for 2019 when actual 2019 (number of new units built and/or occupied*) is available? Also, why aren't we including more recent population and projection data from the Washington State Office of Financial Management (OFM*)? How do the growth rate assumptions (for example, North Bend's 2017 Wastewater Facilities Plan) square with current actual growth rates experienced over the last few years? * (Per Chapter 2 page 11) A lot of development has and is occurring. How and when are new developments like Tanner Rd (156 Units), Tanner Falls (49), Tanner Ridge and other developments in our service area figured into our total population/demand statistics. (See these and other developments on North Bends development map at: https://www.arcgis.com/home/webmap/viewer.html?webmap=c2f2120e32e840fabbb2be971ab40c1d&extent=-121.9346,47.426,-121.5755,47.5457)	In this time of unprecedented recent growth, getting Sallal's Water Service Population numbers current and correct is essential for sound planning. Allot of growth has occurred recently and does not appear to be accounted for in the current DRAFT WSP. *It would be helpful to assess actual Sallal residential growth (units connected) between 2015 and 2020. Hard data are always preferable to projections. Simply reporting the January total numbers of single and multi-family connections for those years would help in making a determination if growth over those years has been accurately reflected in the WSP. Also, can first quarter of 2020 also be provided? Non-residential data could also be considered if there was a significant amount of growth during those years. *OFM is the most widely accepted and respected data in the state. *Actual numbers of residential units can be ascertained to assess accuracy of past growth rate assumptions and current and projected numbers
	E2	Should these fire deficiencies (budgeted at over $2.5M) be completed before money is allocated for corporate headquarters (budgeted at $4,740,000)? What risks do these deficiencies mean to Sallal members?	
Chap 1	1-3	Regarding the quote: *"Purveyor has sufficient capacity to serve water in safe and reliable manner according to DOH"* How does Sallal/DOH make this final determination?	
	1-3	Does text herein mean that our by-laws are written to protect existing members and not potential members?	
	1-7	When are supplemental water rights allowed to extend instantaneous water and when are they not? And how will that impact the Snoqualmie River during low instream flows?	

	1-7	The 2019 changes to our Rules 40 and 41 are complicated. Would you please explain the bottom-line impact of these changes? Do the changes allow the Board to approve water certificates they would not have had the discretion to approve prior to the 2019 changes?	
	1-14	What is the risk associated with our still having asbestos in our drinking water pipes? The capital costs of addressing these problems is budgeted at around $2.47M in Chapter 9. Asbestos testing is to be completed every 9 years. A test should have been completed in 2019. What were the results and what do they mean?	Depending on Sallal's response to this question and department of Health's position on the risks associated with Asbestos in drinking water pipes, It may be prudent for the Board to move forward on both remedying these problems (2.47M) in addition to fire deficiency (over $2.5M) problems before allocating funds for a corporate headquarters.
	1-19	Regarding commercial zoning – has a separate account and water supply been set up for delivery to businesses? If so, how much water is presently available for businesses, separate and apart from residential?	
		What is a latecomer agreement, and what is the intent of these agreements?	
	1-21	Under what circumstances are fire flow analysis required? What is the flow rate of each of our fire hydrants?	
Chap 2	2-1	Sallal has done a good job of staying within our water right permit parameters and providing member-owners with water. Does Sallal currently have sufficient water to provide water for existing Sallal Member-Owners? If this has changed, why has it changed?	
	2-12	If Sallal has sufficient water for current member-owners, then why would Sallal Member-Owners want to reach an agreement with North Bend for the exchange of wholesale water? .	Sallal should not be dependent on growth to cover maintenance of our system. Doing so supports a Ponzi scheme that will eventually fail. Also, the "agreement" would further endanger the Snoqualmie River by using water destined to the river to mitigate the river. This makes no sense.
Chap 3	3-3	It is stated that Well #2 is offline until proven bacteriological removal. Has there been additional testing? Has it shown continued contamination?	A report on how Well #2 has been evaluated and if there have been additional positive bacterial tests is a critical water quality concern. Or if not, how do we know the well has a bacteria problem based on only one positive test back last fall.
	3-4	Nitrate test result quoted is from 2017, but nitrate is required to be tested annually. What were 2018 and 2019 results?	Appendix shows some 2018 results (not discussed in Chapter 3). Why no 2019 results?
	3-5	Why have water results for chlorination by-products not been reported as of yet? Also please provide the required 2019 asbestos test data.	Seems that testing for chlorination by-products should be performed ASAP after initiating chlorination of the system.

	3-5	It is stated that Sallal is taking residual chlorine samples throughout the system, but no results or discussion is provided.	How is the chlorination going? Have there been member complaints? I know at the beginning there were issues, how has it been in past few months? What range of residuals are in the system? Any plans to adjust the system?
Chap 4		Do we currently have sufficient water pressure and storage capability to fight fires in all parts of our system?	
Chap 5	5-7	2015 was a hot and dry year. With Climate Change here, we will be seeing more weather years like 2015. Why wasn’t 2015 included in table 5-3 and shouldn’t Sallal be planning for more years like 2015 as we move into the future?	
	5-11/12	Per Figure 5-4 – New connections may bring in short term revenue, but they also represent long term financial commitments. Have these commitments been baked into budget assumptions? Also is Sallal dependent on new water connections to cover operating revenue? Have/where have our maintenance fees been accruing? Are they adequate?.	
Misc.		Does Sallal plan to implement summer residential water restrictions? If North Bend does so, will that impact Sallal users?	

ATTACHMENT A

1889

State of Washington
DEPARTMENT OF HEALTH
NORTHWEST DRINKING WATER REGIONAL OPERATIONS
20425 72nd Avenue South, Suite 310 • Kent Washington 98032-2388

May 14, 2020

TED STONEBRIDGE
SALLAL WATER ASSOCIATION INC
PO BOX 378
NORTH BEND WA 98045

RE: SALLAL WATER ASSOCIATION INC ID# 75560
KING COUNTY
WATER SYSTEM PLAN
SUBMITTAL #20-0414

Dear Ted Stonebridge:

On April 22, 2020, our office received your documents and assigned them the submittal number 20-0414. Please use this number on all correspondence or additional submittals about this project.

When we have completed the review you will receive either an approval letter or a comment letter listing items that need to be addressed prior to an approval. We expect to review the submittal within 90 days.

There is a fee for our review; we will send you an invoice for payment. The base fee includes our initial review and the review of one resubmittal if needed. If additional reviews are needed, you will receive additional invoices. Payment of the fee does not guarantee or imply approval of your submittal. There is a link to our fee schedule on our website www.doh.wa.gov/ehp/dw under rules, WAC 246-290-990.

Thank you for giving us the opportunity to serve you. We look forward to working with you to ensure your community has safe and reliable drinking water at the tap. Please call me at (253) 395-6750 if you have any questions.

Sincerely,

Mary Rucksdashel

Mary Rucksdashel
Northwest Drinking Water Operations

cc: WARREN PERKINS, P.E.

Notice: *Any purveyor who begins construction on a drinking water project without all required approvals may be subject to penalty of up to $5,000 per service connection (Chapter 70.119A RCW). The Department is under no obligation to accept or approve any component installed or constructed prior to approval. You may be required to expose system components for inspection and rebuild/replace if necessary to meet Department requirements.*

ATTACHMENT A

State of Washington
DEPARTMENT OF HEALTH
NORTHWEST DRINKING WATER REGIONAL OPERATIONS
20425 72nd Avenue South, Suite 310 • Kent Washington 98032-2388

May 14, 2020

RIA BERNS
DEPARTMENT OF ECOLOGY – M/S NB-81
3190 160TH AVE SE
BELLEVUE, WA 98008-5452

Subject: Sallal Water Association Inc, ID #75560
King County
WATER SYSTEM PLAN
Submittal #20-0414

Dear Ria Berns:

Here is the water system plan for the Sallal Water Association Inc located in King County. Please review and provide comments as required in the 2007 Memorandum of Understanding. Please focus comments on the elements identified in the *Joint Review Procedures for Planning and Engineering Documents*. Comments on other elements of the document are welcome, but a response from the water system on other elements is not required.

Please provide written comments to the water utility and copy our office within 60 days from the date of this letter. We will forward any changes to the document regarding water rights to you for review.

Please mail comments to:

Richard Rodriguez
20425 72nd Ave South, Suite 310
Kent WA 98032-2388

If I receive no response by the comment deadline, DOH will determine compliance based on information provided by the water system. If you have any questions, please contact me at (253) 395-6771. Thank you for your time and assistance.

Sincerely,

Richard Rodriguez

Richard Rodriguez
Regional Planner
NW Drinking Water Operations

Enclosures – Water System Plan & Submittal Form

cc: TED STONEBRIDGE
WARREN PERKINS, P.E.

ATTACHMENT A

Water System Plan Submittal Form

This form is required to be submitted along with the Water System Plan (WSP). It will serve to expedite review and approval of your WSP. WSPs will not be reviewed until the submittal form and checklist are completed.

1) SYSTEM NAME SALLAL WATER ASSOCIATION	2) SYSTEM ID #	3) SYSTEM OWNER SALLAL WATER ASSOCIATON
4) CONTACT NAME FOR UTILITY TED STONEBRIDGE	PHONE NUMBER 425-888-3650	TITLE GENERAL MANAGER
ADDRESS P. O. BOX 378 44021 SE TANNER ROAD, SUITE E	CITY NORTH BEND	STATE WA ZIP 98045
5) PROJECT ENGINEER WARREN PERKINS	PHONE NUMBER (206) 284-0860	TITLE ENGINEER
ADDRESS 1130 RAINIER AVE S.	CITY SEATTLE	STATE WASHINGTON ZIP 98145

6. How many services are presently connected to the system? 1664
7. Is the system expanding? (seeking to extend service area or increase number of approved connections) X Yes No
8. If number of services is expected to increase, how many new connections are proposed in the next six years? _366 ERU_
9. If the system is private-for-profit, is it regulated by the State Utilities and Transportation Commission? __ Yes X No
10. Is the system located in a Critical Water Supply Service Area? X Yes No
11. Is the system a customer of a wholesale water purveyor? Yes X No
12. Will the system be pursuing additional water rights from the Sate Department of Ecology in the next 10 years? X Yes No
13. Is the system proposing a new intertie? (Note: Negotiations are underway with North Bend) X Yes No
14. Do you have projects(s) currently under review by Department of Health? Yes X No
15. Are you requesting distribution main project report and construction document submittal exception, and if so, does the WSP contain standard construction specifications for distribution mains? X Yes No
16. Are you requesting distribution related project report and construction document submittal exception, and if so, does the WSP contain distribution facilities design and construction standards, including internal engineering review procedures? X Yes No
17. Have you sent copies of the draft WSP to adjacent purveyors and the County for their review and comment? X Yes No

If yes, list adjacent utilities/entities that have received a copy of the draft WSP

NORTH BEND, KING COUNTY,

18. Is this plan an: X Initial Submittal Revised Submittal

20-0414
RECEIVED
APR 22 2020
DEPARTMENT OF HEALTH
NW DRINKING WATER

Please enclose the following number of copies of the WSP:

- 2 copies for Department of Health Review
- 1 additional copy if you answered "YES" to question 9
- 1 additional copy if you answered "Yes" to question 12 and/or13

______ Total Copies Attached

DOH 331-040 (rev 3/99)

ATTACHMENT A

WSP Checklist

	Content Description	*Must Be Submitted (√)	(Page #) in WSP
Chapter 1	**Description of Water System**		
	• Ownership and Management	( )	1-1
	• System History and Background	( )	1-2
	• Inventory of Existing Facilities	( )	1-7
	• Related Plans (e.g., CWSP, local land use plans)	( )	1-17
	• Service Area and Characteristics	( )	1-6
	• Agreement (signed in accordance with CWSP)	( )	
	• Map	( )	Fig 1-5
	• Service Area Policies (including SMA policy and conditions of service)	( )	1-19
Chapter 2	**Basic Planning Data**		
	• Current Population, Number of Service Connections, and ERUs	( )	2-1
	• Current Water Use and Data Reporting	( )	2-3
	• Current and Future Land Use	( )	Fig 1-7
	• Future Population and Number of Service Connections and ERUs (6 and 20 years)	( )	2-12
	• Future Water Use (Demand forecast for 6 and 20 years)	( )	2-13
Chapters 3&4	**System Analysis**		
	• System Design Standards	( )	4-1
	• Water Quality Analysis	( )	3-1
	• System Inventory, Description and Analysis	( )	
	• Source	( )	4-4
	• Treatment	( )	
	• Storage	( )	4-10
	• Distribution System/Hydraulics	( )	4-16
	• Summary of System Deficiencies	( )	4-20
	• Analysis of Possible Improvement Projects	( )	4+21
Chapter 5	**Conservation Program and Source of Supply Analysis**		
	• Conservation Program	( )	5-2
	• Water Right Assessment	( )	4-4
	• Source of Supply Analysis and evaluation of supply alternatives	( )	4-7
	• Water Supply Reliability Analysis With Water Shortage Response Plan	( )	5-9
	• Interties	( )	-
Chapter 6	**Source Water Protection (Check One or Both)**		
	• Wellhead Protection Program	( )	6-1
	• Watershed Control Program	( )	
Chapter 7	**Distribution Facilities Design and Construction Standards**		
	• Standard Construction Specification for Distribution Mains	( )	7-2
	• Design and Construction Standards for distribution Related Projects	( )	App D
Chapter 7	**Operation and Maintenance Program**		
	• Water System Management and Personnel	( )	8-1
	• Operator Certification	( )	8-1
	• Routine Operating Procedures, Preventive Maintenance and Record Keeping	( )	8-3
	• Water Quality Sampling Procedures (Comprehensive Monitoring Plan)	( )	-
	• Coliform Monitoring Plan	( )	App G
	• Emergency Response Program	( )	8-8
	• Safety Procedures	( )	8-7
	• Cross-Connection Control Program	( )	8-13
	• Service Reliability in accordance with WAC 246-290-420	( )	
Chapter 9	**Improvement Program**		
	• Capital Improvement Schedule (6 and 20 years)	( )	9-7
Chapter 10	**Financial Program**		
	• Summary of past income and expenses	( )	10-3
	• Balanced Operating Budget (1 year if >1,000 connections / 6 year if < 1,000 connections)	( )	10-6
	• Demonstration of revenue and cash flow stability to fund CIP and emergency Improvements	( )	10-11
	• Rate Structure that considers affordability of rates and water conservation	( )	10-1
	• Systems < 1,000 connections may do DOH Financial Viability Test to complete above reqs.	( )	
	• UTC Financial Viability and Feasibility Test (for UTC regulated systems)	( )	
Appendices	**Miscellaneous Documents**		
	• For Community Systems, Meeting of the Consumers (date and description)	( )	App O
	• County/Adjacent Utility Correspondence	( )	App L
	• Documentation of State Environmental Policy Act (SEPA) Compliance	( )	App L
	• Agreements	( )	
	• Satellite Management Program	( )	

* Requirement will be determined at the pre-plan conference.

ATTACHMENT A

Buckner Questions submitted 5/25/2020
Answers provided by Sallal 6/3/2020

1. Since there has been so much development in the last few years and we have questions about the short to medium term projections, would Sallal address those concerns by simply providing the following information for March (as this will include some of the new development from this year.)

A. Providing this information would require paying Sallal's contracted engineer. We cannot use membership funds to pay for an individual members research request.

2. When will the large new developments currently under construction (Tanner Ridge, Tanner Road and Tanner Falls- which represent 228 residential connections) be added to the count?

A. When the certificates are issued.

3. With so much recent growth and construction under development, updating population numbers would provide more confidence that demand assumptions are accurate. To provide reassurance, would Sallal be willing to provide these numbers even if they do not plan to use them in the WSP?

A: Providing this information would require paying Sallal's contracted engineer. We cannot use membership funds to pay for an individual members research request.

4. Will you provide the list you used to come up with the ERUs which includes when and how these developments (Tanner Ridge, Tanner Road and Tanner Falls) will be counted?

A: Providing this information would require paying Sallal's contracted engineer. We cannot use membership funds to pay for an individual members research request.

5. Given the Pandemic and potential for budget shortfalls as well as the possible trend of office workers working from home, wouldn't it be prudent to simply build or secure a warehouse and wait to see if new offices are really needed before spending the money we may need for emergencies or other priorities?

A: This question does not pertain to the WSP.

6. So the Board can't use discretion in these decisions?

A: Previously asked and answered.

7. I live in Wood River and we are in the Wildland Urban Interphase and have a high danger of wildfire. Will you please advise as to the water pressure available to fight fires in my neighborhood? Also, how do members go about asking for this information for their neighborhoods?

A: If a member can provide a valid need for requesting this information (as it costs Sallal time and resources to answer), the member can submit the request to the General Manager.

8. Would this service [contract with City] go beyond the additional 150+ or- water certificates we have left? And if so, why?

A: Any contract with the City would provide for the purchase of water from the City to serve the portion of the UGA that is within Sallal's service area.

9. Isn't there a member-owner charge for maintenance? If so, is it insufficient to cover maintenance? Also, if we are dependent on new connections for maintenance then how would we ever stop adding new connections?

A: No. Needed capital improvements are incorporated into the rates, the amortization (debt service), and new connection fees. Without new connection fees, rates will need to increase.

Thomas WSP questions submitted 5-25-2020
Answers from Sallal provided 6-3-2020

1. In terms of the plan to supply water to Sallal [from the City], is the intent to sell the average day demand throughout the year or only at certain times?

A: This is beyond the Scope of the Water System Plan. It is an issue for the potential Contract, still being negotiated.

2. Periods where mitigation is not required [by the City] are obvious candidates but is there intent to supply [buy water from the City] during periods where mitigation is required?

A: Hopefully not, but to be determined. This is beyond the Scope of the Water System Plan. It is an issue for the potential Contract, still being negotiated.

3. Has Sallal received any updates as to the rate and/or quantity of mitigation water expected to be supplied and if so, what?

A: This is beyond the Scope of the Water System Plan. It is an issue for the potential Contract, still being negotiated.

4. What analysis has Sallal performed under the proposed plan to ensure it is still feasible?

A: This is beyond the Scope of the Water System Plan. It is an issue for the potential Contract, still being negotiated.

5. Is there sufficient water both quantity and rate available from Sallal wells to supply maximum day demand in support of summer and fall increased demand for water for the entire Sallal service area?

A: Currently Sallal water production is limited by its annual water right. Maximum day demand is not a limiting factor.

6. What of reliability considerations should NB-3 fail or become unavailable?

A: Sallal has the physical capacity to supply water to new connections, it does not have the water right to serve growth beyond that identified in the WSP.

7. Will Sallal curtail the supply of mitigation water to reflect any unavailability of NB-3 when Sallal has a demand for water from NB-3?

A: This is beyond the Scope of the Water System Plan. It is an issue for the potential Contract, still being negotiated.

8. In terms of Sallal supply of mitigation water for the benefit of the city of North Bend does Sallal know whether the quantity and/or rate will support average day demand for the city's users (and potentially Sallal users that may be supplied NB-3 water)?

A: Quantity or rate of what? This is beyond the Scope of the Water System Plan. It is an issue for the potential Contract, still being negotiated.

9. Note table 2-13 appears to have an error... 647 gpm projected for 2020 whereas prior and next year have higher maximum day production. Is 647 gpm correct for 2020?

A: This is a typo, it should be 946.

10. The table implies that Sallal would be pumping at maximum capacity for 24 hours a day... is that correct?

A: We do not understand your interpretation. Maximum water right at Rattlesnake sources is 1,600 gpm, which is well below the physical capacity of 2,650 gpm (including Well 4). Table 2-13 has a maximum production rate of 1,198 gpm in 2040. Peak hour demand exceeds the instantaneous water right but that deficit is addresses by water storage in the reservoirs.

11. Is the pumping rate at maximum for 24 hours a day recommended practice or is a shorter period advised (chapter 4 states a 20-hour DOH recommendation)?

A: 20 hours per day per well is the recommended maximum. 24 hours/day is the WAC limit.

12. Do these tables (2-6/2-13) include demand related to supplying mitigation water?

A: No.

13. The Centennial ROE states a requirement for up to 1000 gpm to be supplied as mitigation water. How does Sallal view it can comply to this requirement while still meeting all other demands for its customers, storage, and fire flow?

A: In theory the water going to mitigation and thus out of the distribution system will be replaced by water coming into the system from North Bend. This is beyond the Scope of the Water System Plan. It is an issue for the potential Contract, still being negotiated.

14. What is the expected demand (in average and maximum rate in gpm) for mitigation water?

A: The Record of Examination states up to 1,000 gpm from Sallal. Actual rates and amounts will vary during the year and over the years. This is beyond the Scope of the Water System Plan. It is an issue for the potential Contract, still being negotiated.

15. Or will Sallal reserve 1000 gpm for mitigation purposes as implied in the Centennial ROE?

A: No water has been "reserved". This is beyond the Scope of the Water System Plan. It is an issue for the potential Contract, still being negotiated.

16. Is there any water quality data that includes raw samples from Edgewick / Well 3 that may be shared?

A: There is data in the WSP.

17. The gravel pit has been in operation for quite some time. What monitoring or additional monitoring may be recommended to ensure Edgewick meets state and federal drinking standards?

A: The draft Water System Plan presents the same WHPA as the last Water System Plan.

18. Has the owner of the gravel operation been notified of the proposed expansion of the WHPA for Well 3?

A: The draft Water System Plan presents the same WHPA as the last Water Plan. Figure6-3 has been revised.

19. In consideration of all the projects, save for the proposed contract with the city of North Bend, what will the expected rate increases be to support these projects and what membership growth assumptions are made with respect to projections for rate increases?

A: A rate study is in progress that seeks to answers these and other questions. The financial section of the WSP shows the rate increase assumptions in Table 10-8

20. What is the basis for $30k in professional services estimates related to a proposed contract with the city?

A: A Budget place holder if needed.

21. Does Sallal know the volume (or estimates of the volumes) required for storage to support a proposed contract with the city of North Bend?

A: A second new reservoir is called for in the WSP, in addition to the one scheduled for 2020. The size and timing of the new reservoir is to be determined.

22. What would the costs be of such storage?

A: To be determined.

23. It is noted that the city proposed 10MG of storage for mitigation water. Does Sallal view that 10MG may be required for its storage to support the supply of mitigation water to the city?

A: No.

ATTACHMENT A

Questions for Sallal WSP:

1. On page 1-17 the following paragraph is included:

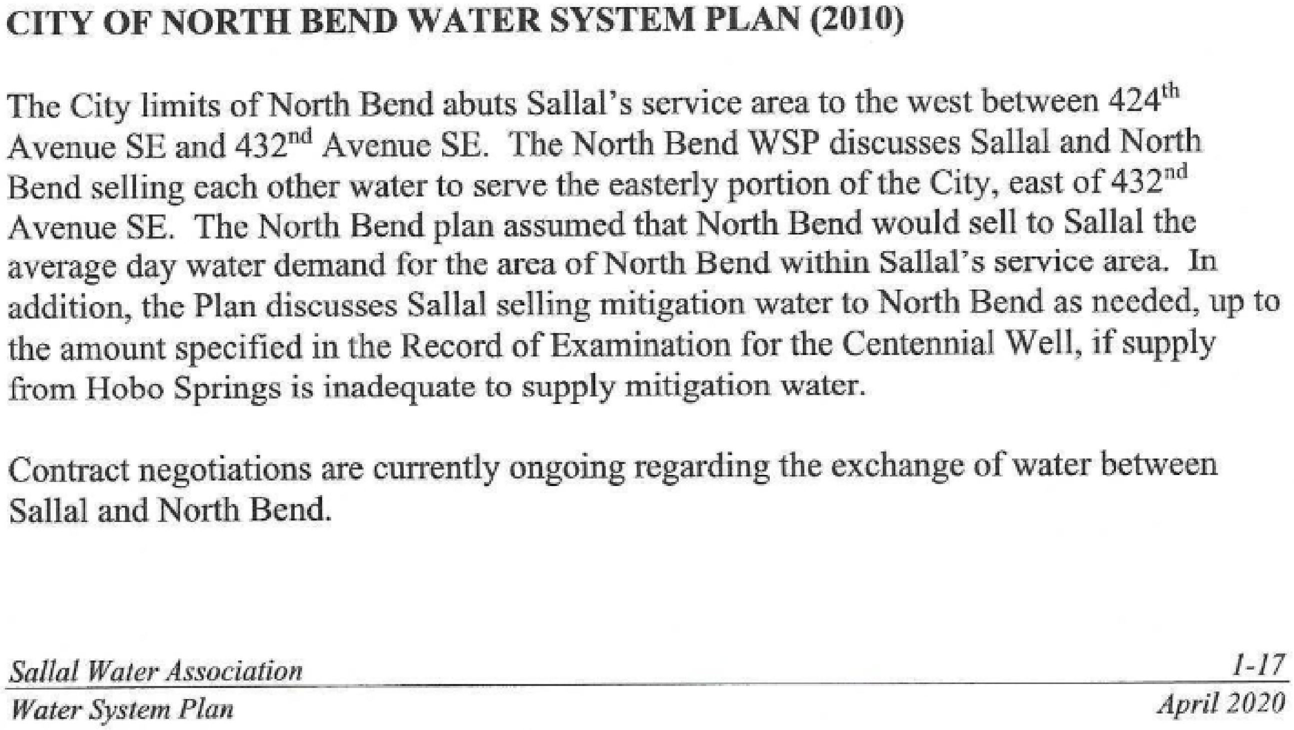

CITY OF NORTH BEND WATER SYSTEM PLAN (2010)

The City limits of North Bend abuts Sallal's service area to the west between 424th Avenue SE and 432nd Avenue SE. The North Bend WSP discusses Sallal and North Bend selling each other water to serve the easterly portion of the City, east of 432nd Avenue SE. The North Bend plan assumed that North Bend would sell to Sallal the average day water demand for the area of North Bend within Sallal's service area. In addition, the Plan discusses Sallal selling mitigation water to North Bend as needed, up to the amount specified in the Record of Examination for the Centennial Well, if supply from Hobo Springs is inadequate to supply mitigation water.

Contract negotiations are currently ongoing regarding the exchange of water between Sallal and North Bend.

Sallal Water Association 1-17
Water System Plan *April 2020*

In terms of the plan to supply water to Sallal is the intent to sell the average day demand throughout the year or only at certain times in the above paragraph? Periods where mitigation is not required are obvious candidates but is there intent to supply during periods where mitigation is required? Has Sallal received any updates as to the rate and/or quantity of mitigation water expected to be supplied and if so, what? The past analysis under the ROE was in the neighborhood of ~240 acre-feet a year and 1000 gpm.

What analysis has Sallal performed under the posed plan to ensure it is still feasible? Is there sufficient water both quantity and rate available from Sallal wells to supply maximum day demand in support of summer and fall increased demand for water for the entire Sallal service area? What of reliability considerations should NB-3 fail or become unavailable? Will Sallal curtail the supply of mitigation water to reflect any unavailability of NB-3 when Sallal has a demand for water from NB-3?

In terms of Sallal supply of mitigation water for the benefit of the city of North Bend does Sallal know whether the quantity and/or rate will support average day demand for the city's users (and potentially Sallal users that **may** be supplied NB-3 water)?

2. The WSP has the following tables related to average day demand, maximum day demand, and related items. Each table and several questions are posed:

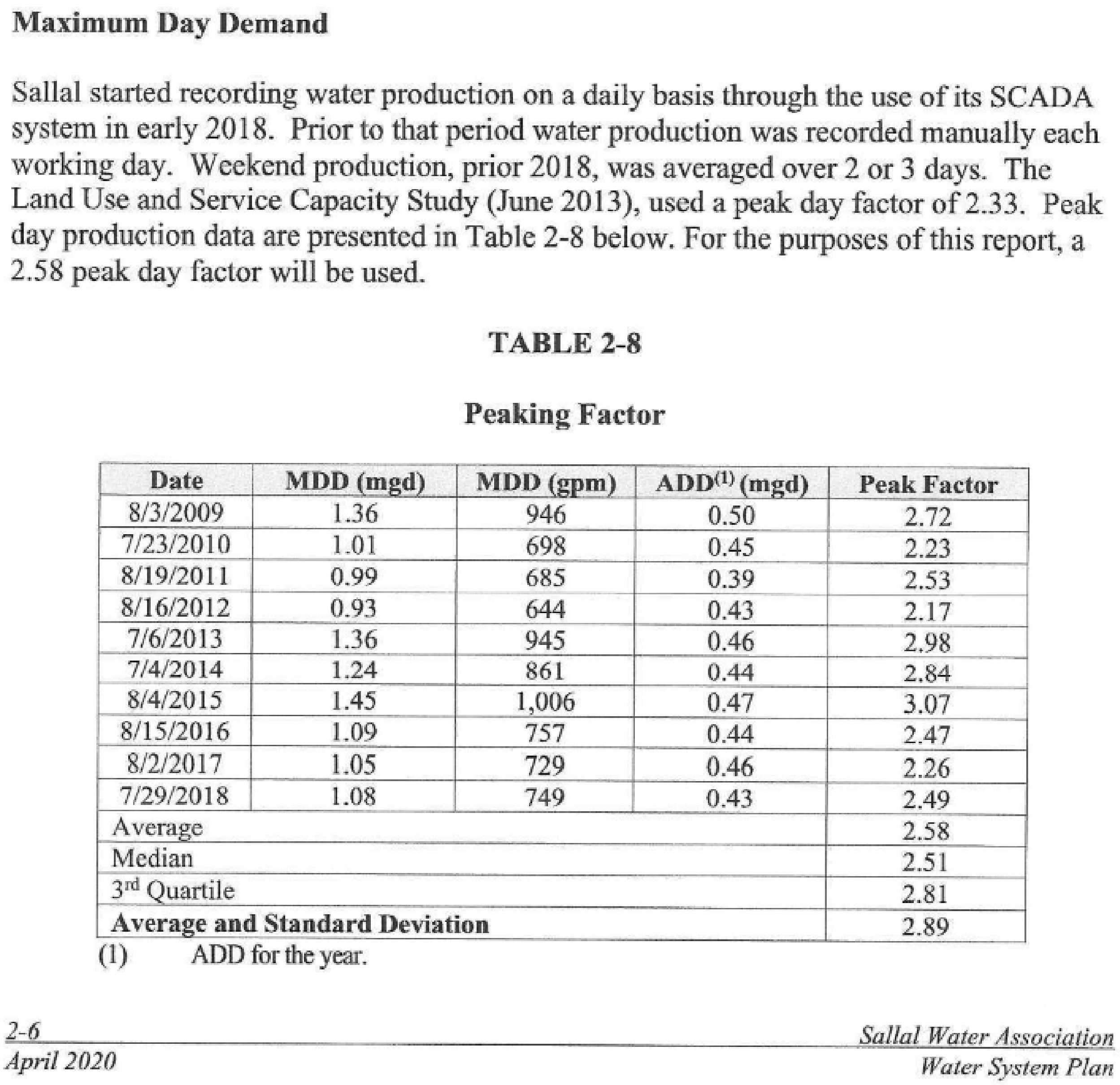

Maximum Day Demand

Sallal started recording water production on a daily basis through the use of its SCADA system in early 2018. Prior to that period water production was recorded manually each working day. Weekend production, prior 2018, was averaged over 2 or 3 days. The Land Use and Service Capacity Study (June 2013), used a peak day factor of 2.33. Peak day production data are presented in Table 2-8 below. For the purposes of this report, a 2.58 peak day factor will be used.

TABLE 2-8

Peaking Factor

Date	MDD (mgd)	MDD (gpm)	ADD(1) (mgd)	Peak Factor
8/3/2009	1.36	946	0.50	2.72
7/23/2010	1.01	698	0.45	2.23
8/19/2011	0.99	685	0.39	2.53
8/16/2012	0.93	644	0.43	2.17
7/6/2013	1.36	945	0.46	2.98
7/4/2014	1.24	861	0.44	2.84
8/4/2015	1.45	1,006	0.47	3.07
8/15/2016	1.09	757	0.44	2.47
8/2/2017	1.05	729	0.46	2.26
7/29/2018	1.08	749	0.43	2.49
Average				2.58
Median				2.51
3rd Quartile				2.81
Average and Standard Deviation				2.89

(1) ADD for the year.

2-6
April 2020

Sallal Water Association
Water System Plan

ATTACHMENT A

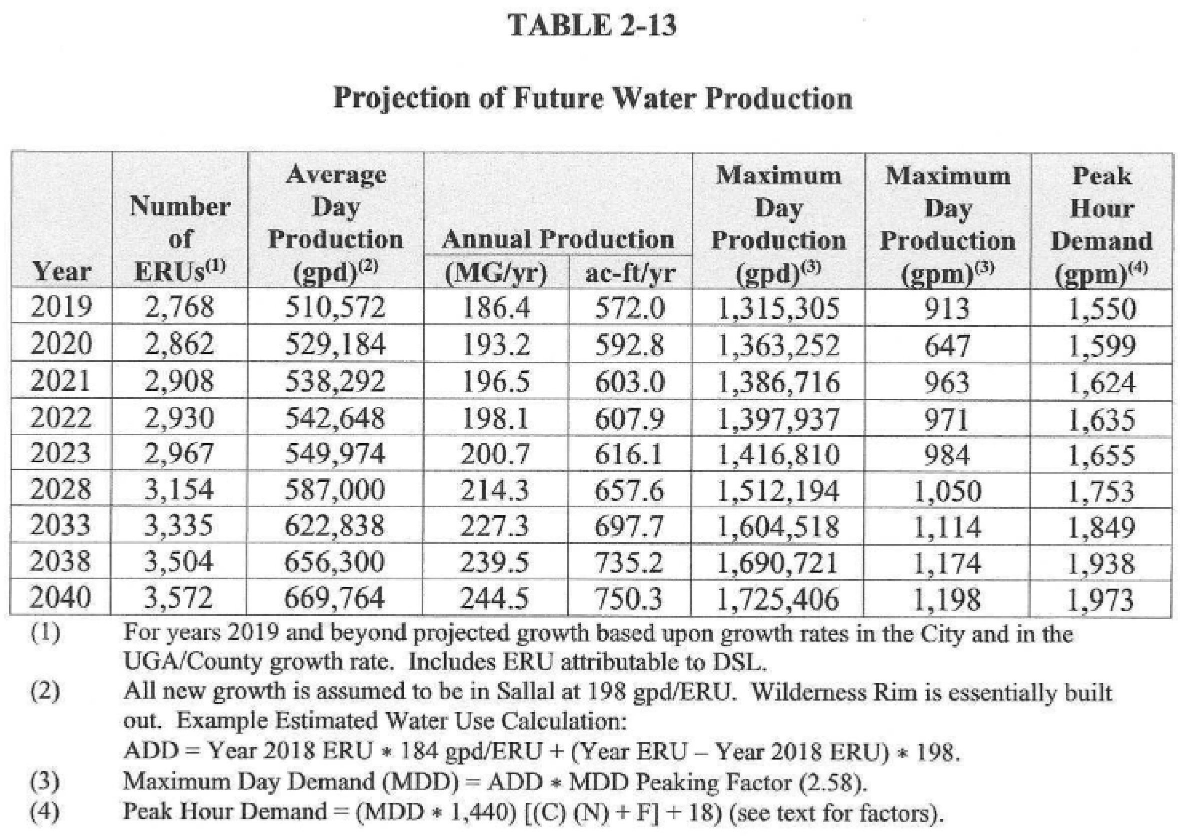

TABLE 2-13

Projection of Future Water Production

Year	Number of ERUs[1]	Average Day Production (gpd)[2]	Annual Production (MG/yr)	Annual Production ac-ft/yr	Maximum Day Production (gpd)[3]	Maximum Day Production (gpm)[3]	Peak Hour Demand (gpm)[4]
2019	2,768	510,572	186.4	572.0	1,315,305	913	1,550
2020	2,862	529,184	193.2	592.8	1,363,252	647	1,599
2021	2,908	538,292	196.5	603.0	1,386,716	963	1,624
2022	2,930	542,648	198.1	607.9	1,397,937	971	1,635
2023	2,967	549,974	200.7	616.1	1,416,810	984	1,655
2028	3,154	587,000	214.3	657.6	1,512,194	1,050	1,753
2033	3,335	622,838	227.3	697.7	1,604,518	1,114	1,849
2038	3,504	656,300	239.5	735.2	1,690,721	1,174	1,938
2040	3,572	669,764	244.5	750.3	1,725,406	1,198	1,973

(1) For years 2019 and beyond projected growth based upon growth rates in the City and in the UGA/County growth rate. Includes ERU attributable to DSL.

(2) All new growth is assumed to be in Sallal at 198 gpd/ERU. Wilderness Rim is essentially built out. Example Estimated Water Use Calculation:
ADD = Year 2018 ERU ∗ 184 gpd/ERU + (Year ERU – Year 2018 ERU) ∗ 198.

(3) Maximum Day Demand (MDD) = ADD ∗ MDD Peaking Factor (2.58).

(4) Peak Hour Demand = (MDD ∗ 1,440) [(C) (N) + F] + 18) (see text for factors).

Note table 2-13 appears to have an error... 647 gpm projected for 2020 whereas prior and next year have higher maximum day production. Is 647 gpm correct for 2020? Also the table implies that Sallal would be pumping at maximum capacity for 24 hours a day... is that correct? Is the pumping rate at maximum for 24 hours a day a recommended practice or is a shorter period advised (chapter 4 states a 20 hour DOH recommendation). Summer and fall demand may be of concern... sustained irrigation demand may last for weeks.

Does these tables (2-6/2-13) include demand related to supplying mitigation water?

TABLE 4-1

General Facility Requirements

Standard	**DOH Water System Design Manual** ***(October 2019)***	**Sallal Standards**
Average Day and Maximum Day Demand	Average Day Demand (ADD) should be determined from metered water use data.	ADD = Metered consumption using 3-year average with adjustments for anomalies and growth. MDD = Based on peaking factor from historical data
Peak Hour Demand	Peak hour demand (PHD) is determined using equation 5-3: PHD = (MDD*N/1440)*(C*N+F)+18 C=1.6 and F=225	Same as DOH *Water System Design Manual*, Chapter 3, Equation 3-1.
Source Capacity	Capacity must be sufficient to meet MDD.	Same as DOH *Water System Design Manual*, (Chap 4.4.2).
Storage Requirements	The sum of: Operational Storage Volume sufficient to prevent pump cycling. Equalizing Storage $V_{ES} = (Q_{PH} - Q_S) * 150$ Standby Storage $V_{SB} = N * SB_i * T_d$ N = Number ERU based upon ERU_{MDD} SB_i = Locally Adopted SB volume T_d = Number of Days selected to meet standard $V_{SB} \geq$ 200 gal/ERU Fire Suppression Storage $V_{FSS} = NFF * T$ ADD = average day demand, gpd/ERU N = number of ERU's Q_{PH} = peak hour demand, gpm Q_S = capacity of all sources, excluding emergency sources, gpm Q_L = capacity of largest source, gpm t_m = daily pump source run time, min (1440) NFF = Req'd fire flow, gpm (set by Fire Marshall) T = fire flow duration, min (set by Fire Marshall)	Same as DOH *Water System Design Manual*, using the formulas provided in the manual, Chapter 7.
Minimum System Pressure	The system shall be designed to maintain a minimum of 30 psi throughout the distribution system under peak hour demand and 20 psi under emergency conditions, including fire flow conditions during MDD.	Same as DOH *Water System Design Manual*, Chapter 8.

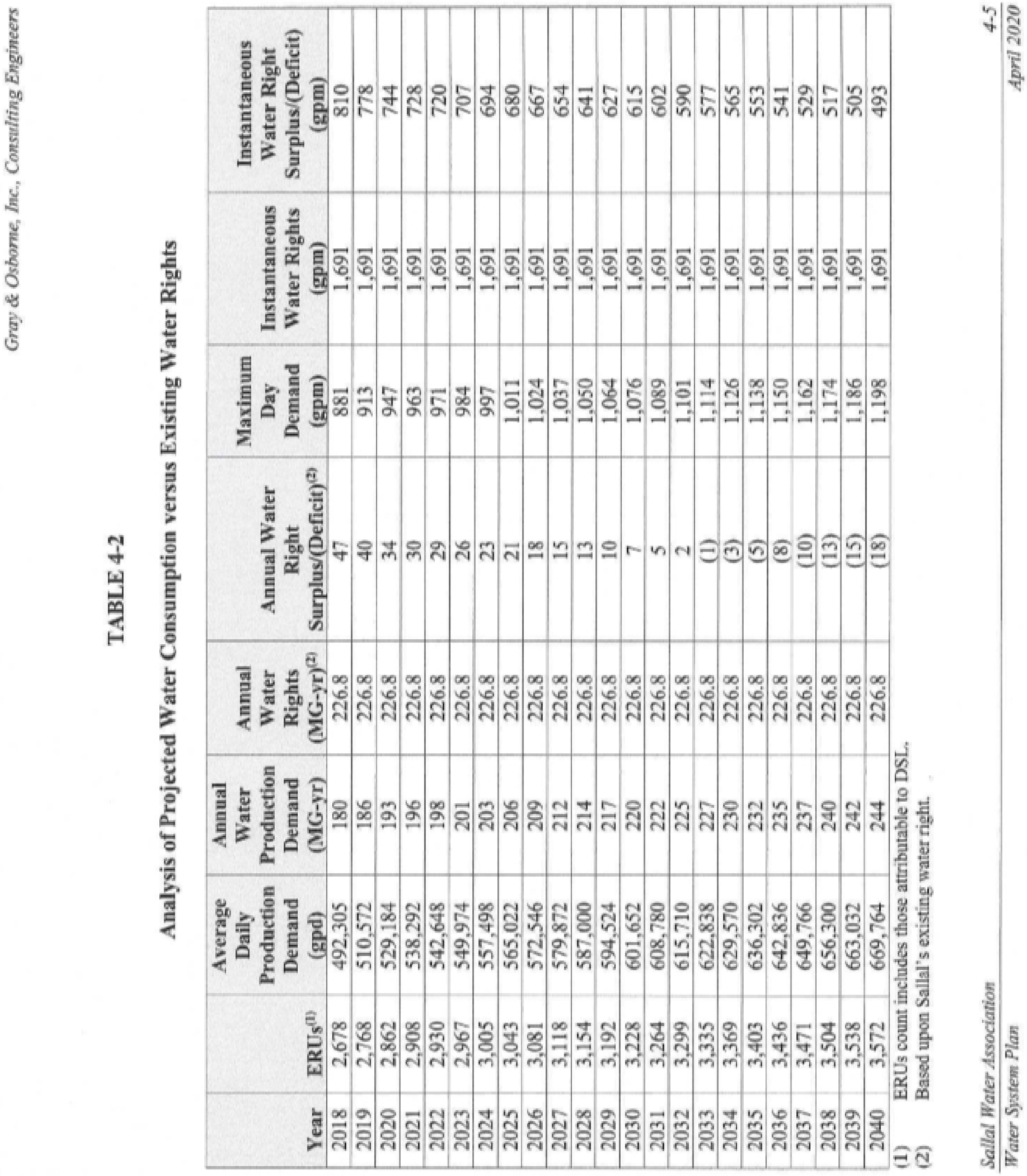

TABLE 4-2

Analysis of Projected Water Consumption versus Existing Water Rights

Year	ERUs[1]	Average Daily Production Demand (gpd)	Annual Water Production Demand (MG-yr)	Annual Water Rights (MG-yr)[2]	Annual Water Right Surplus/(Deficit)[2]	Maximum Day Demand (gpm)	Instantaneous Water Rights (gpm)	Instantaneous Water Right Surplus/(Deficit) (gpm)
2018	2,678	492,305	180	226.8	47	881	1,691	810
2019	2,768	510,572	186	226.8	40	913	1,691	778
2020	2,862	529,184	193	226.8	34	947	1,691	744
2021	2,908	538,292	196	226.8	30	963	1,691	728
2022	2,930	542,648	198	226.8	29	971	1,691	720
2023	2,967	549,974	201	226.8	26	984	1,691	707
2024	3,005	557,498	203	226.8	23	997	1,691	694
2025	3,043	565,022	206	226.8	21	1,011	1,691	680
2026	3,081	572,546	209	226.8	18	1,024	1,691	667
2027	3,118	579,872	212	226.8	15	1,037	1,691	654
2028	3,154	587,000	214	226.8	13	1,050	1,691	641
2029	3,192	594,524	217	226.8	10	1,064	1,691	627
2030	3,228	601,652	220	226.8	7	1,076	1,691	615
2031	3,264	608,780	222	226.8	5	1,089	1,691	602
2032	3,299	615,710	225	226.8	2	1,101	1,691	590
2033	3,335	622,838	227	226.8	(1)	1,114	1,691	577
2034	3,369	629,570	230	226.8	(3)	1,126	1,691	565
2035	3,403	636,302	232	226.8	(5)	1,138	1,691	553
2036	3,436	642,836	235	226.8	(8)	1,150	1,691	541
2037	3,471	649,766	237	226.8	(10)	1,162	1,691	529
2038	3,504	656,300	240	226.8	(13)	1,174	1,691	517
2039	3,538	663,032	242	226.8	(15)	1,186	1,691	505
2040	3,572	669,764	244	226.8	(18)	1,198	1,691	493

(1) ERUs count includes those attributable to DSL.
(2) Based upon Sallal's existing water right.

The Centennial ROE states a requirement for up to 1000 gpm to be supplied as mitigation water. How does Sallal view it can comply to this requirement while still meeting all other demands for its customers, storage, and fire flow? It appears that 1000 gpm plus the current demand is in excess of the source capacity of Sallal's wells (1600 for the wells 1 and 2 near Rattlesnake Lake and the well at Edgewick 91). The maximum day demand observed in 2015 was 1006 gpm, reserving 1000 gpm for mitigation demand leaves an obvious and worsening deficit with time and growth (2006 gpm > 1691 gpm). The period for which mitigation water could be extended over many days and weeks in consideration of summer and fall demand and availability of mitigation water from Hobo Springs.

What is the expected demand (in average and maximum rate in gpm) for mitigation water? Or will Sallal reserve 1000 gpm for mitigation purposes as implied in the Centennial ROE?

3. Question on WHPAs. Chapter 6 includes a map and the following statement:

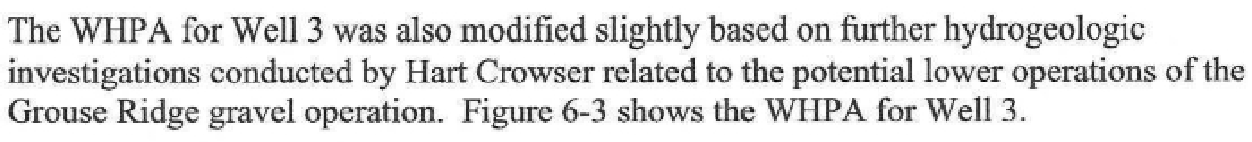

The WHPA for Well 3 was also modified slightly based on further hydrogeologic investigations conducted by Hart Crowser related to the potential lower operations of the Grouse Ridge gravel operation. Figure 6-3 shows the WHPA for Well 3.

Is there any water quality data that includes raw samples from Edgewick / Well 3 that may be shared? The gravel pit has been in operation for quite some time. What monitoring or additional monitoring may be recommended to ensure Edgewick meets state and federal drinking standards? Has the owner of the gravel operation been notified of the proposed expansion of the WHPA for Well 3?

4. Questions on Chapter 9.

In consideration of all the projects save for the posed contract with the city of North Bend what will the expected rate increases be to support these projects and what membership growth assumptions are made with respect to projections for rate increases?

What is the basis for $30k in professional services estimates related to a posed contract with the city? Note the past contract proposals contemplated the formation of a committee between the city and Sallal; the city has spent $100ks of professional services in relation to revisiting aspects of the mitigation design; and has other contracts for mitigation professional services.

Does Sallal know the volume (or estimates of the volumes) required for storage to support a posed contract with the city of North Bend? What would the costs be of such storage? It is noted that the city proposed 10MG of storage for mitigation water. Does Sallal view that 10MG may be required for its storage to support the supply of mitigation water to the city?

ATTACHMENT A

STATE OF WASHINGTON
DEPARTMENT OF ECOLOGY
Northwest Regional Office • 3190 160th Avenue SE • Bellevue, Washington 98008-5452 • (425) 649-7000
711 for Washington Relay Service • Persons with a speech disability can call (877) 833-6341

SENT VIA EMAIL

June 12, 2020

Ted Stonebridge, General Manager
Sallal Water Association
PO Box 378
North Bend, WA 98045
ted@sallal.com

Water System Plan Comment Letter
ADVISORY COMMENT(S) Below

RE: Sallal Water Association – Water System Plan, Washington State Department of Health System ID #75560Q Reviewed by Washington State Department of Ecology

Dear Ted Stonebridge:

Thank you for the opportunity to review the Sallal Water Association's (Sallal) Water System Plan (WSP) dated April 2020 and received on April 23, 2020. Consistent with the Memorandum of Understanding between the Department of Health (DOH) and Department of Ecology (Ecology) regarding joint review and approval of WSPs, this letter is being sent to your office with Ecology's comments. Specific elements of the WSP review included the Water Rights Self-Assessment of Sallal's Water System as well as additional water rights documentation, including the water right files themselves and Sallal's previous WSPs and project reports.

Ecology identified one issue when reviewing the WSP and supplemental documentation. Please see our ADVISORY COMMENT below.

ADVISORY COMMENT

Incorrect Information on Water Right Self-Assessment

In the water rights documentation presented on the Water Rights Self-Assessment (Appendix B), Ecology identified the following issues:

1. The stated non-additive annual quantity (Qa) for G1-24975C of "0" is incorrect. The certificate for G1-24975 specifies a "supplemental" Qa of 102 acre-feet per year (ac-ft/yr). The certificate G1-24975C further indicates that the 102 Qa listed on the water right is "supplemental to G1-24671C", and later specifies that water use under both certificates may not exceed 696 ac-ft/yr.

The designation of "supplemental" is an older designation for "non-additive." Additive (formerly known as "primary") quantities listed on water rights increase the capacity of the water system, whereas non-additive ("supplemental") quantities listed on water rights add operational flexibility between well fields or wells.

2. The self-assessment does not identify G1-28106 as a new application, though this application is discussed elsewhere in this WSP.

GENERAL INFORMATION

Water Right Summary

Sallal's water right portfolio consists of WATER RIGHTS G1-24671C and G1-24975C. In addition to the ADVISORY COMMENT provided above, please see Table 1 below for a comprehensive list of Sallal's water rights and their respective relationships. Please note that the water rights summarized here DO NOT AGREE with Sallal's Water Right Self-Assessment (Appendix B) of the WSP. This discrepancy should be resolved prior to finalization of the WSP.

Table 1. Existing Water Rights

Water Right	Source Name	Additive Qi	Non-Additive Qi	Additive Qa	Non-Additive Qa
G1-24671C	Wells 1 & 2	1,600 GPM	0	696 ac-ft/yr	0
G1-24975C	Well 3	91 GPM	0	0	102 ac-ft/yr
	TOTALS:	1,691 GPM		696 ac-ft/yr	

Future Demand

The WSP provides production records from 2010-2018, metered consumption records from 2008 – 2018, connection records from 2010 – 2018, and calculations based on this information in Tables 2-1 through 2-10.

As of 2018, the WSP calculated that Sallal served 2,287 residential connections: 1,664 direct residential connections and 625 residential connections via wholesale service to Wilderness Rim. In 2018, total production (from Table 2-3 of the WSP) was 551 acre-feet, though it appears that the column showing annual water production in Table 2-3 is mislabeled. The calculations provided in Table 2-9 indicate that each residential connection in Sallal's water system, between 2012 and 2018, consumed, on average, 184 gallons per day. This is the current calculated value for an Equivalent Residential Unit (ERU), within Sallal's system. The calculations, based on an ERU value of 184 gallons per day, provided in Table 2-10, indicate that system-wide, Sallal served 2,678 ERUs in 2018.

This current ERU value of 184 gallons per day is based on all residential connections, including consumption from homes in Wilderness Rim. Within the same period, the average per-connection consumption rate of residences outside of Wilderness Rim was 198 gallons per day. With no additional growth expected to occur within Wilderness Rim, this WSP uses this higher ERU value of 198 gallons per day for future growth projections.

Projected future demand for Sallal, provided in Table 2-12 of the WSP, was estimated at 3,335 ERUs by 2033 and 3,572 ERUs by 2040. Future demand projections were also provided in the Water Rights Self-Assessment (Appendix B of the WSP). Future demand is translated into annual and instantaneous production needs in Table 2-13 of the WSP. Based on this table, Sallal's demand for water will exceed what is authorized in its two current water rights by 2033, in 13 years.

Based on the information provided in the Water Rights Self-Assessment (Appendix B) and in Chapter 2 of the WSP, annual capacity DOES NOT appear to be an issue for the effective ten year approval period of this WSP. **Nevertheless, the process of developing or acquiring new water sources is often a multi-year process involving multiple agencies and stakeholders. Ecology encourages Sallal to begin or continue planning for future water needs now, and is available for technical assistance.**

Service Area
RCW 90.03.386(2) requires that water systems be in compliance with the terms of their WSP and that any alteration of the place of use not be inconsistent with any comprehensive plans or development regulations. An evaluation of any such change should be undertaken if a future expansion of Sallal's water system service area is planned.

Sincerely,

Kellie A Gillingham

Kellie Gillingham
Water Master
Water Resources Program

ecc: Richard Rodriguez, Washington Department of Health
Warren W. Perkins, PE, Gray and Osborne, Inc.
Ria Berns, Department of Ecology

ATTACHMENT A

King County
Utilities Technical Review Committee
Department of Local Services
35030 SE Douglas St #210
Snoqualmie, WA 98065
www.kingcounty.gov

Sallal Water System Plan Review – Initial Comments

June 30, 2020
Ted Stonebridge
General Manager, Sallal Water Association

On April 22, 2020, the Sallal Water Association submitted their draft Water System Plan for review by the King County Utilities Technical Review Committee (UTRC). On June 17, 2020, the UTRC held an open public meeting and deliberated the plan content. Due to the volume of comments and materials received by both the public and the applicants—including during the meeting—the UTRC decided:

- to issue a preliminary comment letter based on the initial submittal materials,
- to close the public comment period on June 24,
- to subsequently review the new materials, and
- to deliberate at a later meeting, and issue a second comment letter, if necessary, on all new submitted items.

This letter is that first comment letter, and a second letter may be forthcoming in July. To obtain the UTRC's "recommendation of adequacy" to the King County Council—the final approving authority of Comprehensive Water and Sewer System Plans, per King County Code 13.24—the Committee respectfully requests that you satisfactorily address the following items:

CONTENT EDITS

1. Figure 1-7 includes King County Zoning Districts within the City of North Bend Zoning portion of the legend.
2. On Page 1-3, the Plan states Sallal has reduced its future service area. Please highlight or annotate this removed area in a map, or reference an existing map if displayed there.
3. While the process for obtaining a Certificate of Water Availability is detailed on Page 1-21, there is no information about the process if Sallal does not provide water to that parcel, such as a requirement for future connection covenants. Please provide additional details on your process for these matters.
4. Sallal has had positive coliform detection in multiple years, including a 10-day boil order in September 2019. The Plan states that alternatives are being evaluated. Please identify a preferred alternative and action timeframe.
5. The Plan makes numerous references to—and is dependent on—a pending contract with the City of North Bend to provide mitigation water and receive wholesale potable supply. The Plan does

not adequately identify concrete steps to provide adequate potable water if said agreement is not reached.

6. On page 5-11, the Plan states that Sallal doesn't maintain parks or landscaping where reclaimed water could be used, however, two of their ten largest meters are Twin Falls Middle School Irrigation Meters. The Plan also notes that Sallal has no irrigation management program. Please address actions that Sallal will undertake to address the use of irrigation water.
7. On Page 9-2, the Plan states that a new 240,000 gallon reservoir will be completed in Spring 2020. Please update the status of that project.
8. Note 2 on Table 10-12 assumes an inflationary rate of 4% per year for deferred capital projects. Please note where you obtained that 4% factor, and note contingencies to fund the capital improvements if the actual observed inflationary factor exceeds 4%.
9. The Plan does not address salmon recovery impacts. Please address how pumping regimes, mitigation flows, and other operations beneficially or negatively impact salmon recovery.
10. The Plan does not address climate change and how water supplies may be impacted as summer and fall streamflows diminish due to lack of snowpack.
11. Sallal's franchise agreement with King County expires on September 25, 2020, though one has been applied for. Please identify general expected terms of a franchise, and changes from the previous agreement.
12. Appendix N—Emergency Response Plan—is missing.

The UTRC thanks you for the opportunity to review and comment, and will complete the requisite State Environmental Policy Act noticing and determinations at such time as we have a final plan to submit to Council.

Regards,

Jae Hill

Jae Hill, AICP, CFM
Principal Planner | Chair of the Utilities Technical Review Committee
King County Dept. of Local Services
jhill@kingcounty.gov
o: 206-263-5690

ATTACHMENT A

State of Washington
DEPARTMENT OF HEALTH
NORTHWEST DRINKING WATER REGIONAL OPERATIONS
20425 72nd Avenue South, Suite 310 • Kent Washington 98032-2388

June 30, 2020

TED STONEBRIDGE
GENERAL MANAGER
SALLAL WATER ASSSOCIATION
PO BOX 378
NORTH BEND WA 98045

RE: Sallal Water Association (ID# 75560Q)
King County
2020 Water System Plan
Submittal # 20-0414

Dear Mr. Stonebridge:

Thank you for submitting the Water System Plan (WSP) for the Sallal Water Association (the Association) received in this office on April 22, 2020. We have reviewed the plan and offer the following comments. These comments must be adequately addressed prior to approval of the WSP.

Description of Water System

1. Please provide a determination of local government consistency from the City of North Bend Planning Department.
2. King County Utilities Technical Review Committee will review your WSP. Please respond to their issues. Adequate responses to their issues will be necessary in order to receive a WSP Adoption Ordinance from King County.
3. Page 1-6 and Figures 1-4, 1-5, 1-7, 9-1, and others show the system service area boundary and discuss group A systems in the vicinity.
    a. Please note that our records also show a Camp Waskowitz Water System (ID 23540) and a WSP Fire Training Academy (ID 34874) in the Association's service area boundary. The Shelter Holdings property is not a Group A public water system at this time.
    b. Figure 1-4 appears to remove Nor West and Trucktown from the service area, while other figures do not. The Association is not required or advised to remove these Group A public water systems from their service area. The service area boundaries for all the figures in the plan should be consistent for clarity.

Basic Planning Data

4. Does the Association intend to supply mitigation water for the City of North Bend? If so, how is this accounted for in the WSP?

5. Please provide a description of the seasonal variations in consumption patterns of each customer class.
6. Page 2-5, Table 2-7 Distribution System Leakage. Not all distribution system leakage calculations add up, for example 2017. The 2018 production and authorized consumption do not match the reported values in the Water Use Efficiency report. Please check the accuracy of these reports, Table 2-7, or both. Discuss discrepancies and make adjustments throughout out the plan as needed.
7. Page 2-9. Table 2-10. Total Number of Equivalent Residential Units. Wilderness Rim consumption appears to vary. Given the proportion of residential connections served by Wilderness Rim and importance of estimating average day demand per equivalent residential unit, please discuss the reliability of the Wilderness Rim consumption data. Did the Association have access to the wholesale meters throughout the period reported here? How old are the meters and what is the frequency of calibration verification? Review of Wilderness Rim's Water Use Efficiency reports suggest one meter underreported July 2016 through December 2016. Please explain the impact this has on the assumptions made in this chapter if any.
8. Table 2-11, Largest Water User Consumption for 2018 and Table 4-7 Equalizing Storage are based on 184 gallons per day average day demand per equivalent residential unit (184gpd/ERU) whereas Table 2-10, Total Number of Equivalent Residential Units, appears to be based on and page 2-12 refers to 198gpd/ERU. Please be consistent in use of average day demand per ERU for clarity or explain why it is appropriate to use one over the other.

System Analysis

9. In a coordinated water system plan area, booster pump stations serving a closed system must be able to provide fire flow at maximum day demand with the largest pump out of service. In this case, one of the 50hp pumps of the Edgewick Booster Pump Station (refer to page 1-15 discussion of 3,000gpm fire flow requirement and Tables 1-4 and 4-5). Please show the system meets this requirement or provide suggested system improvements with updated capital improvement schedule. Address a possible typo in Table 4-5 where BPS Capacity shows 3,000gpm and not 3,500gpm.

Water Use Efficiency/ Water Rights

No comment.

Source Protection

10. Please note that the contaminant inventory is required to be updated every two years. No response needed.
11. Page 6-7 refers to a template notification letter included in the Wellhead Protection Plan. We were unable to locate the template in Chapter 6 or Appendix I. Please include.
12. Consider a more comprehensive update of the 1998 wellhead protection plan (WHPP) for areas outside the Cedar River watershed. The plan should focus on agency engagement and community outreach and evaluate potential contamination that can occur with certain types of land uses. It should include specific actions needed to reduce the risk of contamination to the sources.
13. Figures 6-1 & 6-3 – Please updated these to include the delineation of each of the time of travels (6mon, 1yr, 5yr & 10yr) Please clearly describe what the dashed line in figure 6-3 is intended to

convey, what type of land uses should be allowed, conditioned or prohibited in this area. Also, clarify the situation with the gravel operation, does the system have concerns with the operation and potential water quality impacts.

Water Quality

14. Page 3-4. Table 3-3. Lead and Copper Monitoring Results should include the 90th percentile result since that is the result that applies to the action level.
15. Please discuss the investigative sampling, beyond the regulatory requirements, that the Association conducts. Have investigative water quality samples yielded fewer total coliform detections since the system began disinfection treatment?
16. The Coliform Monitoring Plan (CMP) satisfies most requirements. The distribution system is well represented by the routine sample sites. Regarding the CMP, we have the following comments.
    a. Please note the need to update the CMP with S06, Wellfield Wells 1,2,4, once Well 4 is in service. No response needed.
    b. Since Wilderness Rim, ID#75560, is a wholesale customer, if Wilderness Rim has a routine bacteriological sample that is positive, Wilderness Rim would need to contact the Association for follow-up with sampling at any well that was in use. While this information should be in the CMP for Wilderness Rim, the Association might note it in their own CMP for completeness.
    c. In Figure 8-1, Bacteriological Presence Detection Procedure, the diagram should indicate that the Tier 1 public notification is only required if the *E.coli* MCL is incurred. The final box (Has the water system had two Level 1 Assessments within a rolling 12-month period) should point to a Tier 3 public notification (due in one year) and not to a Tier 1 public notification (due in 24 hours). For providing notice regarding a Level 1 or Level 2 assessment (and for any positive bacteriological sample), the system must issue a Tier 3 public notification within 1 year.
    d. Please provide standard operating procedures for coliform routine and repeat sampling in the appendix with the CMP.
    e. The Source *E. coli* Response Plan needs to include the following requirements of the Groundwater Rule:
        i. A public notice is required within 24-hours of the lab reporting the *E.coli* positive source sample result to the Association. This is a Tier 1 public notice (PN). If the source is already treated to the 4-log virus inactivation standard prior to or at the first connection served by the source, it is possible that this PN would not have to include a Boil Water Advisory.
        ii. When *E.coli* is present in a source the utility must take corrective action as directed by the department. Under the Groundwater Rule, the options for corrective action are:
            1. Correct any source significant deficiencies that were identified in the most recent sanitary survey
            2. Provide an alternate source of water
            3. Eliminate the source of contamination, if the source of contamination can be determined; or

4. Provide treatment that reliably achieves at least 4-log treatment of viruses before or at the first customer served by the source.

iii. If not directed by the department to take corrective action, the utility shall collect five additional samples from the source within 24 hours of being notified of the *E.coli* positive source sample result.

Operations & Maintenance

17. Page 8-6 refers to the meter calibration verification frequency by size. Is this a recommendation or has the Association committed to this schedule? We agree that accurate meter readings are essential and advise committing to a schedule.
18. Does the Association inspect air/vacuum valves to ensure they operate properly as part of the preventative maintenance program?
19. Standard detail W12 and W13, show a very nice air/vacuum valve design. In our response to total coliform positive and *E.coli* positive distribution samples October 2019, we learned not all existing air/vacuum valve meet this standard (some vent below grade). Does the Association have a schedule or plan in place to update the existing air/vacuum valves to meet current standards? We encourage the Association to strongly consider this.
20. The system is required to have a Cross-Connection Control Program (CCCP) adopted by the governing body providing authority to implement the program. Appendix E. Cross-Connection Control appears to be a partially completed CCCP template. Please complete the CCCP and provide legal documentation of its adoption.

Distribution Facilities Design and Construction Standards

No comment.

Improvement Program

21. Page 8-6 refers to maintenance records as the precursor to developing an asset management database. Has the Association implemented an asset management program, which includes a remaining useful life assessment of major water system facilities? Please note that including your asset management program in the WSP results in added points in the ranking process for selecting State Revolving Fund projects to fund.

Financial Planning

No comment.

Other Documentation

22. Please include the Reclaimed Water Checklist in Appendix M, which appears to be empty.
23. The water system must meet the consumer input process outlined in WAC 246-290-100(8). Please include documentation of a consumer meeting discussing the WSP, prior to DOH approval of the WSP.
24. Prior to DOH approval, the Association's governing body must approve and adopt the WSP.
25. Please provide copies of any comments made by adjacent purveyors or other interested parties, along with the Association's response to those comments.

26. Provide statements of Local Government Consistency from any entities that have land use authority within your water service area.
27. Please have your engineers sign and date the PE stamp page for the final copy submitted to the Department.

Closing

We hope that you have found these comments to be clear, constructive and helpful in the development of your final draft WSP. We ask that you submit the revised WSP on or before **September 28, 2020.** In order to expedite the review of your revised submittal, please include a cover letter summarizing how each of the above comments was addressed in the revised WSP and where each response is located (i.e., page numbers, Appendices, etc.)

Regulations establishing a schedule of fees for review of planning, engineering, and construction documents have been adopted (WAC 246-290-990). The total cost is $3,705.00. An itemized invoice for the review of this project has been sent to the primary contact on file for your water system. Please note that this fee covers our current review and one more submittal for this project. If additional submittals are required, then an invoice for additional fees will be included with our final approval letter. Please remit complete payment in the form of a check or money order within thirty days of the date of this letter in the enclosed envelope or mail payment to: WSDOH, Revenue Section, PO Box 1099, Olympia WA 98507-1099.

Thank you again for submitting your revised Water System Plan for our review. If you have any comments or questions concerning our review, please contact me at (253) 395-6771.

Sincerely,

Richard Rodriguez

Richard Rodriguez
Regional Planner
(253) 395-6771

Brietta Carter

Brietta Carter, PE
Regional Engineer
(253) 395-6770

Enclosure (invoice)

cc: Jae Hill, King County UTRC
Seattle/King County Health
Ria Berns, WSDOE – NWRO
Warren Perkins, PE, Gray & Osborne