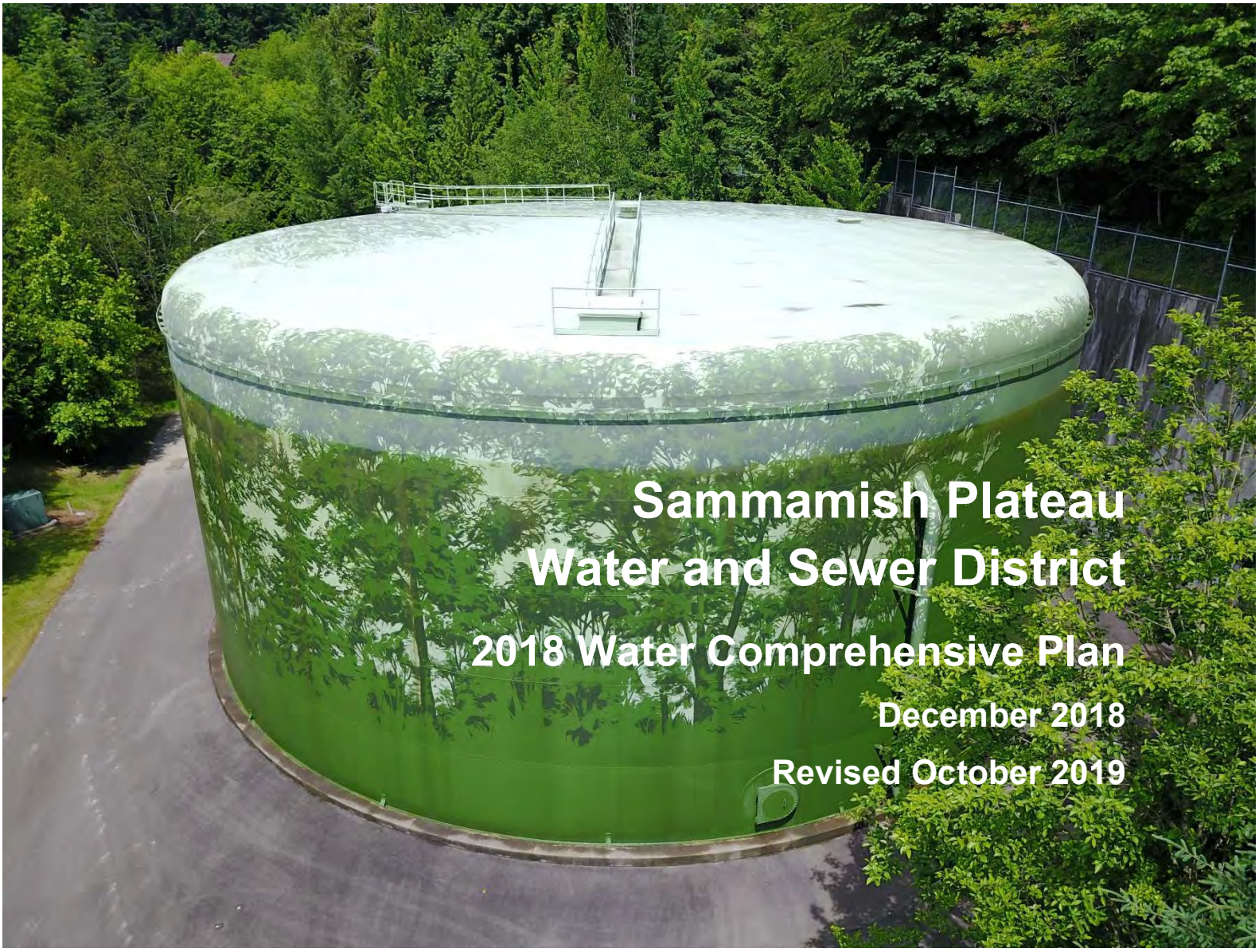

Sammamish Plateau Water and Sewer District

2018 Water Comprehensive Plan

December 2018

Revised October 2019

CHS ENGINEERS

For questions, call Kristina Westbrook,
King County Reclaimed Water Program Manager at (206) 296-5279
www.kingcounty.gov/reclaimedwater

King County

Water Reclamation Evaluation Checklist
For Systems with 1,000 or more Connections

The County and State recognize that changing conditions could initiate a need to respond in new ways to future water quality standards, wastewater discharge requirements, take advantage of advances in treatment technologies and/or allow our region to be positioned to respond to changes associated with climate change and population growth.

In 2003, Chapter 90.46 of the Revised Code of Washington (RCW) was amended to require public water systems serving 1,000 or more connections to evaluate opportunities for reclaimed water when completing their water system plans. Please use this checklist to meet King County consistency requirements in responding to this legislation.

Please use this checklist, including the inventory template, to ensure that your water system plan includes sufficient information about opportunities for reclaimed water and your system's efforts to develop those opportunities. If a question is not applicable or the information is unavailable, then answer, "unknown" or "n/a." King County will consider the checklist completed if each answer is filled in with the best available information, even if the utility states that it is not aware of any reclaimed water opportunities within its service area.

Water System Name: Sammamish Plateau Water & Sewer District
Date: 11/15/2019
PWS ID# 409009
Contact: Operations Manager, Andy Tuchscherer

1. **Identifying Potential Future Demand for Reclaimed Water:** King County maintains a database and map of potential reclaimed water users for evaluating future projects. Please use the template below, or similar table, to provide information to assist King County in further researching these potential uses.
   - **Large Utility Water Users** (choose one):
     - [x] Attached is an inventory of twenty large (above 20,000 gallons/month on average), non single-family residential, water users served by our utility that have a potential for reclaimed water use, or
     - [ ] Attached is an inventory of our utility's top twenty water users, or
     - [ ] The information requested is unknown or not available.

       Additional Comments: _____
   - **Large Self Suppliers** (choose one):
     - [x] Attached is an inventory of large, self-supplied water users within our water utility's service boundaries - especially those near wastewater treatment plants, mainlines, outfalls, and pump stations or similar reclaimed water facilities), or
     - [ ] The information requested is unknown or not available.

       Additional Comments: Lakeside Sand & Gravel, The Plateau Club Golf Course and Aldarra Golf Club
   - **Other** (choose one):
     - [ ] Attached is an inventory of other water users (such as those that are clustered near one another and could be served by a single system) that may be likely candidates for reclaimed water use, or
     - [x] The information requested is unknown or not available.

       Additional Comments: No other clustered use that is an apparent candidates

2. **Environmental Commitment**: Are you a city/town, or providing water service to a city/town, that has made commitments within resource management plans, salmon recovery plans, or other environmental initiatives for which there is a potential opportunity for using reclaimed water to assist in meeting commitments? (choose one)

   ☐ Yes, here are plans that have potential for reclaimed water use in our service area to meet the above commitments:
   _____
   _____

   ☑ The information requested is unknown, not available.
   Additional Comments: The District does not know of plans for using reclaimed water in cities of Sammamish and Issaquah

3. **Identifying Areas of Potential Use of Reclaimed Water for Environmental Benefit:**
   Below are ***examples*** of uses of reclaimed water ***that comply with State, Federal and other reclaimed water environmental, health and safety standards***. All of these uses are currently in effect somewhere in Washington State. To the best of your knowledge, are any of these potential uses for reclaimed water applicable to your area?

   River Augmentation (choose one):

   ☐ Yes, our water rights are limited by instream flows. For more information, King County may contact:
   _____
   _____

   ☑ The information requested is unknown, or not available.
   Additional Comments: Existing District water rights are not limited by instream flows

   Groundwater Recharge (choose one):

   ☑ Yes, we withdraw water from an aquifer that is in a groundwater management area, or from a declining aquifer, where water levels may need to be replenished or to maintain aquifer storage. For more information, King County may contact:
   East King County Groundwater Management Area, Planning Engineer - Jay Regenstreif

   ☐ The information requested is unknown, or not available.
   Additional Comments: _____

   Water Rights Mitigation (choose one):

   ☑ Yes, our area is pursuing, or planning to pursue, new or additional water rights, and there may be an opportunity to use reclaimed water for mitigation of those new water rights. For more information, King County may contact:
   Planning Engineer - Jay Regenstreif

   ☐ The information requested is unknown, or not available.
   Additional Comments: _____

   Potential Areas of Environmental Need (choose one):

   ☐ Yes, parts of our service area include potential environmental enhancement locations, such as wetlands enhancement, aquifer recharge, stream flow augmentation, that might be candidates for reclaimed water use. For more information, King County may contact:
   _____

   ☑ The information requested is unknown, or not available.
   Additional Comments: The ability to use reclaimed water for enhancement in the District is unknown.

4. **Local Reclaimed Water Legislation**: If water reclamation is mandated for this water system through local government agreement, contract, local regulations, ordinances, or other mechanisms, please provide a copy of the governing mechanism (choose one).

   ☐ Yes, local legislation exists in our area in support of reclaimed water use. The following relevant legislation is attached (please list titles of documents):

   _____

   _____

   ☑ No water reclamation legislation exists, or is known to exist, at a local level in our service area.

5. **Coordination with Local Wastewater Utility:** Include a brief description of your interactions with any wastewater or reclaimed water utility (King County or other) adjacent to your service area to evaluate any potential opportunities to develop reclaimed water (choose one).

   ☑ Describe if applicable:
   King County Waste Treatment Division has not approached the District to establish plans to supply and provide for the use of reclaimed water

   ☐ None. Additional Comments: _____

Template for
Inventory of Water Users and Identification of Potential Reclaimed Water Users

Site Owner or Site Name	Site Address (for general mapping purposes)	Estimated Annual Water Use	Water uses not requiring potable water[1]	Is this a Potential Reclaimed Water Customer?
Providence Pt Umbrella	4135-A Providence Point Dr SE, Issaquah	16,010,399	15,953,214	Irrigation
Klahanie HOA	4210 244th Pl SE, Sammamish	13,498,740	13,417,447	Irrigation
City of Sammamish	City Hall - 801 228th Ave SE, Sammamish	13,015,416	12,878,875	Irrigation
Issaquah School District 411	Headquarters - 565 NW Holly St, Issaquah	13,218,744	7,003,801	Irrigation
MS#2 Holland Residential,Summerwalk Apts	3850 Klahanie Dr SE, Issaquah	19,337,031	2,050,770	Irrigation
Trossachs HOA	1200 Trossachs Blvd SE, Sammamish	8,428,017	8,428,017	Irrigation
Timbers 8010/Simpson Housing	23425 SE Black Nugget Rd, Issaquah	15,333,995	1,394,683	Irrigation
Madison Sammamish Apartments	3070 230th Ln SE, Sammamish	15,395,059	2,248,704	Irrigation
Boulder Creek USCMF LLC	4425 Issaquah-Pine Lake Rd SE, Sammamish	10,678,614	3,458,880	Irrigation
Park Hill Apartments	22500 SE 56th St, Issaquah	12,067,694	1,813,854	Irrigation
SEA Inglewood 2010, LLC	22626 NE Inglewood Hill Rd, Sammamish	9,859,444	2,109,790	Irrigation
Sterling Square	1855 Trossachs Blvd SE, Sammamish	8,451,252	2,006,478	Irrigation
PWP CAL, LLC Langara Apartment	5105 Issaquah-Pine Lake Rd SE, Issaquah	8,627,717	2,866,131	Irrigation
Tanglewood @ Klahanie	25025 SE Klahanie Blvd, Issaquah	5,574,535	1,643,597	Irrigation
Center Village Assoc	4135-A Providence Point Dr SE, Issaquah	5,007,288	0	No
Sundance at Klahanie Bld A	25325 SE Klahanie Blvd, Issaquah	5,924,190	981,743	Irrigation
Forest Village Association	4135-A Providence Point Dr SE, Issaquah	4,952,254	0	No
Summerhill Village HOA	237xx SE Summerhill Ln, Issaquah	5,563,741	1,047,901	Irrigation
Cameray Condominiums	24100 SE 4th Pl, Sammamish	5,901,793	1,456,794	Irrigation
Jacobs Creek HOA	43xx Issaquah-Pine Lake Rd SE	4,814,821	1,105,710	Irrigation

[1] See Washington State Reclamation and Reuse Standards, September 1997, Section 1, Articles 1-5 for allowable uses of reclaimed water. http://www.ecy.wa.gov/PROGRAMS/WQ/reclaim/standards.html

SAMMAMISH PLATEAU
WATER AND SEWER DISTRICT

2018 Water Comprehensive Plan

December 2018

Revised October 2019

CHS Engineers, LLC
12507 Bel-Red Road, Suite 101
Bellevue, WA 98004
425-637-3693
www.chsengineers.com

This page intentionally left blank.

TABLE OF CONTENTS

Acknowledgements……xv

Acronyms and Abbreviations…….xvi

Certificate of Engineers…….xx

Executive Summary

Chapter 1 Description of Water System
1.1 Ownership and Management 1-1
1.2 System Background 1-4
1.2.1 History of Water System Development and Growth..... 1-4
1.2.1.1 Plateau Zone 1-7
1.2.1.2 Cascade View Zone..... 1-8
1.2.2 Geography 1-9
1.2.3 Neighboring/Adjacent Purveyors 1-9
1.2.4 Federal, State, and Local Regulations 1-14
1.3 Inventory of Existing Facilities 1-14
1.3.1 Plateau Zone 1-15
1.3.1.1 Source of Supply 1-15
1.3.1.2 Treatment 1-15
1.3.1.3 Storage 1-15
1.3.1.4 Transmission and Distribution Network 1-19
1.3.1.5 Pressure Zones 1-19
1.3.1.6 Booster Pump Stations 1-19
1.3.1.7 Pressure-Reducing Stations 1-20
1.3.1.8 Interties 1-20
1.3.1.9 Service Connections 1-20
1.3.2 Cascade View Zone..... 1-21
1.3.2.1 Source of Supply 1-21
1.3.2.2 Treatment 1-21
1.3.2.3 Storage 1-21
1.3.2.4 Transmission and Distribution Network 1-24
1.3.2.5 Pressure Zones 1-24
1.3.2.6 Booster Pump Stations 1-24
1.3.2.7 Pressure-Reducing Stations 1-25
1.3.2.8 Interties 1-25
1.3.2.9 Service Connections 1-25
1.4 Related Plans 1-25

1.5 Existing Service Area Characteristics……1-29
1.6 Future Service Area……..1-31
1.7 Service Area Agreements……1-33
1.7.1 Northeast Sammamish Sewer & Water District 1-33
1.7.2 Issaquah 1-33
1.7.3 Union Hill Water Association.....1-34
1.7.4 Dawnbreaker Water Association.....1-34
1.7.5 Overdale Water Association 1-34
1.7.6 Ames Lake Water Association 1-34
1.7.7 City of Redmond 1-34
1.8 Service Area Policies 1-34
1.8.1 Wholesaling Water.....1-34
1.8.2 Wheeling Water 1-35
1.8.3 Annexation.....1-35
1.8.4 Direct Connection and Remote Systems 1-35
1.8.5 Design and Performance Standards.....1-38
1.8.6 Surcharge for Outside Customers 1-38
1.8.7 Formation of Utility Local Improvement Districts.....1-38
1.8.8 Urban Growth Area.....1-38
1.8.9 Reimbursement (Latecomer) Agreements.....1-39
1.8.10 Oversizing.....1-39
1.8.11 Cross-Connection Control Program.....1-39
1.8.12 System Extension 1-39
1.8.13 Drinking Water Quality.....1-40
1.9 Satellite Management Agencies 1-41
1.10 Conditions of Service.....1-41
1.10.1 District Responsibilities.....1-41
1.10.2 Customer Responsibilities 1-43
1.10.3 Connection Fee Schedule.....1-43
1.10.3.1 General Facility Charges.....1-44
1.10.3.2 Local Facility (Mainline) Charges 1-44
1.10.3.3 Meter Installation/Drop Fees 1-45
1.10.3.4 Regional Capital Facility Charges 1-45
1.10.3.5 Installation Permit Fees.....1-45
1.10.4 Meter and Materials Specifications 1-45
1.10.5 Consent Agreements for Inspection, Maintenance, and Repair Activities That May Disrupt Water Service…….. 1-46
1.10.6 Cross-Connection Control Requirements 1-46
1.10.7 Latecomer Payback Provisions.....1-46
1.10.8 Developer Extension Requirements, Design Standards, Financing Responsibilities 1-46
1.11 Complaints.....1-46

Chapter 2 Basic Planning Data and Water Demand Forecasting
2.1 Current Population, Service Connections, Water Use, and Equivalent Residential Units…… 2-1
2.1.1 Current Population……..…2-1
2.1.2 Total Service Connections……..…... 2-1
2.1.3 Water Use Data Collection……2-3
2.1.4 Equivalent Residential Units…….....2-11
2.2 Projected Land Use, Future Population, and Water Demand……2-14
2.2.1 Projected Land Use……2-14
2.2.2 Projected Population……... 2-14
2.2.2.1 Near-term ERU Forecast……..2-15
2.2.2.2 Long-term ERU Forecast…… 2-17
2.2.3 Water Demand Forecast……2-25

Chapter 3 System Analysis
3.1 Source Capacity Analysis 3-1
3.1.1 Design Criteria 3-1
3.1.2 Source Capacity Evaluation..... 3-1
3.1.2.1 Plateau Zone..... 3-1
3.1.2.2 Cascade View Zone 3-5
3.2 Storage Capacity Analysis……..3-6
3.2.1 Design Criteria 3-6
3.2.1.1 Operating and Dead Storage Volumes 3-6
3.2.1.2 Equalizing Volume 3-7
3.2.1.3 Fire Flow Volume..... 3-7
3.2.1.4 Standby Volume 3-7
3.2.2 Storage Capacity Evaluation..... 3-8
3.2.2.1 Plateau Zone Summary 3-9
3.2.2.2 Cascade View Zone System-wide Summary 3-24
3.3 Distribution System Analysis..... 3-29
3.3.1 Analysis Methodology 3-29
3.3.2 System Components..... 3-29
3.3.3 Water Demand Allocation 3-30
3.3.4 Calibration..... 3-30
3.3.5 Modeling Scenarios 3-32
3.3.6 Peak Hour Analysis Results..... 3-32
3.3.6.1 Plateau Zone 3-32
3.3.6.2 Cascade View Zone..... 3-34
3.3.7 Fire Flow Analysis Results……3-37
3.3.7.1 Plateau Zone……..3-37
3.3.7.2 Cascade View Zone……..3-44
3.3.8 Redundancy Analysis……3-48

Chapter 4 Conservation, Supply Analysis, Water Rights, System Reliability, and Interties
4.1 Conservation Program……...4-1
4.1.1 Conservation History…… 4-1
4.1.2 Conservation Requirements and Compliance Summary……4-2
4.1.3 Historical Conservation Program……4-6
4.1.3.1 Measures ……4-6
4.1.3.2 Savings Achieved by Historical Program……..4-22
4.1.4 Conservation Program for 2014-2019……..4-27
4.1.4.1 Goal……..4-27
4.1.4.2 Conservation Measures……4-30
4.1.4.3 Estimated Savings and Budget……4-35
4.1.4.4 Impact on Demand…… 4-42
4.2 Source of Supply Strategy……..4-46
4.3 Water Rights Evaluation……..4-48
4.4 Aquifer Storage and Recovery Program……4-55
4.4.1 Overview…… 4-55
4.4.2 Program Objectives…… 4-57
4.4.3 Interpretation of Storage and ASR Program Success…….. 4-58
4.5 Water System Reliability……..4-59
4.5.1 Source Reliability……4-59
4.5.1.1 Plateau Zone…….....4-59
4.5.1.2 Cascade View Zone……4-60
4.5.2 Distribution System Reliability…….. 4-60
4.6 Interties……4-60

Chapter 5 Source Water Protection
5.1 Overview……5-1
5.2 Susceptibility Assessment……5-2
5.3 Wellhead Protection Areas……5-2
5.4 Contaminant Source Inventory……5-3
5.4.1 Inventory Approach……..5-3
5.4.2 Data Sources……..5-3
5.4.3 Inventory Results……..5-7
5.4.3.1 Lower Reid Infiltration Gallery……..5-15
5.4.3.2 Per- and Polyfluorinated Compound (PFAS) Plume……...5-15
5.4.4 Additional Potential Sources of Contamination……..5-17
5.5 Notification……5-17
5.6 Contingency Plan……5-21
5.7 Spill Response……..5-22
5.8 Regional Coordination……5-23

Chapter 6 Operation and Maintenance Program
6.1 Water System Management and Personnel……6-1
6.2 Certification, Training, and Membership in Professional Organizations……..6-6
6.2.1 Training and Professional Organization Membership……..…6-7
6.3 System Operation and Control……...6-8
6.3.1 Identification of Major System Components……..6-8
6.3.1.1 Plateau Zone Components…… 6-24
6.3.1.2 Cascade View Zone Components…… 6-31
6.3.2 Routine System Operation and Preventative Maintenance…… 6-33
6.3.3 Chemicals, Equipment, Supplies, and Maintenance Contractors…...6-34
6.4 Comprehensive Monitoring (Regulatory Compliance) Plan..6-34
6.4.1 Introduction and Approach…… 6-34
6.4.2 System Overview…… 6-35
6.4.3 Drinking Water Regulatory Framework……6-35
6.4.4 Effective Drinking Water Regulations……..6-36
6.4.5 Source and Treatment Regulations…… 6-38
6.4.5.1 Surface Water Treatment Rule……..6-38
6.4.5.2 Groundwater Rule…… 6-39
6.4.5.3 Phase I, II, and V Rules (Inorganic & Organic Chemicals)… 6-42
6.4.5.4 Arsenic Rule……..…… 6-49
6.4.5.5 Radionuclides Rule…… 6-50
6.4.5.6 Unregulated Contaminant Monitoring Rule…… 6-51
6.4.6 Distribution System Regulations……6-53
6.4.6.1 Total Coliform Rule…….. 6-53
6.4.6.2 Stage 1 Disinfectant/Disinfection By-Products Rule…….. 6-54
6.4.6.3 Stage 2 Disinfection By-Products Rule…… 6-55
6.4.6.4 Lead and Copper Rule…… 6-57
6.4.7 Other Regulations…… 6-60
6.4.7.1 Consumer Confidence Reports and Public Notification Rule……6-60
6.4.7.2 Operator Certification…….. 6-61
6.4.8 Recently Promulgated and Anticipated Drinking Water Regulations.. 6-61
6.4.8.1 Unregulated Contaminant Monitoring Rule 4…….. 6-62
6.4.8.2 Lead and Copper Rule Long Term Revisions……6-62
6.4.8.3 Perchlorate …….. 6-65
6.4.9 Certified Laboratories Used for Sample Analyses……..6-65
6.4.10 Response to Customer Inquiries and Complaints……6-66
6.4.11 Summary of Regulatory Status……6-66
6.4.11.1 Monitoring Plans…… 6-68
6.4.11.2 Bacteriological Monitoring Plan……6-69
6.4.11.3 Inorganic Chemical, Physical Contaminant, Organic Chemical, Radionuclide Monitoring Plans……..…….. 6-82
6.4.11.4 Lead and Copper Monitoring Plan.....6-82

6.5 Emergency Response Program……6-84
6.5.1 Emergency Response……...6-84
6.5.2 Emergency Response Plan ……..……6-85
6.5.3 Emergency Response Plan, Volume 1.....6-86
6.5.3.1 Chapter 1: Introduction……..6-86
6.5.3.2 Chapter 2: Emergency Preparedness: District Planning…..6-86
6.5.3.3 Chapter 3: Emergency Preparedness: Implementing District Planning……. 6-87
6.5.3.4 Chapter 4: Emergency Preparedness: Response Organization……6-87
6.5.3.5 Chapter 5: Emergency Preparedness: Response Process..6-89
6.5.4 Emergency Response Plan, Volume 2: Response……6-90
6.5.5 Emergency Response Plan, Volume 3: Resource Manual ……..… 6-90
Chapter 1 – COMMUNICATIONS AND RADIO
Chapter 2 – FACILITY INFORMATION
Chapter 3 – GENERATORS
Chapter 4 – AGENCIES, CONTRACTORS, SUPPLIERS AND FUEL SUPPLIERS
Chapter 5 – MEDICAL/HOSPITAL
Chapter 6 – MUTUAL AID
6.5.6 Emergency Response Plan, Volume 4: Vulnerability Assessment….6-91
6.5.7 Emergency Response Plan, Volume 5: District Water Facilities…….6-92
6.5.8 Emergency Response Plan, Volume 6: District Sewer Facilities…… 6-92
6.5.9 Seismic Resiliency……..6-92
6.5.10 Coliform Monitoring Plan & Triggered Ground Water Monitoring Plan……6-93
6.6 Safety Procedures……..……..…..6-93
6.7 Cross-Connection Control Program……....6-96
6.8 Customer Complaint & Inquiry Response…….……....6-100
6.9 Recordkeeping……..….....6-103
6.10 Reporting.……..…6-105
6.11 Operation and Maintenance Improvements …..…….……6-106
6.12 Water Shortage Response Plan……..……6-107

Chapter 7 Distribution Facilities Design and Construction Standards
7.1 Project Review Procedures…….……...7-1
7.2 Policies and Requirements for Outside Parties….……7-1
7.2.1 Developer Extension Agreement…….…7-1
7.2.2 Pipe Looping Requirements……7-3
7.2.3 Fire Flow…….……7-3
7.2.4 Other Requirements……..7-3
7.3 Design Standards……7-4
7.3.1 Water Service Pressure……7-4
7.3.2 Pipeline Velocities……..7-4

7.3.3 Pipelines…….. 7-4
7.3.4 Storage Tanks…… 7-5
7.3.5 Booster Pumps……... 7-5
7.3.6 Pressure-Reducing Valve Stations…… 7-5
7.3.7 Valves…….. 7-5
7.3.8 Hydrants…….. 7-6
7.4 Construction Standards…… 7-6
7.4.1 Ductile-Iron Pipe……7-6
7.4.2 Polyvinyl Chloride Pipe…… 7-6
7.4.3 High-Density Polyethylene Pipe…….. 7-7
7.4.4 Valves…….. 7-7
7.4.5 Backflow Prevention Assemblies…… 7-8
7.4.6 Fire Hydrants…….. 7-8
7.4.7 Pipe Laying…… 7-8
7.4.8 Connection to Existing Main……7-8
7.4.9 Water Service Connections……..7-9
7.4.10 Fire Hydrant Installation……7-9
7.5 Construction Certification and Follow-Up Procedures……..7-9
7.5.1 Hydrostatic Tests……7-9
7.5.2 Sterilization and Flushing of Water Mains…… 7-10
7.5.3 As-Builts……7-10
7.5.4 Notice of Completion……7-11

Chapter 8 Capital Plan
8.1 Development of CP 8-1
8.2 Planned Projects.....8-2
8.2.1 Combined Water and Sewer Projects.....8-11
8.2.2 General Water System.....8-12
8.2.3 Water Supply 8-13
8.2.4 Booster Pumping 8-13
8.2.5 Water Storage.....8-14
8.2.6 Water Distribution System 8-16
8.2.6.1 Plateau Zone 8-16
8.2.6.2 Cascade View Zone.....8-29

Chapter 9 Financial Summary
9.1 Past Financial History……9-1
9.2 Review of the District's Water Rates……..9-4
9.3 Development of the Financial Analysis……9-6
9.3.1 Revenues and Expenses……..9-6
9.3.1.1 Revenues……...9-6
9.3.1.2 Expenses……...9-7
9.3.2 Internal Sources of Funds……..9-10
9.3.3 External Sources of Funds……9-11
9.4 Water General Facilities Charge……....9-12

9.4.1 Existing Cost Basis…….....9-13
9.4.2 Future Cost Basis…….....9-14
9.4.3 Customer Base……9-14
9.4.4 GFC Calculation……..9-14
9.5 Summary of the Financial Analysis……..9-17
9.6 Rate Impacts……...9-17
9.7 Summary……..9-20

Chapter 10 Implementation
10.1 Chapter 1: Description of Water System……10-1
10.1.1 Implementation Considerations (Chapter 1)……10-1
Regulations…… .10-1
Service Area……10-2
Service Provision……10-2
10.2 Chapter 2: Basic Planning Data and Water Demand Forecast……...10-2
10.2.1 Implementation Considerations (Chapter 2)……...10-3
10.3 Chapter 3: System Analysis……...10-3
10.3.1 Implementation Considerations (Chapter 3)…… 10-3
10.4 Chapter 4: Conservation Program, Supply Analysis, Water Rights, System Reliability and Interties……..10-4
10.4.1 Implementation Considerations (Chapter 4)……10-4
Conservation Program……10-4
Source of Supply Strategy, Water Rights Evaluation, Aquifer Storage and Recovery Program, Water System Reliability and Interties……..10-4
10.5 Chapter 5: Source Water Protection……10-5
10.5.1 Implementation Considerations (Chapter 5)……10-5
10.6 Chapter 6: Operations and Maintenance Program……...10-6
10.6.1 Implementation Considerations (Chapter 6)……...10-6
Training and Management…….....10-6
Water Quality Requirements…….....10-7
Emergency Response, Safety and Cross-Connection Control Programs……..10-8
10.7 Chapter 7: Distribution Facilities Design and Construction Standards……10-9
10.7.1 Implementation Considerations (Chapter 7)……..10-9
10.8 Chapter 8: Capital Plan……...10-9
10.8.1 Implementation Considerations (Chapter 8)……..10-9
10.9 Chapter 9: Finance Plan……10-10
10.9.1 Implementation Considerations (Chapter 9)……....10-10
Rates ……10-10
General Facility Charge…….. 10-10
Funding Capital Improvement Projects……....10-11

TABLES

2-1 Sizes and Types of Meters by Customer Class……. 2-2
2-2 Multi-Family Units Per Connection…….. 2-3
2-3 Summary of Historical Water Production and Consumption (2009-2016) 2-4
2-4 Historical Annual Water Production and Purchases by Source (2009-2016).. 2-5
2-5 Historical Monthly Water Production and Purchases (2009-2016)……. 2-6
2-6 Historical Annual Water Consumption by Customer Classification (2009-2016)……..2-8
2-7 Historical Bi-Monthly Retail Water Sales (2009-2016)……2-10
2-8 Equivalent Residential Units (ERUs) and Meter Size…….. 2-12
2-9 Historical Equivalent Residential Unit (ERU) Analysis (2014-2016)……..2-13
2-10 Summary of ERU Forecast by Jurisdiction (2017- Buildout)…… 2-16
2-11 Analysis of Projected Demographic City of Sammamish Growth Rates (Based on Comprehensive Plans)…… 2-19
2-12 Analysis of Projected Demographic City of Issaquah Growth Rates (Based on Comprehensive Plans)……..2-20
2-13 Analysis of Projected Demographic Growth Rates (Based on PSRC Data)… 2-22
2-14 Comparison of Demographic Growth Rates……..2-23
2-15 ERU Forecast (2017-2037) by Service Zone and Customer Classification……...2-24
2-16 Water Demand Forecast (2017-2037) by Service Zone and Customer Classification…….....2-26
2-17 Water Demand Forecast Summary Without and With Additional Efficiency… 2-28

3-1 Evaluation of Source Adequacy for Plateau Zone (Summer Months, Peak Season)……3-2
3-2 Evaluation of Source Adequacy for Plateau Zone Groups (Summer Months, Peak Season)……3-3
3-3 Evaluation of Source Adequacy for Cascade View Zone……. 3-5
3-4 Summary of Plateau Zone Storage Capacity Analysis…… 3-10
3-5 Evaluation of Storage Adequacy for 700 Zone…… 3-13
3-6 Evaluation of Storage Adequacy for 650 Zone…….... 3-15
3-7 Evaluation of Storage Adequacy for 297 Zone…… 3-17
3-8 Summary of Cascade View Zone Storage Capacity Analysis…… 3-24
3-9 Storage Tank Geometry and Utilization Summary…….. 3-28
3-10 2037 Fire Flow Deficiencies – Plateau Zone…….…… 3-43
3-11 2037 Fire Flow Deficiencies – Cascade View Zone……3-47

4-1 Water Use Efficiency Rule Requirements and District Compliance…….....4-3
4-2 Historical Conservation Program……...4-7
4-3 Single Family Rates (Effective January 1, 2019): Fixed Base Rates…… 4-13
4-4 Single Family Rates (Effective January 1, 2019): Increasing Block Consumption Rates…… 4-14
4-5 Rates for Multifamily Customer Classes (Effective January 1, 2019)……4-14

4-6 Rates for Public Institutional, Commercial and Industrial Classes (Effective January 1, 2019)……4-15
4-7 Rates for Irrigation Customer Classes (Effective January 1, 2019)……...4-15
4-8 Annual Consumption for the years 1994-2017 (Includes all authorized billed and unbilled consumption 2006-2017)……4-23
4-9 Peak Summer Consumption for 1994-2017 (for the months of June, July, August and September ……..4-26
4-10 2014-2019 Future Conservation Program ……..…4-29
4-11 Savings and Cost Summary……4-36
4-12 Savings Schedule and Impact on Average Demand …….....4-44
4-13 Savings Schedule and Impact on Peak Season Demand .....……..……..4-45
4-14 Water Rights Self-Assessment – Plateau Zone……..……..4-50
4-15 Water Rights Self-Assessment – Cascade View Zone……..……..4-53
4-16 ASR Injection Volume and Recovery Compared to Existing Water Rights…..4-56

5-1 Summary of Water Well Data…… 5-5
5-2 List of Potential Contaminant Sources…… 5-7
5-3 Potential Source Contamination Notifications……...5-20
5-4 Emergency Response Plan Emergency Responders…… 5-22

6-1 District Management…….……6-2
6-2 Current Water System Operations Full-Time Equivalents…… 6-5
6-3 Combined Water Operation Routine and Preventative Maintenance Staffing Level Required for Water Operators……...6-6
6-4 Current Personnel - Water System Related Certifications……..6-7
6-5 Major System Components – Supply Sources……....6-8
6-6 Major System Components – Treatment Facilities……6-9
6-7 Major System Components – Storage Facilities..... 6-11
6-8 Major System Components – Water Distribution System…… 6-12
6-9 Major System Components – Booster Pump Stations…… 6-14
6-10 Major System Components – Pressure Reducing Stations……..……..... 6-15
6-11 Major System Components – Control Valves ...……..……..6-18
6-12 Major System Components - Additional Zone Valves …… 6-20
6-13 Major System Components – Interties…..……..……6-23
6-14 Applicable Safe Drinking Water Act Regulations……..... 6-37
6-15 Inorganic Chemicals – Regulatory Levels and District Monitoring Results (2009 to 2016)…….....6-43
6-16 Synthetic Organic Chemicals - Regulatory Levels and District Monitoring Results (2009 to 2016)……6-44
6-17 Volatile Organic Chemicals – Regulatory Levels and District Monitoring Results (2009 to 2016)…….....6-47
6-18 Arsenic Rule – Regulatory Levels and District Monitoring Results (2009 to 2016)……6-50
6-19 Stage 1 D/DBP Rule – Regulatory Levels and District Monitoring Results (2009 to 2012)……..6-55

6-20 Stage 2 D/DBP Rule – Regulatory Levels and District Monitoring Results (2013 to 2017)……..6-57
6-21 Lead and Copper Rule Revisions, 2007…….6-58
6-22 Lead and Copper – Regulatory Levels and District Monitoring Results (2010, 2013 and 2016)…….....6-60
6-23 Recently Promulgated and Anticipated Regulations Under the Safe Drinking Water Act……... 6-62
6-24 Summary of Applicable Regulations and Compliance Status…… 6-66
6-25 Monthly Bacteriological Monitoring Locations……6-69
6-26 Inorganic Chemical, Physical Contaminant, Organic Chemical, Radionuclide Monitoring Locations…… 6-82
6-27 Lead and Copper Monitoring Locations…… 6-83
6-28 Evaluation of Emergencies…….. 6-86
6-29 Phases of Response…… 6-87
6-30 Workplace Hazards……6-95
6-31 Estimated Staff Time Required to Implement Cross-connection Control Program (1 FTE = 1,788 hours)……6-99
6-32 Customer Complaints and Inquiries…….. 6-101
6-33 Record Keeping…… 6-104
6-34 Operation and Maintenance for System Growth…… 6-106

7-1 Service Area Governing Fire Guidelines……...7-4

8-1 Capital Improvement Program (2018 – 2037)……..8-4

9-1 Summary of Operating Financial History ($000s)…….....9-2
9-2 Current Water Rates (as of January 1, 2019)…… 9-5
9-3 Current Water GFCs and LFCs (as of July 17, 2018)…….. 9-6
9-4 Summary of Water Capital Projects ($000s)……..... 9-9
9-5 Updated Water GFC Calculation……9-16
9-6 Summary of the Ten-Year Financial Plan ($000s)…….....9-18
9-7 Water Rate Forecast……9-19

FIGURES

1-1 Service Area Boundaries…… . .. 1-2
1-2 2018 District Organization Chart……1-3
1-3 District ERU History…….. 1-5
1-4 Water System History…….. 1-6
1-5 Topography……...1-11
1-6 Adjacent Water Purveyors…… 1-12
1-7 Group B Groundwater Sources……..... 1-13
1-8 Existing Facilities Plateau Zone…… 1-16
1-9 Plateau Zone Hydraulic Profile……..1-17

1-10 Fluoridation and Chlorination Areas…….. 1-18
1-11 Existing Facilities Cascade View Zone……... 1-22
1-12 Cascade View Zone Hydraulic Profile …… 1-23
1-13 Zoning…….. 1-30
1-14 Annexation Areas……..1-32

2-1 Historical Monthly Water Production and Purchases (2014 – 2016)…… 2-7
2-2 Average Water Consumption by Percent of Total (2014 – 2016)…… 2-9
2-3 Bi-Monthly Retail Water Sales …….. 2-10
2-4 Bi-Monthly Retail Water Sales by Customer Class (2014 – 2016)…….. 2-11
2-5 Zoning Classifications Based on Area…….. 2-14
2-6 Future Demand Development Logic…… 2-18

3-1 Storage Components…….....3-6
3-2 3.0 MG Tank - 700 Zone Group…… 3-19
3-3 7.0 MG Tank - 650 Zone Group…… 3-20
3-4 2.0 MG Tank – 650 Zone Group…….. 3-21
3-5 Section 36E and 36W Tanks (4.0 MG Each) – 650 Zone Group…… 3-22
3-6 297 Tank (2.25 MG) – 297 Zone Group…….. 3-23
3-7 Well 12 Tank (0.60 MG) – Cascade View Zone Group…… 3-26
3-8 Well 13R Tank (0.28 MG) – Cascade View Zone Group…….. 3-27
3-9 2037 Peak Hour Pressure – Plateau Zone…… 3-35
3-10 2037 Peak Hour Pressure – Cascade View Zone…… 3-36
3-11 Fire Flow Targets…… 3-40
3-12 2037 Fire Flow Deficiencies – Plateau Zone…… 3-41
3-13 Fire Flow Improvements – Plateau Zone…… 3-42
3-14 2037 Fire Flow Deficiencies – Cascade View Zone…… 3-45
3-15 Fire Flow Improvements – Cascade View Zone…… 3-46
3-16 Redundancy Projects – Plateau Zone…….. 3-50
3-17 Redundancy Projects – Cascade View Zone…… 3-51
4-1 Number of Customers (as ERUs) Compared to Annual Consumption 1994-2017……..4-25
4-2 Number of Customers (as ERUs) Compared to Peak Consumption (June-September) 1994-2017…… 4-27
4-3 Savings by Sector (annual average) 4-40
4-4 Savings by Sector (peak season) 4-40
4-5 Indoor vs. Outdoor Savings (annual average) 4-41
4-6 Indoor vs. Outdoor Savings (peak season) 4-41
4-7 Hardware vs. Behavior Savings (annual average) 4-42
4-8 Hardware vs. Behavior Savings (peak season) 4-42

5-1 Inventory of Potential Contaminant Sources……5-13
5-2 Inventory of Potential Contaminant Sources (Wells 7, 8, 9)……..5-14
5-3 Lower Issaquah Valley PFAS Characterization Exploration Areas……..5-19

6-1 2018 District Organizational Chart……6-3

6-2 Sampling Stations by Week ……6-81
6-3 Sammamish Plateau Water Incident Command System Organization……6-89

8-1 CIP - Pipe Projects - Plateau Zone……..……....8-7
8-2 CIP - Pipe Projects - Cascade View Zone……..……...8-8
8-3 CIP – Other Projects – Plateau Zone……..….…..8-9
8-4 CIP – Other Projects – Cascade View Zone…….……. 8-10

APPENDICES

Appendix

A Water Facilities Inventory
B History of Moratoriums and Allocations, and Group B Water Systems in Future RWSA
C Well Data Sheets, 2008-2016 Water Production
D Intertie and Interagency Agreements
E Future Water Connection Agreement
F Design Standards
G District Resolutions (GFCs, LFCs, ULIDs)
H Reimbursement Agreement
I Developer Extension Agreement
J Water Quality Monitoring
K Application for Water Service
L Cross-Connection Control Program
M Hydraulic Model Development and Calibration
N Cascade WUE Goal and Reclaimed Water Analysis
O Well Susceptibility Forms
P Wellhead Protection Area Delineation Update
Q Spill Incident Response Plan
R Operation and Maintenance Program Details
S Water Shortage Response Plan
T Financial Summary Appendix
U SEPA Checklist
V Draft Plan Comments and Responses

Acknowledgements

The Sammamish Plateau Water and Sewer District Board of Commissioners, staff, and their consultants have played an integral part in preparing this document. Their invaluable assistance and contributions to all elements presented herein have shaped this document to reflect the values of the community and the role of the region as the District prepares to meet the upcoming needs of the water service area. Thanks and appreciation are extended to the following commissioners, staff, and consultants.

Sammamish Plateau Water and Sewer District

Commissioners
Lloyd Warren, President
Mahbubul Islam, Vice President
Mary Shustov, Secretary
Tom Harman, Commissioner
Ryika Hooshangi, Commissioner

Staff
Jay Krauss, General Manager
Jay Regenstreif
Andy Tuchscherer
John Anderson
Angel Barton
Kyle Wong
Janet Sailer
Kevin DeRouen

CHS Engineers, LLC
Rodney Langer

CDM Smith, Inc.
Scott Coffey

Murraysmith, Inc.
David Stangel
Michele Cusick

FCS GROUP
Chris Gonzales

Inslee, Best, Doezie & Ryder, P.S.
John Milne

ACRONYMS AND ABBREVIATIONS

2010 Plan	2010 Water Comprehensive Plan
2012 Plan Amendment	2012 Water Comprehensive Plan Amendment
AC	asbestos concrete
ac-ft	acre-feet
ADD	average day demand
af/yr	acre-foot per year
AMCL	alternative maximum contaminant levels
APWA	American Public Works Association
ASR	aquifer storage and recovery
ASTM	American Society for Testing and Materials
AWWA	American Water Works Association
BIP	Cascade Bellevue-Issaquah Pipeline
Board	Board of Commissioners
CARA	Critical Aquifer Recharge Area
Cascade	Cascade Water Alliance
CCCP	Cross-Connection Control Program
ccf	100 cubic feet
CCR	Consumer Confidence Report
cf	cubic feet
CIP	Capital Improvement Project
CP	Capital Plan
CPA	Conservation potential assessment
CU	copper
D/DBP	Stage 1 Disinfectants/Disinfection By-Products
DEA	Developer Extension Agreement
DI	ductile iron
District	Sammamish Plateau Water and Sewer District
DOH	Washington State Department of Health
DU	dwelling units
DWSRF	Drinking Water State Revolving Fund
Ecology	Washington State Department of Ecology
EKCCWSP	East King County Coordinated Water System Plan
EOC	Emergency Operations Center
ERP	Emergency Response Plan
ERU	Equivalent Residential Unit
ESWTR	Enhanced Surface Water Treatment Rule
ET	Evapotranspiration
F/SID	Washington State Department of Ecology's Facility/Site Identification System
FAC	Federal Advisory Committee
fps	feet per second

ft	feet
FTE	full time equivalents
FWSA	Future Water Service Area
GFC	general facility charge
GIS	Geographical Information Services
gpd	gallons per day
gpf	gallons per flush
gpm	gallons per minute
GWR	Groundwater Rule
HAA	haloacetic acid
HDPE	high-density polyethylene
HGL	hydraulic grade line
HPC	heterotrophic plate count
ICI	Institutional, Commercial and Industrial
IDSE	Initial Distribution System Evaluation
IBC	International Building Code
IFC	International Fire Code
IOC	inorganic compound
ISO	Insurance Services Office
IT	Information Technology
KCFD	King County Fire District
KCWD	King County Water District
LCR	Lead and Copper Rule
LIDs	Local Improvement Districts
LIVA	Lower Issaquah Valley Aquifer
LRAA	location-specific running annual average
LRIG	Issaquah Highlands Lower Reid Infiltration Gallery
MCL	maximum contaminant levels
MDD	maximum day demand
MF	Multi-Family
MG	million gallons
mg/L	milligrams per liter
µg/L	micrograms per liter
mgd	million gallons per day
MMM	multimedia mitigation
MPD	Master Planned Development
MRDLs	Residual Disinfectant Levels
NESSWD	Northeast Sammamish Sewer & Water District
NIMS	National Incident Management System
NOM	natural organic matter
O&M	Operations and Maintenance

OIT	Operators-In-Training
OSHA	Occupational Health and Safety Administration
PAA	Potential Annexation Areas
ppm	parts per million
PAS	Plateau Aquifer System
pCI/L	picocuries per liter
PFAS	Per- and Polyfluoroalkyl Substances
PFOS	perfluorooctanesulfonic acid
PFOA	perfluorooctanoic acid
PHD	peak hour demand
Plan	Water Comprehensive Plan
PNR	Public Notification Rule
PPE	Personal Protection Equipment
PPHH	persons per household
PRV	pressure reducing valve
PSE	Puget Sound Energy
psi	pounds per square inch
PSRC	Puget Sound Regional Council
PVC	polyvinyl-chloride
PWS	Public Water System
PWTF	Public Works Trust Fund
Qa	annual quantity
Qi	instantaneous quantity
RCFC	Regional Capital Facility Charge
RCW	Revised Code of Washington
SCADA	Supervisory Control and Data Acquisition
SDWA	Safe Drinking Water Act
SEPA	State Environmental Policy Act
SMA	Satellite Management Agencies
SMP	Standard Monitoring Program
SOCs	synthetic organic compounds
SPU	Seattle Public Utilities
SSMA	Satellite System Management Agency
SSS	System-Specific Study
SVAR	Seismic Vulnerability Assessment Report
SWTR	Surface Water Treatment Rule
TAZ	Traffic Analysis Zone
TCR	Total Coliform Rule
TOT	Time of Travel
TSP	Cascade Water Alliance Transmission and Supply Plan
TTHM	total trihalomethanes
UCMR	Unregulated Contaminant Monitoring Rule

UGA	Urban Growth Area
UHWA	Union Hill Water Association
UIC	Underground Injection Control
ULIDs	Utility Local Improvement Districts
UPC	Uniform Plumbing Code
USEPA	United States Environmental Protection Agency
VAS	Valley Aquifer System
VOCs	volatile organic compounds
WAC	Washington Administrative Code
WASWD	Washington Association of Sewer and Water Districts
WFI	Water facilities inventory
WHPA	Wellhead protection area
WHPP	Wellhead protection program
WSDOT	Washington State Department of Transportation
WSP	Waster System Plan
WSRP	Water Shortage Response Plan
WUCC	East King County Water Utility Coordinating Committee
WUE Rule	Water Use Efficiency Rule

2018 WATER COMPREHENSIVE PLAN

SAMMAMISH PLATEAU
WATER AND SEWER DISTRICT

December 2018

Revised October 2019

CHS ENGINEERS, LLC

Rodney Langer, P.E.
Project Manager

2018 WATER COMPREHENSIVE PLAN

SAMMAMISH PLATEAU
WATER AND SEWER DISTRICT

December 2018

Revised October 2019

Murraysmith, Inc.

David Stangel, P.E.

Michele Cusick
Distribution System Hydraulic Modeling

2018 WATER COMPREHENSIVE PLAN

SAMMAMISH PLATEAU
WATER AND SEWER DISTRICT

December 2018

Revised October 2019

CDM Smith, Inc.

Scott Coffey, LHG
Groundwater Supply

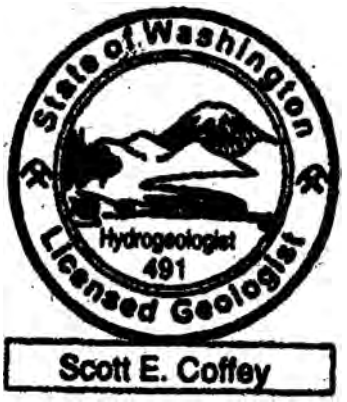

EXECUTIVE SUMMARY

This page intentionally left blank.

Sammamish Plateau Water and Sewer District
Water Comprehensive Plan

Executive Summary

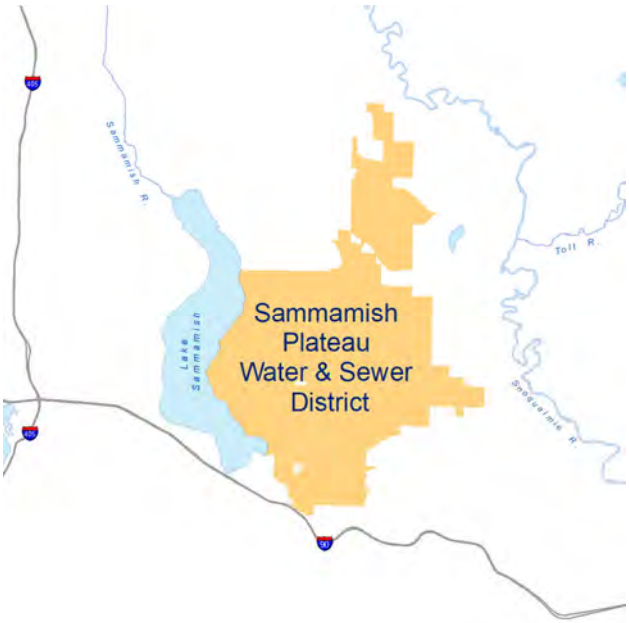

The Sammamish Plateau Water and Sewer District (District) has prepared this Water Comprehensive Plan (Plan) as a road map to guide the District into the future and ensure that it continues to provide high-quality water service to the customers in its water service area. The Plan has been prepared in accordance with the Washington State Department of Health regulations as presented in WAC 246-290-100.

The District, governed by a five-person Board of Commissioners, has been supplying drinking water to its customers on the Sammamish Plateau since 1948. The District's water service area is composed of two distinct areas, designated as the Plateau Zone and the Cascade View Zone. The system includes a total of 12 wells, two connections to the Cascade Water Alliance's regional supply, eight storage tanks, and more than 295 miles of transmission and distribution pipelines, and currently serves more than 60,000 people. The District's service area boundary has evolved as a function of growth and reflects hydraulic and topographical constraints. It is not coincident with political boundaries.

There have been several changes from the federal to the local level regulations since the District's last Water Comprehensive Plan was prepared in 2010 (with an amendment in 2012) that impact the comprehensive planning process. The District has completed several programmatic initiatives in support of actively improving its management, planning, customer service and operations missions. Notable changes and new programs and achievements are highlighted in the following sections and detailed in the following chapters.

Two particularly notable advances include the implementation of Advanced Metering Infrastructure, discussed further under Water Use Efficiency, and development and adoption of an Asset Management Plan, discussed further under Capital Plan.

Policies

In accordance with the guidance provided in the Growth Management Act, this Plan is designed to be consistent with other applicable City and County plans. The District has policies that outline its approach to provision of service within its Retail Service Area, consistent with "duty- to-serve" requirements established by the State. The District's service area boundary is independent of political boundaries.

Since adoption of the last Plan, the District has modified its policies for meter requirements for certain public-institutional developments. In addition policies were changed to allow new Group B systems in areas of the District's future service area where direct District service is not readily available. This would be particularly applicable outside of the Retail Service Area.

The Board also adopted a formal Drinking Water Quality Policy statement addressing drinking water standards and groundwater and aquifer protection.

Demand Forecast

A primary element of developing an effective water system plan is the ability to forecast future demands on the system. The District is not a land use agency, and therefore must plan to meet the water demands that will result from land use and zoning designations established by King County and the Cities of Issaquah and Sammamish. Long-term (20-year and buildout) forecasts were prepared using District data, zoning designations, current development activity, population and housing unit growth projections developed by the PSRC and estimated future water conservation savings.

Recent updates used in this Plan include the 2015 update of the Puget Sound Regional Council (PSRC) long-range population and housing growth forecast for the region, the 2015 update to the City of Sammamish Comprehensive Plan, and the 2017 City of Issaquah update to its Comprehensive Plan. The updated growth forecasts have been prepared following a significant recession and reset the long-range growth forecast.

Average day water demands in the District's service area are projected to reach 5.99 million gallons per day (mgd) by 2027, and 6.1 mgd by 2037. Maximum day demand is forecast to reach 12.7 mgd by 2027 and 13.0 mgd by 2037.

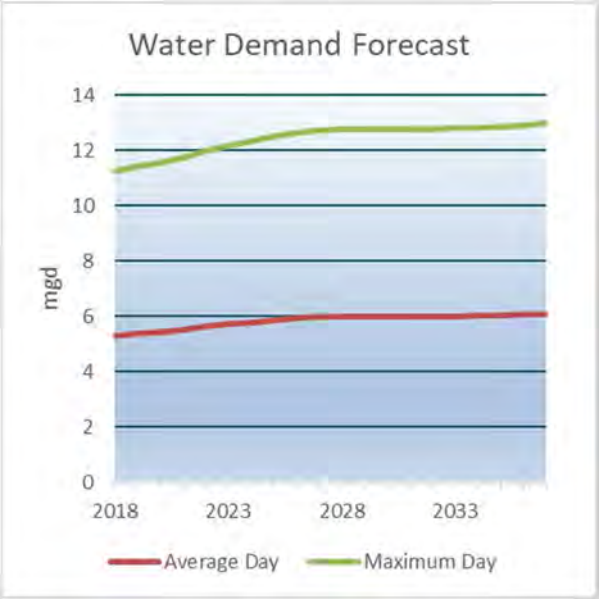

As evident in the growth trend line, PSRC growth forecasts anticipate a period of very slow population and housing growth beginning in about 10 years, with increasing growth rates late in the 20-year planning period. However, since several variables influence growth and water use, the population and water demand forecasts will be periodically reassessed by the District.

Transmission, Distribution, and Storage Analyses

Transmission, distribution, and storage analyses were conducted through the development of an extensive hydraulic model and supporting calculations of capacity versus forecast demand. In 2016 the District completed a project to comprehensively update and calibrate the distribution system hydraulic model. The update included inputs from the District's geographic information system (GIS) asset inventory, updated pump curves, well production data and customer consumption from billing records. Preliminary model results were compared to data collected during field tests conducted in June, July and October 2016. Forty-five locations were used for field data collection. Field testing focused on measurement of static pressure, time and date at a hydrant followed by opening a nearby hydrant for testing under demand conditions. The model was then calibrated to achieve a high level of accuracy for nearly all conditions.

The hydraulic model evaluated current and future water requirements, analyzed present facilities, and anticipated the impact of future demand increases. The analysis indicated that existing source and storage facilities are sufficient to meet needs through the 20-year planning period (i.e. to 2037).

While most of the District's transmission and distribution systems are adequate, projects were identified for some areas, including increases in size or enhancement with looping to meet fire flow requirements and for provision of service to all portions of the District's service area.

In addition to system requirements for normal operations, the District also completed a redundancy analysis to identify the criticality of system facilities, and identified solutions to improve the overall redundancy of the system. Additionally, a Seismic Vulnerability

Assessment Report, completed in 2014, and a follow-up 2017 Seismic Pipeline Study recommended an additional project to enhance the District's system resiliency.

Water Use Efficiency

The District understands how important it is to conserve water and to make the best use of water resources. In 2013 the Cascade Water Alliance (CWA) adopted a Water Use Efficiency (WUE) program for the period 2014-2019 on behalf of its members. This included an aggregated goal for its seven members of a "…cumulative drinking water savings of 0.6 million gallons per day on an annual basis, and 1.0 million gallons per day on a peak season (June-September) basis by 2020." Conservation within the District's system will be achieved by implementation of activities provided by CWA and additional measures administered directly by the District. Presently planned efforts are forecast to reduce District water use forecast for year 2037 by 0.26 mgd or 4.3 percent for the average day and 0.5 mgd or 3.8 percent for the maximum day.

Service meters are an essential component of conservation programs as they provide feedback to customers on their water use, and provide the basis for financial incentives for individual customers. Starting in 2016 the District significantly improved the potential for customers to monitor and manage their water consumption with implementation of an Advanced Metering Infrastructure (AMI) system. The District continues to identify ways to utilize the additional information available for the District and for each customer. The additional detail available, rather than water use readings bimonthly, will support future planning efforts, water use efficiency evaluations and programs, hydraulic modeling, and timelier leak detection for customers.

Water Resources

The District's intends to continue using its existing groundwater wells as the primary source of supply into the future. These sources are supplemented by water obtained from two connections to the CWA regional supply.

The District has a long-term interest to develop aquifer storage and recovery (ASR) as an element of its water supply strategy, The District's efforts to secure permits to implement ASR have stalled due to reluctance by the State Department of Ecology (DOE) to issue the necessary approvals and recovery rights, in context of comments by third-parties and the very complex analysis desired to address all stakeholders' concerns and interests.

Water quality in the aquifer continues to be an area where the District must be vigilant. The District successfully worked with the City of Issaquah to avoid risk of contamination of District groundwater supply in the Issaquah Valley aquifer near the District's Well 9. The District provided funding to allow the City to abandon the Lower Reid Infiltration Gallery in 2014 and manage the stormwater discharge in an area outside a wellhead protection area. More recently, detection of minute amounts of per- and polyfuorinated

substances (PFASs), well below the US EPA Health Advisory Limits, in two wells and uncertainty over changes in level of contamination and further development of the understanding of health impacts and potential regulations has prompted more specific review of use of those wells for supply. To assist in the understanding of this situation, the District updated its Issaquah Valley groundwater model in 2016. The District then developed a monitoring and response plan. Alternatives to address this new constraint include addition of treatment, if necessary, and/or increased reliance on the regional water supply system.

Water Operations Regulatory Requirements

The District's water supply and monitoring programs comply with current drinking water regulations. The District has complied with new regulations since the last Plan, and continually looks to the future to anticipate upcoming regulations and how they might affect the utility and its operations, and most importantly, the quality of water provided to its customers. New and updated District programs include the following.

- The Revised Total Coliform Rule/Distribution System Rule took effect in 2016. The revised rule placed increased emphasis on evaluation of water samples for presence of total coliform, fecal coliform and *E. coli*, and consideration of how to respond following detection of the presence of each. In 2017 the District updated its Coliform Monitoring Plan and developed the associated Triggered Groundwater Monitoring Plan. The Coliform Monitoring Plan includes two tiers of assessment in response to potential unsatisfactory quality results, and an *E. coli* response plan.

- The District collected the required Unregulated Contaminant Monitoring Rule 3 (UCMR3) data from 2013 to 2015. As part of the UCMR 3 monitoring program the District detected PFASs in the supply from District Wells 7 and 8 in 2015. Minute quantities of the contaminants were detected below the survey's minimum reporting level and well below the health advisory level. The City of Issaquah detected these compounds at levels above the health advisory levels in their wells about 1,600 feet away from District wells 7 and 8. The presence of this class of contaminants in the District's water supply has prompted more detailed evaluation and consideration of measures to assure delivery of a safe water supply. Emergence of PFASs as contaminants of concern, including refinement of the health advisory impacts indicates there is potential for associated future water quality regulations.

- In 2017 the fourth Unregulated Contaminants Monitoring Rule (UCMR 4) identified 30 additional chemical and biological contaminant parameters to be included in the District's water quality monitoring program. The District will conduct that monitoring beginning in 2019. There is anticipated continued participation in the UCMR monitoring program including phases anticipated beyond UCMR 4.

- The City of Flint changed its source of water supply and, with insufficient treatment, lead leached from lead water pipes into the local drinking water supply. This exposed

customers to lead contamination. EPA is considering long-term revisions to the federal Lead and Copper Rule, with a final rule anticipated in 2020. The District also anticipates designation of a national primary drinking water regulation for Perchlorate in the near future.

Capital Plan

Starting in 2016, the District established the practice of preparing a biennial Capital Plan, as a programmatic approach for near-term implementation of capital improvement projects, in the context of operational needs, the most recent Water Comprehensive Plan and Wastewater Comprehensive Plan, collaboration opportunities with local governments, development and system extension activity and the Asset Management (AM) Plan.

Also in 2016, through an intensive effort by all District staff and management, with support of the Commissioners, the District developed an AM Plan for its water and sewer system assets. The AM Plan addresses:

- The current state or condition of the District's assets.
- Asset performance needed to deliver our desired level of service.
- Which assets are critical to sustained performance and service delivery.
- The minimum life-cycle costs for the assets relied on to provide service.
- The best long-term funding strategy to operate and renew assets.

The AM Plan identified 45,000 water system assets with a then-current replacement value estimated to be $584 million. Eighty-nine percent of the water system assets were determined to be in "good" to "very good" condition. This is due to the District's historic and ongoing efforts to maintain the system and due to the relatively young age of many of the assets. The findings of the AM Plan support long-range financial planning for maintenance and eventual replacement of assets as they reach the end of their life cycle. Prudent planning for future needs will avoid the need for significant unforeseen increases in rates and connection charges.

The current biennial District Capital Plan was completed for 2018-2019, with consideration of projects through 2023. That plan was a significant resource for identification of projects for the early years of the 10-year capital plan presented in this Plan. The Plan contains the District's Capital Plan (CP) that has been developed to guide the growth of the utility's water system through the year 2037 and beyond. Included in the ten-year CP are:

- Water system share of combined water and sewer system general projects (e.g. office and administration facilities and programs, shared equipment, etc.)
- General water system projects or programs (e.g. completion of AMI project, Smart Water programs, vehicles and equipment, studies, etc.)
- Water supply and treatment improvement projects
- Booster pump station upgrade projects

- Storage safety and coating improvements, and a booster pump station project to utilize more existing capacity
- Transmission main upgrades or extensions
- Fire flow improvements in the transmission and distribution system
- Redundancy piping and pressure reducing valve projects

The CP also includes identification of several projects in progress.

Capital Plan Summary (Ten-Year)

Description	**2018 to 2027**
Water Share of Combined Projects	$3,146,905
General Water System	$2,382,143
Supply	$5,833,000
Booster Pumping	$41,781
Storage	$9,656,386
Mains – Transmission and General	$3,875,175
Mains – Fire Flow Deficiency	$7,027,320
Mains - Redundancy	$13,882,620
Mains – Projects in Progress	$10,962,230
Total	**$56,807,560**

Financial Evaluation

The District is in excellent financial health, and the financial plan presented herein verifies that the District can continue meeting all financial requirements. Revenue adjustments will be necessary to fund capital improvement projects outlined in the CP. Through this planning process the District has determined that the District's Water General Facility Charges (GFCs) are adequate to recover an equitable share of system costs from growth. The financial plan review is based on assumptions that may change over time. The District reviews financial needs as part of an annual budget process, with annual rate analyses that provide the basis for actual revenue adjustments.

This page intentionally left blank.

CHAPTER ONE – DESCRIPTION OF WATER SYSTEM

This page intentionally left blank.

1. Description of Water System

Table of Contents

1.1 Ownership and Management 1-1
1.2 System Background 1-4
1.2.1 History of Water System Development and Growth 1-4
1.2.1.1 Plateau Zone 1-7
1.2.1.2 Cascade View Zone 1-8
1.2.2 Geography 1-9
1.2.3 Neighboring/Adjacent Purveyors 1-9
1.2.4 Federal, State, and Local Regulations 1-14
1.3 Inventory of Existing Facilities 1-14
1.3.1 Plateau Zone 1-15
1.3.1.1 Source of Supply 1-15
1.3.1.2 Treatment 1-15
1.3.1.3 Storage 1-15
1.3.1.4 Transmission and Distribution Network 1-19
1.3.1.5 Pressure Zones 1-19
1.3.1.6 Booster Pump Stations 1-19
1.3.1.7 Pressure-Reducing Stations 1-20
1.3.1.8 Interties 1-20
1.3.1.9 Service Connections 1-20
1.3.2 Cascade View Zone 1-21
1.3.2.1 Source of Supply 1-21
1.3.2.2 Treatment 1-21
1.3.2.3 Storage 1-21
1.3.2.4 Transmission and Distribution Network 1-24
1.3.2.5 Pressure Zones 1-24
1.3.2.6 Booster Pump Stations 1-24
1.3.2.7 Pressure-Reducing Stations 1-25
1.3.2.8 Interties 1-25
1.3.2.9 Service Connections 1-25
1.4 Related Plans 1-25
1.5 Existing Service Area Characteristics 1-29
1.6 Future Service Area 1-31
1.7 Service Area Agreements 1-33
1.7.1 Northeast Sammamish Sewer & Water District 1-33
1.7.2 Issaquah 1-33
1.7.3 Union Hill Water Association 1-34
1.7.4 Dawnbreaker Water Association 1-34
1.7.5 Overdale Water Association 1-34
1.7.6 Ames Lake Water Association 1-34

1.7.7 City of Redmond 1-34
1.8 Service Area Policies 1-34
1.8.1 Wholesaling Water 1-34
1.8.2 Wheeling Water 1-35
1.8.3 Annexation 1-35
1.8.4 Direct Connection and Remote Systems 1-35
1.8.5 Design and Performance Standards 1-38
1.8.6 Surcharge for Outside Customers 1-38
1.8.7 Formation of Utility Local Improvement Districts 1-38
1.8.8 Urban Growth Area 1-38
1.8.9 Reimbursement (Latecomer) Agreements 1-39
1.8.10 Oversizing 1-39
1.8.11 Cross-Connection Control Program 1-39
1.8.12 System Extension 1-39
1.8.13 Drinking Water Quality 1-40
1.9 Satellite Management Agencies 1-41
1.10 Conditions of Service 1-41
1.10.1 District Responsibilities 1-41
1.10.2 Customer Responsibilities 1-43
1.10.3 Connection Fee Schedule 1-43
1.10.3.1 General Facility Charges 1-44
1.10.3.2 Local Facility (Mainline) Charges 1-44
1.10.3.3 Meter Installation/Drop Fees 1-45
1.10.3.4 Regional Capital Facility Charges 1-45
1.10.3.5 Installation Permit Fees 1-45
1.10.4 Meter and Materials Specifications 1-45
1.10.5 Consent Agreements for Inspection, Maintenance, and Repair Activities That May Disrupt Water Service 1-46
1.10.6 Cross-Connection Control Requirements 1-46
1.10.7 Latecomer Payback Provisions 1-46
1.10.8 Developer Extension Requirements, Design Standards, Financing Responsibilities 1-46
1.11 Complaints 1-46

Figures

1-1 Service Area Boundaries 1-2
1-2 2018 District Organization Chart 1-3
1-3 District ERU History 1-5
1-4 Water System History 1-6
1-5 Topography 1-11
1-6 Adjacent Water Purveyors 1-12
1-7 Group B Groundwater Sources 1-13
1-8 Existing Facilities Plateau Zone 1-16
1-9 Plateau Zone Hydraulic Profile 1-17
1-10 Fluoridation and Chlorination Areas 1-18

1-11 Existing Facilities Cascade View Zone……... 1-22
1-12 Cascade View Zone Hydraulic Profile ……1-23
1-13 Zoning…….…..1-30
1-14 Annexation Areas……1-32

This page intentionally left blank.

1. Description of Water System

The Sammamish Plateau Water and Sewer District (District) is located east of Lake Sammamish, approximately 15 miles east of the City of Seattle. The District's service area is depicted on Figure 1-1. This service area includes the majority of the City of Sammamish, a northern portion of the City of Issaquah and both urban and rural areas of unincorporated King County. The District continues to increase in customer-based population and accounts/connections served. Historically, the District relied on supply from groundwater wells with relatively little additional treatment. To meet the demands of growth, the District connected to the regional water system in 2006, a source for surface water supply to supplement the District's independent groundwater supply and implemented additional water treatment. This Water Comprehensive Plan Update describes the strategies that the District plans to implement over the next 20 years to continue to supply high quality water to its customers, meet its present and future supply and infrastructure needs, and continue to comply with complex federal and state water quality regulations.

1.1 Ownership and Management

The District is a Group A water system (System ID No. 409009) that operates as a municipal corporation under Title 57 of the Revised Code of Washington (RCW). The District has the responsibility and authority to plan for water service within its corporate, retail and future water service area boundaries, as shown in Figure 1-1. The 2016 Water Facilities Inventory (WFI) form for the District is included in Appendix A.

The District is governed by a five-member Board of Commissioners (Board), with the members elected to 6-year terms on a rotating schedule by a vote of the people residing within the District's boundaries. The Board establishes District policy, reviews and approves new additions to the water and sewer systems, sets rates for water and sewer services, and approves payment of the District's bills.

The organization of the District is shown in Figure 1-2. The District's General Manager is a member of the District's Administration Department and oversees day-to-day operation of the District's five departments: Administration, Information Services, Customer Service and Finance, Engineering, and Operations. The management and general functions of each department are described below:

- The Administration Department is under direct control of the General Manager and includes support for the Board of Commissioners, overall District planning, and Human Resources.

- The Information Services Department supports all other District departments with Information Technology (IT) and Geographical Information Services (GIS).

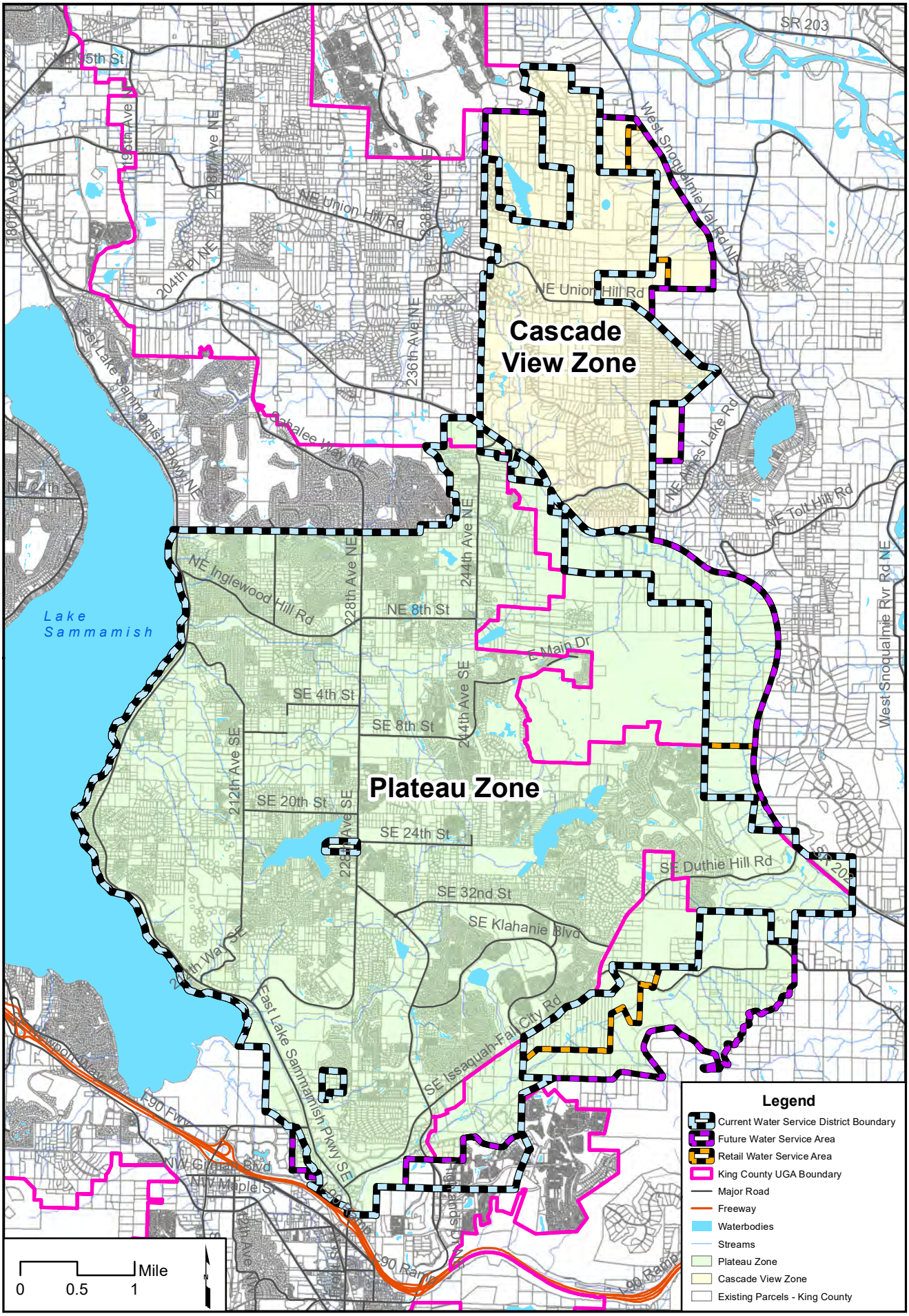

CHS ENGINEERS

Sammamish Plateau Water

Service Area Boundaries

FIGURE 1-1

Water Comprehensive Plan

- The Customer Service and Finance Department is managed by the Finance Manager. This department is responsible for customer water meters, the Cross-Connection program, customer billing, accounts receivable and accounts payable, preparation of the annual operating budget, and responding to customer inquiries and needs.

- The Engineering Department is managed by the Engineering Manager. The department develops and reviews designs for water and sewer system improvements, replacements, and expansions. Department inspectors observe infrastructure construction.

- The Operations Department is supervised by an Operations Manager who oversees three Superintendents. The Water Superintendent oversees the installation, operation, maintenance, and repair of water facilities (water mains, water quality monitoring, wells, storage tanks, and booster pump stations). The Sewer Superintendent oversees the sewer facilities (sewer mains and sewage lift stations). The Building and Grounds Superintendent manages the District buildings, grounds and easements, and SCADA services.

Figure 1-2
2018 District Organization Chart

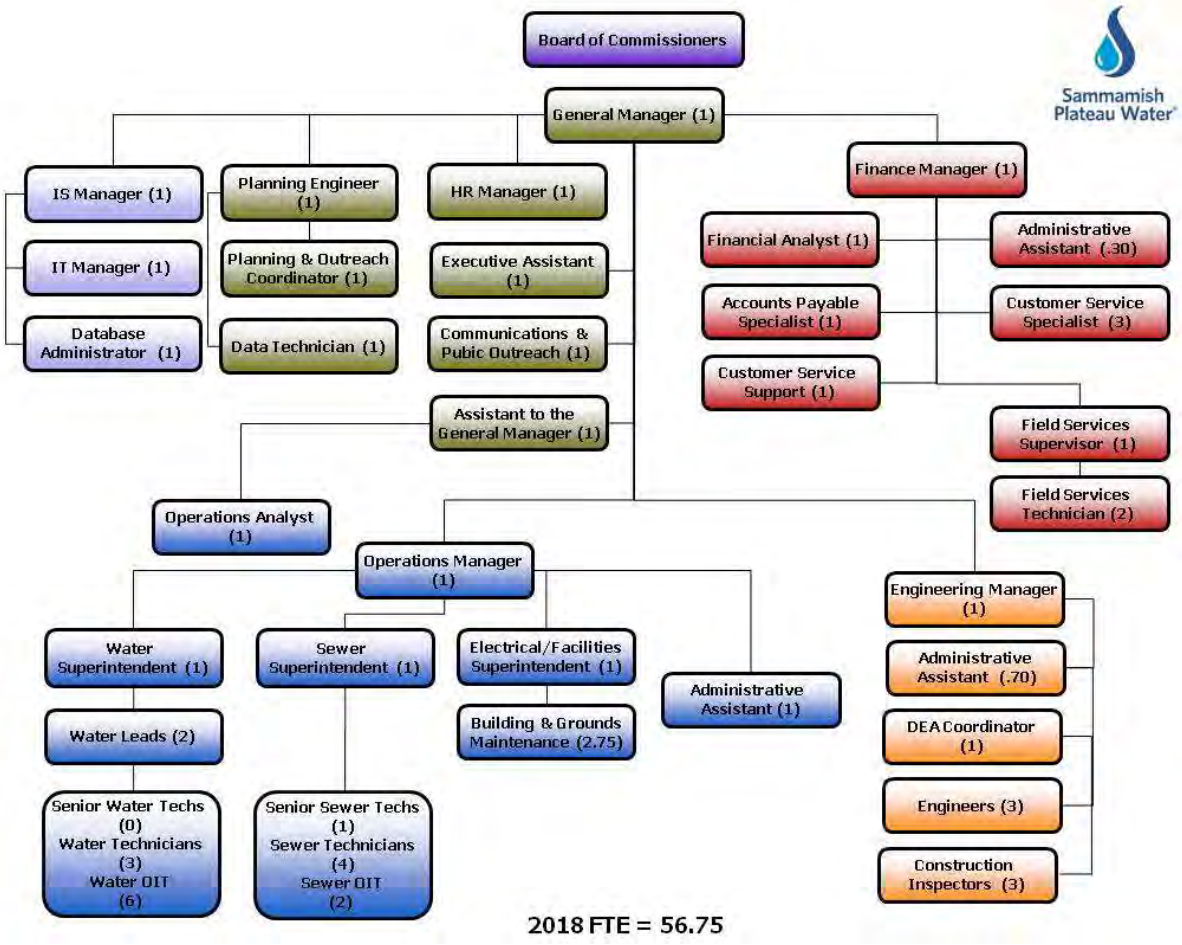

1.2 System Background

1.2.1 History of Water System Development and Growth

The District has been supplying water to its customers on the Sammamish Plateau since 1948. The District's water system is hydraulically divided into two zones: the Plateau Zone, located south of Redmond–Fall City Road; and the Cascade View Zone, located north of Redmond–Fall City Road.

The District began as three separate Districts, two in the Plateau Zone and one in the Cascade View Zone. A brief history of the District's two service zones is presented in the following. A timeline showing when major facilities were added to the District is presented in Figure 1-4.

The District's service area boundary has evolved as a function of growth and reflects hydraulic and topographical constraints. It is not coincident with political boundaries.

Over the last few decades both the Plateau Zone and the Cascade View Zone have experienced the rapid population growth common to East King County. This growth is due to the robust economy and the District's proximity to the center of high-technology industries. Additionally, growth in the Plateau Zone occurs because a majority of the zone is located within the urban growth area established by the 1990 Growth Management Act. Periods of high growth and development started in the 1970s and accelerated through the 1980s and 1990s, as shown in Figure 1-3, with as many as 1,000 new customers connecting to the system in a year. The growth rate declined during the economic downturn, but has since increased again. From 2009 through 2016, the annual increase of connections ranged from 95 to 509, averaging about 260 per year. The growth rate is significantly higher now, with over 470 water connections added in 2017.

Figure 1-3
District ERU History

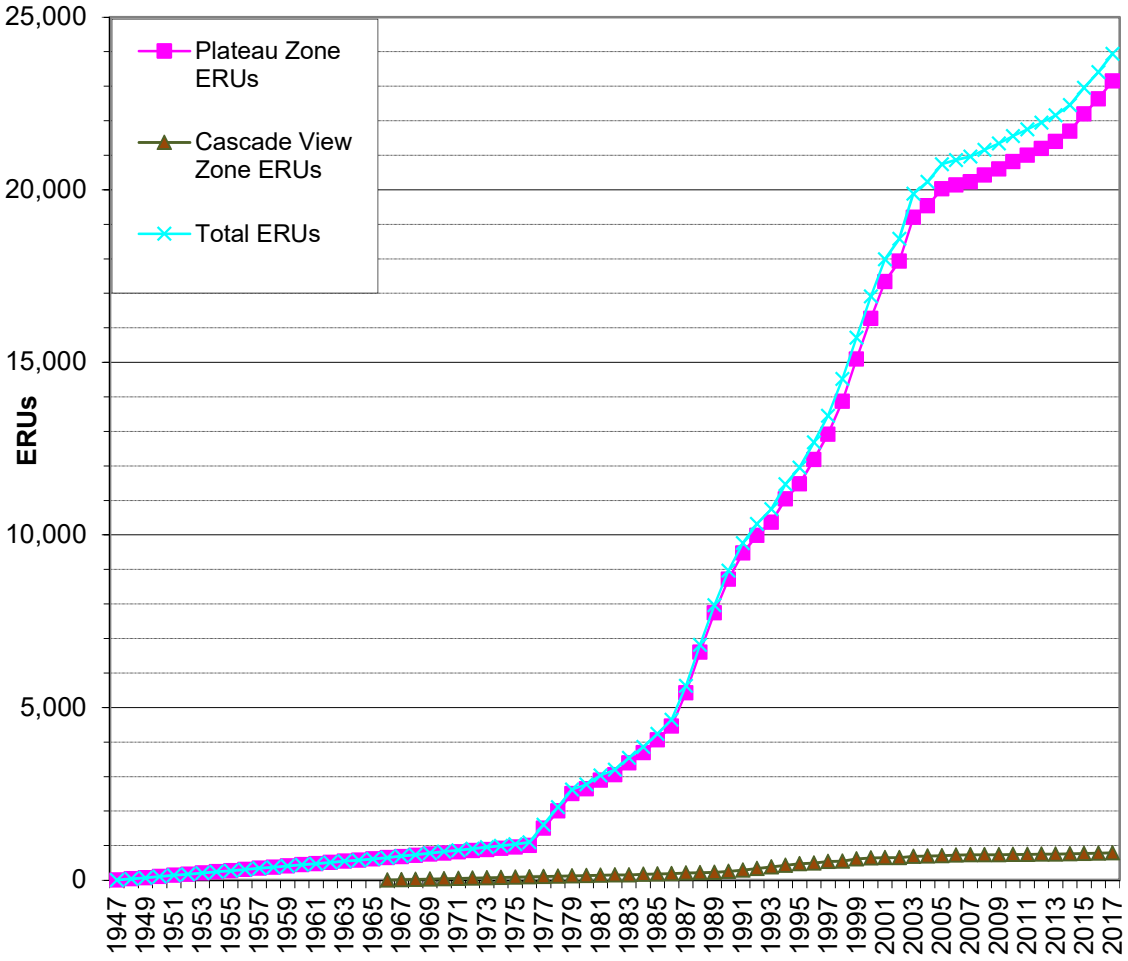

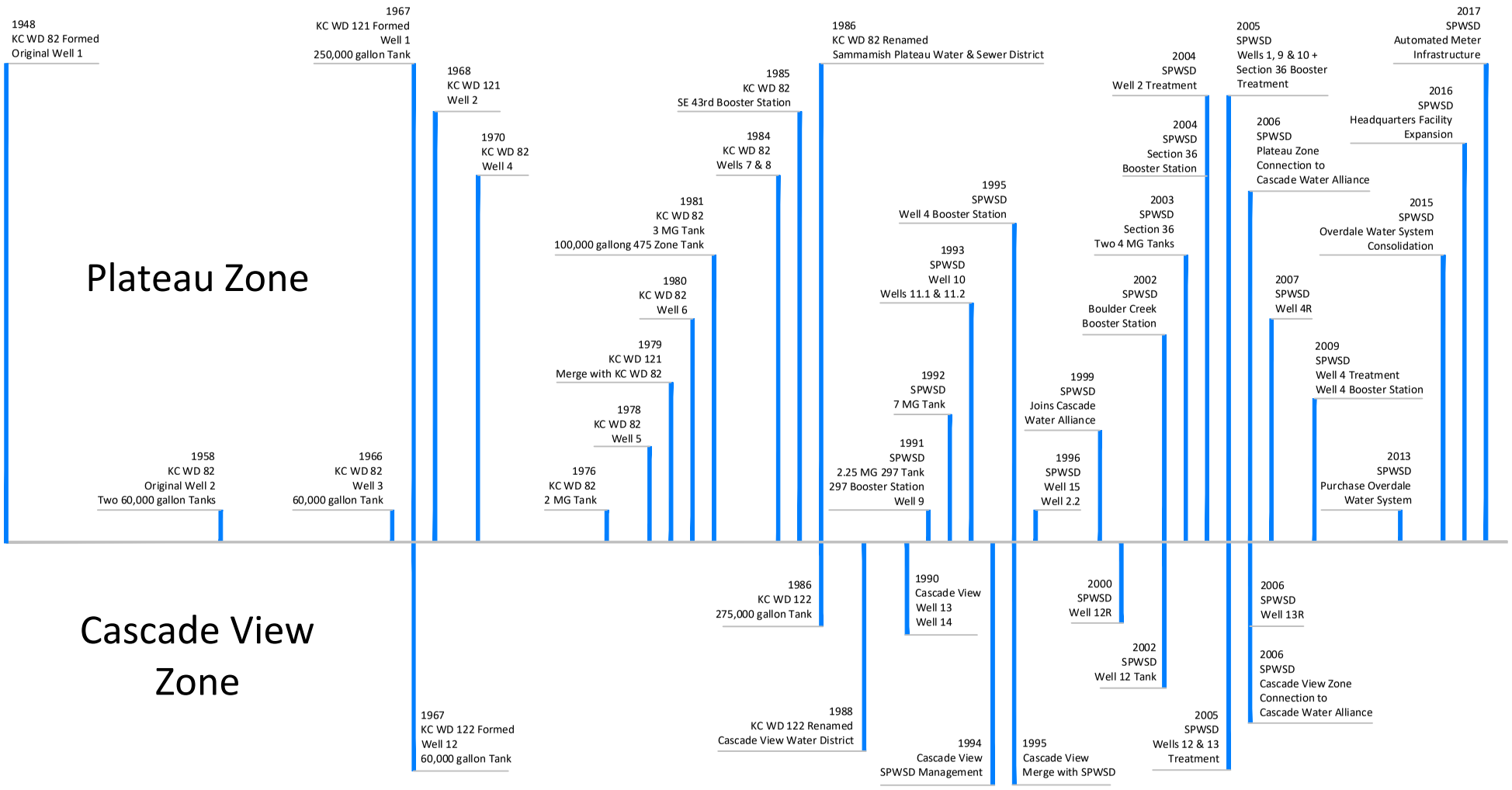

CHS ENGINEERS

WATER SYSTEM HISTORY

FIGURE 1-4

Sammamish Plateau Water / Water Comprehensive Plan

1.2.1.1 Plateau Zone

The Plateau Zone was formed in 1948 as King County Water District (KCWD) No. 82 by approximately 35 residents living at the northwest corner of Pine Lake. Due to the questionable quality of the water from the existing private wells, these individuals needed a better source of water. The Plateau Zone's original facilities included KCWD No. 82's Well 1, a ground-level storage tank, a hydropneumatic pressure system, and approximately 10,000 feet of pipe.

Ten years later, two additional miles of pipe, KCWD No. 82's Well 2, and two 60,000-gallon storage tanks were added. By 1966, three Local Improvement Districts (LIDs) and five Utility Local Improvement Districts (ULIDs) had been formed. In addition, Well 3 and another 60,000-gallon storage tank had been added. Due to high iron levels in Wells 1 and 2, and low yield in Well 3, the District drilled Well 4 in 1970. With a depth of 715 feet and a capacity of 1,000 gallons per minute (gpm), Well 4 became KCWD No. 82's principal source of supply.

Beginning in the early 1970s, significant population growth started in the Plateau Zone. The water system growth occurred through Developer Extensions and the formation of ULIDs. To meet the increasing demand, the District constructed a 2-million-gallon (MG) storage tank in 1976, and in 1978 drilled a second deep well (Well 5) near Well 4.

In 1967 KCWD No. 121, which was located in the Beaver Lake area, had been formed. In 1979 KCWD No. 121 merged into KCWD No. 82. The merger added approximately 500 customers to the then existing 1,900 customers. It also added a 250,000-gallon storage tank and two wells (KCWD No. 121's Wells 1 and 2). In the remainder of the Water Comprehensive Plan, references to Wells 1 and 2 refer to the two wells acquired in the 1979 KCWD No. 121 merger. In 1986, the District was renamed the Sammamish Plateau Water and Sewer District.

Also during the 1980s, there were two factors that affected what had been a routine process for obtaining new water supplies for a growing Plateau Zone. As noted previously, the population was growing at a rate of up to 20 percent. Secondly, the Washington State Department of Ecology's (Ecology) methods and criteria for reviewing and issuing new water rights were modified, resulting in a lengthier process. Beginning in 1989, the District began the first of three moratoriums and limited supply allocations in the Plateau Zone in response to the situation where the continually increasing demand for water was on a course to exceed the Plateau Zone's water supply. A brief history of these limited supply situations is summarized in Table B-1 in Appendix B. The last of the three was released as of January 1, 2005 in response to the District having additional water supply available from the regional water system through the Cascade Water Alliance (Cascade).

The sustained growth in the Plateau Zone from the late 1970s through the 1990s compelled the District to continue to expand its infrastructure. The Plateau Zone currently includes ten wells, six storage tanks with a combined capacity of about 22 MG, six booster pump stations, and a connection to the regional water system. These facilities are

described in greater detail in Section 1.3.

1.2.1.2 Cascade View Zone

The Cascade View Zone was previously a separate water district known as the Cascade View Water District. The Cascade View Water District began operation in 1967 as KCWD No. 122, serving 14 customers with Well 12 (KCWD No. 122's Well 1), 2.5 miles of water mains, and a 60,000-gallon steel storage tank. In 1978, the Cascade View Zone population began to grow rapidly. By 1983, the number of customers had increased to 153, and one mile of water mains had been added. In 1986, the Cascade View Water District built a 275,000-gallon storage tank and decommissioned the original 60,000-gallon storage tank.

In response to the increasing number of customers, the Cascade View Water District sought two additional sources of supply in 1989: (1) a well in the southeast portion of the service area, and (2) purchase of additional water through a pumped intertie with the Union Hill Water Association. However, the well had insufficient capacity and the Union Hill Water Association was able to supply only emergency water to the Cascade View Water District.

The Cascade View Water District continued its effort to provide additional, reliable sources of supply, and in 1990 drilled Well 14 (KCWD No. 122's Well 5) in the Plat of Broadhurst. High levels of iron and manganese and some hydrogen sulfide were present in the water from this well, but the well had a good supply capacity and, thus, was put into operation. Concurrently, Cascade View Water District negotiated an agreement with eight property owners (known as the Consortium) to drill a deep well on District property. This well, Well 13, (KCWD No. 122's Well 4) was drilled in 1990 and placed in operation in 1992.

During this period of well development, the construction of estate-sized developments and the addition of nearly 300 customers led to high summer water demands, exceeding Cascade View Water District's storage and supply capacities. Cascade View Water District subsequently established a rate structure that penalized high water use as part of implementing its successful water conservation program. This conservation program, combined with an emergency supply available from the Union Hill Water Association, carried Cascade View Water District until the new wells were in operation.

In 1994, Cascade View Water District contracted with the Sammamish Plateau Water and Sewer District to provide management and maintenance services for the water system. In May 1995, the Cascade View Water District merged with the Sammamish Plateau Water and Sewer District, resulting in the District's current configuration.

As it has grown, the District has worked to solidify the infrastructure in the rural Cascade View Zone, and use of Well 14 has been discontinued due to water quality aesthetics. The Cascade View Zone currently includes two wells, two storage tanks with a combined capacity of 875,000 gallons, one booster pump station, and a connection to the regional water system. These facilities are described in greater detail in Section 1.3.

1.2.2 Geography

The District's current boundary includes approximately 29.3 square miles. The limits of the District's current corporate limits and retail and future service areas are shown in Figure 1-1. The Plateau Zone portion of the existing corporate limits encompasses 24.8 square miles centered on the Sammamish Plateau, bounded by Lake Sammamish on the west and the Snoqualmie Valley on the east. The Sammamish Plateau has gently rolling hills with crests ranging in elevation from 350 to 620 feet. The southern part of the Plateau Zone slopes down to the Issaquah Valley at an elevation of 30 to 75 feet, where Interstate 90 generally forms the southern boundary of the Plateau Zone. Figure 1-5 shows the topography of the District Service Area. The District's northwest boundary is concurrent with the Northeast Sammamish Sewer and Water District's water service area, which serves the northwest quarter of the Sammamish Plateau. The joint boundary starts at E. Lake Sammamish Pkwy NE and NE 20th Street, and extends east to 236th Avenue NE, where the joint boundary jogs north to NE 22nd and eventually turns north following the 240th Avenue alignment (if extended) to the Redmond–Fall City Road (State Highway 202). The northeastern boundary continues to follow the Redmond–Fall City Road (State Highway 202) around to Duthie Hill Road.

The Cascade View Zone portion of the existing corporate limits is located north of the Plateau Zone and encompasses 4.5 square miles north of the Redmond–Fall City Road (State Highway 202). Much of the Cascade View Zone is located on the eastern portion of Union Hill at an elevation of 600 to 650 feet. It slopes gradually down toward the Snoqualmie Valley on the east side, and more steeply down to elevation 350 to 400 toward Evans Creek on the south. Union Hill Road bisects the area from west to east. The Cascade View Zone extends to NE 100th Street on the north, 244th Avenue NE on the west, Redmond–Fall City Road on the south, and West Snoqualmie Valley Road on the east.

1.2.3 Neighboring/Adjacent Purveyors

The Plateau Zone has three neighboring Group A water purveyors: the City of Issaquah to the south, Northeast Sammamish Sewer and Water District to the northwest and Ames Lake Water Association to the northeast. The Cascade View Zone currently has a common boundary with four Group A water purveyors: Ames Lake Water Association on the east, the Union Hill Water Association on the west, the City of Redmond service area on the northwest, and the Dawnbreaker Water Association, on the north between NE 100th Street and Novelty Hill Road. A map showing the water purveyors adjacent to the District is presented in Figure 1-6.

There is one Group A water system located within the District's service area, known as Plateau Campus LLC Water System, previously known as the Lutheran Bible Institute System. The system is supplied by three groundwater wells. This system previously provided service to the Lutheran Bible Institute property and Sisters of Providence campus. The campus, currently owned by Plateau Campus, LLC, still uses the water system. The campus property is currently proposed for sale, and the existing structures

are scheduled for demolition. Redevelopment of the property would most likely include provision of water service by the District. The location of this system is indicated on Figure 1-7.

There are approximately 60 Group B water systems located within the limits of the District's Future Water Service Area (see Figure 1-7). Table B-2 in Appendix B presents general information for each Group B system. They are generally scattered throughout the service area. Some of the Group B systems may no longer be in service. There are no active discussions with the owner of a Group B system to provide service to the system or its customers. In the event the owners or customers of a Group B water system applies to the District for water service, such potential customers would be subject to the service policies and requirements as described in Sections 1.8 and 1.10. In each case the District could consider the benefits and costs of incorporating any Group B system assets including water rights into the District system.

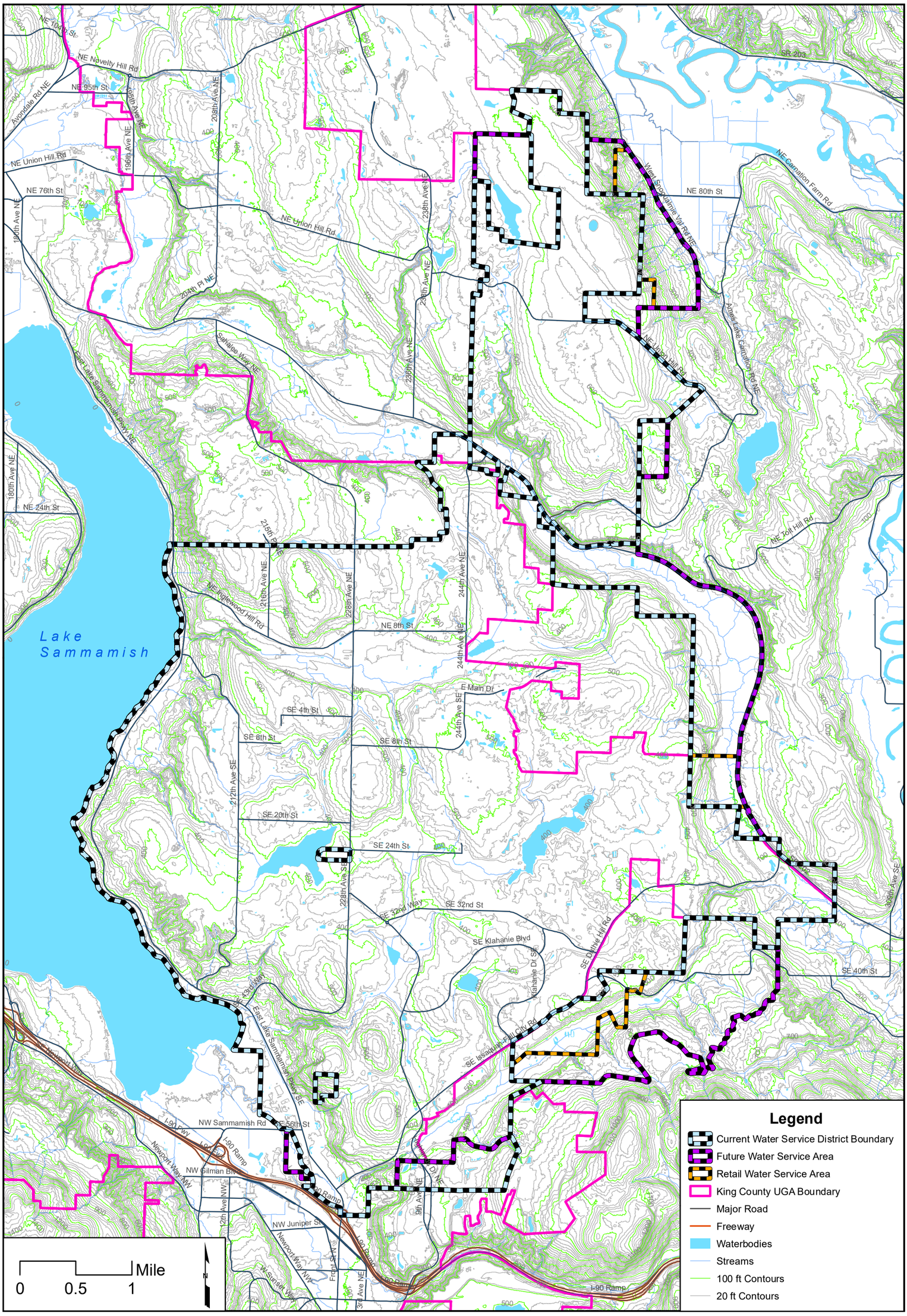

CHS ENGINEERS

Sammamish Plateau Water

Topography

FIGURE 1-5

Water Comprehensive Plan

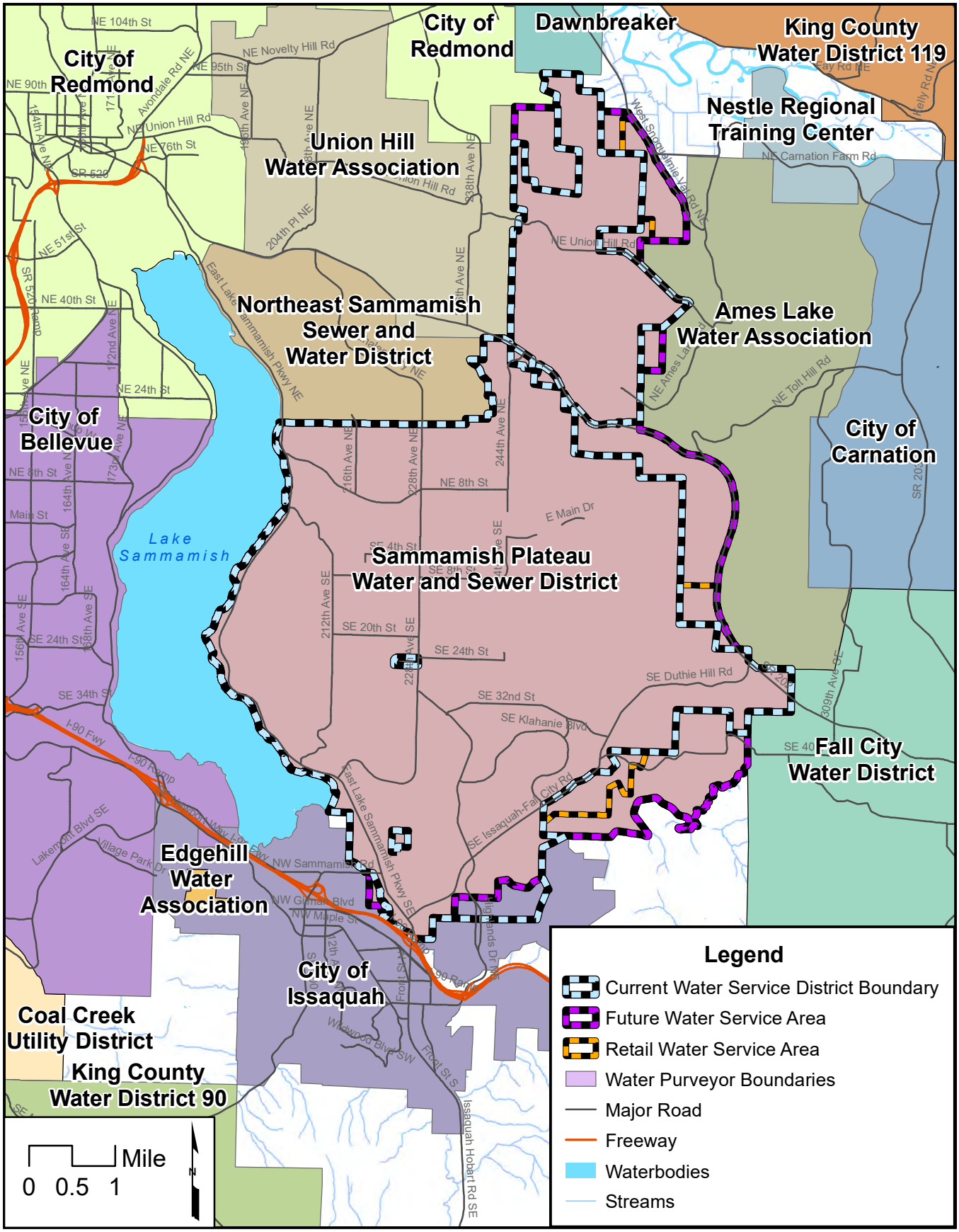

CHS ENGINEERS

Sammamish Plateau Water

Adjacent Water Purveyors

FIGURE 1-6

Water Comprehensive Plan

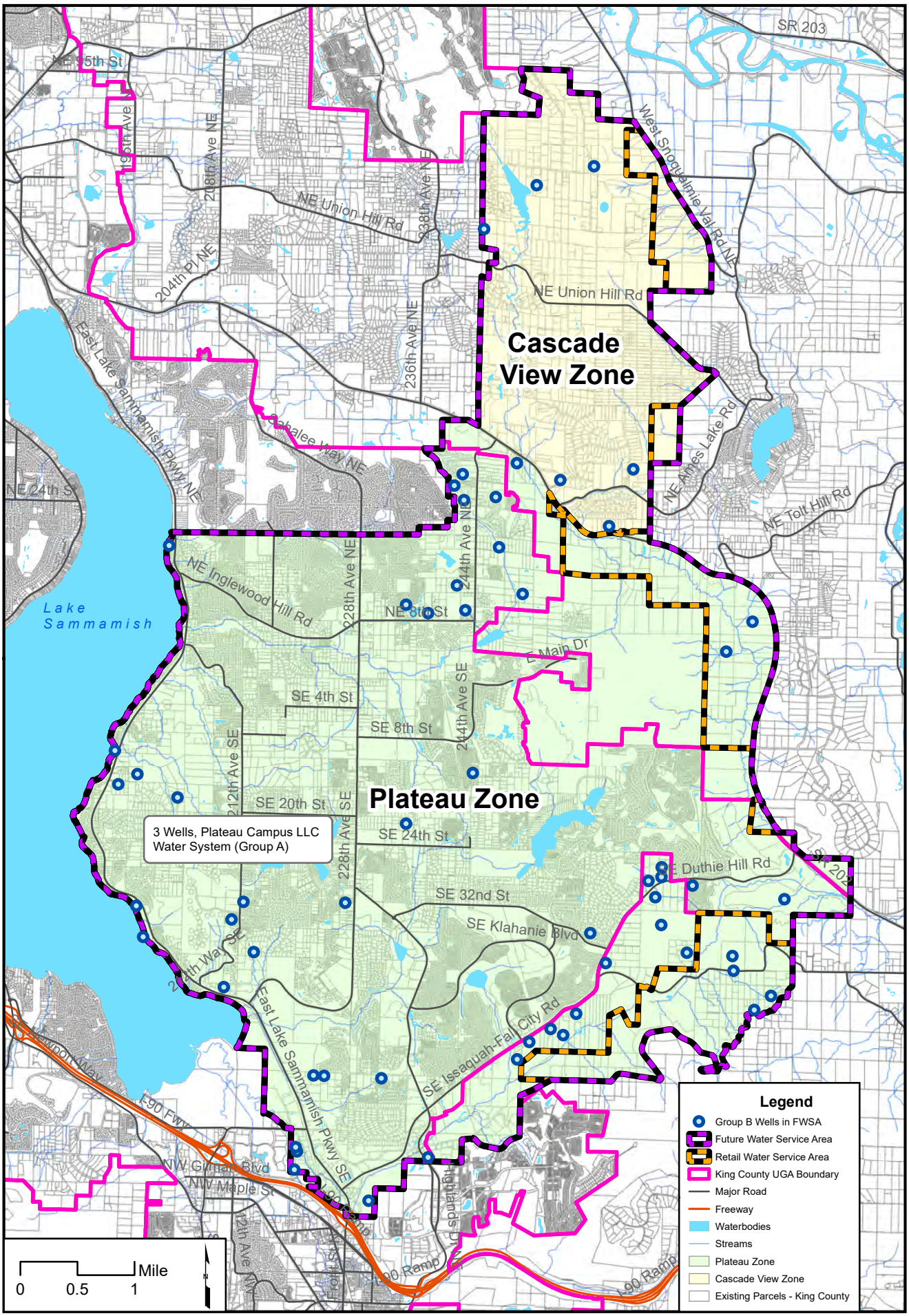

CHS ENGINEERS

Sammamish Plateau Water

Group B Groundwater Sources

FIGURE 1-7

Water Comprehensive Plan

1.2.4 Federal, State, and Local Regulations

Provision of water service by the District must comply with regulations from several different sources, which are listed below.

- Federal
  - Safe Drinking Water Act
  - Endangered Species Act
  - Clean Water Act (Corps of Engineers permits for any work within wetland areas)
- State
  - Title 57 of the Revised Code of Washington
  - Rules and regulations of the State Department of Ecology
  - Rules and regulations of the State Department of Health
  - Coordinated Water System Plan of the East King County Regional Water Association
- King County
  - King County Comprehensive Plan
  - Health Department Guidelines
  - Development/Building Permits
  - Right-of-Way Permits
    - Franchise Negotiation Pending
  - Fire Marshall Requirements
- Cities
  - City of Sammamish Comprehensive Plan
  - City of Issaquah Comprehensive Plan
  - Development/Building Permits
  - Right-of-Way Permits
    - Franchise Negotiation Pending
  - Fire Marshall Requirements
- Fire Districts
  - Fall City Fire Department [King County Fire District (KCFD) 27]
  - Redmond Fire Department (KCFD 34)
  - Eastside Fire and Rescue (including Issaquah Fire Department, Sammamish Fire Department & KCFD 10)
  - Duvall Fire Department (KCFD 45)
- District Board of Commissioners Resolutions

1.3 Inventory of Existing Facilities

The Plateau Zone and Cascade View Zone are hydraulically separate zones, each served by its own wells, storage and regional system connection. Currently, no pipeline connects the two zones, although each zone has interties with certain adjacent purveyors.

The District maintains a Supervisory Control and Data Acquisition (SCADA) telemetry system that uses both DSL and radios to provide detailed information about current system conditions and centralized control over facilities in both zones.

1.3.1 Plateau Zone

1.3.1.1 Source of Supply

The Plateau Zone has 10 operational wells (Wells 1R, 2.1, 2.2, 4R, 7, 8, 9, 10, 11.1, and 11.2) spaced throughout its area. The District also has a connection to the regional surface water source from the Cascade Water Alliance, the South Regional Connection. Wells 7, 8, and 9 and the South Regional Connection are in the Issaquah Valley, Wells 1R, 2.1, 2.2, and 10 are located in the southern portion of the Sammamish Plateau, and Wells 4R, 11.1 and 11.2 are located in the north end of the Sammamish Plateau. All of the wells and the South Regional Connection are shown on Figure 1-8. A hydraulic schematic of key system features is provided in Figure 1-9. Details of the Plateau Zone source of supply facilities are provided in Chapters 5 and 6, and the source capacity analysis is discussed in Chapter 3. Detailed data sheets for each well are included in Appendix C.

1.3.1.2 Treatment

The District chlorinates the water system for disinfection in the Plateau Zone, except for the portion that uses the 3 MG tank for storage. The 3 MG tank area is not chlorinated for disinfection due to a Joint Tank Use Agreement with NESSWD, and includes the 700, 700SH, 540, 590, 550, 475SAMSUN and 440BROD pressure zones. Chlorination is accomplished with sodium hypochlorite generated on-site from salt. Chlorination facilities are located at Wells 1R, 2.1 & 2.2, 4R, 9, and 10 and at the Section 36 Booster Station. Figure 1-10 indicates the areas that receive water chlorinated for disinfection.

The District also fluoridates the Plateau Zone water system, except for the portion that uses the 3 MG tank for storage. Fluoridation of the groundwater supply is accomplished with the addition of sodium fluoride. Fluoridation facilities are located in tandem with the chlorination facilities. Figure 1-10 indicates the areas that receive fluoridated water.

Lead and copper levels in the tap water from the Plateau Zone are addressed using a corrosion control system that adjusts the pH level of the source waters from the Issaquah Valley Aquifer (Wells 7, 8 and 9) and the Shallow Plateau Aquifer (Wells 1R, 2.1, 2.2 and 10) using Sodium Hydroxide. Corrosion control facilities are located at Wells 1R, 2.1 & 2.2, 9 and 10.

Reduction of iron and manganese levels from the Deep Plateau Aquifer source waters (Wells 4R, 11.1 and 11.2) in the Plateau Zone is accomplished with a filtration plant using both chlorine and ferric chloride located at Well 4R.

1.3.1.3 Storage

The topography in the Plateau Zone allows storage tanks to be located at elevations that provide design pressures without excessively high tanks. The District's policy has been

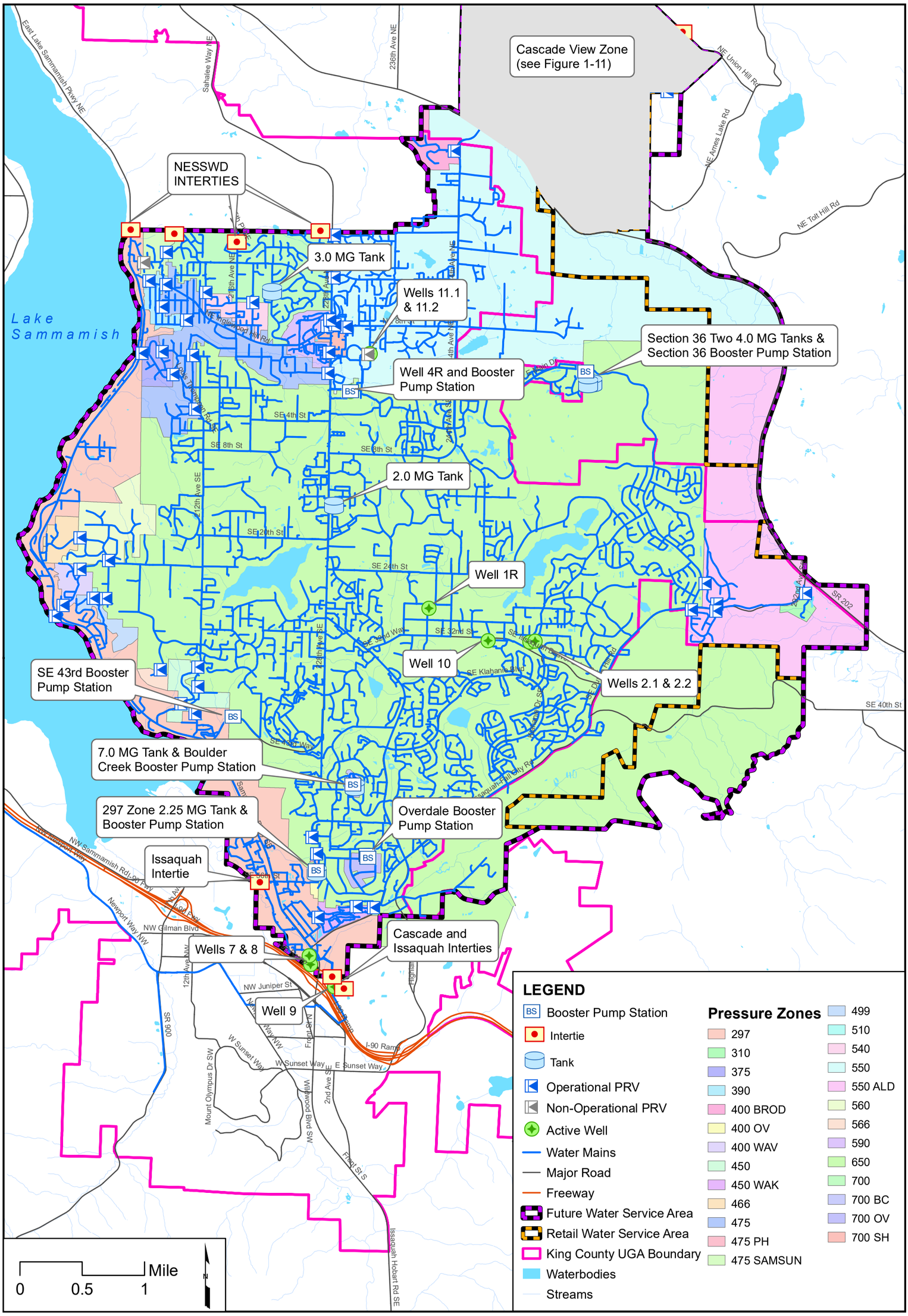

CHS ENGINEERS

Sammamish Plateau Water

Existing Facilities
Plateau Zone
FIGURE 1-8
Water Comprehensive Plan

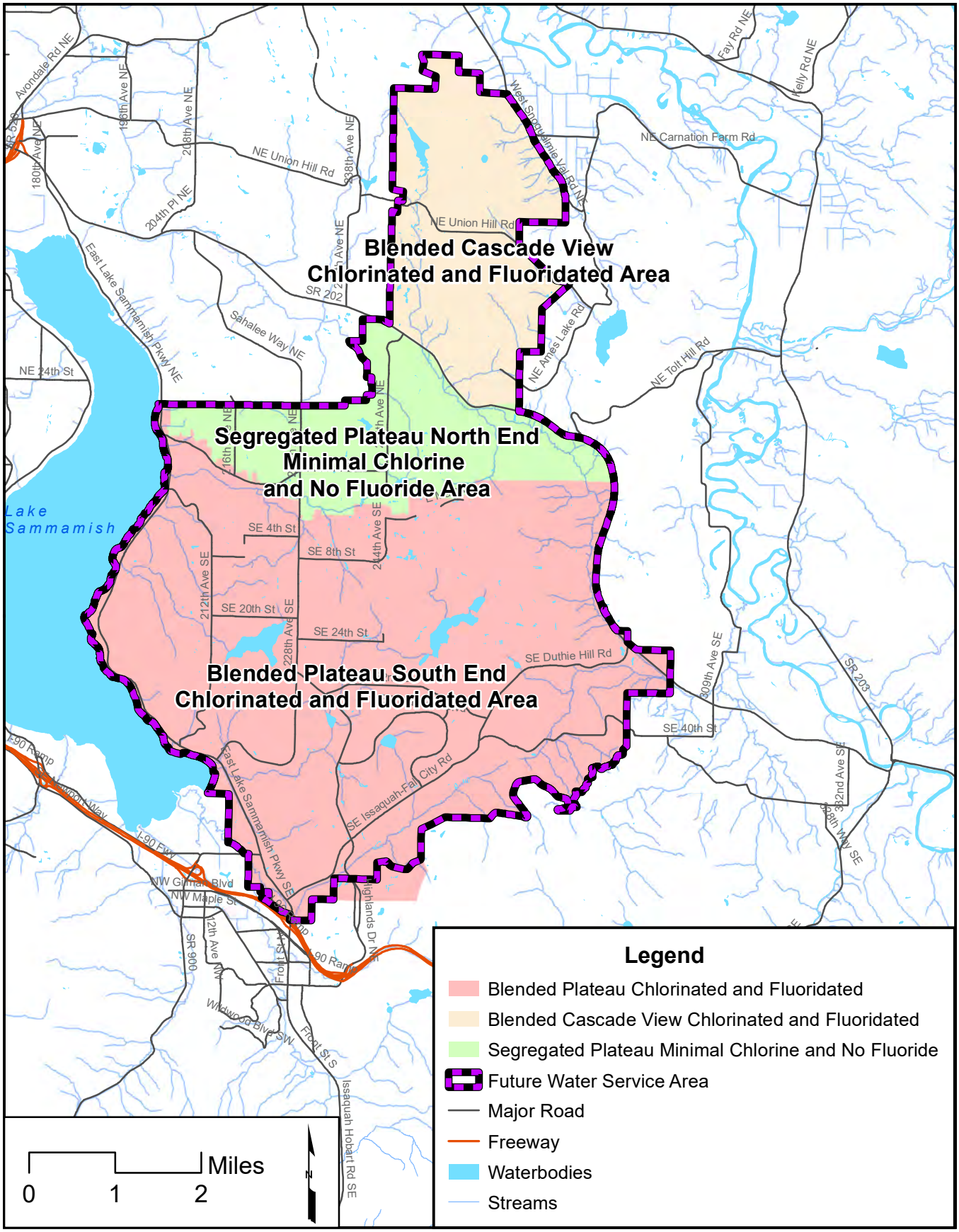

CHS ENGINEERS

Sammamish Plateau Water

Fluoridation and Chlorination Areas

FIGURE 1-10

Water Comprehensive Plan

to provide centrally located storage reservoirs in the higher pressure zones. The lower pressure zones are served through pressure-reducing valves (PRVs). During power failures at wells or booster pump stations, the stored water can supply the lower zones.

Currently the Plateau Zone has six storage tanks. The characteristics of the Plateau Zone's storage facilities are presented in Chapter 6 and their locations are shown in Figure 1-8.

1.3.1.4 Transmission and Distribution Network

The Plateau Zone has more than 272 miles of transmission and distribution pipelines ranging in size from 2 to 30 inches in diameter. The condition of the system is generally good. The overall water transmission and distribution system is shown in Figure 1-8. An inventory of the Plateau Zone's water mains is presented in Chapter 6.

Transmission capacity is provided by 12-inch-diameter and larger pipelines from the supply sources to various points in the water system. In most areas the District has combined the transmission mains with the distribution system by oversizing the mains where appropriate.

The Plateau Zone distribution system consists of less than 12-inch-diameter pipelines that convey water from the transmission grid to the individual service connections. The distribution system meets individual demands in the immediate vicinity by branching and looping pipelines throughout the service area. The District policy at this time is to loop the system where reasonable and practical to provide redundancy in service during maintenance and repair activities, and better water quality overall by avoiding stagnation in dead-ends.

1.3.1.5 Pressure Zones

The wide variation in the Plateau Zone's topography has resulted in five major pressure zones within the Plateau Zone: 297, 475, 550, 650, and 700. Several other minor pressure zones serve customers on the steep hillsides coming down from the top of the Sammamish Plateau. The pressures are designed to meet Washington State Department of Health (DOH) and District standards under all operating conditions. The pressure zones adjacent to Issaquah (297 Pressure Zone) and to the Northeast Sammamish Sewer and Water District (700, 550, and 297 Pressure Zones) are compatible with the pressure zones for those utilities. The locations of the pressure zones are shown in Figures 1-8 and 1-9. Additionally, the 550 Pressure Zone at the north end of the Plateau Zone matches the adjacent pressure zone in the District's Cascade View Zone. Water is transferred between pressure zones with booster pump stations to move to higher zones and by pressure-reducing stations to lower zones.

1.3.1.6 Booster Pump Stations

Water is transferred from lower to higher pressure zones by six booster pump stations: SE 43rd, 297, Well 4R, Section 36, Boulder Creek, and Overdale Pump Stations. The

Boulder Creek and Overdale Booster Pump Stations are used to supply two small isolated sections of the 700 Pressure Zone (the 700 BC and 700 OV Zones). The booster pump stations supply the area with domestic service at pressures that provide a level of service higher than is required for a minimum level of service. Fire protection for these areas is provided from the non-boosted system fed directly by the 650 Pressure Zone storage tanks. During a power outage the 700 BC Zone is provided with service with pressures limited to those provided by the storage tanks serving the adjacent area. An on-site generator at the Overdale Booster Pump Station maintains service to the station during power outages. Detailed information about each of these booster pump stations is presented in Chapter 6; their locations are shown in Figure 1-8.

1.3.1.7 Pressure-Reducing Stations

The transfer of water from higher to lower pressure zones is accomplished with pressure-reducing stations. Pressure Reducing Valves (PRVs) in the pressure-reducing stations vary the flow rate through the valve to maintain a constant, preset discharge pressure. The hydraulic effect of a PRV on a lower pressure zone is approximately the same as a storage tank whose overflow elevation equals the pressure setting on the valve. PRVs allow the water stored in the higher pressure zones to be used in the lower zones, maintaining pressures in areas where storage tanks and/or independent supply sources are infeasible or undesirable.

The majority of the supply and storage facilities are located in the higher pressure zones, and many of the lower pressure zones are dependent on the flow of water through the pressure- reducing stations. The Plateau Zone currently has 41 operational and two inactive pressure-reducing stations, as shown in Figure 1-9. The location and characteristics of each pressure- reducing station are described in Chapter 6.

1.3.1.8 Interties

The Plateau Zone has two interties with Issaquah and four interties with NESSWD. The location of these interties is shown in Figure 1-8.

Two of the four interties with NESSWD are free-flowing interties, although NESSWD has chosen to restrict usage of one of the free-flowing interties. The District and NESSWD share the 3-MG storage tank. The interties allow water for the NESSWD to flow to and from the tank, which is located within the District's 700 Pressure Zone.

All other interties are intended for emergency use. Detailed information on the interties is provided in Chapter 6.

1.3.1.9 Service Connections

As of January 1, 2017, the Plateau Zone provided water service to approximately 17,500 service connections with meters ranging in size from 3/4 inch to 4 inches. These connections represent more than 22,600 ERUs, as described in Chapter 2. Water has also been allocated for approximately 1,740 additional ERUs, primarily through

Certificates of Water Availability and associated Developer Extension Agreements. The initial 2017 values are used in the system analyses. [As of the end of 2017, the Plateau Zone provided water service to approximately 17,950 connections representing more than 23,150 ERUs.]

1.3.2 Cascade View Zone

1.3.2.1 Source of Supply

The Cascade View Zone is served by two wells (Wells 12R and 13R) and a connection to the regional surface water source from the Cascade Water Alliance, the North Regional Connection. The North Regional Connection is actually an intertie with the City of Redmond system in Redmond Ridge, through which water is wheeled from the regional supply. The locations of the wells and the North Regional Connection are shown in Figure 1-11. A hydraulic schematic of key system features is provided in Figure 1-12. The Cascade View Zone source of supply facilities are provided in Chapters 5 and 6 and the source capacity analysis is discussed in Chapter 3. Detailed data sheets for each well are included in Appendix C.

1.3.2.2 Treatment

The District chlorinates the water system for disinfection in the Cascade View Zone. Chlorination is accomplished with sodium hypochlorite generated on-site from salt at both Wells 12R and Well 13R.

The District also fluoridates the Cascade View Zone water system. Fluoridation of the groundwater supply is accomplished with the addition of sodium fluoride. Fluoridation facilities are in tandem with the chlorination facilities.

Iron and manganese levels are addressed with filtration plants using both chlorine and ferric chloride at both Wells 12R and 13R.

1.3.2.3 Storage

The topography in the Cascade View Zone allows storage tanks to provide good water pressure to most of the area without excessively high tanks. The Cascade View Zone currently has two active storage tanks in the highest pressure zone. A third, older, 60,000-gallon storage tank is currently operated as part of the treatment system, but can provide some additional pumped storage. The lower pressure zones are served through PRVs. The characteristics of the Cascade View Zone's storage facilities are presented in Chapter 6, and their locations are shown in Figure 1-11.

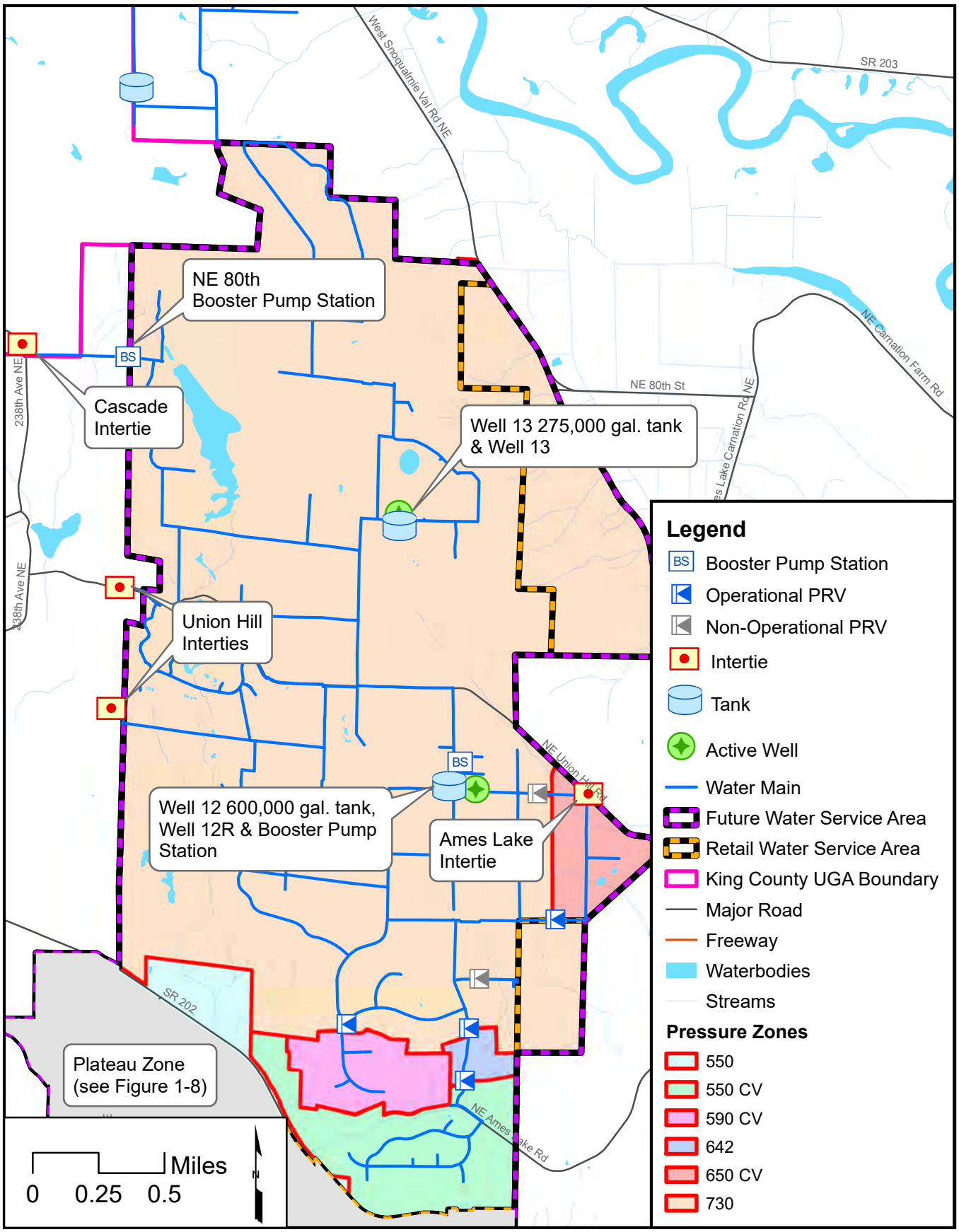

CHS ENGINEERS

Sammamish Plateau Water

Existing Facilities
Cascade View Zone

FIGURE 1-11

Water Comprehensive Plan

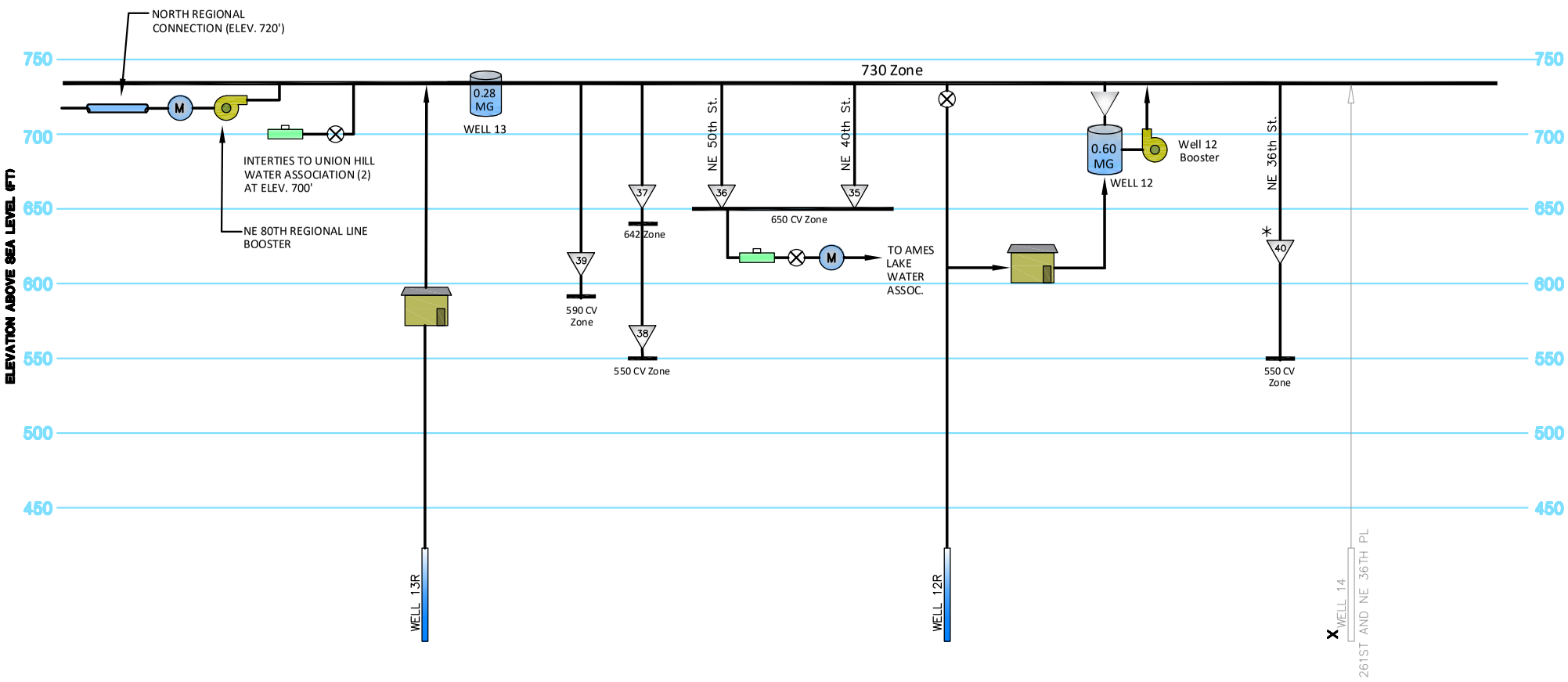

LEGEND

Size MG	RESERVOIR		BOOSTER PUMP STATION		CLOSED VALVE(S)	ID	WELL
	INTERTIE METER	ID	PRV	M	METER		
	WATER TREATMENT FACILITY		NORMALLY CLOSED PRV	*	NOT CURRENTLY IN OPERATION (INACTIVE)	X	ABANDONED

CHS ENGINEERS

HYDRAULIC PROFILE
CASCADE VIEW ZONE
FIGURE 1-12

Sammamish Plateau Water / Water Comprehensive Plan

1.3.2.4 Transmission and Distribution Network

The Cascade View Zone has approximately 24 miles of transmission and distribution pipelines ranging in size from 2 to 12 inches in diameter. The condition of the system is generally good. The overall water transmission and distribution system is shown in Figure 1-11. An inventory of the Cascade View Zone's water mains is presented in Chapter 6.

Within the Cascade View Zone, there is essentially no distinction between the transmission and distribution piping. The largest pipelines within the Cascade View Zone are 8-inch and 12-inch diameter pipelines. The older sections of the Cascade View Zone distribution system consist of mains less than 8 inches in diameter, while newer sections are generally 8-inch and 12-inch diameter pipelines. Looping exists within the system, providing many areas with at least two pipelines to deliver water.

1.3.2.5 Pressure Zones

The Cascade View Zone is divided into three primary pressure zones: 730, 650 CV, and 550 CV and two minor pressure zones, 590 CV and 642. Most of the area is served by the 730 Pressure Zone. The lower pressure zones are located in the eastern and southern portions of the Cascade View Zone, where the topography slopes down toward the Snoqualmie River and Evans Creek. The pressure zones are designed to meet DOH and District standards.

The Cascade View 550 CV Pressure Zone, at the south end of the Cascade View Zone, matches the adjacent pressure zone in the District's Plateau Zone.

The hydraulic grade for the adjacent Redmond Ridge system with the North Regional Connection is 730 feet, the same as the highest Cascade View Pressure Zone, but the hydraulic grade line has decreased to less than 730 feet where the connection to the District is located, so a booster pump system is required to bring the water in at the same hydraulic grade provided by the storage tanks. The portion of the Union Hill Water Association adjacent to the Cascade View 730 Pressure Zone is a 700 Pressure Zone, which would also require a booster pump to provide water to the Cascade View Zone at the pressures provided by the storage tank.

The Ames Lake Water Association, located to the east, is adjacent to two zones. In the Union Hill Road area, the District's pressure zone is 650 feet and Ames Lake Water Association's is lower and would utilize a pressure reducing station. In the Ames Lake Road area, the District's pressure zone is 550 feet and Ames Lake Water Association's is higher, and would require a booster pump station.

The District pressure zones are shown in Figure 1-11.

1.3.2.6 Booster Pump Stations

Currently there are two booster pump stations in the Cascade View Zone. One booster pump station is installed as part of the system to deliver water from the Well 12 treatment

plant to the system. The other booster pump is used to bring water into the 730 Pressure Zone from the North Regional Connection. The location and characteristics of each booster pump station are described in Chapter 6.

1.3.2.7 Pressure-Reducing Stations

The transfer of water from the 730 Pressure Zone to the 650 CV, 642, 590 CV and 550 CV Pressure Zones is accomplished with pressure-reducing stations. In the Cascade View Zone, all of the storage is in the 730 Pressure Zone. The lower pressure zones are dependent on the flow of water through the pressure-reducing stations. The Cascade View Zone currently has 5 pressure-reducing stations, as shown in Figure 1-11. The location and characteristics of each pressure-reducing station are described in Chapter 6.

1.3.2.8 Interties

The Cascade View Zone has one intertie with Ames Lake Water Association and two interties with the Union Hill Water Association, as shown in Figure 1-11. The Union Hill interties are not operational without a booster pump connection. The Ames Lake Intertie is only operated to provide water to the Ames Lake system. The Cascade View Zone interties are currently in place for emergency use only. Detailed information on the existing interties is provided in Chapter 6.

In addition, the District has an intertie with the City of Redmond, as noted in Section 1.3.2.1, through which water is wheeled from the regional supply.

1.3.2.9 Service Connections

As of January 1, 2017, the Cascade View Zone served approximately 705 service connections, with meters ranging in size from 3/4-inch to 2-inch. These connections represent nearly 784 ERUs, as described in Chapter 2. Water has been allocated for an additional 18 ERUs through Certificates of Water Availability. The initial 2017 values are used in the system analyses. [As of the end of 2017, the Cascade View Zone provided water service to approximately 708 connections representing more than 788 ERUs.]

1.4 Related Plans

This section includes a list of plans and documents related to the Sammamish Plateau Water and Sewer District's Water Comprehensive Plan. The following plans are described in greater detail below.

- King County Comprehensive Plan (2016)
- City of Sammamish Comprehensive Plan (2015)
- City of Issaquah Comprehensive Plan (2017)
- City of Issaquah Water System Plan Update (2013)
- Northeast Sammamish Sewer & Water District Water Comprehensive Plan (2010)

- Union Hill Water Association Water Comprehensive Plan (2015)
- Ames Lake Water Association Water Comprehensive Plan (2008, Amended 2010)
- Fall City Water District Water Comprehensive Plan (2016)
- Cascade Water Alliance Transmission and Supply Plan (2012)
- East King County Coordinated Water System Plan (October 1989) and Update (November 1996)
- Lower Issaquah Valley Wellhead Protection Plan (1993-1995)
- Hydrogeologic Assessment and Update to Lower Issaquah Valley Aquifer Production Wells 7, 8 and 9 Wellhead Protection Areas (2017)
- Wellhead Protection Program for Plateau and Cascade View Wells (June 1998).

King County Comprehensive Plan (2016). This plan manages the projected growth within unincorporated King County by designating where growth will occur through policies, goals, plans, and regulations. The County Comprehensive Plan includes a land use map of unincorporated King County that identifies land use types and densities that will accommodate the projected growth. An urban growth boundary is also defined in the Comprehensive Plan to direct most of the projected growth into more urban areas. Public utilities, such as the District, are required to support the projected growth as identified by the County Comprehensive Plan.

City of Sammamish Comprehensive Plan (2015). The City of Sammamish incorporated in 1999. The Comprehensive Plan includes a land use map that identifies land use types and densities. The City's Comprehensive Plan projects and manages the growth within the incorporated City limits by developing a land use plan, policies, goals, and regulations. The City's Comprehensive Plan is supported and implemented by other City documents, including the Sammamish Storm and Surface Water Management Comprehensive Plan, Town Center Sub-Area Plan and Capital Improvement Plans. Sammamish's Comprehensive Plan does include four Potential Annexation Areas (PAAs). Three of the PAAs, Aldarra Unplatted (aka Aldarra Golf Club), Soaring Eagle Park (aka 30-Acres Park), and 244th South (aka Swan Ridge Neighborhood) are in the District's service area. The fourth PAA, Outlook (aka Evans Creek Preserve Trail) is adjacent to Sahalee Way NE, and north of the District's service area. The City of Sammamish was in a temporary development moratorium, initiated in October 2017 and repealed in December 2018. Public utilities, such as the District, are required to support the projected growth as identified by the City's Comprehensive Plan.

***City of Issaquah Comprehensive Plan (2017)*.** The City of Issaquah's Comprehensive Plan includes policies for land use, including setting land use zoning, and also has policies for utilities and public services such as water and sewer service. All of the Providence Point and most of the North Issaquah sub-areas are within the Sammamish Plateau Water and Sewer District Retail Water Service Area. In addition, the City annexed the Lake Sammamish State Park and Highlands Drive Area, both of which include District service areas. The Highlands Drive Area was annexed to the City of Issaquah in 2008. Only a portion of the Lake Sammamish State Park is in the District's service area. Issaquah's plan does indicate one PAA: East Cougar Mountain. This PAA is south of the District's Future Water Service Area. The City of Issaquah currently had a partial development moratorium in the City of Issaquah Central Issaquah, initiated in 2016, but

was lifted in 2018. Public utilities, such as the District, are required to support the projected growth as identified by the City's Comprehensive Plan, for the portion of the District within the City boundaries.

***City of Issaquah Water System Plan Update (2018 Update)*.** The 2018 plan update, adopted March 18, 2019, includes planning horizons for both 10 years, through 2027, and 20 years, through 2037. The plan presents an existing Retail Water Service Area generally abutting the southern limit of the District Retail Water Service Area. The City Plan reflects the District service area extending further south than the District is planning for in Lake Sammamish State Park and southeast of the former Overdale Water District. The update also presents a planned future retail water service area including area within the District and within the current City limits, and potential City annexation areas, and all of Lake Sammamish State Park. The plan describes the 2012 Cascade Water Alliance interlocal agreement and reliance on Cascade and groundwater to meet its forecast water demand. The plan notes the two emergency interties between the District and Issaquah, including one that previously operated automatically to provide additional fire flow to Issaquah's Valley Operating Area from emergency storage leased in the District's 297 Reservoir. The agreement was modified to terminate the reservoir storage lease and associated automatic intertie operation effective March 19, 2013. The plan references prior coordination with the District regarding a potential third intertie on Black Nugget Road for emergency purposes.

Northeast Sammamish Sewer & Water District Water Comprehensive Plan (2010). This plan sets out the water service plan for the Northeast Sammamish Sewer & Water District (NESSWD). NESSWD has five groundwater wells and interties with the District for their water supply. The District and NESSWD share the existing 3-MG reservoir. The District and NESSWD each have ownership of 1.5-MG of storage in the shared tank. NESSWD also uses a 0.5-MG reservoir for its additional storage needs. An additional storage facility was proposed adding 0.63 MG of storage to the system. Four interties with the District, two active and two for emergency conditions, are identified in the plan. The NESSWD supply and system is not chlorinated. The 2010 Plan was approved by DOH for a six-year period. In 2017 NESSWD requested and received a two-year extension from DOH.

***Union Hill Water Association Water Comprehensive Plan (2015)*.** The Union Hill Water Association (UHWA) is supplied by its own wells and has several interties with adjacent systems for emergency situations. UHWA has four storage reservoirs. The plan does note two existing emergency interties with the District's Cascade View Zone. These intertie connections are unmetered. The manually operated closed valve interties are located on Union Hill Road and on NE 58th Place, both in the vicinity of 244th Avenue (if extended). The plan indicates that the District provides back-up on-call personnel to UHWA as needed for response to significant emergency events. (The agreement for such service was discontinued at the beginning of 2017.)

Ames Lake Water Association Water Comprehensive Plan (2008, Amended 2010). The Ames Lake Water Association (ALWA) is supplied by its own wells and the system includes seven reservoirs. This plan presented recommendations for the Association to

meet their projected demands, including the need to develop new water sources. In accordance with these plans an intertie with the District's Cascade View Zone was installed. This is intended only for emergency use and is manually operated. The plan referenced the ultimate purpose of that intertie to provide water from the Seattle Regional system, wheeled through the District. However, the ALWA capital improvement program only addresses the intertie for emergency service. This plan is being updated, with anticipated completion in early 2018.

Fall City Water District Water Comprehensive Plan (2016). The Fall City Water District's future water service boundary is adjacent to the District's southeastern corporate and future water service area boundaries. The Fall City plan indicates that area abutting the District has been relinquished from their water service area. The two systems are widely separated, and the Fall City plan does not foresee service interaction between the two Districts.

Cascade Water Alliance Transmission and Supply Plan (2012). The Cascade Water Alliance Transmission and Supply Plan (TSP) was adopted by the Cascade Board in July 2012. The TSP describes a water supply strategy for its eight members, including the District, and covers a long-range planning period ending in 2060.

East King County Coordinated Water System Plan (*October 1989*) and Update (November 1996). The *East King County Coordinated Water System Plan* (EKCCWSP) reported the mutually agreed upon future service areas for the water purveyors in the East King County Water Utility Coordinating Committee ("WUCC"). Since the last update the District has made changes to the District's Corporate boundary with Union Hill Water Association and to the District's Future Water Service boundary with Ames Lake Water Association. Notice of both of these mutually agreed boundary changes have been transmitted to the WUCC for inclusion in the next EKCCWSP update. The EKCCWSP also assessed the water supply needs in eastern King County and developed a list of options to meet those needs. The plan was developed under the guidance of the Water Utility Coordinating Committee, with a goal of the plan was to assist area utilities in establishing an effective process for planning and developing public water systems.

Lower Issaquah Valley Wellhead Protection Plan (1993-1995). This plan assessed the hydrogeologic conditions of the Lower Issaquah Valley aquifer. Wellhead protection areas were delineated based on a conceptual model of the aquifer and hydrogeologic mapping. An inventory of contaminant sources was prepared and a risk screening was completed. A number of wellhead protection strategies were proposed to manage land use and prevent groundwater contamination.

Hydrogeologic Assessment and Update to Lower Issaquah Valley Aquifer Production Wells 7, 8 and 9 Wellhead Protection Areas (2017). This report was developed as part of the District's response to the discovery of Perfluorinated Compounds (PFCs) in the Lower Issaquah Valley Aquifer. The report describes the update to the groundwater flow model in the Issaquah Valley, and the updated hydrogeologic mapping of the District's wellhead protection areas for Wells 7, 8 and 9.

Wellhead Protection Program for Plateau and Cascade View Wells (June 1998). This plan presented a hydrogeologic model of the Plateau Zone and Cascade View Zone areas describing the location and characteristics of the aquifers. The model was used to delineate wellhead protection areas around each District well. Potential contaminant sources within the wellhead protection areas were inventoried and the risks to the water supply were assessed.

1.5 Existing Service Area Characteristics

The District's existing corporate boundary is shown in Figure 1-1 (i.e. Current Water Service District Boundary). The District has committed to provide water service in the Retail Water Service Area as indicated in Figure 1-1. The major facilities are described in Section 1.3. Topography for the entire District is shown in Figure 1-5 and pressure zones are shown for the Plateau Zone and Cascade View Zone in Figures 1-8 and 1-11, respectively.

Figure 1-13 shows the current zoning within the existing Plateau Zone and Cascade View Zone service areas. Most of the Plateau Zone service area is residential, with small pockets of commercial and office uses. Within the Plateau Zone, approximately 12 percent of the existing tax parcels were undeveloped (improvements valued at less than $10,000) as of 2017, although a much higher percentage of the parcels are underdeveloped based on the existing zoning. The Cascade View Zone was approximately 18 percent undeveloped and contains only residential and agricultural users and one fire station.

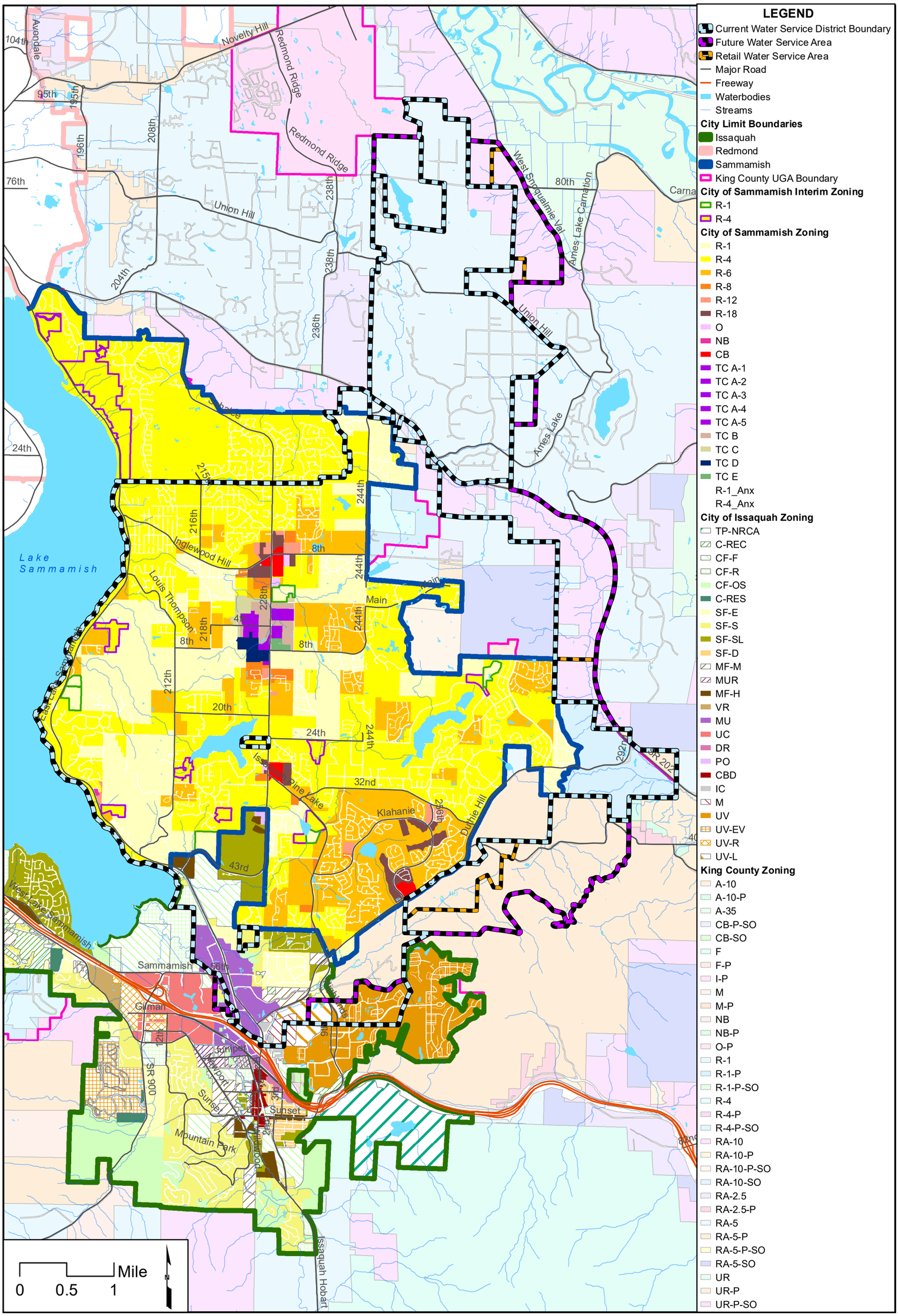

CHS ENGINEERS

Sammamish Plateau Water

Zoning

FIGURE 1-13

Water Comprehensive Plan

1.6 Future Service Area

The Future Water Service Area boundary was established under the East King County Coordinated Water System Plan and is shown in Figure 1-1. Adjustments along the boundary between the District, the Northeast Sammamish Sewer and Water District, the City of Issaquah, Union Hill Water Association and the Ames Lake Water Association have been negotiated between the purveyors. In 2012 the District added the Overdale Water Association service area into the District service area. Additional modifications with the Ames Lake Water Association are proposed and a modification with Dawnbreaker Water Association has been suggested for consideration.

The retail service area is defined as the area that can be provided service from the District in a timely and reasonable manner by direct connection to the District's system. The retail service area represents those areas that could obtain water service from the District using standard direct main extension methods over a period of time of less than three years after the request for service is received. The most likely methods to be used would be a Developer Extension Agreement (DEA) or Utility Local Improvement District (ULID), with the initiation of the process starting with an application for a DEA or petition for a ULID. The time for service provision may be influenced by requirements for easement acquisition, if required, and financing arrangements.

The area between the District's retail and future service area boundaries includes both urban and rural designated areas. The areas will eventually have service by direct main extensions, but over a period that exceeds the scope of this Plan update. There are some portions of the rural area that are far enough away from the existing water system that the District will allow new remote individual or Group B systems. [See Section 1.8.4]

Extensions of the existing water system for direct service may be accomplished through developer extension agreements, utility local improvement districts, or in some cases by a District capital improvement project. New Group B service systems would most likely be installed by the private property owner under plans approved directly by the King County Health Department. An agreement for Future Connection for District Water Service would be required in conjunction with any new Group B systems. The areas where new Group B systems are most likely to be used are in the rural areas that are separated from the current direct service area by significant geographic or topographic features. Appendices D, G and F include District resolutions adopting the requirements for service by the methods described above.

Figure 1-14 portrays those areas currently being considered for annexation in compliance with the *East King County Coordinated Water Supply Plan* and through further coordination with adjacent purveyors as noted previously. A few of the annexation areas currently receive at least partial service from the District. The Pine Lake Park area is served by the District. Limited water service is also currently provided in the West NE 80th, South Issaquah – Fall City Road area, MacDonald and Bush Lane annexation areas.

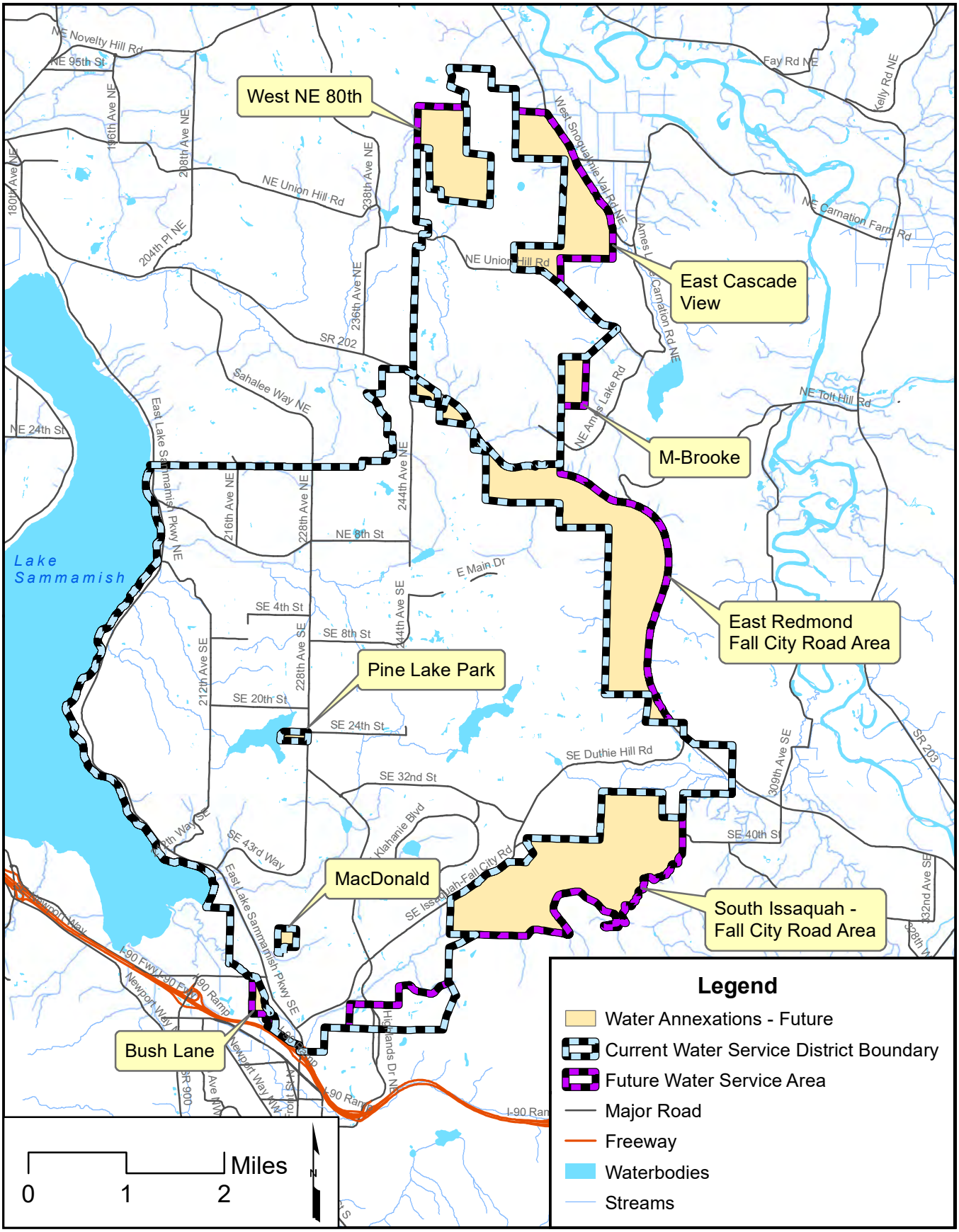

CHS ENGINEERS

Sammamish Plateau Water

Annexation Areas

FIGURE 1-14

Water Comprehensive Plan

1.7 Service Area Agreements

As noted previously, the District's planning is consistent with the future service area boundaries as initially defined in *the East King County Coordinated Water System Plan*, with some subsequent modifications developed in conjunction with adjacent purveyors. Adjustments to the future service area boundary have been made between the District and the City of Issaquah, Overdale Water Association, Northeast Sammamish Sewer & Water District, Union Hill Water Association, Ames Lake Water Association, and the City of Redmond. An additional adjustment is proposed with Ames Lake Water Association.

The service area agreements described herein also address operation and management agreements between the District and adjacent purveyors.

1.7.1 Northeast Sammamish Sewer & Water District

The District is a party to the NESSWD Agreement for Joint Operation of Water Storage Facilities. The storage facility that is the focus of this agreement is the 3-MG Tank, located in the 700 Pressure Zone. The NESSWD Agreement addresses operating pressures and water quality. Both the District and NESSWD supply water to the 3-MG Tank and there are meters in the free-flowing interties to monitor the balance of supply and water use by each district.

1.7.2 Issaquah

As the area located along the initial District and City of Issaquah boundary has been developed, service area adjustments have been made to reflect the actual purveyor of services. The majority of these adjustments are associated with the Issaquah Highlands development (previously known as Grand Ridge). There is an area within the Issaquah Highlands urban area served by the City of Issaquah, that is also currently within the District's Corporate Limits. This area had been annexed to the District when it was rural, and the District may process a withdrawal of territory to remove this area from the District.

The District and Issaquah entered into an agreement dated January 21, 2014, which considers the potential for Issaquah to assume portions of the District within the city limits. In exchange for a one million-dollar ($1,000,000) payment by the District to the City to mitigate the impacts of stormwater from the Issaquah Highlands area on the District's groundwater resources, the City agreed to not unilaterally initiate an assumption of portions of the District in Issaquah before March 17, 2024. The parties also agreed to engage on issues related to government service delivery. This Agreement was approved by the District Board by Resolution 4313, included in Appendix D.

The District and Issaquah have two interties (see Chapter 6). A prior Lease Agreement with the 297 Reservoir associated with fire protection to the City of Issaquah's Pickering area has been amended to terminate the storage lease and automatic intertie operation as of March 19, 2013. Both interties are for emergency use only at this time.

1.7.3 Union Hill Water Association

For several years the District provided on-call personnel to operate and maintain the Union Hill Water Association water system during certain non-office hours, generally every other weekend. This Agreement was discontinued at the beginning of 2017.

1.7.4 Dawnbreaker Water Association

For several years the District provided operation personnel and on-call services to the Dawnbreaker Water Association. This was discontinued in 2014.

1.7.5 Overdale Water Association

The area previously served by the Overdale Water Association had an Emergency Intertie Agreement with the District. In 2012 the area served by the Overdale Water Association completed annexation to the District and a Utility Local Improvement District was used to install improvements and allow the District to provide direct service to this area.

1.7.6 Ames Lake Water Association

The District and Ames Lake Water Association have entered into an Agreement for Emergency Intertie, to provide Ames Lake with a supplemental source in the event of an emergency. The emergency intertie was available for service in 2010.

1.7.7 City of Redmond

The District and the City of Redmond previously agreed to a service boundary adjustment for the Redmond Ridge Panhandle area. Redmond removed it from their future service area as part of their 2004 Water Comprehensive Plan. Annexation of this Redmond Ridge Panhandle area to the District was completed in 2011.

The District and the City of Redmond also have an agreement under which the City of Redmond wheels water from the regional water system through Redmond Ridge to the District's Cascade View Zone.

1.8 Service Area Policies

1.8.1 Wholesaling Water

The District provides wholesale water service to one small system that previously had its own water supply. The Boeing Estate is a small residential area that remains from what was the Boeing family farm and includes three residential structures. The Wholesale Water Agreement is for domestic water use only, metered from the District system at the intertie to a portion of the old Boeing water system. The Wholesale Water Agreement requires that if the Boeing Estate property is further developed or redeveloped the private water system will be abandoned and extension of the District's direct service system will

be completed.

1.8.2 Wheeling Water

The District does not currently wheel water through the District's system.

1.8.3 Annexation

The District follows the annexation procedures as presented in Chapter 57.24 RCW. The RCW details the methods for collecting petitions and annexing unincorporated territories. Annexation or an agreement for future annexations is required for water service. The District will also follow the withdrawal of territory procedures as presented in Chapter 57.24 RCW, which detail the methods for collecting petitions to withdraw territory from the District. The withdrawal of territory is only projected to occur in conjunction with mutually agreed upon boundary decisions between the District and adjacent purveyors.

1.8.4 Direct Connection and Remote Systems

The District policy states a preference that new water users connect directly to the District system. However, when direct connection is not possible for properties within the District's Future Service Area, usually due to proximity of facilities, and especially for those outside the Retail Service Area, the District will allow new Group B water systems within the Future Service Area. The District is not seeking to be a Satellite System Manager for systems within or outside of the Future Service Area.

<u>Prior Satellite System Management Program</u>

The District's initial formal Satellite System Management Program was adopted by Resolution 2179 in 1997 for systems within the District's future water service area. The program allowed property owners to provide their own water supply and/or water rights, and included specific requirements for the water system design and included District operation and maintenance.

The Satellite System Management Program was primarily used by property owners in response to the District's limited water supply at that time, where the properties were in close proximity to the District's existing water system. None of those projects actually resulted in a new separate water supply, as the water supply issue was resolved.

The initial Satellite System Management Program could also be applied to properties located where connection to the District's existing water system was not feasible. Only one such application was received, in 2014. In response to the 2014 request the Board reviewed the 1997 Satellite System Management Program and determined the only likely use would be by properties where extension from the District's existing water system was not feasible, primarily outside of the District's Retail Service Area but inside the Future Water Service Area. The expectation is that any proposed projects will be limited in scope and would qualify as Group B systems. The facilities appropriate for these projects would be unlikely to meet normal District standards due to limited pipe size and fire flow

capabilities. Therefore, the District's standard operation and maintenance programs would not apply. On this basis the District determined to not continue offering District services for Satellite System Management of new Group B systems.

New Group B Systems

The District would allow the new Group B system to develop with use of a private Water System Operator, and have an agreement with the District for eventual connection to the District's water system. The following is the basis for the Agreement for Future Connection for Water Service associated with Group B Water Systems, with the standard form agreement adopted by Resolution 4762, and included in Appendix E.

Basis of the Future Water Connection Agreement for Group B Systems:

1. It is not currently feasible for the District to supply water to serve the property.
2. The property is within the District's Future Water Service Boundary
3. The District is considering, at some time in the future, extending water service to serve the property.
4. The agreement is with the owner of the property.
5. Owner must design and construct the water system in accordance with applicable King County Health Department and State of Washington DOH, and State of Washington DOE standards.
6. The Owner shall own such water system.
7. Prior to the installation of the Owners' System, the Owner shall file covenants on the property identifying the Owners' responsibility to contract with a Satellite System Manager for operation and maintenance of the Group B System.
8. Owner agrees to participate in and waive protest of formation of a LID or ULID for the purpose of constructing District water improvements to serve the Property.
9. Owner agrees to participate in and waive protest of annexation to the District's Corporate Limits.
10. Upon availability of direct water service and the District's sole discretion, within one year of notification the property will be connected to the District's water system, the agreement will be terminated.
11. Upon termination of the agreement the District, at its sole option, may take ownership of some or all of the Group B water system facilities, and require abandonment of those not acquired, including but not limited to abandonment of the well(s) in compliance with Department of Ecology regulations and guidelines.

If a new proposed Group B system will include larger facilities that could meet District standards, inclusion of these for District management will be considered on a case by case basis, with a specific agreement developed for that situation.

Private Individual Wells

The District also has adopted a standard Future Water Connection Agreement, by motion at a Board Meeting on July 8, 1996, intended for use by individual single-family homes using individual private wells. This agreement is for situations where District water service

is not readily available. The Future Water Connection Agreement for individual private wells is also included in Appendix E.

Existing Group A and Group B Systems

As noted previously there are several existing Group B water systems and one Group A water system in the District service area. A map showing the existing Group B systems in the District is provided as Figure 1-7. If any of these systems wants or needs to end service as a Group B or separate Group A system and have the members obtain direct water service from the District, the District will consider consolidation of those systems into the District system on a case by case basis.

Consolidation of an existing Group A or B water system to the District will consider each of the water system elements for use by the District. For a more complex system a Water System Assessment Report may be required. The system consideration and/or report would include, but not limited to, water rights, wells, pump facilities, generators, tanks and the distribution system and appurtenances.

Water Rights:	Verify the water right quantity available for transfer, and whether transfer of the water right to an existing District well is feasible
Well(s):	Determine if the well or any components of the water supply system appropriate for use with the District's water system
Pumps:	Determine whether pumps (booster or others) or their components are appropriate for use with the District's water system, including the potential integration with the District's SCADA equipment.
Tanks:	Determine if any tanks are appropriate for use with the District's water system, including the potential integration with the District's SCADA equipment.
Generators:	Determine if any generators can continue to be utilized with the system being consolidated or elsewhere in the District's system.
Distribution System:	Analysis to determine whether the existing distribution system meets District standards, how the system can be integrated into the District's current pressure zones, and if the system has individual service water meters.

The analysis or report must identify all required system improvements to integrate the existing water system into the District system or what new facilities required to provide direct service. Individual water meters are required for each service and must match current District standards.

Any elements of the water system being transferred to the District would be done so through a Bill of Sale. Any portions of the system that do not meet the requirements for inclusion in the District's water system will be abandoned. The existing wells will also be

required to be abandoned per DOE standards. However, if the District has determined that it is not feasible to consolidate the system's water rights into the District, the private water system may offer those water rights to other interested parties.

Annexation into the District's corporate limits will be required if the water system is outside the current District Corporate boundary. Approval of the Cascade Water Alliance will also be required if the water system is outside of the District's Future Water Service Area.

The costs of the water system consolidation will be borne by the members of the system being consolidated, as well as payment of District connection charges, such as General Facility Charges and Regional Capital Facility Charges. Payment of these costs would be either at the time of service provision or through an approved District process, such as a Utility Local Improvement District. All customers of the Group A or B system being consolidated are required to execute a Water Service Application for service from the District and are subject to all District service policies.

1.8.5 Design and Performance Standards

The District's October 2017 design standards are included in Appendix F of this Water Comprehensive Plan. The design standards are updated periodically. The most current set of standards can be obtained at the District office.

1.8.6 Surcharge for Outside Customers

The District does not currently impose a surcharge for customers outside the District corporate limits.

1.8.7 Formation of Utility Local Improvement Districts

The District has established guidelines for District staff participation in the formation of ULIDs by Resolution 1971, adopted June 17, 1996. This resolution is included in Appendix G. For property outside the District's Corporate Limits, a ULID can be pursued only in conjunction with an annexation. District staff facilitate annexations within the District's retail/future service area.

1.8.8 Urban Growth Area

The majority of the Plateau Zone is located within the urban growth area (UGA) established by King County, while all of the Cascade View Zone is rural. Where direct service through water mains is available, the District strives to provide water at urban levels of service, through District standards to provide fire flow to single family areas at 1,000 gpm, and to install fire hydrants approximately every 500 feet with new water mains or with water main replacement projects. In newly developing areas, developers are required to install new facilities at sizes that will meet urban service criteria. In areas where facilities have been installed previously and no longer meet the service criteria, the District has established facility replacement programs. In addition to local facilities, the District must continue to add general facilities (tanks, wells, and transmission mains) to

meet the increasing urban demands. These required facilities are described in Chapter 8.

Local facilities required to provide service to newly developing areas are normally financed by developers or through ULIDs. General facilities are financed by collection of General Facility Charges collected from all new customers. In this manner, the District attempts to have growth pay for growth. Local facility replacement programs, on the other hand, are financed through rates.

1.8.9 Reimbursement (Latecomer) Agreements

The District allows developers or others extending District facilities to recover a portion of the facility cost from the owners of other properties that may connect to or use the facility. A copy of the District's standard Reimbursement Agreement form is included in Appendix H.

The pro rata share of a facility that may be recovered from a benefited property owner is determined on a case-by-case basis. Pro rata shares may be based on linear footage of a facility across benefited property, the number of ERUs a benefited property represents, the area of a benefited property, or a combination of factors. The District must approve the methodology. The term of the Reimbursement Agreement is 15 years.

1.8.10 Oversizing

When a water main is being installed through a Developer Extension Agreement or ULID, and the District's Water Comprehensive Plan has identified a water main size that is larger than the size required for the project installing the water main, the District normally pays for the oversizing through General Facility funds.

1.8.11 Cross-Connection Control Program

In accordance with WAC 246-290-490 and District Resolution 3340, all backflow prevention devices installed must be certified and tested by a Certified Washington State Cross-Connection Specialist or Backflow Tester. The Cross-Connection Control Program is discussed in Chapter 6.

1.8.12 System Extension

There are two primary methods of system extensions due to service requests: Developer Extensions and ULIDs.

The October 2017 version of the Developer Extension Agreement form was approved by Resolution 4738. A copy of the October 2017 Developer Extension Agreement form is provided in Appendix I. The District is responsible for ensuring that water and sewer mains installed in public streets and easements are constructed according to the adopted standards. Developers are required to ensure that the plans are developed in accordance with District standards and each plan must be approved by the District. The District also

has the authority to stop work when necessary to ensure compliance with District standards. Developers normally pay the entire cost of water and sewer extensions.

ULIDs are most frequently formed when a local area petitions the District to extend water facilities to its neighborhood. The District's Resolution 1971, setting policy and procedures for ULIDs, is provided in Appendix G. The costs of facilities extended under ULIDs are assessed against the benefited properties. The development standards for ULIDs are the same as those for Development Extension Agreements (see Appendix I).

1.8.13 Drinking Water Quality

The District obtains its water supply from a combination of surface water, from the regional supply through the Cascade Water Alliance, and groundwater, from District owned and operated wells. In 2017 approximately 81% of water supplied in the District came from District wells. The District formally adopted a Drinking Water Quality Policy Statement in May 2018 by Resolution No. 4780, copy provided in Appendix J. A summary of the Drinking Water Quality Policy Statements is provided in the following.

- Drinking Water Standards
  The District recognizes the authority of the US EPA and Washington DOH to establish drinking water quality standards, and is committed to conducting all testing and monitoring to ensure, where possible, that the quality of its water meets or exceeds state and federal standards. The District recognizes that it is solely responsible for its groundwater resource quality standards, but that the regional water suppliers bear responsibility for the surface water supply compliance.

- Groundwater and Aquifer Protection
  The District recognizes the value of its groundwater resources and the need to preserve groundwater and the aquifer which supports it as sustainable resources. The District will:
  - Engage in proactive aquifer and water quality monitoring
  - Maintain data on groundwater levels within the aquifers
  - Monitor the water quality background of raw groundwater.
  - Be an advocate for groundwater interests and sustainability with land use and stormwater management agencies
  - Monitor the codes and policies of the local land use agencies, and collaborate with those agencies on codes and initiatives which provide long term aquifer protection
  - Collaborate with other water purveyors to advance county and state regulations and policies intended to protect groundwater and the aquifer from adverse impacts of development, stormwater management, and reclaimed water.

- Outreach and Transparency
  District efforts to protect the aquifer and its groundwater resources will be transparent and include regular outreach to inform customers. The District will also engage its customers to solicit feedback and conversation regarding water quality.

1.9 Satellite Management Agencies

The use of remote Group B systems and individual private wells is addressed in Section 1.8.4. The District does not currently offer Satellite Water System management for systems outside the Future Water Service Area.

1.10 Conditions of Service

The District has requirements that must be met before water service will be provided. These requirements can be found in a variety of formats; including Board of Commissioner resolutions and minutes, applications for service, design and construction standards, other adopted programs (such as the Cross-Connection Program), as well as other agency regulations and policies set forth in this Water Comprehensive Plan.

The District may withhold provision of service until all conditions are met.

1.10.1 District Responsibilities

It is the District's responsibility to set forth the requirements for service to parties requesting new service and ensure that they are met prior to providing service.

The District requires:

- Property Owners pay their equitable share of the cost of the water system.
- Water meters to be connected to a District owned water main.
  - Main Adjacent to the Property:
    For connections to adjacent mains the District anticipates completing the installation within six weeks of payment of all connection charges. The time is set by the time required to obtain permits and schedule a crew for meter installation.
  - Main Not Adjacent to the Property:
    - Main extension may be required prior to provision of service (see Sections 1.8.12 or 1.9).
    - Non-Standard Service Line may be allowed
      Easement for private water service line required.
      Meter Installation time same as for Main Adjacent to the Property.
- Water facility extensions when properties are being developed, to provide service to and across the property being developed (to make potential service available to adjacent properties), with the scope of the improvements to be determined by the District. Properties being developed include, but are not limited to the following situations:
  - Subdivisions
  - Short subdivisions
  - Non-single family projects
  - Single family building permits where there is no main adjacent to the property and does not qualify for a Non-Standard Service Line.

Main extensions can take from four months to over a year to implement. This time is measured from the start of main extension design to completion of construction, and must allow time for definition of the project scope, survey, design, permit acquisition and installation. Each of these steps includes work by the project proponent to initiate a step, followed by District work to review, comment upon and approve the work. The District works to minimize unnecessary delays when a project step is in the District's control. For example, the District tries to complete design reviews within three weeks following receipt of plans.

- Water meter sizes to match the plumbing fixtures included with the service. The minimum size meter provided shall meet the uniform plumbing code. For single-family residential connections the meter size will also consider whether fire sprinklers are required and their minimum size requirement.

- Separate meters:
  - Single Family Residential properties – multiple structures on a property, where the primary structure is a single-family residence, may share a meter with the primary residence, if the total plumbing fixtures of all connected structures match the meters capabilities per the plumbing code. Each separate structure may also have a separate meter.
  - Non-Single Family Residential developments – for each structure and for any in-ground irrigation
  - Non-Residential developments – for each structure and for any in-ground irrigation. . (See following exception for Public-Institutional development)
  - Public Institutional developments – Same as Non-Residential developments, except that one meter may be used to serve multiple structures located on one tax parcel and operated by a single entity, with the meter size based on the total plumbing fixtures from all structures provided service from the water meter.
  - Mixed Use developments – for each type use within a structure in addition to the requirements for Non-Single Family Residential and Non-Residential developments.

- Use of Cross Connection devices where required by the District or other health authority. (Sections 1.8.11 and 6.7)

Once it has been established that service is available, the basic District responsibilities associated with that service are included on the Application for Water Service that is executed between a water service customer and the District at the time of service initiation. The Application is an agreement for service between the District and the customer. A copy of the standard Application for Water Service is provided in Appendix K. Standards for the water service installation provided by the District under this Application are included in Chapter 7 and Appendix F of this Plan. Chapter 3 contains additional information regarding water pressure and water quality.

1.10.2 Customer Responsibilities

The customer's responsibilities associated with receiving water service from the District include:

- Only obtaining water through a metered service connection associated with the property being provided service.
- Disclosure of all proposed uses of the water service, such as multiple structures and irrigation, and provision of documentation, when requested, on plumbing code requirements for minimum service size. [Note that multiple meters may not be used to feed a single building or irrigation system.]
- Executing an Application for Water Service, that includes some of the basic customer responsibilities regarding payment for service, temporary discontinuance of service, and service interruption (copy provided in Appendix K).
- Payment of all connection charges associated with the water service (see Section 1.10.3).
- Provision of pressure-regulating devices where the system pressure is higher than 80 pounds per square inch (psi) or in situations where the customer wants higher pressure than is provided by the District's system.
- Connection of any auxiliary water supply source, such as but not limited to grey water or rainwater systems, to the water system or property that is connected to the District's water system, is to be metered and separated with an air gap from the District water supply system.
    - Use of private wells is not allowed for provision of water service to a structure or use that receives service from the District.
    - District will require abandonment of existing private wells when a property changes from using a private well to District water service, unless that private well is part of a Group B system that is continuing to operate as a Group B system.
- Provision of any easements required for District water facilities to be located on the property being provided water service.
- Installation, maintenance and regular testing of cross-connection devices if their property includes certain facilities connected to the water service, including, but not limited to fire sprinklers, irrigation systems, and hydraulic boat lifts.

1.10.3 Connection Fee Schedule

The District Connection Fees can be described in five parts: General Facility Charges, Local Facility (Mainline) Charges, Meter Charges, Regional Capital Facility Charges and Permit fees. The General Facility, Local Facility and Meter charges are associated with District rates. The Regional Capital Facility Charge and permit fees are associated with outside agency payments.

1.10.3.1 General Facility Charges

The District General Facility Charge represents the customer's share of the District's source, supply, and transmission facilities and is set by District Resolution. The July 2017 General Facility Charges are based on meter size and are provided in Appendix G.

1.10.3.2 Local Facility (Mainline) Charges

The Local Facility Charge represents the customer's share of the local water mains required to provide service adjacent to and across the customer's property. The Local Facility Charge may be collected by four primary methods:

- ***Utility Local Improvement District.*** Utility Local Improvement Districts (ULIDs) are formed either through a neighborhood petition or District resolution to have the District install the local facilities required to provide service to that neighborhood. The cost of the local facility installation is distributed among the benefited properties and the local facility charge is assessed against the properties. See Appendix G for resolutions and policies regarding ULIDs.

- ***Installation of Facilities.*** In situations where a mainline must be extended to provide service to a property, the property owner may pay the local facility charge through direct payment to the contractor for the facility installation. A Developer Extension Agreement between the District and an individual, group or developer may be executed under which the facilities will be installed. A copy of the Developer Extension Agreement is included in Appendix I. The Developer Extension Agreement is updated periodically; the most recent version can be obtained at the District office.

- ***Reimbursement Agreement.*** In situations where a holder of a Developer Extension Agreement has installed facilities that provide direct service benefit to properties, and the owners of those properties have not contributed to the water main installation charges, the Developer may request a Reimbursement Agreement with the District. The Reimbursement Agreement directs the District to collect a property's share of the water main installation cost when a property is connected for service, if connection is made within 15 years. In these situations the mainline charge is based on the actual facility installation cost as set out in the Reimbursement Agreement. A copy of the standard Reimbursement Agreement is presented in Appendix H and in the Developer Extension Agreement in Appendix I.

- ***Local Facility Charge Payment***. A Local Facility Charge is collected in situations where water mains have been installed across or adjacent to a property, or may be installed at some point in the future; and the owners of the property have not participated in the cost of the existing or future water main installation through a ULID, Developer Extension Agreement, or Reimbursement Agreement. A specific local facility charge resolution may set a special Local Facility Charge for an area based on the actual installation cost of a specific local facility. For all other cases, a standard local facility charge is applied, and is based on the average cost of District facility installations over the preceding years. The current Local Facility Charge resolutions

are included in Appendix G.

1.10.3.3 Meter Installation/Drop Fees

The fees for meter installation or meter drop are set by District resolution. Installation fees are normally charged and represent the average cost of a meter installation for a service. In developments where the meter setter has been installed and paid for by the developer or property owner as part of the water main installation, a meter drop fee may be substituted for the meter installation fee. The resolution adopting the current Meter Installation and Meter Drop Fees is provided in Appendix G.

1.10.3.4 Regional Capital Facility Charges

The Regional Capital Facility Charge (RCFC) represents the District's share of Cascade Water Alliance facilities, one of the District's sources of supply. The Cascade RCFC basis is set by Cascade based on the size meter provided by Cascade members to new customers. The District pays this Cascade RCFC to Cascade following the sale of any new meters. The District's RCFC includes an excise tax component in addition to the Cascade RCFC. The District Resolution 4101 setting the District's 2011 RCFC connection fee is included in Appendix G.

1.10.3.5 Installation Permit Fees

If it is necessary for the District to acquire a permit from another jurisdiction to complete the installation of water service to a property, the cost of the permit is passed on to the customer. The most frequent example of such a fee is a City or County Right-of-Way Use Permit. The fee for the permit is based on the jurisdiction's rates.

1.10.4 Meter and Materials Specifications

Specifications for materials associated with services and meter installations are provided in Chapter 7 of this Water Comprehensive Plan and in Appendix F. These cover the water facilities from the water main up to, and including, the meter setter. The District supplies the meters directly and will provide specifications for any large meters that need to be built into the system at the time of request. The District does not have specifications for materials located on the customer side of the meter.

1.10.5 Consent Agreements for Inspection, Maintenance, and Repair Activities That May Disrupt Water Service

The Application for Water Service, executed at the time of service initiation, includes provisions for the District to be able to temporarily interrupt service, without prior notice. A copy of the standard Application for Water Service is provided in Appendix K. During normal operations when service operation is required for construction purposes, the District strives to give at least 24 hours' notice to affected customers. At least 48 hours' notice is required for work performed as part of a Developer Extension Agreement. Notification is given in written format with a "door hanger" hand-delivered to the affected properties.

1.10.6 Cross-Connection Control Requirements

Cross-connection control requirements for customers are discussed in Chapter 6 of this plan. District Resolution 3340 and the Cross-Connection Control Program are provided in Appendix L.

1.10.7 Latecomer Payback Provisions

The District has a standard Reimbursement Agreement form included with the Developer Extension Agreement (see Appendices E and F). Reimbursement Agreements may be executed by developers installing facilities that provide a direct benefit to other properties. The Developer must request a Reimbursement Agreement within 30 days of the District's acceptance of the associated facility. The Reimbursement Agreement is based on the actual or reasonable cost of the installation of the facilities, and includes a term of 15 years. (See also Sections 1.8.9 and 1.10.3.2)

1.10.8 Developer Extension Requirements, Design Standards, Financing Responsibilities

The District's Developer Extension Agreement form is included in Appendix I. This form is used in cases where anyone requesting service is required to extend a District facility. The agreement is structured in the following four main sections:

- General Provisions of the agreement
- Terms of the agreement, including associated fees
- Forms—sample documents associated with extension of water and sewer facilities
- Technical specifications—design standards, material standards, construction standards, standard details, and drawing standards

1.11 Complaints

A detailed discussion of the District's customer complaint response program is included in Chapter 6.

CHAPTER TWO - BASIC PLANNING DATA AND WATER DEMAND FORECASTING

This page intentionally left blank.

2. Basic Planning Data and Water Demand Forecasting

Table of Contents

2.1 Current Population, Service Connections, Water Use, and Equivalent Residential Units 2-1

2.1.1 Current Population 2-1

2.1.2 Total Service Connections 2-1

2.1.3 Water Use Data Collection 2-3

2.1.4 Equivalent Residential Units 2-11

2.2 Projected Land Use, Future Population, and Water Demand 2-14

2.2.1 Projected Land Use 2-14

2.2.2 Projected Population 2-14

2.2.2.1 Near-term ERU Forecast 2-15

2.2.2.2 Long-term ERU Forecast 2-17

2.2.3 Water Demand Forecast 2-24

Tables

Table 2-1 Sizes and Types of Meters by Customer Class 2-2

Table 2-2 Multi-Family Units Per Connection 2-3

Table 2-3 Summary of Historical Water Production and Consumption (2009-2016) 2-4

Table 2-4 Historical Annual Water Production and Purchases, by Source (2009-2016) 2-5

Table 2-5 Historical Monthly Water Production and Purchases (2009-2016) 2-6

Table 2-6 Historical Annual Water Consumption, by Customer Classification (2009-2016) 2-8

Table 2-7 Historical Bi-Monthly Retail Water Sales (2009-2016) 2-10

Table 2-8 Equivalent Residential Units (ERUs) and Meter Size 2-12

Table 2-9 Historical Equivalent Residential Unit (ERU) Analysis (2014-2016) 2-13

Table 2-10 Summary of ERU Forecast by Jurisdiction (2017- Buildout) 2-16

Table 2-11 Analysis of Projected Demographic City of Sammamish Growth Rates (Based on Comprehensive Plans) 2-19

Table 2-12 Analysis of Projected Demographic City of Issaquah Growth Rates (Based on Comprehensive Plans) 2-20

Table 2-13 Analysis of Projected Demographic Growth Rates (Based on PSRC Data) 2-21

Table 2-14 Long-Term (2015-buildout) Growth Rate Ranges for Water Demand Forecast 2-22

Table 2-15 ERU Forecast (2017-2037) by Service Zone and Customer Classification 2-23

Table 2-16 Water Demand Forecast (2017-2037), by Service Zone and Customer Classification (in mgd) 2-25

Table 2-17 Water Demand Forecast Summary Without and With Additional

Conservation……..2-27

Figures

Figure 2-1 Historical Monthly Water Production and Purchases (2014 – 2016)……2-7
Figure 2-2 Average Water Consumption, by Percent of Total (2014 – 2016)……2-9
Figure 2-3 Bi-Monthly Retail Water Sales (2014 – 2016) 2-10
Figure 2-4 Bi-Monthly Retail Water Sales by Customer Class (2014 – 2016)……. 2-11
Figure 2-5 Zoning Classifications Based on Area……2-14
Figure 2-6 Future Demand Development Logic 2-18

2. Basic Planning Data and Water Demand Forecasting

The planning sources for this Water Comprehensive Plan are from the Puget Sound Regional Council (PSRC) Vision 2040 Land Use Target forecast, 2015 *City of Sammamish Comprehensive Plan*, the 2017 City of Issaquah Comprehensive Plan, the 2016 *King County Comprehensive Plan*, the King County *Sensitive Areas Folio*, and detailed information about future development from District, City of Sammamish, City of Issaquah and King County records. Zoning is in accordance with the zoning maps as published by all three land use jurisdictions as of mid-2017 and the City of Sammamish Town Center Plan. The requirements and recommendations of the 1989 *East King County Coordinated Water System Plan* and its 1996 update are incorporated into the plan where applicable.

2.1 Current Population, Service Connections, Water Use, and Equivalent Residential Units

2.1.1 Current Population

As of January 1, 2017, approximately 62,400 people were served by the District. Nearly 60,500 lived in the Plateau Zone and just over 1,900 persons were served in the Cascade View Zone. Within the Plateau Zone, approximately 50,900 people lived within the City of Sammamish, about 8,900 lived within the City of Issaquah, and 2,600 lived within unincorporated King County. According to the PSRC summary of census data for 2010, an average household size within the District's Plateau Zone was estimated to be 2.93 persons per household and in the Cascade View Zone it was estimated to be 2.80 persons per household. The PSRC Land Use Target forecast data for 2016 estimates the average household size to be 2.84 persons per household within the Plateau Zone and 2.76 persons per household within the Cascade View Zone.

2.1.2 Total Service Connections

In 2016, the District had an average total of 18,114 service connections, ranging from the 5/8- inch and 3/4-inch single-family meters to 4-inch public/institutional meters, within the water service area. A breakdown of the sizes and types of meters in each customer class is shown in Table 2-1.

The number of units in each multi-family accounting code is provided in Table 2-2. In 2016, the District had a total of 1,015 multi-family service connections, including 5,329 units, representing 3,725.5 ERUs. A breakdown of the multi-family meters is shown in Table 2-2.

Table 2-1
Sizes and Types of Meters by Customer Class

Meter Size	Bill Code	Number of Connections	Multiplier	ERUs
Single Family				
5/8 inch	104	174.0	1.0	174.0
3/4 inch	100	15324.0	1.0	15324.0
1 inch Fire Sprinkler	107	536.0	1.0	536.0
3/4 inch Fire Sprinkler	108	1.0	1.0	1.0
2 inch Fire Sprinkler	109	0.0	1.0	0.0
3/4 inch 2 on 1	105	8.0	2.0	16.0
1-1/2 inch Fire Sprinkler	106	2.0	1.0	2.0
1 inch	101	191.0	2.5	477.5
1-1/2 inch	102	4.0	5.0	20.0
2 inch	103	1.0	8.0	8.0
Multi-Family				
3/4 inch	110	174.0	1.0	174.0
1 inch	111	131.0	2.5	327.5
1-1/2 inch	112	534.0	5.0	2670.0
2 inch	113	54.0	8.0	432.0
3 inch	114	0.0	16.0	0.0
4 inch	115	0.0	25.0	0.0
1 inch Fire Sprinkler	117	122.0	1.0	122.0
Commercial/Industrial				
3/4-inch	120	43.0	1.0	43.0
1-inch with FF	129	0.0	1.0	0.0
1-inch	121	55.0	2.5	137.5
1-1/2-inch	122	48.0	5.0	240.0
2-inch	123	29.0	8.0	232.0
3-inch	124	5.0	16.0	80.0
4-inch	125	1.0	25.0	25.0
2-inch	133	0.0	8.0	0.0
3-inch	134	1.0	16.0	16.0
Public/Institutional				
3/4 inch	140	37.0	1.0	37.0
1 inch	141	14.0	2.5	35.0
1-1/2 inch	142	15.0	5.0	75.0
2 inch	143	19.0	8.0	152.0
3 inch	144	14.0	16.0	224.0
4 inch	145	4.0	25.0	100.0
Irrigation				
3/4-inch	155	13.0	1.0	13.0
5/8-inch	163	0.0	1.0	0.0
1-inch	156	4.0	2.5	10.0
1-1/2-inch	157	15.0	5.0	75.0
2-inch	158	4.0	8.0	32.0
3-inch	159	1.0	16.0	16.0
4-inch	164	1.0	25.0	25.0
Irrigation w/o audit				
3/4-inch	150	222.0	1.0	222.0
5/8-inch	162	11.0	1.0	11.0
1-inch	151	104.0	2.5	260.0
1-1/2-inch	152	159.0	5.0	795.0
2-inch	153	32.0	8.0	256.0
3-inch	154	1.0	16.0	16.0
4-inch	165	0.0	25.0	0.0
Dedicated Fire Flow				
1-1/2-inch	166	1.0	0.0	0.0
3/4-inch	172	0.0	0.0	0.0
1-inch	173	2.0	0.0	0.0
1-1/2-inch	174	1.0	0.0	0.0
2-inch	175	1.0	0.0	0.0
Wholesale				
Boeing Estates – 1-inch	171	1	2.5	2.5
Total for 2016[1]		18,114		23,414

1. Based on the average of connection totals throughout the year

Table 2-2
Multi-Family Units Per Connection

Meter Size	Bill Code	Number of Housing Units	Number of Connections	Multiplier	ERUs	MF Units per ERU
3/4 inch	110	198	174	1	174	1.14
1 inch	111	421	131	2.5	327.5	1.29
1-1/2 inch	112	3662	534	5	2670	1.37
2 inch	113	926	54	8	432	2.14
3 inch	114	0	0	16	0	-
4 inch	115	0	0	25	0	-
1 inch Fire Sprinkler	117	122	122	1	122	1.00
Total		5,329	1,015.0		3,725.5	1.31 Avg.

2.1.3 Water Use Data Collection

Existing water use data were developed based on well production records, metered water use for each customer, results of the District's water use efficiency reporting, which includes estimates of water used for construction, firefighting, and main flushing. Historical water use data is summarized in Table 2-3. Detailed historical data regarding water production (by source and by month) and water consumption (by customer class and by bimonthly billing periods) are provided in the tables and figures following Table 2-3.

It is noted that Other Consumption, which includes water use through emergency interties, water trucks with honor reporting, metered hydrant use, flushing and jetting water for construction and maintenance activities, and other known non-revenue uses such as firefighting, has not been recorded separately for the Plateau and Cascade View Zones. In Table 2-15 the "Other Consumption" use is reported as "Other Water Demand" all occurring in the Plateau Zone. This assumption was used because only limited Other Consumption would normally occur in the Cascade View Zone, principally for water main flushing and firefighting purposes. In the future the District will maintain records regarding the Zone in which the Other Consumption water use occurs.

Table 2-3
Summary of Historical Water Production and Consumption (2009-2016)

	2009		2010[4]		2011		2012[5]		
	Annual Total (MG)	Daily (gpd)	Annual Total (MG)	Daily (gpd)	Annual Total (MG)	Daily (gpd)	Annual Total (MG)	Daily (gpd)	
Production / Purchases									
Well Withdrawals	1,958	5,365,276	1,591	4,360,100	1,456	3,990,148	1,321	3,608,053	
Purchased Water	197	540,240	175	478,706	171	468,904	376	1,026,041	
Total Production/ Purchases	2,156	5,905,517	1,766	4,838,806	1,628	4,459,053	1,696	4,634,094	
NESSWD Interties	0.413	1,132	0.00066	1.81	0.00034	0.93	(0.0019)	(5.27)	
Recharge (ASR)	327	895,840	151	412,495	52	142,956	33	90,762	
Total Water To System[1]	1,829	5,010,808	1,616	4,426,314	1,575	4,316,097	1,663	4,543,327	
Consumption									
Retail Consumption	1,724	4,723,423	1,477	4,046,396	1,484	4,066,794	1,577	4,308,735	
Other Consumption	30	82,712	26	70,055	26	70,055	17	45,301	
Total Consumption	1,754	4,806,135	1,503	4,116,450	1,510	4,136,849	1,594	4,354,036	
Distribution System Leakage[2]	75	204,673	113	309,863	65	179,248	69	189,291	
(% of total water to system)	4.08%	4.08%	7.00%	7.00%	4.15%	4.15%	4.17%	4.17%	
Maximum Day Production	07/27/09	13,279,260	07/26/10	11,165,200	09/06/11	9,381,416	08/18/12	10,713,604	
MDD:ADD Peaking Factor[3]		2.65		2.52		2.17		2.36	
	2013		**2014**		**2015**		**2016**		**Daily Average (2014-2016, gpd)**
	Annual Total (MG)	Daily (gpd)	Annual Total (MG)	Daily (gpd)	Annual Total (MG)	Daily (gpd)	Annual Total (MG)	Daily (gpd)	
Production / Purchases									
Well Withdrawals	1,361	3,727,886	1,435	3,930,521	1,571	4,305,284	1,441	3,938,069	
Purchased Water	366	1,001,742	366	1,003,541	371	1,015,653	369	1,008,331	
Total Production/ Purchases	1,726	4,729,628	1,801	4,934,061	1,942	5,320,937	1,810	4,946,399	5,067,133
NESSWD Interties	(0.0004)	(1.15)	0.006	16.4	0.057	156	(0.053)	(145)	9
Recharge (ASR)	32	89,022	36	98,477	16	45,159	0	0	47,879
Total Water To System[1]	1,694	4,640,605	1,765	4,835,601	1,926	5,275,934	1,810	4,946,255	5,019,263
Consumption									
Retail Consumption	1,536	4,209,054	1,609	4,408,121	1,786	4,893,953	1,704	4,654,871	
Other Consumption	22	60,438	14	38,356	15	41,425	11	29,727	
Total Consumption	1,558	4,269,492	1,623	4,446,477	1,801	4,935,378	1,715	4,684,598	4,688,818
Distribution System Leakage[2]	135	371,113	142	389,124	124	340,556	96	261,657	330,446
(% of total water to system)	8.00%	8.00%	8.05%	8.05%	6.45%	6.45%	5.29%	5.29%	6.60%
Maximum Day Production	08/05/13	10,234,884	07/11/14	10,092,016	07/07/15	12,517,000	08/20/16	10,626,000	11,078,339
MDD:ADD Peaking Factor[3]		2.21		2.09		2.37		2.15	2.20

MG = million gallons; gpd = gallons per day

Minor discrepancies between the WUE Reports and the data shown above are attributed to slight differences in unit conversion and rounding, unless noted otherwise.

1. (Total Production/Purchases) plus (NESSWD Interties) less (Recharge).
2. (Total Water to System) less (Total Consumption). This is consistent with the DOH definition of distribution system leakage.
3. (Maximum Day Production) divided by (Total Water to System).
4. Audit of 2010 ASR use found more water used for recharge than initially estimated for WUE reporting. This accounts for the reduced water to the system.
5. A minor reporting error was found in the 2012 WUE report. The error has been corrected in this data and accounts for the differences between this 2012 data and the WUE reported data.

Table 2-4 presents a summary of historical water production and purchases from the District's sources of supply for years 2009-2016. In 2016, total water provided to the District's system equaled 1,810 million gallons (MG). Monthly production by source for the years 2006-2016 is provided in Appendix B.

Table 2-4
Historical Annual Water Production and Purchases by Source (2009-2016)

	Total Annual Production or Purchase (MG)[1]							
	2009	**2010**	**2011**	**2012**	**2013**	**2014**	**2015**	**2016**
Well Withdrawals								
Well 1	83	73	85	86	107	102	139	99
Well 2	0	0	0	0	0	0	0	0
Well 2.2	100	75	99	63	49	64	100	94
Well 4	432	317	278	396	187	196	173	234
Well 7	275	500	516	505	376	273	331	266
Well 8	309	238	240	0	206	259	282	148
Well 9	323	0	0	0	121	178	0	241
Well 10	105	69	62	46	51	52	32	85
Well 11.1	0	0	0	0	0	0	0	0
Well 11.2	219	263	138	157	189	225	460	201
Well 12	33	24	32	21	24	43	35	32
Well 13	29	19	7	46	52	41	17	41
Well 14[2]	0	0	0	0	0	0	0	0
Well 15[2]	49	14	0	0	0	0	0	0
Subtotal - Wells	1,958	1,591	1,456	1,321	1,361	1,435	1,571	1,441
Purchased Water[3]								
North	49	59	72	34	23	21	42	2
South	148	115	99	342	342	345	329	367
Subtotal - Purchases	197	175	171	376	366	366	371	369
Total Water Production/ Purchases[4]	2,156	1,766	1,628	1,696	1,726	1,801	1,942	1,810
NESSWD Interties[5]	0.413	0.001	0.000	(0.002)	0.000	0.006	0.057	(0.053)
Recharge[6]	327	151	52	33	32	36	16	0
Total Water to System[7]	1,829	1,616	1,575	1,663	1,694	1,765	1,926	1,810

MG = million gallons
1. Source of data: District spreadsheets named "(year) Pump Log.xls"
2. Wells 14 and 15 are no longer operational.
3. Water obtained from regional supply interties.
4. (Well Withdrawals) plus (Purchased Water).
5. Net water obtained from (or provided to, as indicated by negative values) Northeast Sammamish Sewer and Water District.
6. Water injected into Aquifer Storage and Recovery (ASR) wells.
7. (Total Water Production/Purchases) less (Recharge) plus (NESSWD Interties).

Table 2-5 and Figure 2-1 illustrate the monthly production/purchase characteristics of the District. The amount of water delivered to the system increases during summer months (notably in July and August), a trend typical of municipal water systems due to irrigation and other outdoor uses.

Table 2-5
Historical Monthly Water Production and Purchases (2009-2016)

	Total Monthly Production and Purchase (MG)[1]							
	2009	**2010**	**2011**	**2012**	**2013**	**2014**	**2015**	**2016**
January	108	110	106	95	107	102	101	111
February	93	87	92	92	93	98	102	98
March	90	120	98	98	108	105	108	107
April	92	103	101	97	102	100	108	128
May	150	124	114	127	131	140	156	166
June	239	118	128	123	174	188	283	207
July	311	238	198	198	273	283	320	230
August	266	265	246	264	242	262	280	277
September	155	136	200	221	144	161	144	164
October	126	116	104	139	109	112	121	122
November	93	98	90	105	102	108	101	105
December	105	101	99	106	109	104	102	97
Annual Total	1,829	1,616	1,576	1,663	1,694	1,765	1,926	1,810

MG = million gallons

1. Source of data: District spreadsheets named "(year) Pump Log.xls" Represents total water available for consumption by the District. Calculated as water pumped from District wells plus water purchased from regional system, less water injected into ASR wells, and accounting for net water transfers to NESSWD.

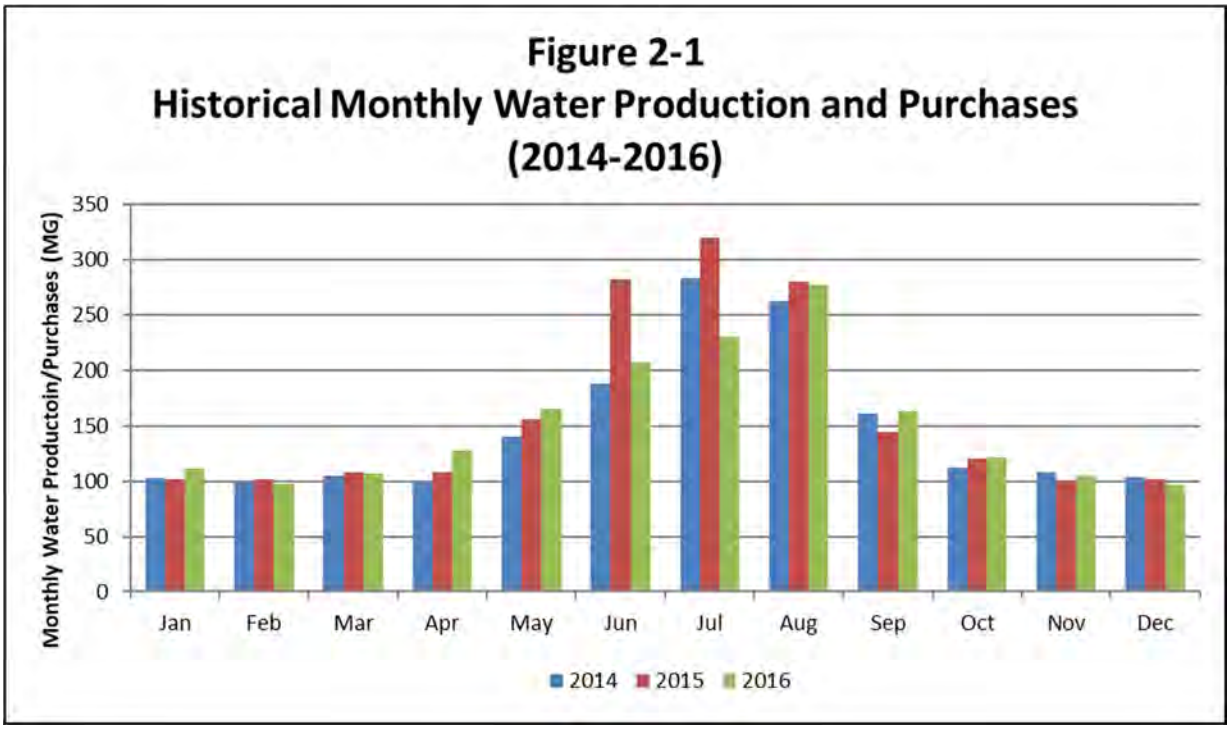

Table 2-6 presents a summary of historical water consumption by District customers. In 2016, total recorded consumption was 1,715 MG. Figure 2-2 illustrates the breakdown in consumption according to customer classification.

Table 2-6
Historical Annual Water Consumption by Customer Classification
(2009-2016)

	Total Annual Consumption (MG)							
	2009	**2010**	**2011**	**2012**	**2013**	**2014**	**2015**	**2016**
Retail Consumption[1]								
Single-Family Residential	1,263	1,075	1,083	1,154	1,128	1,190	1,318	1,243
Multi-Family Residential	197	195	197	199	194	195	196	203
Commercial	73.2	71.4	71.2	70.7	69.4	69.2	75.3	79.6
Industrial	0.66	0.70	0.76	0.53	0.56	0.56	0.62	0.77
Government	17.5	16.9	17.8	18.8	16.9	18.2	22.1	30.7
Irrigation w/o Audit	150	105	101	117	111	119	154	130
Irrigation w/Audit	22.8	13.1	13.9	17.2	17.5	16.9	19.9	16.1
Subtotal - Retail	1,724	1,477	1,484	1,577	1,536	1,609	1,786	1,704
Other Consumption[2]								
Overdale Sales3	15.1	12.6	12.9	11.2	9.07	0	0	0
Honor Trucks	2.27	0.55	0.76	0.65	0.31	0.63	1.53	1.79
Metered Hydrants	1.91	1.00	0.43	0.47	1.47	1.27	7.89	2.39
Flushing and Jetting	10.9	11.4	11.5	4.30	11.2	12.1	5.70	6.70
Subtotal - Other	30.2	25.6	25.6	16.6	22.1	14.0	15.1	10.9
Total Water Consumption[4]	1,754	1,503	1,510	1,594	1,558	1,623	1,801	1,715

MG = million gallons

1. Source of data: District spreadsheets named "Water Consumption Statistics (year).xls" for 2009-2011. Source of data for 2012-2016 Statistical Reports by Customer Category in Northstar Billing System
2. Source of data for Overdale Sales, Honor Trucks, and Metered Hydrants: District spreadsheet named Hydrant Consumption.xls" Source of data for Flushing and Jetting, and Other Non-Revenue Water Use: District spreadsheet named "(Year) Flushing and Jetting.xls" Other Non-Revenue Water Use includes measured water consumption through main breaks, system tampering, and fire district reports.
3. Overdale Water Association water provided through an Emergency Intertie Agreement.
4. (Retail Consumption) plus (Other Consumption).

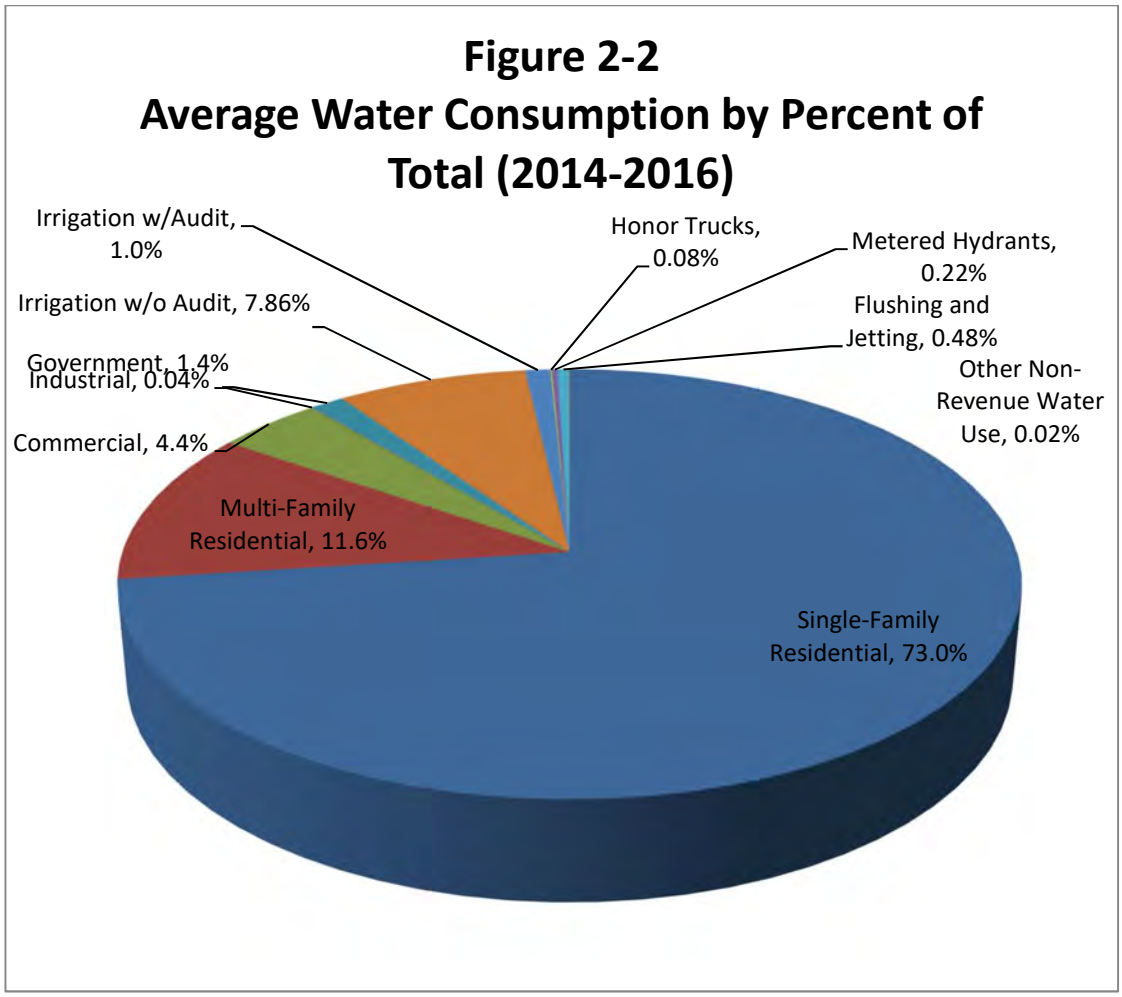

Table 2-7 and Figure 2-3 provide the bi-monthly retail water sales of the District, revealing a trend similar to that of production/purchases, with peak sales occurring during summer months.

Table 2-7
Historical Bi-Monthly Retail Water Sales (2009-2016)

	Total Bi-Monthly Retail Water Sales (MG)[1,2]							
	2009	**2010**	**2011**	**2012**	**2013**	**2014**	**2015**	**2016**
January/February	194	198	189	209	180	185	193	195
March/April	172	181	180	173	174	178	171	189
May/June	253	195	192	203	227	239	265	267
July/August	495	356	324	303	362	423	566	424
September/October	410	363	400	457	389	374	396	420
November/December	200	183	199	232	203	210	196	208
Annual Total Retail Water Sales	1,724	1,477	1,484	1,577	1,536	1,609	1,786	1,704

MG = million gallons

1. Source of data: District spreadsheets named "Water Consumption Statistics (year).xls"
2. Water sales for any given two-month period reflect consumption that took place in the previous two-month period (e.g., water sales depicted for September/October reflect consumption that took place in July/August).

Figure 2-3 provides the water consumption trend through the year for all combined water customers. Figure 2-4 presents the same trend for individual customer classes, or 2014-2016.

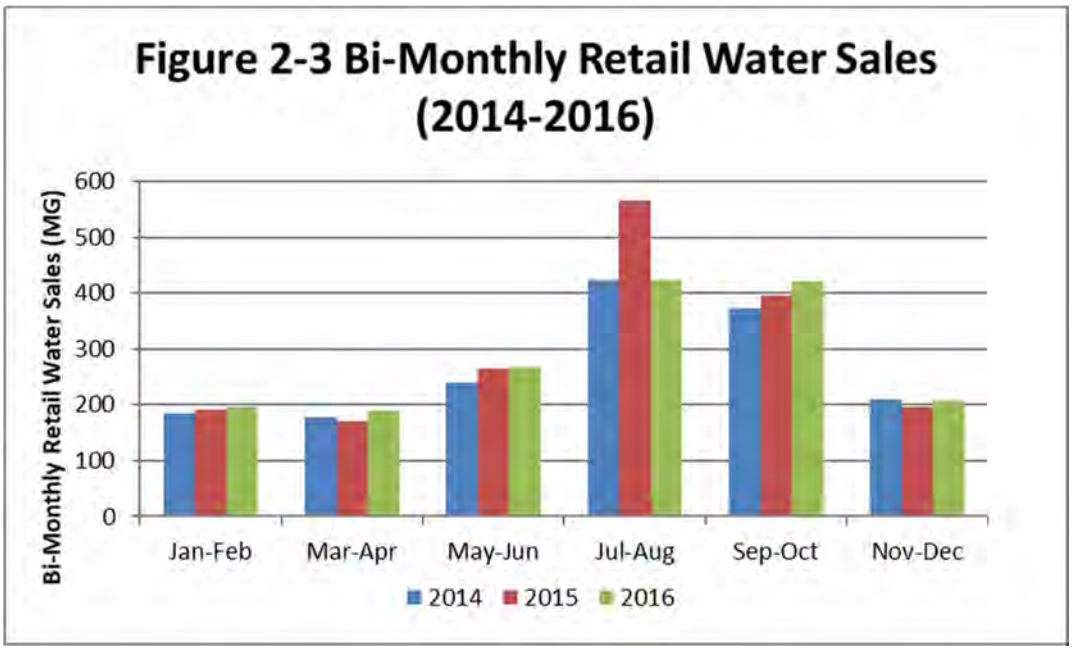

Figure 2-4 Bi-Monthly Retail Water Sales by Customer Class (2014-2016)

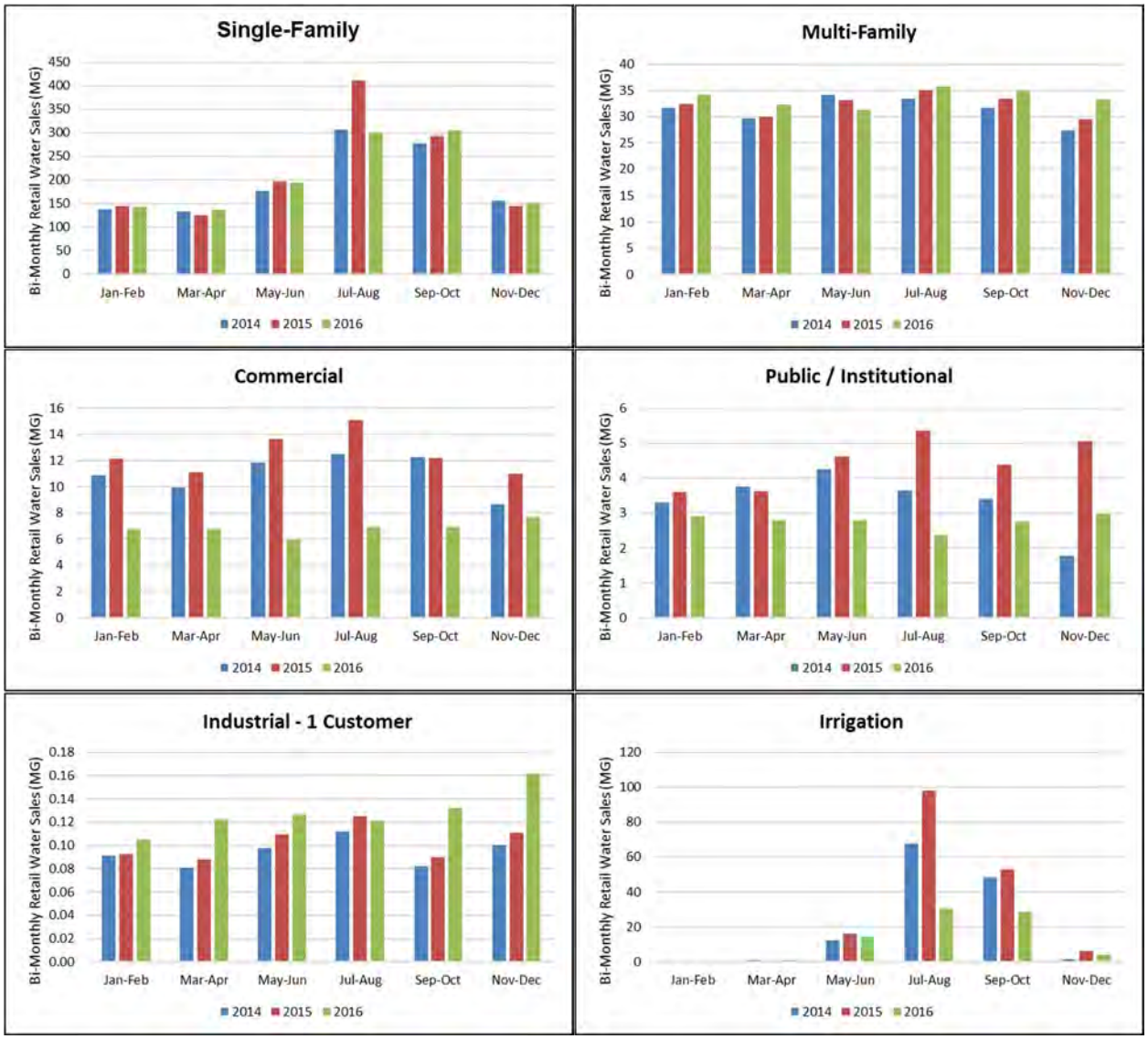

2.1.4 Equivalent Residential Units

An Equivalent Residential Unit (ERU) is generally defined as the amount of water that is required by a single-family residence. In the District, the number of ERUs attributed to a specific customer is based on the size of the customer's water meter. The weighting factors for various meter sizes are determined using American Water Works Association (AWWA) capacity ratings. The number of ERUs per meter size is summarized in Table 2-8.

Table 2-8
Equivalent Residential Units (ERUs) and Meter Size

Meter Size (inches)	3/4	1	1-1/2	2	3	4	6	8	10
Number of ERUs	1	2.5	5	8	16	25	50	80	115

There are a few cases in which the meter size weighting factor is not used directly. Such cases include the Residential 2-on-1 Meter and the Residential–Fire Sprinkler, as noted in Table 2-1. A Residential 2-on-1 Meter indicates that two single-family homes on different properties are served by one meter. These situations are rare and are contrary to current District policy. The existing Residential 2-on-1 Meters are situations in which the initial water customer added a second connection without the District's permission. As these situations are discovered and noted, the rate is adjusted to reflect the added use. The District also encourages customers to rectify the situation through purchase of a second meter. Residential–Fire Sprinklers represent situations in which the residence would normally require only a 3/4-inch meter, but a larger size is required to support the fire sprinkler system.

As shown in Table 2-1, approximately 23,414 ERUs were in service in both zones of the District in 2016. Approximately 97 percent of these ERUs were located in the Plateau Zone; the remainder were in the Cascade View Zone. Approximately 89.3 percent of the ERUs are residential (71.3 percent single-family and 18.0 percent multi-family). Of the 10.7 percent of the ERUs that are non-residential, 46 percent are irrigation meters.

For comparison, as recently as the 1990s, in the District, the average demand of water use by one ERU was approximately 268 gallons per ERU per day. The District’s weighted average daily demand per ERU for all use types during the 2014-2016 period was approximately 204 gallons. This figure is based on the total water purchased by customers, excluding distribution system losses, divided by all customer service meters with use greater than zero.

The 3-Year Average ERU Water Use Factors for Single-Family, Multi-Family Residential and Non-Residential, as presented in Table 2-9, are based on data from 2014-2016. These use factors, 213 gallons per day for Single-Family Residential, 144 gallons per day for Multi-Family Residential, and 233 gallons per day for Non-Residential, are used to develop projected water usage. The value of 233 gallons was also used for the Mixed Use future ERUs, conservatively assuming more of the use in such areas will be Non-residential than Multi-Family.

Table 2-9

Historical Equivalent Residential Unit (ERU) Analysis (2014-2016)

Retail Customer Class	2014			2015			2016			3-Year Average ERU Water Use Factor[4]
	Annual Consumption (MG)[1]	ERUs[1, 2]	ERU Water Use Factor (gpd/ERU)[3]	Annual Consumption (MG)[1]	ERUs[1, 2]	ERU Water Use Factor (gpd/ERU)[3]	Annual Consumption (MG)[1]	ERUs[1, 2]	ERU Water Use Factor (gpd/ERU)[3]	
Single-Family Residential	1,190.09	15,801	206	1,317.53	15,986	226	1,243.41	16,511	208	213
Multi-Family Residential	195.05	3,663	141	196.38	3,705	143	202.80	3,728	149	144
Non-Residential (Subtotal)	223.80	2,885	213	272.36	2,892	258	257.38	3,063	230	234
Commercial	69.21	*728*	*249*	*75.25*	*728*	*283*	*79.59*	*702*	*291*	*274*
Industrial	0.56	*16*	*97*	*0.62*	*16*	*105*	*0.77*	*16*	*132*	*111*
Government	18.15	*595*	*93*	*22.09*	*600*	*122*	*30.66*	*622*	*144*	*120*
Irrig. w/o Audit	118.97	*1,352*	*233*	*154.49*	*1,351*	*307*	*130.31*	*1,553*	*240*	*260*
Irrig. w/Audit	16.91	*194*	*232*	*19.91*	*198*	*304*	*16.06*	*171*	*239*	*258*
All Uses			**195**			**216**			**201**	**204**

MG = million gallons; gpd = gallons per day; ERU = Equivalent Residential Unit

1. Source of data: District spreadsheets named "Water Consumption Statistics (year).xls", for accounts with use greater than zero.
2. Average ERU count for a given customer class for a given year.
3. (Annual Consumption) divided by (ERUs) divided by 365 days/yr.
4. Average ERU water factor, 2014-2016. Draft WCP version included slightly different annual consumption values for Non-Residential class. Correct Figures are reflected above. The three-year average use per ERU for this class increased by 1 gpd, less than 0.5%. The value of 233 used to develop the forecast presented in Table 2-16 was not changed in the revised Plan.

2.2 Projected Land Use, Future Population, and Water Demand

2.2.1 Projected Land Use

Based on the current zoning and the *King County Comprehensive Plan*, which designates almost 68.5 percent of the District as an urban growth area, the type of development that is projected to occur throughout the District is primarily residential. This assumption is supported by the type of development applications the District has been processing for future construction. The approximate percentages of land area zoned for single-family residential, multi-family residential (R-12 and greater), and commercial/industrial uses are shown in Figure 2-5. The current King County, City of Sammamish and City of Issaquah zoning is shown in Figure 1-12 in Chapter 1.

Figure 2-5
Zoning Classifications Based on Area

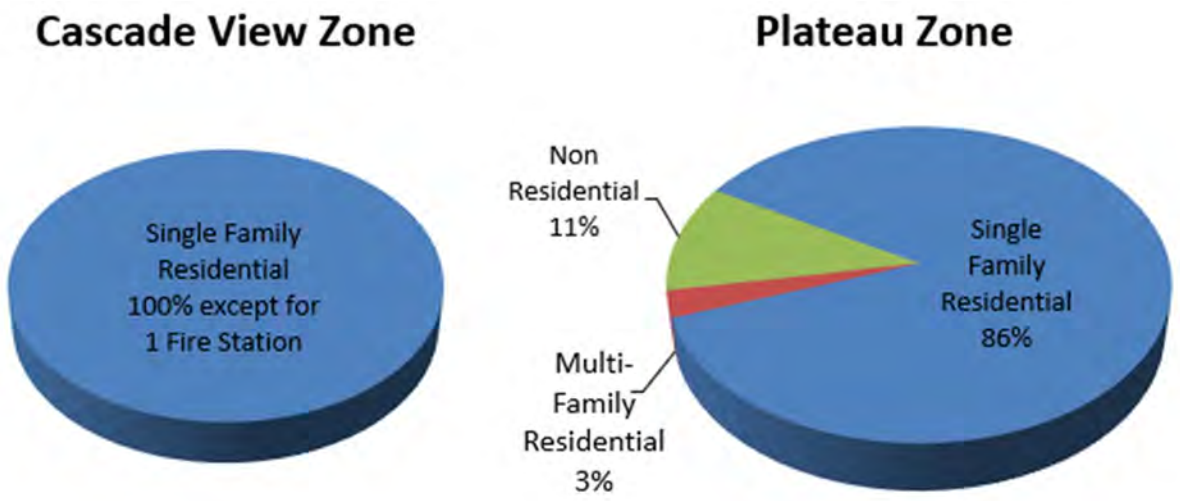

2.2.2 Projected Population

The District experienced rapid population growth rates from the late 1970s through the early 2000s. The growth rate slowed somewhat in the mid-2000s, due in part to the District's temporary water availability limitations (discussed in Chapter 1), and also to the City of Sammamish development limitations that were in place while the City developed their initial Comprehensive Plan. The growth rate declined in the late-2000s due to the economic recession. With the economic recovery, growth is increasing steadily again as evident by the rate of new connections over the past few years (see Figure 1-3).

The demographic growth projections for the District's service area were considered in two segments of the 20-year planning period:

1. Near-term (2017-2022) projections, based primarily on information related to

proposed developments known to the District.

2. Long-term (2023-2027 and 2028-2037) projections, prepared using a detailed analysis of available land capacity combined with growth rate forecast developed by the PSRC. The growth anticipated in local comprehensive land use plans is also reviewed. The long-term forecast includes consideration of the buildout projection for the service area.

Both segments are described in more detail below.

2.2.2.1 Near-term ERU Forecast

Over the last few decades, the majority of growth in the District has occurred in developments, including plats, short plats, commercial and public-institutional projects. These developments typically take from two to five years to complete. The District is usually tracking over 100 developer projects with developer extension agreements, through stages ranging from planning to design to construction to near-completion.

Growth projected through these developments has been distributed over the near-term planning horizon (2017-2022), based on available information regarding the timing of the development projects. Table 2-10 provides a summary of this analysis, with projected ERUs organized according to land use jurisdiction. Collectively, the near-term compound annual growth rate, through year 2022, in ERUs to be served by the District is approximately 1.65%. The table also includes the long-range forecast, discussed below.

The District recognizes the near-term ERU projection is an estimate, with the timing of each development susceptible to change and the possibility that currently unidentified development projects may be initiated within the near-term window. However, this approach provides for the most accurate forecast of near-term future ERUs based on currently available data.

Table 2-10
Summary of ERU Forecast by Jurisdiction (2017 - Buildout)

Land Use Jurisdiction	2017	2018	2019	2020	2021	2022	2023	2024	2025	2026	2027	2032	2037	Build out
Plateau Zone														
City of Sammamish	19,403	19,803	20,120	20,350	20,684	20,997	21,283	21,586	21,889	22,091	22,293	22,293	22,553	26,762
City of Issaquah	3,164	3,281	3,303	3,303	3,303	3,495	3,534	3,574	3,609	3,615	3,621	3,668	3,785	4,691
King County	372	430	430	451	451	451	455	460	465	467	470	482	498	1,374
Subtotal	22,938	23,514	23,852	24,104	24,437	24,943	25,272	25,620	25,962	26,173	26,384	26,443	26,835	32,826
Cascade View Zone														
King County	788	792	803	804	805	805	816	826	837	839	841	856	882	1,103
Total System	23,726	24,306	24,655	24,908	25,242	25,748	26,088	26,446	26,800	27,012	27,225	27,299	27,717	33,929

Effective Growth Rate (2017-2037)[1]			
Plateau Zone		*Cascade View Zone*	
City of Sammamish	0.76%	King County	0.57%
City of Issaquah	0.90%		
King County	1.48%		
Subtotal	0.79%		
Total System		0.78%	

1. Compound annual growth rate.

2.2.2.2 Long-term ERU Forecast

The District's long-term forecast considers the future buildout ERU capacity for all parcels within the District's service area and the PSRC forecast household growth rate forecasts, as described below.

The buildout capacity was prepared using a detailed GIS-based analysis that considered property information for all tax parcels in the District's future service area. Each parcel's zoning and area was obtained from King County, City of Sammamish or City of Issaquah data and was used to calculate each property's theoretical maximum development potential. This maximum level was then refined, or modified, using specific property information such as: existing water customer class and service level, existing development of the site, active proposed development projects, and property characteristics including general topography, sensitive areas as well as other individual property features that would impact use of the property.

The existing property service levels and development proposals were obtained from District records. The property characteristics were determined from a combination of aerial photographs, general topography, land use agency sensitive area folios, and general knowledge of the area. For most properties the resulting estimated buildout ERU capacity was less than the theoretical maximum development potential. A flow-chart illustrating the long-term ERU analysis methodology is provided in Figure 2-6.

A specific area, known as the City of Sammamish Town Center, was evaluated based on the City's planning information for development of this area. The ERU forecast evaluation considered the different Town Center Zones, planned residential units, commercial square footage allocations and incentives, and whether there was a retail or office emphasis in the zone. The evaluation anticipates that the area will be fully developed by year 2027, as indicated by the City. The total ERUs estimated for the Town Center area at buildout is 2,047. This represents an increase of almost 1,500 ERUs over the estimate at buildout for the same area based on the zoning in place prior to the Town Center Plan.

This analysis provides an estimate of a realistic ultimate buildout ERU capacity for all parcels, which are then added together to forecast the total number of ERUs in the District at buildout. Table 2-10 summarizes the number of projected ERUs at buildout (33,929 in total). The actual distribution of growth within the future service area will undoubtedly differ from the detail used to develop the forecast, but the overall scale should be appropriate. This component of the analysis does not indicate the rate at which growth will occur or when the buildout ERU capacity will be reached. That element is considered in the following step.

Figure 2-6
Future Demand Development Logic

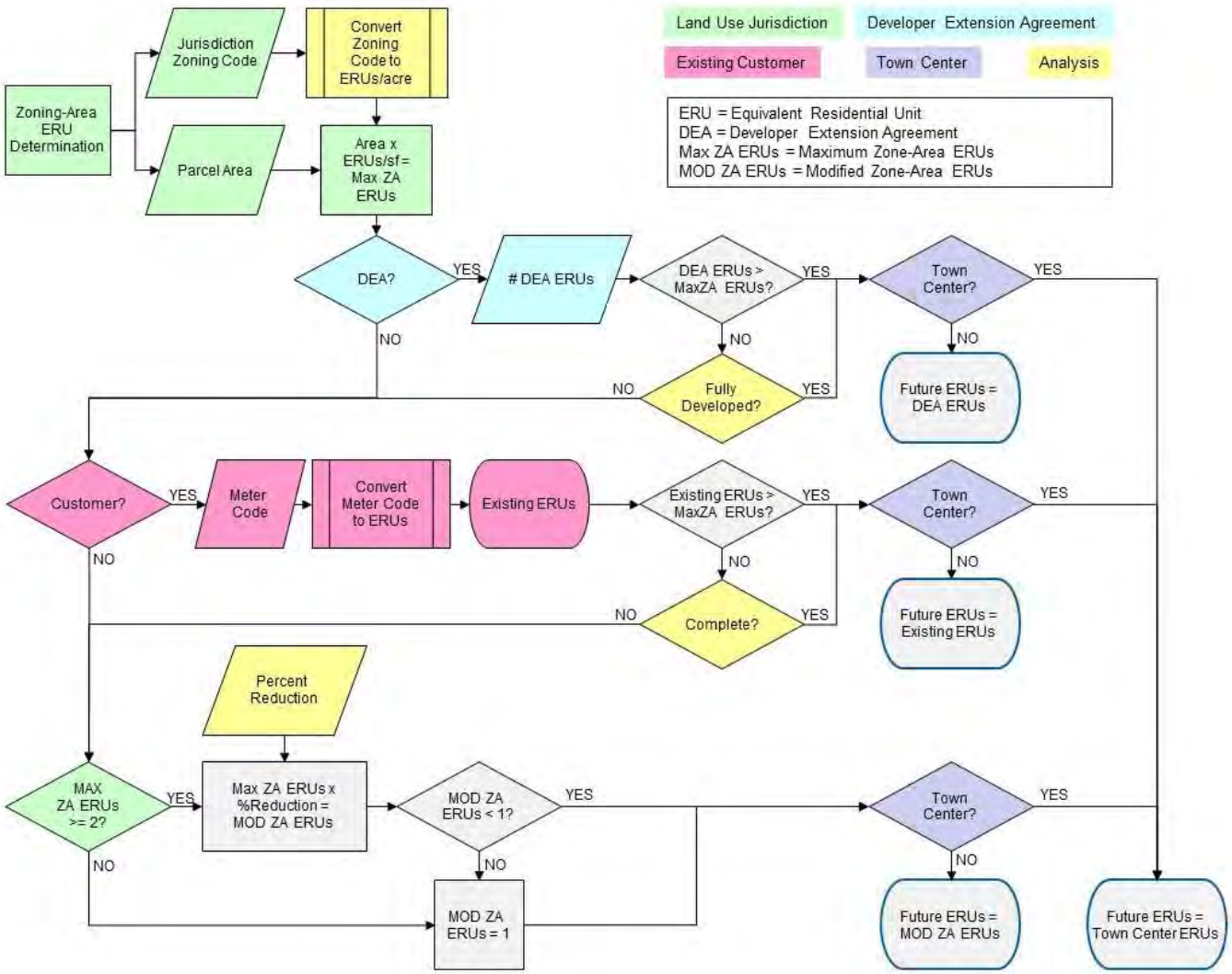

Growth-related information was reviewed for the District Future Water Service Area (FWSA) as presented in the City of Sammamish and City of Issaquah comprehensive land use plans, the King County Comprehensive Plan and by the Puget Sound Regional Council (PSRC) Vision 2040 - Land Use Target. The PSRC data was chosen for use in the Plan because it provides a consistent basis for evaluation as it covers both cities and unincorporated King County and can be applied to a more refined area than the King County Comprehensive Plan data. Additionally, PSRC provides the most recent data and is the basis of population per housing unit figures. Information from each City's Comprehensive Plan is provided in the following for comparison purposes.

City of Sammamish

Table 2-11 summarizes the growth-related information presented in the comprehensive land use plans for Sammamish. The primary population data points of interest are the Washington State Office of Financial Management (OFM) data for 2017 and the City's Comprehensive Plan estimate for 2040. The projected compound annual growth rate for Sammamish is interpreted from these points to be approximately 0.09%.

Table 2-11

Analysis of Projected Demographic City of Sammamish Growth Rates (Based on Comprehensive Plans)

City of Sammamish		
Year	**Population**	**Notes**
2010	45,780	Census, April 1, 2010
2012	47,420	City of Sammamish Comprehensive Plan 2015[1] Volume II Background Information, January 2014, Ch 3, Community Profile of Sammamish 2035, pages 5 & 6
2013	48,060	
2016	61,250	City of Sammamish[2]
2016	63,773	Est. US Census Bureau[3]
2017	62,240	WA State OFM, as of April 1, 2017
2040	63,529	City of Sammamish Comprehensive Plan 2015[1] Volume II Background Information, January 2014, Ch 3, Community Profile of Sammamish 2035, pages 5 & 6

1. http://www.codepublishing.com/WA/Sammamish/?SammamishCP/SammamishCP.html
2. https://www.sammamish.us/government/about/statistics/
3. https://www.census.gov/quickfacts/fact/table/sammamishcitywashington/PST045216

City of Issaquah

Table 2-12 summarizes the growth-related information presented in the comprehensive land use plans for the City of Issaquah. The primary population data points of interest are the OFM data for 2019 and the City's Comprehensive Plan estimate for 2031. The

projected compound annual growth rate for Issaquah is interpreted from these points to be approximately 1.79%.

Table 2-12

Analysis of Projected Demographic City of Issaquah Growth Rates (Based on Comprehensive Plans)

City of Issaquah		
Year	**Population**	**Notes**
2010	30,434	Census, April 1, 2010
2016	37,322	Est. US Census Bureau[1]
2016	34,590	WA State OFM, as of April 1, 2016
2017	36,030	WA State OFM, as of April 1, 2017
2018	37,110	City of Issaquah Comp Plan 1995, amended 2019[2]
2020	39,319	City of Issaquah Comp Plan 1995, amended 2019[2]
2025	42,971	City of Issaquah Comp Plan 1995, amended 2019[2]
2031	46,739	City of Issaquah Comp Plan 1995, amended 2019[2]

1. https://www.census.gov/quickfacts/fact/table/issaquahcitywashington#viewtop
2. https://www.issaquahwa.gov/DocumentCenter/View/1267 - Table L-5

PSRC

Growth-related information for the District FWSA beyond year 2022 was extracted from the PSRC Vision 2040 Land Use Target forecast for increase in population and housing units. The PSRC forecast includes data by US Census Tract from the 2010 census. Tracts are geographic subdivisions of area typically smaller than cities, towns and census-designated places. The District FWSA includes land within 15 census tracts. Portions of some tracts extend outside the FWSA. The PSRC data includes the year 2000 and 2010 population and household count by tract, and forecasts of each for years 2025, 2030, 2035 and 2040. The data for each tract was allocated to the District based on land area within the FWSA. That data was summed by city and county jurisdiction and by District service zone. The population growth rate, household growth rate and population per household was calculated from the underlying data by jurisdiction or service zone. Growth between the PSRC data points was presumed to increase linearly.

Analysis of the PSRC population forecast for year 2016 indicates a total population in the future water service area lower than the District estimates for its service population as of the end of 2016. The PSRC value is estimated based on interpolation for an actual value for 2010 and forecast value for 2025. The District maintains a count of housing units by customer account. That count of housing units is presumed to be a reasonable basis for annual determination of population served by the District.

The population per household varies by land use and over time, as evident in the PSRC

values for each service zone. The prior *2010 Water Comprehensive Plan* was based on 2.87 persons per household within the Plateau Zone and 2.94 persons per household in the Cascade View Zone. Those values were derived from 2006 PSRC data. The 2010 census data indicates values for the Plateau Zone increased to 2.93 and the Cascade View Zone decreased to 2.80. The PSRC forecast anticipates both values will decline by year 2040, to 2.61 for the Plateau Zone and to 2.64 for the Cascade View Zone. The forecast values for 2016 are 2.84 for the Plateau Zone and 2.76 for the Cascade View Zone.

Due to the declining population per household, and because water demand forecasting is based on changes in equivalent residential units rather than population, the change in housing units over time is the primary growth factor considered from the PSRC data. The growth factors and population densities from PSRC data are summarized in Table 2-13. As evident in the data, the PSRC Vision 2040 process anticipates a period of sustained growth through year 2025 followed by a decade of limited change and then an increase in housing growth rates from 2035-2040.

The results and corresponding effective growth rates by jurisdiction, from start to end of the forecast period, are presented in Table 2-10.

Table 2-13

Analysis of Projected Demographic Growth Rates
(Based on PSRC Data)

Household Population by Service Zone							
Plateau Zone							
Year	*2017*	*2018*	*2019*	*2020*	*2021*	*2022*	*2023*
Persons/Unit	2.82	2.80	2.79	2.77	2.76	2.74	2.73
Year	*2024*	*2025*	*2026*	*2027*	*2032*	*2037*	*2040*
Persons/Unit	2.71	2.70	2.69	2.69	2.66	2.63	2.61
Cascade View Zone							
Year	*2017*	*2018*	*2019*	*2020*	*2021*	*2022*	*2023*
Persons/Unit	2.75	2.75	2.74	2.73	2.73	2.72	2.72
Year	*2024*	*2025*	*2026*	*2027*	*2032*	*2037*	*2040*
Persons/Unit	2.71	2.70	2.70	2.70	2.67	2.65	2.64
Housing Units Growth Rate (linear) by Jurisdiction							
			2010-2025	2025-2030	2030-2035	2035-2040	
City of Sammamish			1.27%	0.08%	0.31%	0.59%	
City of Issaquah			1.64%	0.23%	0.60%	1.35%	
Unincorporated King County			1.55%	0.38%	0.52%	1.23%	
Future Water Service Area			1.34%	0.14%	0.37%	0.76%	
Housing Units Growth Rate (compound) by Jurisdiction							
			2010-2025	2025-2030	2030-2035	2035-2040	
City of Sammamish			1.17%	0.08%	0.31%	0.59%	
City of Issaquah			1.48%	0.23%	0.59%	0.21%	
Unincorporated King County			1.40%	0.37%	0.52%	1.20%	
Future Water Service Area			1.23%	0.14%	0.36%	0.75%	

Data source - PSRC Vision 2040 Land Use Target census tract level forecast (2015) allocated by area within District future water service area.

A summary comparison of the various growth rates identified in Tables 2-11, 2-12 and 2-13 is provided in Table 2-14.

Table 2-14
Comparison of Demographic Growth Rates

Jurisdiction	Jurisdiction Comprehensive Plan	PSRC Forecast[2]	Difference
City of Sammamish	0.09%	0.60%	PSRC forecast is 0.51% higher
City of Issaquah[1]	1.55%	0.90%	PSRC forecast is 0.65% lower
King County	not reviewed	0.88%	not applicable

1. Jurisdiction plan goes through 2031; rate reflects 2017 to 2031.
2. PSRC Forecast represents compound annual growth of housing units 2017-2037.

The near-term growth projections through 2022 are based on specific development information provided to the District through Developer Extension Agreement applications. In addition, specific growth projections for the Sammamish Town Center area are applied through 2027. The PSRC housing unit growth rate ranges were then applied adding to the near-term ERU forecast to develop the full 20-year ERU forecast. Table 2-15 provides a detailed summary of this projection, by service zone and customer classification. Also provided in Table 2-15 is an estimate of the projected population to be served by the District in future years. These population estimates are based upon projected ERUs and populations per household developed from PSRC data, as explained in more detail in the table footnotes.

Table 2-15
ERU Forecast (2017-2037) by Service Zone and Customer Classification[1]

	2017	2018	2019	2020	2021	2022	2023	2024	2025	2026	2027	2032	2037
Plateau Zone													
Single-Family Residential													
City of Sammamish	15,534	15,825	15,901	15,940	16,075	16,187	16,284	16,384	16,485	16,485	16,485	16,485	16,743
City of Issaquah	417	508	507	507	507	699	715	748	776	781	785	821	906
King County	282	340	340	361	361	361	368	373	377	380	382	394	411
Subtotal	16,233	16,672	16,747	16,807	16,942	17,246	17,367	17,505	17,638	17,645	17,652	17,700	18,060
Multi-Family Residential													
City of Sammamish	2,344	2,466	2,508	2,508	2,508	2,508	2,506	2,506	2,507	2,507	2,507	2,507	2,508
City of Issaquah	1,873	1,873	1,891	1,891	1,891	1,891	1,891	1,892	1,892	1,892	1,892	1,893	1,896
King County	3	3	3	3	3	3	0	0	0	0	0	0	0
Subtotal	4,220	4,341	4,401	4,401	4,401	4,401	4,397	4,398	4,399	4,399	4,399	4,400	4,404
Non-Residential													
City of Sammamish	1,525	1,445	1,445	1,475	1,504	1,534	1,564	1,593	1623	1653	1,682	1,682	1,682
City of Issaquah	874	901	906	906	906	906	910	910	910	910	910	910	910
King County	88	88	88	88	88	88	88	88	88	88	88	88	88
Subtotal	2,486	2,433	2,438	2,468	2,497	2,527	2,561	2,590	2,620	2,650	2,679	2,679	2,679
Mixed Use													
City of Sammamish	0	68	267	429	597	768	930	1,102	1,274	1,447	1619	1,619	1,619
City of Issaquah	0	0	0	0	0	0	18	25	31	32	34	45	73
King County	0	0	0	0	0	0	0	0	0	0	0	0	0
Subtotal	0	68	267	429	597	768	947	1,126	1,305	1,479	1,653	1,664	1,692
Subtotal - Plateau Zone	22,938	23,514	23,852	24,104	24,437	24,943	25,272	25,620	25,962	26,173	26,384	26,443	26,835
Cascade View Zone													
Single-Family Residential													
King County	775	779	790	791	792	792	802	813	824	826	828	843	869
Non-Residential													
King County	14	14	14	14	14	14	14	14	14	14	14	14	14
Subtotal - Cascade View Zone	788	792	803	804	805	805	816	826	837	839	841	856	882
TOTAL SYSTEM	23,726	24,306	24,655	24,908	25,242	25,748	26,088	26,446	26,800	27,012	27,225	27,299	27,717
Population Forecast[3, 4, 5]													
Plateau Zone	61,363	63,642	66,891	69,038	71,711	74,606	77,331	79,806	82,525	84,805	87,389	86,703	87,097
Cascade View Zone	2,130	2,141	2,163	2,158	2,161	2,153	2,182	2,203	2,224	2,229	2,235	2,250	2.302
Total System	63,493	65,782	69,055	71,196	73,872	76,759	79,513	82,009	84,748	87,034	89,625	88,954	89,399

1. Forecast for years 2017-2022 based upon District analysis for all parcels. Forecast for growth in Sammamish Town Center for buildout by 2027 developed by District analysis. Forecast beyond 2022, other than for Town Center, based on growth rate of households derived from PSRC projection.
2. All Current and Forecast ERUs in the Cascade View Zone are located in unincorporated King County and are either Single-Family Residential or Non-Residential. No Multi-family or Mixed Use is forecast in the Cascade View zone.
3. Forecast of population served is calculated as (Residential Units) multiplied by (average persons per household [PPHH]). Single Family = 1 Res Unit/ERU, Multi-Family = 2016 Ave Units per ERU = 1.31, Mixed Use = Mixed Use Residential uses 2018 average values of Mixed Use Res ERUs = 70% of Mixed Use ERUs x 7.84 Res Units/ERU.
4. Average PPHH based upon PSRC projections (Vision 2040 Land Use Target). Values for PPHH for the years listed above are presented in Table 2-12.
5. The ERUs represented by irrigation meters located on parcels with Single-Family & Multi-Family domestic meters are aggregated with the domestic ERUs, resulting in a population figure that is higher than actually anticipated. In the base year of 2016 these irrigation meters represented approximately 1,731 ERUs and 4,900 in population.

2.2.3 Water Demand Forecast

Using the ERU projections contained in Table 2-15 the District projects future water volumetric demands (i.e., in millions of gallons per day or gallons per minute) to plan for supply requirements. Table 2-16 summarizes the demand forecast, arranged by service zone, customer classification, and land use jurisdiction.

Average day demand (ADD) is the product of the ERUs and the 3-year average ADD/ERU for that customer class. ADD includes an allowance for other demand and for distribution system leakage (DSL) based on historical patterns[1]. Maximum day demand (MDD) is the product of ADD (not including DSL) and the 3-year weighted average MDD:ADD factor, plus DSL. The Peak Hour Demand (PHD) is calculated per the DOH December 2009 Water System Design Manual, based on MDD per ERU and factors provided by the manual. For the PHD calculation, the MDD per ERU is the product of the 3-year weighted average MDD:ADD factor and the 3-year ADD per ERU for all customer classes.

In total, the District's 10-year (2027) ADD is projected to be 5.99 mgd, and the MDD is projected to be 12.7 mgd. The 20-year (2037) ADD is projected to be 6.10 mgd. The associated MDD is forecast to be 13.0 mgd. The District's 10-year PHD is projected to be 13,756 gpm for the Plateau Zone and 508 gpm for the Cascade View Zone. The 20-year PHD is projected to be 14,002 gpm for the Plateau Zone and 528 gpm for the Cascade View Zone. The effective PHD to MDD ratio for the Plateau Zone is initially 1.56, declining to 1.55 over the forecast period. The effective PHD to MDD ratio for the Cascade View Zone is initially 1.82 and declines to 1.78 over the forecast period.

[1] Per Table 2-3, the historical DSL is 6.60%. The demand forecast was developed using a value of 6.33%, based on an early iteration of Table 2-3, and recognizing the trend for decreasing DSL.

Table 2-16
Water Demand Forecast (2017-2037) by Service Zone and Customer Classification

Average Day Demand (ADD)													
Plateau Zone													
	2017	**2018**	**2019**	**2020**	**2021**	**2022**	**2023**	**2024**	**2025**	**2026**	**2027**	**2032**	**2037**
Single-Family Residential[1]													
City of Sammamish	3.31	3.38	3.39	3.40	3.43	3.45	3.47	3.50	3.52	3.52	3.52	3.52	3.57
City of Issaquah	0.09	0.11	0.11	0.11	0.11	0.15	0.15	0.16	0.17	0.17	0.17	0.18	0.19
King County	0.06	0.07	0.07	0.08	0.08	0.08	0.08	0.08	0.08	0.08	0.08	0.08	0.09
Subtotal	3.46	3.56	3.57	3.59	3.61	3.68	3.70	3.73	3.76	3.76	3.77	3.78	3.85
Multi-Family Residential[2]													
City of Sammamish	0.34	0.36	0.36	0.36	0.36	0.36	0.36	0.36	0.36	0.36	0.36	0.36	0.36
City of Issaquah	0.27	0.27	0.27	0.27	0.27	0.27	0.27	0.27	0.27	0.27	0.27	0.27	0.27
King County	0.00	0.00	0.00	0.00	0.00	0.00	0.00	0.00	0.00	0.00	0.00	0.00	0.00
Subtotal	0.61	0.63	0.64	0.64	0.64	0.64	0.63	0.63	0.63	0.63	0.63	0.64	0.64
Non-Residential[3]													
City of Sammamish	0.35	0.34	0.34	0.34	0.35	0.36	0.36	0.37	0.38	0.38	0.39	0.39	0.39
City of Issaquah	0.20	0.21	0.21	0.21	0.21	0.21	0.21	0.21	0.21	0.21	0.21	0.21	0.21
King County	0.02	0.02	0.02	0.02	0.02	0.02	0.02	0.02	0.02	0.02	0.02	0.02	0.02
Subtotal	0.58	0.57	0.57	0.57	0.58	0.59	0.60	0.60	0.61	0.62	0.62	0.62	0.62
Mixed Use[4]													
City of Sammamish	0.00	0.02	0.06	0.10	0.14	0.18	0.22	0.26	0.30	0.34	0.38	0.38	0.38
City of Issaquah	0.00	0.00	0.00	0.00	0.00	0.00	0.00	0.01	0.01	0.01	0.01	0.01	0.02
King County	0.00	0.00	0.00	0.00	0.00	0.00	0.00	0.00	0.00	0.00	0.00	0.00	0.00
Subtotal	0.00	0.02	0.06	0.10	0.14	0.18	0.22	0.26	0.30	0.34	0.38	0.39	0.39
Other Water Demand[5]	0.04	0.04	0.04	0.04	0.04	0.04	0.04	0.04	0.04	0.04	0.04	0.04	0.04
Subtotal - Plateau Retail Demand[6]	4.69	4.81	4.88	4.94	5.01	5.12	5.20	5.28	5.35	5.40	5.45	5.46	5.55
Distribution System Leakage[7]	0.30	0.30	0.31	0.31	0.32	0.32	0.33	0.33	0.34	0.34	0.34	0.35	0.35
Subtotal - Plateau Zone ADD[8]	4.99	5.11	5.19	5.25	5.33	5.45	5.53	5.61	5.69	5.74	5.80	5.81	5.90

Table 2-16 (cont.)
Water Demand Forecast (2017-2037) by Service Zone and Customer Classification

Average Day Demand (ADD)													
Cascade View Zone[9]													
	2017	**2018**	**2019**	**2020**	**2021**	**2022**	**2023**	**2024**	**2025**	**2026**	**2027**	**2032**	**2037**
Single-Family Residential[1]													
King County	0.165	0.166	0.168	0.169	0.169	0.169	0.171	0.173	0.176	0.176	0.177	0.180	0.185
Multi-Family Residential[2,9]													
King County	0.000	0.000	0.000	0.000	0.000	0.000	0.000	0.000	0.000	0.000	0.000	0.000	0.000
Non-Residential[3,9]													
King County	0.003	0.003	0.003	0.003	0.003	0.003	0.003	0.003	0.003	0.003	0.003	0.003	0.003
Subtotal - Cascade View Zone Retail	0.168	0.169	0.172	0.172	0.172	0.172	0.174	0.177	0.179	0.179	0.180	0.183	0.188
Distribution System Leakage[7]	0.011	0.011	0.011	0.011	0.011	0.011	0.011	0.011	0.011	0.011	0.011	0.012	0.012
Subtotal - Cascade View Zone ADD[10]	0.179	0.180	0.182	0.183	0.183	0.183	0.185	0.188	0.190	0.191	0.191	0.195	0.200
TOTAL SYSTEM - ADD	5.17	5.29	5.37	5.43	5.51	5.63	5.71	5.80	5.88	5.93	5.99	6.00	6.10
Maximum Day Demand (MDD)[11]													
Plateau Zone	10.6	10.9	11.1	11.2	11.4	11.6	11.8	12.0	12.1	12.2	12.3	12.4	12.6
Cascade View Zone	0.382	0.383	0.389	0.389	0.390	0.390	0.395	0.400	0.405	0.406	0.407	0.415	0.427
Total System - MDD	11.0	11.3	11.4	11.6	11.7	12.0	12.2	12.4	12.5	12.6	12.8	12.8	13.0
Peak Hour Demand (PHD)[12]													
Cascade View Zone	11,540	11,827	11,997	12,122	12,289	12,541	12,706	12,879	13,050	13,155	13,260	13,290	13,486
Plateau Zone	482	484	489	490	490	490	495	501	506	507	508	516	529
Total System - PHD	12,022	12,311	12,486	12,612	12,779	13,031	13,201	13,380	13,556	13,662	13,769	13,806	14,015

2017 = Planning/Base Year; 2027 = 10-year Planning Horizon; 2037 = 20-year Planning Horizon
ADD and MDD shown in MGD. PHD shown in gpm.

1. Forecast ERUs (see Table 2-14) multiplied by the District's 3-year average single-family residential ERU water use factor of 213 gpd/ERU (see Table 2-9).
2. Forecast ERUs (see Table 2-14) multiplied by the District's 3-year average multi-family residential ERU water use factor of 144 gpd/ERU (see Table 2-9).
3. Forecast ERUs (see Table 2-14) multiplied by the District's 3-year average non-residential ERU water use factor of 233 gpd/ERU (see Table 2-9).
4. Forecast ERUs (see Table 2-14) multiplied by the District's 3-year average non-residential (conservatively assuming most of mixed use is non-residential) ERU water use factor of 233 gpd/ERU (see Table 2-9).
5. Based on actual Other Demand consumption data for 2015 (see Table 2-3), highest use in past 3 years. Assumed to remain constant through 2037.
6. Total of Single-Family Residential, Multi-Family Residential, Non-Residential Retail, Mixed Use and Other demands in the Plateau Zone.
7. Based upon District's 3-year average distribution system leakage (per DOH definition), as percentage of production, i.e. 6.33% (see Table 2-3).
8. Total of Plateau Zone Retail Water Demands and Distribution System Leakage.
9. All Current and Forecast ERUs in the Cascade View Zone are located in unincorporated King County and are either Single-Family Residential or Non-Residential. No Multi-family or Mixed Use is designated in the Cascade View Zone.
10. Total of Cascade View Zone Retail Water Demands and Distribution System Leakage.
11. MDD calculated by using the 3-year average MDD:ADD peaking factor of 2.20 (see Table 2-3) times ADD (subtotal without Distribution System Leakage), plus Distribution System Leakage.
12. PHD = ((MDD per ERU / 1440) * (C * N + F)) + 18 where N = ERUs and C = 1.6 and F = 225 for N > 500, per DOH Dec. 2009 WSDM. Overall MDD per ERU is the 3-Year average of the ADD/ERU for the entire system (204) as shown in Table 2-9 times the 3-year average MDD:ADD peaking factor of 2.20 (see Table 2-3).

Through implementation of its Water Conservation Program, which is discussed in detail in Chapter 4, the District anticipates realizing a reduction in water demand over the planning period. As described in Chapter 4, the District's goal is to achieve average annual water demand savings of 4.20%, and peak season savings of 3.40% by 2019, with these percent level savings continuing into the future. The impacts of these anticipated conservation savings on projected water demand are summarized in Table 2-17.

Table 2-17
Water Demand Forecast Summary Without and With Additional Water Use Efficiency

Year	Demand Without Additional Water Use Efficiency		Demand With Additional Water Use Efficiency	
	ADD (mgd)	Peak Season Demand (mgd)	ADD (mgd)	Peak Season Demand (mgd)
2018	5.29	7.46	5.14	7.29
2027	5.99	8.44	5.73	8.15
2037	6.10	8.60	5.84	8.31

CHAPTER THREE - SYSTEM ANALYSIS

This page intentionally left blank.

3. System Analysis

Table of Contents

3.1 Source Capacity Analysis……3-1
3.1.1 Design Criteria 3-1
3.1.2 Source Capacity Evaluation 3-1
3.1.2.1 Plateau Zone 3-1
3.1.2.2 Cascade View Zone 3-5
3.2 Storage Capacity Analysis……..3-6
3.2.1 Design Criteria 3-6
3.2.1.1 Operating and Dead Storage Volumes 3-6
3.2.1.2 Equalizing Volume 3-7
3.2.1.3 Fire Flow Volume 3-7
3.2.1.4 Standby Volume 3-7
3.2.2 Storage Capacity Evaluation 3-8
3.2.2.1 Plateau Zone Summary 3-9
3.2.2.2 Cascade View Zone System-wide Summary 3-24
3.3 Distribution System Analysis..... 3-29
3.3.1 Analysis Methodology 3-29
3.3.2 System Components 3-29
3.3.3 Water Demand Allocation 3-30
3.3.4 Calibration 3-30
3.3.5 Modeling Scenarios 3-32
3.3.6 Peak Hour Analysis Results 3-32
3.3.6.1 Plateau Zone 3-32
3.3.6.2 Cascade View Zone 3-34
3.3.7 Fire Flow Analysis Results……3-37
3.3.7.1 Plateau Zone……..3-37
3.3.7.2 Cascade View Zone……..3-44
3.3.8 Redundancy Analysis……3-48

Tables

3-1 Evaluation of Source Adequacy for Plateau Zone (Summer Months, Peak Season)……..3-2
3-2 Evaluation of Source Adequacy for Plateau Zone Groups (Summer Months, Peak Season)……..3-3
3-3 Evaluation of Source Adequacy for Cascade View Zone…… 3-5
3-4 Summary of Plateau Zone Storage Capacity Analysis…… 3-10
3-5 Evaluation of Storage Adequacy for 700 Zone…….. 3-13
3-6 Evaluation of Storage Adequacy for 650 Zone……..3-15
3-7 Evaluation of Storage Adequacy for 297 Zone…….. 3-17
3-8 Summary of Cascade View Zone Storage Capacity Analysis…… 3-24

3-9 Storage Tank Geometry and Utilization Summary…… 3-28
3-10 2037 Fire Flow Deficiencies – Plateau Zone……..…3-43
3-11 2037 Fire Flow Deficiencies – Cascade View Zone……..3-47

Figures

3-1 Storage Components…….....3-6
3-2 3.0 MG Tank - 700 Zone Group……3-19
3-3 7.0 MG Tank - 650 Zone Group……3-20
3-4 2.0 MG Tank - 650 Zone Group…….. 3-21
3-5 Section 36E and 36W Tanks (4.0 MG Each) – 650 Zone Group…… 3-22
3-6 297 Tank (2.25 MG) – 297 Zone Group……..3-23
3-7 Well 12 Tank (0.60 MG) – Cascade View Zone Group……. 3-26
3-8 Well 13R Tank (0.28 MG) – Cascade View Zone Group…….. 3-27
3-9 2037 Peak Hour Pressure – Plateau Zone…… 3-35
3-10 2037 Peak Hour Pressure – Cascade View Zone…… 3-36
3-11 Fire Flow Targets…… 3-40
3-12 2037 Fire Flow Deficiencies – Plateau Zone…… 3-41
3-13 Fire Flow Improvements – Plateau Zone…… 3-42
3-14 2037 Fire Flow Deficiencies – Cascade View Zone…… 3-45
3-15 Fire Flow Improvements – Cascade View Zone…… 3-46
3-16 Redundancy Projects – Plateau Zone……3-50
3-17 Redundancy Projects – Cascade View Zone……3-51

3. System Analysis

This chapter provides an evaluation of the water system's ability to meet current and projected water system needs. Source and storage capacity analyses are presented, followed by an evaluation of the distribution system piping network. System deficiencies are noted in this chapter, while planned system improvements are discussed in detail in Chapter 8 (Capital Plan).

3.1 Source Capacity Analysis

3.1.1 Design Criteria

According to DOH planning requirements, sources of supply must be sufficient to meet maximum day demands (MDD). The source capacity analysis presented below examines the ability of the District's existing sources of supply to meet this requirement. The analysis is conducted by comparing the District's water demand forecast, presented in Chapter 2, with current source capacities. All evaluations assume that all normally-operating sources are capable of functioning 24-hours per day, consistent with DOH requirements. As discussed following Tables 3-2 and 3-3 below, the system was also evaluated under the condition that all sources were operated only 20 hours a day.

3.1.2 Source Capacity Evaluation

3.1.2.1 Plateau Zone

Table 3-1 summarizes the comparison of the Plateau Zone's total available source capacity, based on current operating conditions during summer months, with current and future system-wide demands. Current District well capacities, in conjunction with supply as needed from the South Regional Connection, provide adequate supply through the 20-year planning period, through 2037.

Specific groups of pressure zones within the Plateau Zone receive water from common sources (meaning, although source water may initially enter one zone, it is then transferred either through pumping or PRVs to additional zones). Table 3-2 summarizes the source capacity analysis for three such pressure zone groups (denoted here as the 700, 650 and 297 Zone groups). Additional detail regarding which pressure zones are located within each group is provided in Section 3.2.2, which provides a more detailed and complex storage capacity analyses for the zone groups.

For source analysis purposes, the booster pump supply required to feed the higher zone for the 2037 demand was determined. This same level of supply was applied to each of the earlier years' evaluations. Within the booster station the supply was allocated by relative capacity of the pumps designated for primary use in that station. Back-up pumps were not included in the evaluation.

The available source capacities in each pressure zone group are sufficient to meet current and projected 20-year demands. The same holds true for each of the District's individual booster pump stations. No supply deficiencies are identified at these stations.

Table 3-1
Evaluation of Source Adequacy for Plateau Zone
(Summer Months, Peak Season)[1]

	Year		
	2016	**2027**	**2037**
Projected ERUs and Demand[2]			
ERUs	22,550	26,384	26,835
Average Day Demand (MGD)	4.92	5.80	5.90
Maximum Day Demand (MGD)	10.5	12.3	12.6
Available Existing District Sources (MGD)[3]			
Well 1R	0.72	0.72	0.72
Well 2.2	0.72	0.72	0.72
Wells 4R+11.2 Combined	4.03	4.03	4.03
Well 8	4.61	4.61	4.61
Well 10	0.72	0.72	0.72
Total Available Source (MGD)	10.8	10.8	10.8
District Source Surplus/(Deficiency) (MGD)	**0.33**	**(1.54)**	**(1.76)**
Additional Available Sources			
South Regional Connection (Cascade) (MGD)[4]	10	10	10
Total Available Source (with additional sources, MGD)	20.8	20.8	20.8
Total Source Surplus/(Deficiency) (MGD)	**10.3**	**8.5**	**8.2**

Displayed values rounded in some instances.

1. Peak Season is defined as June through September
2. Projected demands as presented in Chapter 2.
3. Only those sources that are normally operated during summer months (when MDD conditions exist) are considered in this analysis.
4. 10 MGD is available through the South Regional Connection, while maintaining a pressure of 100 psi at the point of delivery.

Table 3-2
Evaluation of Source Adequacy for Plateau Zone Groups
(Summer Months, Peak Season)[1]

	Year		
	2016	**2027**	**2037**
700 Pressure Zone Group			
Projected ERUs and Demand[2]			
ERUs	3,784	4,059	4,114
Average Day Demand (MGD)	0.83	0.89	0.90
Maximum Day Demand (MGD)	1.76	1.90	1.93
Available Existing District Sources (MGD)[3]			
Wells 4R+11.2 combined	1.93	1.93	1.93
Supply from Section 36 tanks[4]			
Well 4 Booster Pump 1 (60 hp)	0.00	0.00	0.00
Total Available Source (MGD)	1.93	1.93	1.93
700 Pressure Zone Group Source Surplus/(Deficiency) (MGD)	**0.17**	**0.03**	**0.00**
650 Pressure Zone Group			
Projected ERUs and Demand[2]			
ERUs	17,195	20,584	20,876
Average Day Demand (MGD)	3.75	4.52	4.59
Maximum Day Demand (MGD)	7.98	9.63	9.77
Available Existing District Sources (MGD)[3]			
Well 1R	0.72	0.72	0.72
Well 2.2	0.72	0.72	0.72
Well 10	0.72	0.72	0.72
Wells 4R+11.2 combined	2.11	2.11	2.11
Supply from 297 Pressure Zone Group[4]			
43RD_150HP Booster Pump	0.95	0.95	0.95
43RD_250HP Booster Pump	1.70	1.70	1.70
297_150HP Booster Pump	0.95	0.95	0.95
297_250HP Booster Pump	1.90	1.90	1.90
Less Demand for Well 4 Pumps			
Well 4 Booster Pump 1 (60 hp)	0.00	0.00	0.00
Total Available Source (MGD)	9.77	9.77	9.77
650 Pressure Zone Group Source Surplus/(Deficiency) (MGD)	**1.78**	**0.14**	**0.00**

Table 3-2 (cont.)
Evaluation of Source Adequacy for Plateau Zone Groups
(Summer Months, Peak Season)[1]

	Year		
	2016	**2027**	**2037**
297 Pressure Zone Group			
Projected ERUs and Demand[2]			
ERUs	1,572	1,741	1,846
Average Day Demand (MGD)	0.34	0.38	0.41
Maximum Day Demand (MGD)	0.73	0.81	0.86
Available Existing District Sources (MGD)[3]			
Well 8	4.61	4.61	4.61
South Regional Connection (Cascade) (MGD)	10.0	10.0	10.0
Less Demand for 650 supply pumps			
43rd Booster Pumps (2)	(2.65)	(2.65)	(2.65)
297 Booster Pumps (2)	(2.85)	(2.85)	(2.85)
Total Available Source (MGD)	9.1	9.1	9.1
297 Pressure Zone Group Source Surplus/(Deficiency) (MGD)	**8.4**	**8.3**	**8.2**

Displayed values rounded in some instances.
1. Peak Season is defined as June through September
2. Projected demands as presented in Chapter 2.
3. Only those sources that are normally operated during summer months (when MDD conditions exist) are considered in this analysis.
4. Supply from lower zone booster pump station determined as the minimum necessary to meet forecast demand for year 2037. Supply per pump is allocated by relative capacity of each primary pump in a station. Well 4 Pump 2 & 3 and the 450 hp pump in the 297 pump station are not included in this analysis due to their designation as backup pumps. 43rd pump station total capacity is 2,600 gpm and 297 pump station total capacity is 2,800 gpm, each with respective backup pumps not in service.

The analysis summarized in Table 3-2 assumes that well sources within a pressure zone are fully utilized first, then supplemented as necessary from booster pump station supply from a lower zone, and for the 297 Pressure Zone Group, the interties were the last source to be utilized. The analysis was repeated (but not presented in the Plan) assuming all sources were limited to 20 hours of operation. The same conclusion was reached, although the surplus decreases from 8.2 mgd to 4.8 mgd, for the 297 Pressure Zone Group.

3.1.2.2 Cascade View Zone

The Cascade View Zone has two primary source wells rated at 200 gpm for Well 12R and 260 gpm for Well 13R. In addition, the connection to Cascade's regional supply at NE 80th Street and Redmond Ridge Drive NE provides 200 gpm per the terms of the Wheeling Agreement with the City of Redmond. The connection can provide 400 gpm for emergencies. The source adequacy evaluation, summarized in Table 3-3, indicates that this capacity is sufficient in meeting current and future needs.

Table 3-3
Evaluation of Source Adequacy for Cascade View Zone

	Year		
	2016	**2027**	**2037**
Projected ERUs and Demand[1]			
ERUs	784	841	882
Average Day Demand (MGD)	0.18	0.19	0.20
Maximum Day Demand (MGD)	0.38	0.41	0.43
Available Existing District Sources (MGD)[2]			
Well 12R	0.29	0.29	0.29
Well 13R	0.37	0.37	0.37
Total Available Source (MGD)	0.66	0.66	0.66
District Source Surplus/(Deficiency) (MGD)	**0.28**	**0.26**	**0.24**
Additional Available Sources			
North Regional Connection (Cascade)[3]	0.29	0.29	0.29
Total Source Surplus/(Deficiency) (MGD)	**0.57**	**0.54**	**0.52**

Displayed values rounded in some instances.
1. Projected demands as presented in Chapter 2.
2. Only those sources that are normally operated during summer months (when MDD conditions exist) are considered in this analysis.
3. Capacity based upon a flow rate of 200 gpm.

The analysis summarized in Table 3-3 assumes that well sources are fully utilized first. They are adequate for the planning period as noted, but the available capacity for the North Regional Connection is added as surplus capacity. The analysis was repeated (but not presented in the Plan) assuming all sources were limited to 20 hours of operation. The same conclusion was reached, although the surplus for District Source decreases from 0.24 mgd to 0.13 mgd and for Total Source from 0.52 mgd to 0.37 mgd.

3.2 Storage Capacity Analysis

3.2.1 Design Criteria

According to DOH requirements, water system storage volume is comprised of five separate components:

- Operating volume
- Equalizing volume
- Fire flow volume
- Standby volume
- Dead volume

These required volume components are illustrated in Figure 3-1. All storage components are described in more detail below.

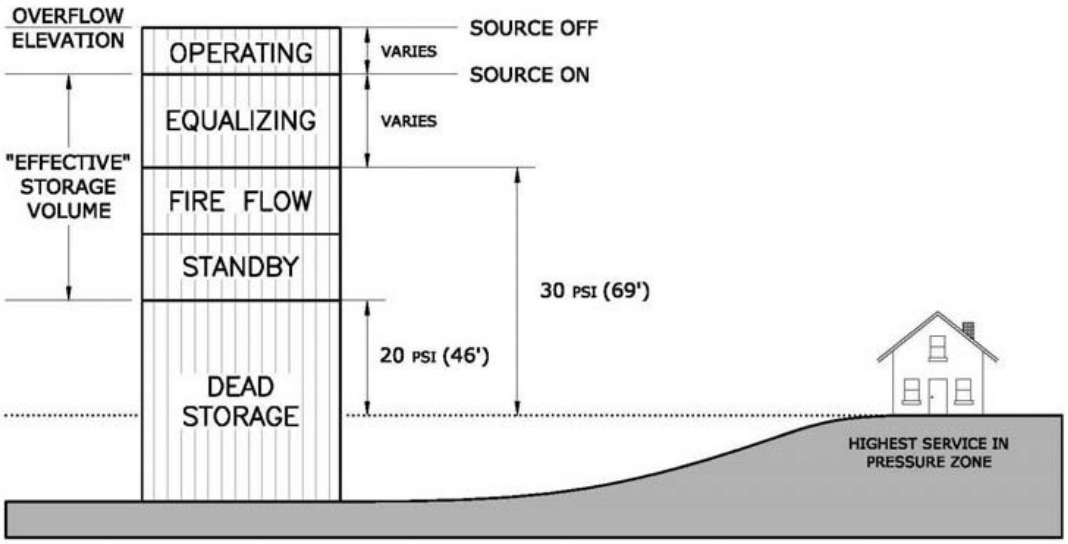

Figure 3-1
STORAGE COMPONENTS

3.2.1.1 Operating and Dead Storage Volumes

Operating volume is the water that lies between low and high-water storage elevations set by District operations staff to control system pumps and flow control valves. Dead volume is the volume at the bottom of the tank that cannot be used because it is physically too low to provide sufficient pressures. Operational and dead volumes are subtracted from total storage to determine the effective storage available for equalizing, standby, and fire flow.

3.2.1.2 Equalizing Volume

Equalizing volume is the total volume needed to moderate daily fluctuations in diurnal demands during periods when the demand exceeds the capacity of the supply system. Equalizing volume requirements are greatest on the day of peak demand. Operation of a properly balanced system results in replenishment of storage facilities during times of day when the demand curve is below the capacity of the supply system, and depletion of storage facilities when the demand exceeds the supply capacity. The equalizing volume of a storage tank must be located at an elevation that provides a minimum pressure of 30 pounds per square inch (psi) to all customers served by the tank.

3.2.1.3 Fire Flow Volume

The required fire flow volume for analysis of adequacy of storage volumes in a given pressure zone is calculated as the required fire flow multiplied by the required duration. The fire flow rate and duration are derived from review of Appendix B of the International Fire Code. These requirements are discussed further in Chapter 7. The maximum fire flow volume considered in this analysis for the Plateau Zone is one fire with a demand of 4,000 gpm for four hours. The maximum fire flow volume in the Cascade View Zone is 1,000 gpm for two hours[1]. The entire fire flow volume is allocated to each pressure zone group, for this analysis. The fire flow criteria for the distribution system analysis is discussed in Section 3.3.7.

The fire flow volume of a storage tank must be located at an elevation that provides a minimum pressure of 20 psi to all customers served by the tank. DOH allows for the "nesting" of standby and fire flow storage, with the larger used for the storage volume. However, as some fire authorities within the District's service area do not allow for nesting, the District provides the total of calculated standby and fire flow volumes.

3.2.1.4 Standby Volume

Standby volume is required to supply reasonable system demands during a foreseeable system emergency or outage. A key concept is that establishing standby volume involves planning for reasonable system outages – those that can be expected to occur under normal operating conditions, such as a pipeline failure, power outage or valve failure. Major system emergencies, such as those created by an earthquake, are intended to be covered by emergency system operations planning, since construction of sufficient reserve volume to accommodate sustained system demands under emergency conditions is not economically feasible.

DOH has established guidelines for determining minimum required standby volume. This component is calculated as the greater of: two times the average day demand, less multi- source credit; or 200 gallons times the number of ERUs served by the

[1] Typically, the duration for 1,000 gpm is one hour but the District has historically planned for two hours of fire flow supply in this zone.

storage facility. The multi-source credit is applicable only for pressure zones that have multiple sources of supply and allows the required standby storage volume in such instances to be reduced. The credit assumes the largest source of supply is out of service; thus, it is calculated as the total source available to a particular pressure zone, or zone combination, less the capacity of the largest source. No credit is allowed for zones having only one source of supply.

3.2.2 Storage Capacity Evaluation

The storage capacity evaluation is based upon two primary calculations:

1. Comparison of available versus required storage located at an elevation that provides at least 30 psi to the highest customer in the zone. This evaluates the ability of existing storage facilities to provide required operational and equalizing storage volumes under current and future conditions.

2. Comparison of available versus required storage located at an elevation that provides at least 20 psi to the highest customer in the zone. This evaluates the ability of existing storage facilities to provide required operational, equalizing, standby, and fire flow storage volumes under current and future conditions.

These two calculations are conducted for the Plateau Zone and Cascade View Zone independently. In addition, there is a further subdivision within the Plateau Zone of analysis on select pressure zones, or combinations of pressure zones, served by the system's reservoirs.

Actual storage volumes are presented in the tables and supporting analysis, whereas nominal volumes (typically in million gallons) are used to reference each storage facility. The total nominal capacity is three percent lower than actual capacity.

Based upon the locations of the District's reservoirs, and the interconnectedness of the various pressure zones via pressure reducing valves (PRVs), the following pressure zones and pressure zone groupings were evaluated in terms of storage capacity:

- ***Plateau Zone (All Tanks and All Pressure Zones).*** This analysis considers all reservoir storage available throughout the Plateau Zone and evaluates its ability to meet needs throughout all pressure zones within the Plateau Zone. The Plateau Zone has a nominal storage capacity of 21,850,000 gallons with an actual storage capacity of 22,521,454 gallons.

- ***Plateau Zone (700 Zone Storage).*** The 3 million-gallon (MG) tank serves this pressure zone and the Northeast Sammamish Sewer and Water District. The storage is split between the water districts but in the storage analysis, the full volume[2] is considered available for use in the Plateau Zone. Through PRVs,

[2] By an agreement with Northwest Sammamish Sewer and Water District, the 3 MG tank is shared between the two utilities. In this analysis, the entire tank volume is considered available because the operational

the 540, 550, 590, 400 BROD, 475 SAMSUN, and 700 SH pressure zones are hydraulically connected to the 700 Zone and are served by the 3 MG tank. The Section 36 tanks are in the 550 Zone, and directly connect to the 550 Zone. However, for these analyses, they are considered part of the 650 Zone storage. The 700 Zone has a nominal storage volume of 3,000,000 gallons, and an actual storage capacity of 3,059,138 gallons.

- ***Plateau Zone (650 Zone Storage).*** The 7 MG tank, 2 MG tank, and the two Section 36 tanks[3] serve the 650 Zone. Through PRVs and booster pumps, the 310, 375, 390, 400 OV, 400 WAV, 450, 450 WAK, 466, 475, 475 PH, 499, 510, 560, 566, 550 ALD, 700 OV and 700 BC pressure zones are hydraulically connected to the 650 Zone. The 650 Zone has a nominal storage capacity of 16,600,000 gallons, and an actual storage volume of 17,229,990 gallons.

- ***Plateau Zone (297 Zone Storage).*** The 297 tank provides the primary storage for the 297 Zone. There are PRVs that supply water from the 650 Zone, but the purpose of this scenario is to consider the situation where all the required storage is provided by the 297 Tank. The 297 zone has a nominal storage volume of 2,250,000 gallons, and an actual storage capacity of 2,232,416 gallons.

- ***Cascade View Zone (All Tanks and All Pressure Zones).*** The Well 12 and Well 13 tanks serve the 730 Zone, which in turn provides water via PRVs to the 650 CV, 642, 590 CV, and 550 CV pressure zones. The Cascade View Zone has a nominal storage volume of 875,000 gallons, and an actual storage volume of 906,948 gallons.

The results of the storage capacity analysis are presented below.

3.2.2.1 Plateau Zone Summary

Table 3-4 provides a summary of the storage capacity analysis for the Plateau Zone. From a system-wide perspective, there is sufficient storage in the Plateau Zone to meet current and future projected needs. The total unallocated capacity by the 20-year planning horizon is approximately 9.1 MG. This is the net unallocated volume considering the available volume of 10.7 MG at an elevation that provides at least 30 psi to all customers, and a deficiency of approximately 1.55 MG in the range of storage that provides between 20 and 30 psi to all customers.

---

storage drawdown is based on a joint operational level established by both utilities, and because the entire tank volume is fully available to either utility for emergency purposes, such as for fire suppression or standby storage.

[3] Storage volume from the Section 36 tanks (which are located in the 550 Zone) is only available to the 650 Zone via the Section 36 Booster Pump Station.

Table 3-4
Summary of Plateau Zone Storage Capacity Analysis

	Year		
	2016	**2027**	**2037**
Projected ERUs and Demand[1]			
ERUs[2]	22,550	26,384	26,835
Average Day Demand (MGD)	4.92	5.80	5.90
Maximum Day Demand (MGD)	10.48	12.35	12.57
Peak Hour Demand (gpm)	11,384	13,260	13,486
Total Available Source (MGD)[3]	20.8	20.8	20.8
Largest Source (MGD)	10.0	10.0	10.0
Total Source w/ Multi-Source Credit (MGD)[4]	10.8	10.8	10.8
Required Storage Calculations			
Operational Storage (MG)[5]	2.73	2.73	2.73
Equalizing Storage (MG)[6]	0.00	0.00	0.00
Standby Storage (MG)[7]	4.51	5.28	5.37
Fire Flow Storage (MG)[8]	0.96	0.96	0.96
Required Storage			
Greater than 30 psi at highest meter (MG)[9]	2.73	2.73	2.73
Greater than 20 psi at highest meter (MG)[10]	5.47	6.24	6.33
Existing Storage Greater Than 30 psi (MG)			
7-MG Tank	4.00	4.00	4.00
2-MG Tank	0.82	0.82	0.82
Section 36-E	3.31	3.31	3.31
Section 36-W	3.31	3.31	3.31
297 Tank	1.33	1.33	1.33
3-MG Tank	0.64	0.64	0.64
Total Existing Storage at 30 psi (MG)	13.4	13.4	13.4
Unallocated/(Deficiency) at 30 psi (MG)	**10.7**	**10.7**	**10.7**

Table 3-4 (cont.)
Summary of Plateau Zone Storage Capacity Analysis

	Year		
	2016	**2027**	**2037**
Existing Storage Between 20 and 30 psi (MG)			
7-MG Tank	2.66	2.66	2.66
2-MG Tank	0.57	0.57	0.57
Section 36-E	0.05	0.05	0.05
Section 36-W	0.05	0.05	0.05
297 Tank	0.84	0.84	0.84
3-MG Tank	0.61	0.61	0.61
Total Existing Storage at 20 psi (MG)	4.78	4.78	4.78
Unallocated/(Deficiency) at 20 psi (MG)	**(0.69)**	**(1.46)**	**(1.55)**
Total Unallocated/(Deficiency) at 30 psi (MG) Net of Deficiency at 20 psi	**10.0**	**9.2**	**9.1**

Displayed values rounded in some instances.

1. Projected demands as presented in Chapter 2.
2. Number of ERUs are based on Average Day Demand divided by 204 gpd per ERU.
3. See Table 3-2 for source information.
4. Multi-source credit assumes largest source is out of service (in this case, South Regional Connection at 6,944 GPM).
5. Required Operational Storage is based on typical operational drawdown levels (7- MG Tank - 10.4', 2-MG Tank - 8.9',Section 36 Tanks - 2.3', 297 Tank - 4.6', 3-MG Tank - 11.6')
6. Required equalization storage is calculated as [PHD - Total Available Source) * 150 minutes] with a minimum value of 0.

   PHD: (Maximum Day Demand per ERU / 1440) * [(C) * (N) + F] +18

   (C & F values obtained from Table 5-1 in DOH Dec 2009 WSDM)
7. Required standby storage for existing source = greater of (2*ADD - Source w/Multi-source credit) or 200 gallons per ERU.
8. Required fire flow storage = 4,000 gpm x 4 hours.
9. Total required storage greater than 30 psi is equal to the total operational and equalizing storage.
10. Total required storage greater than 20 psi is equal to the total of operation, equalizing, standby and fire flow storage. For analysis purposes, volume at or greater than 20 psi represents the volume between 20 and 30 psi, for standby and fire flow storage purposes.

700 Zone Group

Table 3-5 shows the results of the storage capacity analysis for the 3 MG tank in the 700 Zone. The following zones are also served by the tank via PRVs: 540, 550, 590, 700, 400 BROD, 475 SAMSUN, and 700 SH. There is a net deficiency for storage above 30 psi, due to insufficient capacity for the full planning period in the 20 to 30 psi range. Additional storage can be provided from the Section 36 Tanks to cover the deficiency. Key findings illustrated in the table include:

- The 30 psi unallocated storage volume is 0.33 MG in 2037. This is based on a highest customer elevation of 610 feet.
- The 20 psi storage deficiency in 2037 is 1.17 MG. The net deficiency of 0.84 MG remaining in this zone can be supplemented with available storage associated with the 650 Zone through use of the Section 36 tanks in the 550 Zone. Water stored in the Section 36 tanks is isolated from other water entering the 650 Zone and contains no fluoride and minimal chlorine. It is directly available to the 550 Zone (without the introduction of fluoridated water). The 550 Zone includes approximately 50% of the demand included in the 700 Zone storage area.

650 Zone Group

Table 3-6 shows the results of the storage capacity analysis for the reservoirs in the 650 Zone which provide storage for the following zones: 310, 375, 390, 400 OV, 400 WAV, 450 WAK, 450, 466, 475, 475 PH, 499, 510, 550 ALD, 560, 566, 650, 700 OV and 700 BC. The 650 Zone is the largest pressure zone in the system and has numerous other zones connected hydraulically via PRVs or pump stations. The storage in the 2 MG, 7 MG, and two Section 36 Tanks are sufficient to meet current and future projected demands. Key findings illustrated in the table include:

- The 30 psi unallocated storage volume is 8.86 MG in 2037. This is based on a highest customer elevation of 550 feet in the 650 Zone and 460 feet in the 550 Zone.
- The 20 psi storage deficiency is 1.81 MG in 2037. This deficiency is compensated for by using a portion of the significant available 30 psi storage. Allocation of 0.84 MG to address the 700 Zone net deficiency still leaves a net unallocated volume of over 6 MG in this zone.

297 Zone Group

Table 3-7 provides the results of the storage capacity analysis for the 297 Zone. The 297 tank has sufficient capacity to fully meet the needs of this pressure zone beyond 2037. Key findings illustrated in the table include:

- The 30 psi unallocated storage volume is 1.06 MG in 2037. This is predicated on the highest customer elevation of approximately 205 feet. There are a few nodes in the hydraulic model located at higher elevations than this; however, few customers are served at these high elevations in the 297 Zone.
- The 20 psi storage deficiency is 0.49 MG in 2037. This is more than fully addressed by the unallocated volume available at 30 psi.

Table 3-5
Evaluation of Storage Adequacy for 700 Zone

	Year		
	2016	**2027**	**2037**
Projected ERUs and Demand[1]			
ERUs[2]	3,784	4,059	4,114
Average Day Demand (MGD)	0.83	0.89	0.90
Maximum Day Demand (MGD)	1.76	1.90	1.93
Peak Hour Demand (gpm)	1,909	2,038	2,065
Total Available PHD Source (gpm)[3]	2,065	2,065	2,065
Total Available ADD Source (MGD)[4]	7.27	7.27	7.27
Largest ADD Source (MGD)	4.03	4.03	4.03
Total ADD Source w/ Multi-Source Credit (MGD)[5]	3.24	3.24	3.24
Required Storage Calculations			
Operational Storage (MG)[6]	0.31	0.31	0.31
Equalizing Storage (MG)[7]	0.00	0.00	0.00
Standby Storage (MG)[8]	0.76	0.81	0.82
Fire Flow Storage (MG)[9]	0.96	0.96	0.96
Required Storage			
Greater than 30 psi at highest meter (MG)[10]	0.31	0.31	0.31
Greater than 20 psi at highest meter (MG)[11]	1.72	1.77	1.78
Existing Storage Greater Than 30 psi (MG)			
3-MG Tank	0.64	0.64	0.64
Total Existing Storage at 30 psi (MG)	0.64	0.64	0.64
Unallocated/(Deficiency) at 30 psi (MG)	**0.33**	**0.33**	**0.33**
Existing Storage Greater Than 20 psi (MG)			
3-MG Tank	0.61	0.61	0.61
Total Existing Storage at 20 psi (MG)	0.61	0.61	0.61
Unallocated/(Deficiency) at 20 psi (MG)	**(1.11)**	**(1.16)**	**(1.17)**
Total Unallocated/(Deficiency) at 30 psi (MG) Net of Deficiency at 20 psi	**(0.78)**	**(0.83)**	**(0.84)**

Displayed values rounded in some instances.

1. Projected demands as presented in Chapter 2.
2. Number of ERUs are based on Average Day Demand divided by 204 gpd per ERU.
3. Source available for PHD condition. Supply from lower zone booster pump stations determined as the minimum necessary to meet forecast PHD for year 2037. Supply per pump is allocated by relative capacity of each pump in a station.
4. Source available for ADD/Standby condition. Supply from lower zone booster pump stations determined by pump capacity.
5. Multi-source credit assumes largest source is out of service (in this case, combined Wells 11.2 and 4R with 2800 GPM).

6. Required Operational Storage is based on typical operational drawdown levels (3-MG Tank - 11.6').

7. Required equalization storage is calculated as [PHD - Total Available Source) * 150 minutes] with a minimum value of 0.

PHD: (Maximum Day Demand per ERU / 1440) * [(C) * (N) + F] +18

(C & F values obtained from Table 5-1 in DOH Dec 2009 WSDM)

8. Required standby storage for existing source = greater of (2*ADD - Multi-source credit) or 200 gallons per ERU.

9. Required fire flow storage = 4,000 gpm x 4 hours.

10. Total required storage greater than 30 psi is equal to the total operational and equalizing storage.

11. Total required storage greater than 20 psi is equal to the total of operation, equalizing, standby and fire flow storage. For analysis purposes, volume at or greater than 20 psi represents the volume between 20 and 30 psi, for standby and fire flow storage purposes.

Table 3-6
Evaluation of Storage Adequacy for 650 Zone

	Year		
	2016	**2027**	**2037**
Projected ERUs and Demand[1]			
ERUs[2]	17,195	20,584	20,876
Average Day Demand (MGD)	3.75	4.52	4.59
Maximum Day Demand (MGD)	7.98	9.63	9.77
Peak Hour Demand (gpm)	8,673	10,336	10,482
Total Available PHD Source (gpm)[3]	7,635	7,635	7,635
Total Available ADD Source (MGD)[4]	13.97	13.97	13.97
Largest ADD Source (MGD)	4.03	4.03	4.03
Total Source w/ Multi-Source Credit (MGD)[5]	9.94	9.94	9.94
Required Storage Calculations			
Operational Storage (MG)[6]	2.15	2.15	2.15
Equalizing Storage (MG)[7]	0.16	0.41	0.43
Standby Storage (MG)[8]	3.44	4.12	4.18
Fire Flow Storage (MG)[9]	0.96	0.96	0.96
Required Storage			
Greater than 30 psi at highest meter (MG)[10]	2.31	2.56	2.58
Greater than 20 psi at highest meter (MG)[11]	4.40	5.08	5.14
Existing Storage Greater Than 30 psi (MG)			
7-MG Tank	4.00	4.00	4.00
2-MG Tank	0.82	0.82	0.82
Section 36-E	3.31	3.31	3.31
Section 36-W	3.31	3.31	3.31
Total Existing Storage at 30 psi (mg)	11.44	11.44	11.44
Unallocated/(Deficiency) at 30 psi (MG)	**9.13**	**8.88**	**8.86**
Existing Storage Greater Than 20 psi (MG)			
7-MG Tank	2.66	2.66	2.66
2-MG Tank	0.57	0.57	0.57
Section 36-E	0.05	0.05	0.05
Section 36-W	0.05	0.05	0.05
Total Existing Storage at 20 psi (MG)	3.3	3.3	3.3
Unallocated/(Deficiency) at 20 psi (MG)	**(1.07)**	**(1.75)**	**(1.81)**
Total Unallocated/(Deficiency) at 30 psi (MG) Net of Deficiency at 20 psi	**8.06**	**7.13**	**7.05**

Displayed values rounded in some instances.

1. Projected demands as presented in Chapter 2.

2. Number of ERUs are based on Average Day Demand divided by 204 gpd per ERU.
3. Source available for PHD condition. Supply from lower zone booster pump stations determined as the minimum necessary to meet forecast PHD for year 2037. Supply per pump is allocated by relative capacity of each pump in a station.
4. Source available for ADD/Standby condition. Supply from lower zone booster pump stations determined by pump capacity.
5. Multi-source credit assumes largest source is out of service (in this case, combined Wells 11.2 and 4R with 2800 GPM).
6. Required Operational Storage is based on typical operational drawdown levels (7-MG Tank - 10.4', 2-MG Tank - 8.9', Section 36 Tanks - 2.3' each)
7. Required equalization storage is calculated as [PHD - Total Available Source) * 150 minutes] with a minimum value of 0.

   PHD: (Maximum Day Demand per ERU / 1440) * [(C) * (N) + F] +18
   (C & F values obtained from Table 5-1 in DOH Dec 2009 WSDM)
8. Required standby storage for existing source = greater of (2*ADD - Multi-source credit) or 200 gallons per ERU.
9. Required fire flow storage = 4,000 gpm x 4 hours.
10. Total required storage greater than 30 psi is equal to the total operational and equalizing storage.
11. Total required storage greater than 20 psi is equal to the total of operation, equalizing, standby and fire flow storage. For analysis purposes, volume at or greater than 20 psi represents the volume between 20 and 30 psi, for standby and fire flow storage purposes.

Table 3-7
Evaluation of Storage Adequacy for 297 Zone

	Year		
	2016	**2027**	**2037**
Projected ERUs and Demand[1]			
ERUs[2]	1,572	1,741	1,846
Average Day Demand (MGD)	0.34	0.38	0.41
Maximum Day Demand (MGD)	0.73	0.81	0.86
Peak Hour Demand (gpm)	793	874	927
Total Available PHD Source (gpm)[3]	10,144	10,144	10,144
Total Available ADD Source (MGD)[4]	14.6	14.6	14.6
Largest ADD Source (MGD)	10.0	10.0	10.0
Total Source w/ Multi-Source Credit (MGD)[5]	4.6	4.6	4.6
Required Storage Calculations			
Operational Storage (MG)[6]	0.27	0.27	0.27
Equalizing Storage (MG)[7]	0.00	0.00	0.00
Standby Storage (MG)[8]	0.31	0.35	0.37
Fire Flow Storage (MG)[9]	0.96	0.96	0.96
Required Storage			
Greater than 30 psi at highest meter (MG)[10]	0.27	0.27	0.27
Greater than 20 psi at highest meter (MG)[11]	1.27	1.31	1.33
Existing Storage Greater Than 30 psi (MG)			
297 Tank	1.33	1.33	1.33
Total Existing Storage at 30 psi (MG)	1.33	1.33	1.33
Unallocated/(Deficiency) at 30 psi (MG)	**1.06**	**1.06**	**1.06**
Existing Storage Greater Than 20 psi (MG)			
297 Tank	0.84	0.84	0.84
Total Existing Storage at 20 psi (MG)	0.84	0.84	0.84
Unallocated/(Deficiency) at 20 psi (MG)	**(0.43)**	**(0.47)**	**(0.49)**
Total Unallocated/(Deficiency) at 30 psi (MG) Net of Deficiency at 20 psi	**0.63**	**0.60**	**0.57**

Displayed values rounded in some instances.

1. Projected demands as presented in Chapter 2.
2. Number of ERUs are based on Average Day Demand divided by 204 gpd per ERU.
3. Source available for PHD condition. Supply from lower zone booster pump stations determined as the minimum necessary to meet forecast PHD for year 2037. Supply per pump is allocated by relative capacity of each pump in a station.
4. Source available for ADD/Standby condition. Supply from lower zone booster pump stations determined by pump capacity.

5. Multi-source credit assumes largest source is out of service (in this case, The South Regional Connection with 6,944 gpm).
6. Required Operational Storage is based on typical operational drawdown levels (297 Tank - 4.6').
7. Required equalization storage is calculated as [PHD - Total Available Source) * 150 minutes] with a minimum value of 0.
   PHD: (Maximum Day Demand per ERU / 1440) * [(C) * (N) + F] +18
   (C & F values obtained from Table 5-1 in DOH Dec 2009 WSDM)
8. Required standby storage for existing source = greater of (2*ADD - Multi-source credit) or 200 gallons per ERU.
9. Required fire flow storage = 4,000 gpm x 4 hours.
10. Total required storage greater than 30 psi is equal to the total operational and equalizing storage.
11. Total required storage greater than 20 psi is equal to the total of operation, equalizing, standby and fire flow storage. For analysis purposes, volume at or greater than 20 psi represents the volume between 20 and 30 psi, for standby and fire flow storage purposes.

Figures 3-2 through 3-6 present graphical summaries of the allocation of the storage volume for each tank in the Plateau Zone, for the demand forecast for 2016 and for 2037.

3.0 MG TANK - 700 ZONE GROUP

2016 DEMAND FORECAST

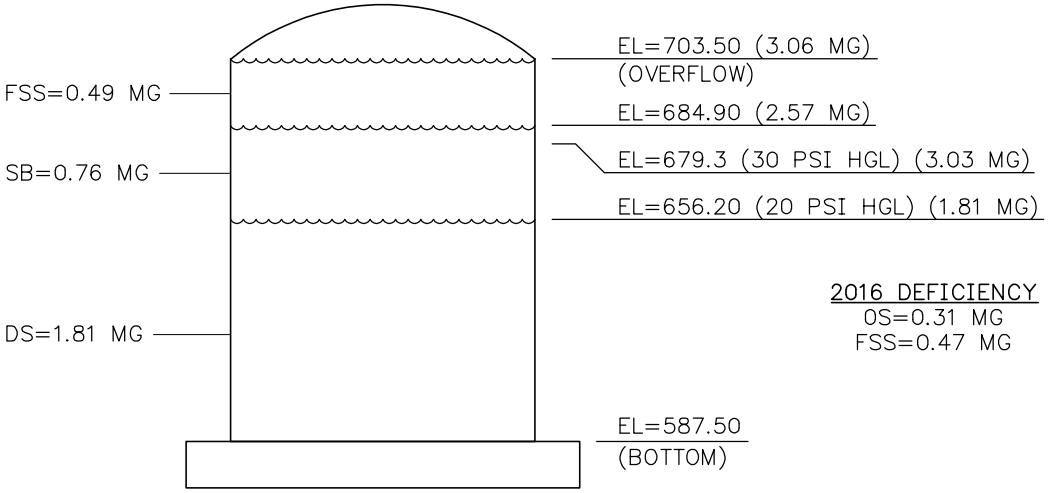

2037 DEMAND FORECAST

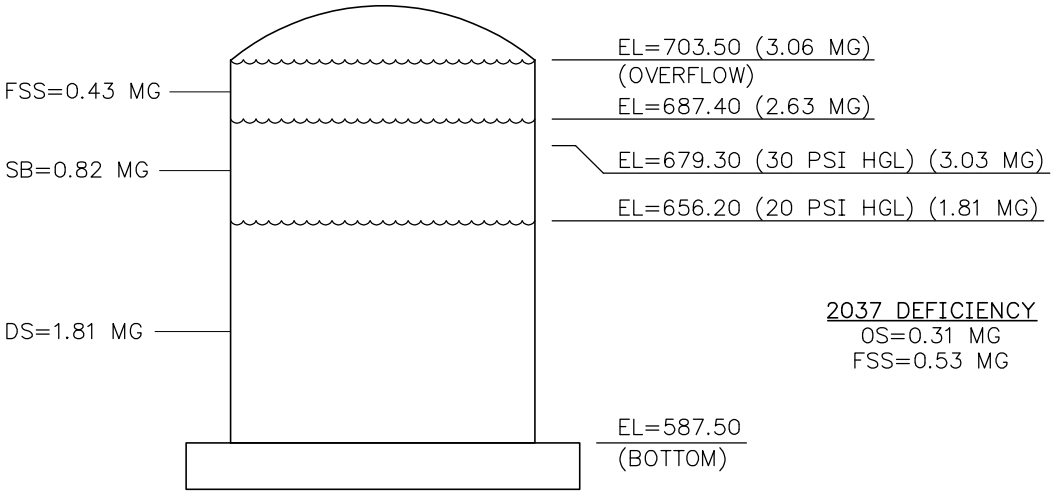

LEGEND:
OS=OPERATIONAL STORAGE
ES=EQUALIZING STORAGE
FSS=FIRE SUPRESSION STORAGE
SB=STANDBY STORAGE
DS=DEAD STORAGE

NOTES:
1. ALL ELEVATIONS ARE IN FEET
2. ALL VOLUMES ARE IN MILLION GALLONS (MG).
3. TOTALS MAY VARY DUE TO ROUNDING.
4. TANK HEIGHT=116'
5. ES=0 FOR THIS ZONE
6. 2037 DEFICIT 20+PSI=0.53 MG
7. 2037 DEFICIT 30+PSI=0.31 MG

CHS ENGINEERS

Sammamish Plateau Water

STORAGE UTILIZATION
3.0 MG TANK
FIGURE 3-2
Water Comprehensive Plan

7.0 MG TANK - 650 ZONE GROUP

2016 DEMAND FORECAST

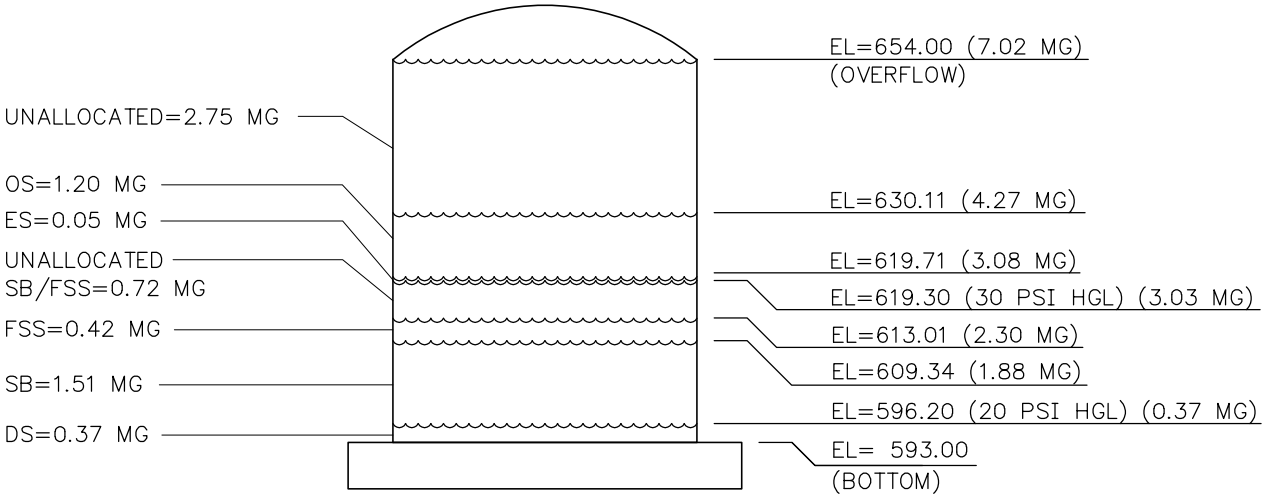

2037 DEMAND FORECAST

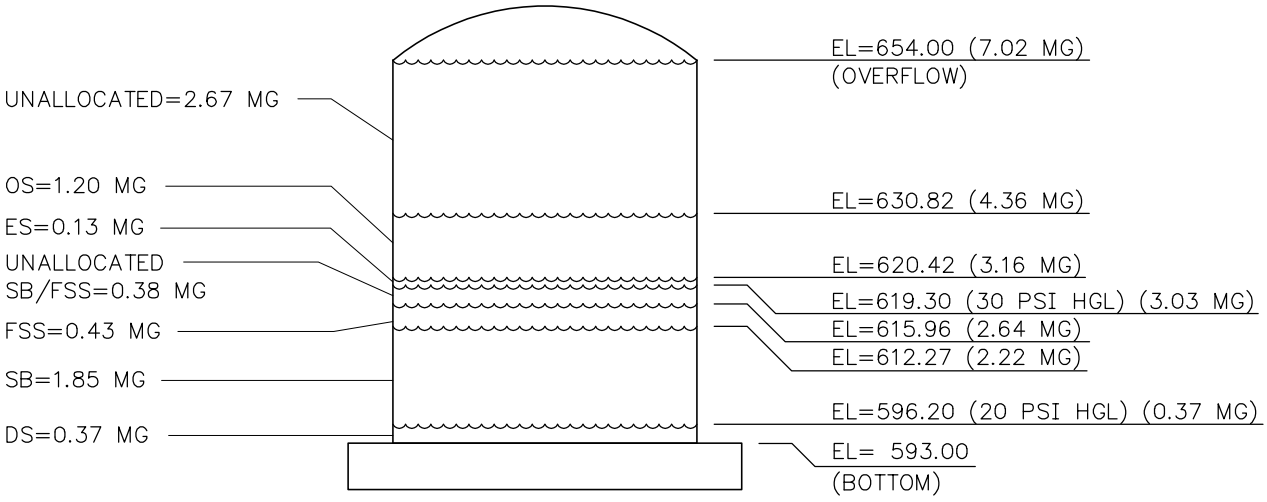

LEGEND:
OS=OPERATIONAL STORAGE
ES=EQUALIZING STORAGE
FSS=FIRE SUPRESSION STORAGE
SB=STANDBY STORAGE
DS=DEAD STORAGE

NOTES:
1. ALL ELEVATIONS ARE IN FEET
2. ALL VOLUMES ARE IN MILLION GALLONS (MG).
3. TOTALS MAY VARY DUE TO ROUNDING.
4. TANK HEIGHT=61'

CHS ENGINEERS

Sammamish Plateau Water

STORAGE UTILIZATION
7.0 MG TANK
FIGURE 3-3
Water Comprehensive Plan

2.0 MG TANK - 650 ZONE GROUP

2016 DEMAND FORECAST

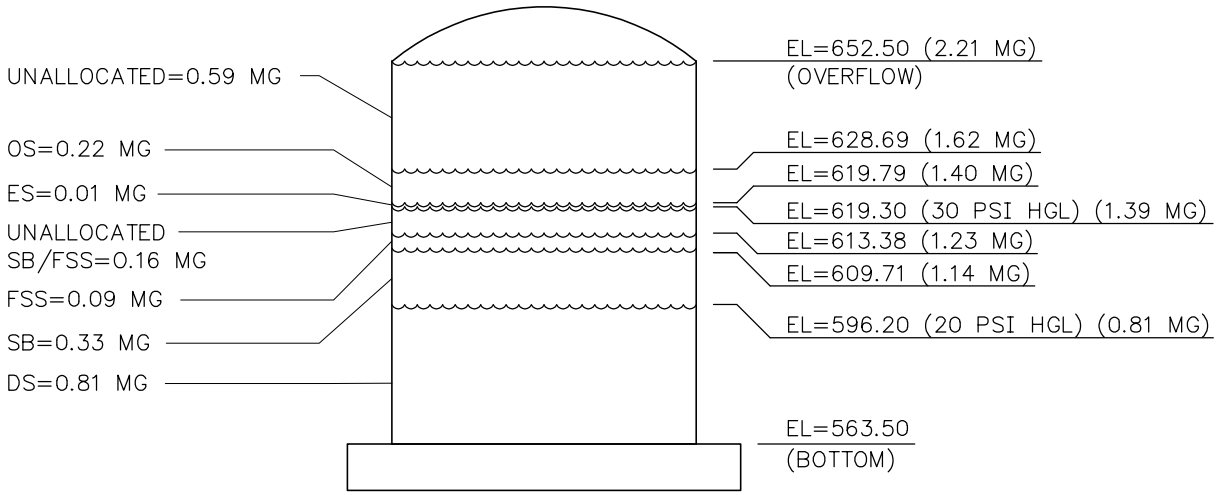

2037 DEMAND FORECAST

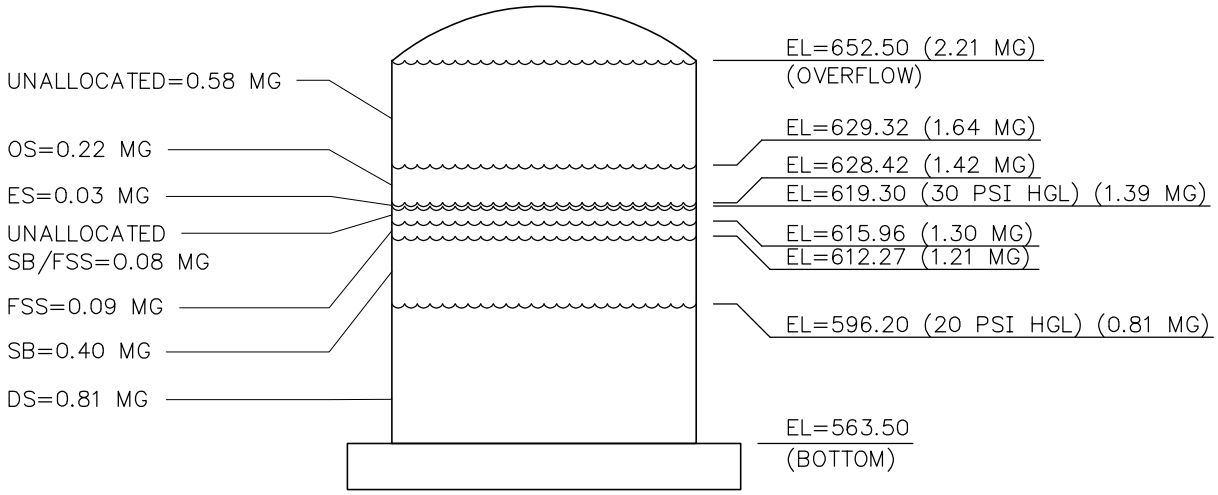

LEGEND:
OS=OPERATIONAL STORAGE
ES=EQUALIZING STORAGE
FSS=FIRE SUPRESSION STORAGE
SB=STANDBY STORAGE
DS=DEAD STORAGE

NOTES:
1. ALL ELEVATIONS ARE IN FEET
2. ALL VOLUMES ARE IN MILLION GALLONS (MG).
3. TOTALS MAY VARY DUE TO ROUNDING.
4. TANK HEIGHT=89'

CHS ENGINEERS

Sammamish Plateau Water

STORAGE UTILIZATION
2.0 MG TANK
FIGURE 3-4
Water Comprehensive Plan

SECTION 36E AND 36W TANKS - (4.0 MG EACH) 650 ZONE GROUP

NOTE:
THE VOLUMES SHOWN HERE ARE IDENTICAL IN BOTH 36E AND 36W

2016 DEMAND FORECAST

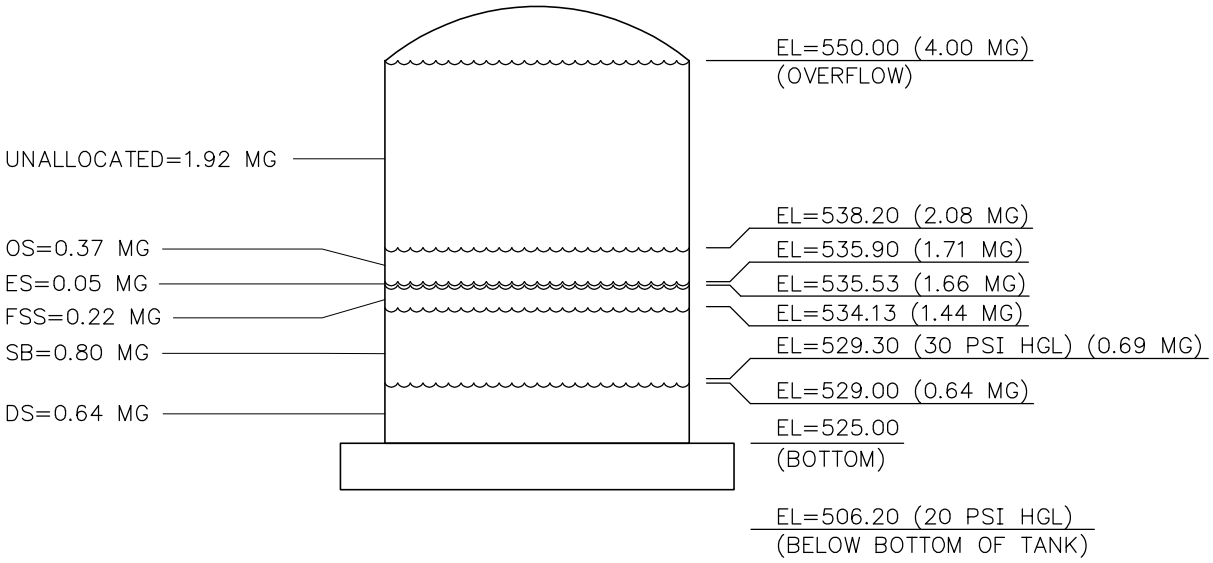

2037 DEMAND FORECAST

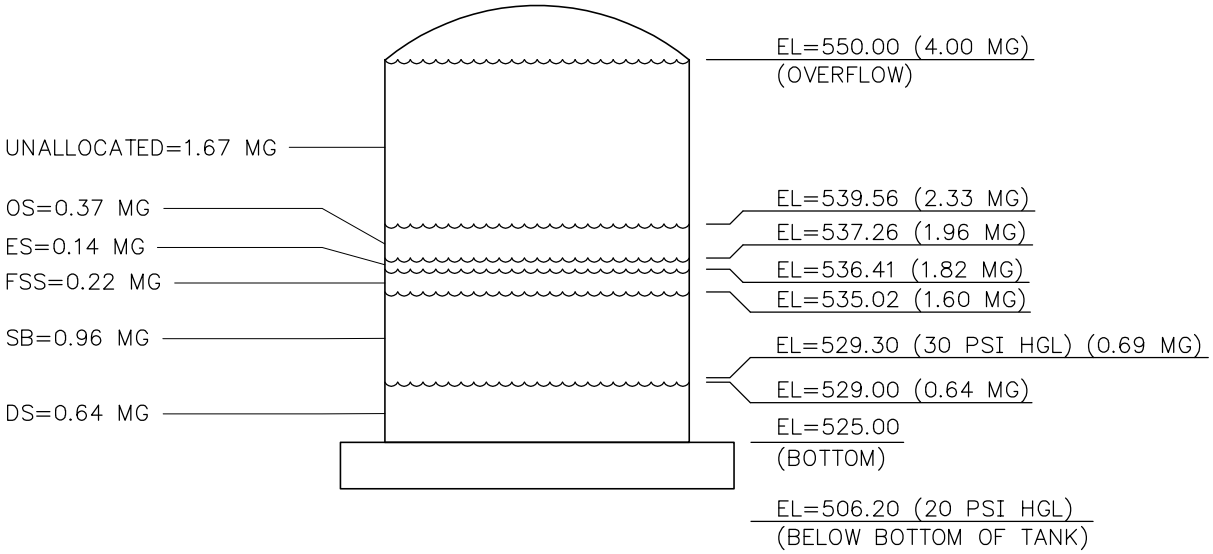

LEGEND:
OS=OPERATIONAL STORAGE
ES=EQUALIZING STORAGE
FSS=FIRE SUPRESSION STORAGE
SB=STANDBY STORAGE
DS=DEAD STORAGE

NOTES:
1. ALL ELEVATIONS ARE IN FEET
2. ALL VOLUMES ARE IN MILLION GALLONS (MG).
3. TOTALS MAY VARY DUE TO ROUNDING.
4. TANK HEIGHT=61'

CHS ENGINEERS

Sammamish Plateau Water

STORAGE UTILIZATION SECTION 36E AND 36W TANKS (4.0 MG EACH)

FIGURE 3-5

Water Comprehensive Plan

297 TANK (2.25 MG)
297 ZONE GROUP

2016 DEMAND FORECAST

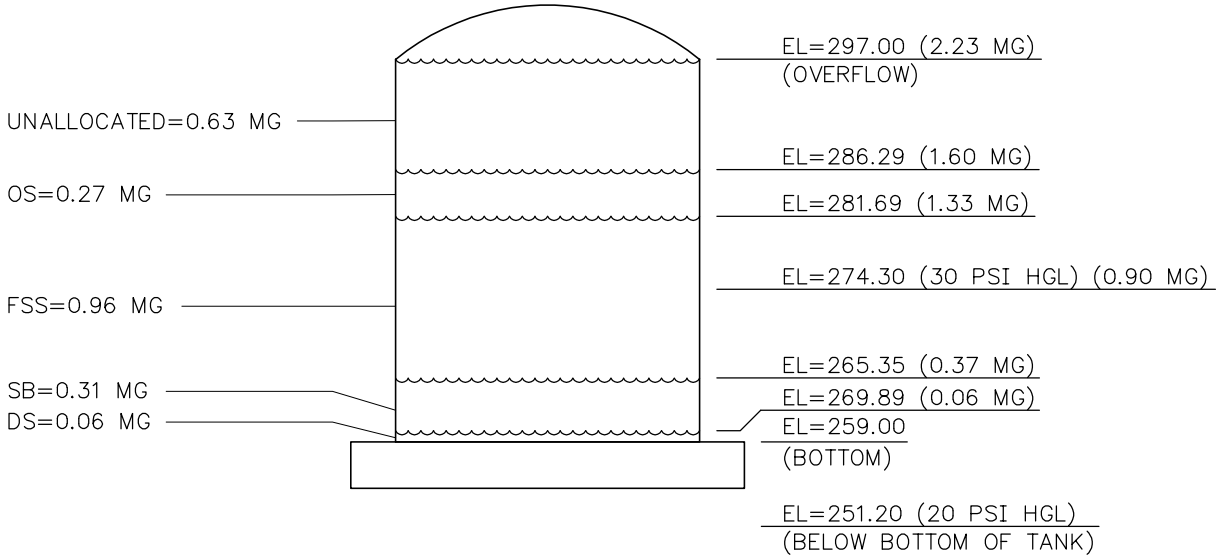

2037 DEMAND FORECAST

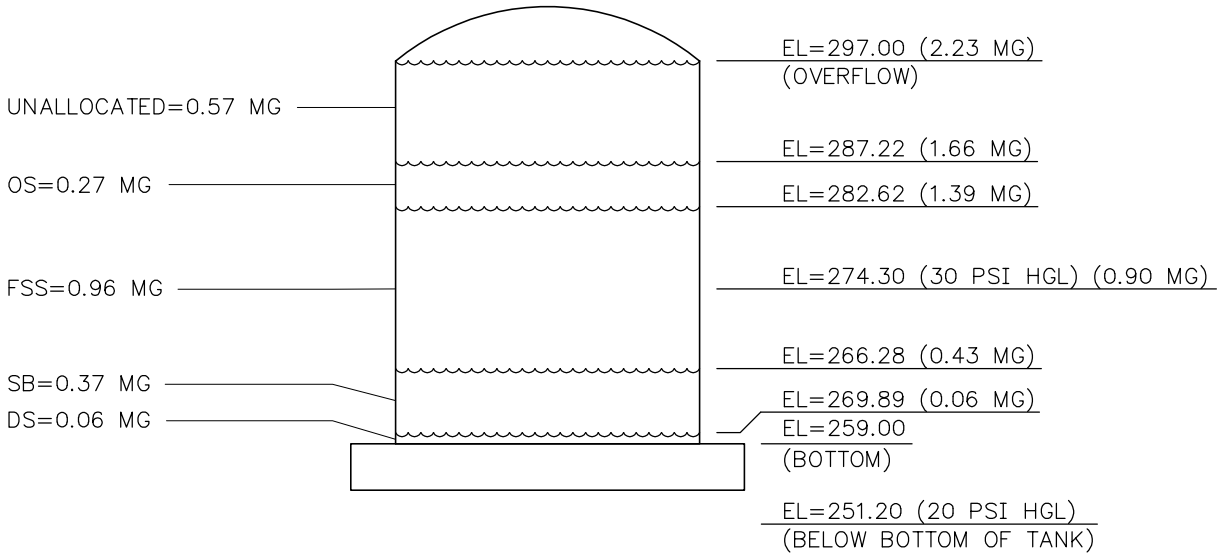

LEGEND:
OS=OPERATIONAL STORAGE
ES=EQUALIZING STORAGE
FSS=FIRE SUPRESSION STORAGE
SB=STANDBY STORAGE
DS=DEAD STORAGE

NOTES:
1. ALL ELEVATIONS ARE IN FEET
2. ALL VOLUMES ARE IN MILLION GALLONS (MG).
3. TOTALS MAY VARY DUE TO ROUNDING.
4. TANK HEIGHT=38'
5. ES=0 FOR THIS ZONE

CHS ENGINEERS

Sammamish Plateau Water

STORAGE UTILIZATION
2.97 TANK (2.25 MG)
FIGURE 3-6
Water Comprehensive Plan

3.2.2.2 Cascade View Zone System-wide Summary

Table 3-8 provides a summary of the storage capacity analysis for the Cascade View Zone. There is sufficient storage capacity to meet current and future projected needs. The total unallocated volume by the 20-year planning horizon is approximately 0.47 MG that provides at least 30 psi to all customers. This is the net unallocated volume considering 0.75 MG available at 30 psi and a deficiency of approximately 0.29 MG in storage that provides at least 20 psi to all customers, at year 2037.

Table 3-8
Summary of Cascade View Zone Storage Capacity Analysis

	Year		
	2016	**2027**	**2037**
Projected ERUs and Demand[1]			
ERUs[2]	784	841	882
Average Day Demand (MGD)	0.18	0.19	0.20
Maximum Day Demand (MGD)	0.38	0.41	0.43
Peak Hour Demand (gpm)	480	508	529
Total Available Source (MGD)[3]	0.95	0.95	0.95
Largest Source (MGD)	0.66	0.66	0.66
Total Source w/ Multi-Source Credit (MGD)[4]	0.29	0.29	0.29
Required Storage Calculations			
Operational Storage (MG)[5]	0.06	0.06	0.06
Equalizing Storage (MG)[6]	0.00	0.00	0.00
Standby Storage (MG)[7]	0.16	0.17	0.18
Fire Flow Storage (MG)[8]	0.12	0.12	0.12
Required Storage			
Greater than 30 psi at highest meter (MG)[9]	0.06	0.06	0.06
Greater than 20 psi at highest meter (MG)[10]	0.28	0.29	0.30
Existing Storage Greater Than 30 psi (MG)			
Well 13 Tank	0.27	0.27	0.27
Well 12 Tank	0.54	0.54	0.54
Total Existing Storage at 30 psi (MG)	0.82	0.82	0.82
Unallocated/(Deficiency) at 30 psi (MG)	**0.75**	**0.75**	**0.75**
Existing Storage Between 20 and 30 psi (MG)			
Well 13 Tank	0.01	0.01	0.01
Well 12 Tank	0.00	0.00	0.00
Total Existing Storage at 20 psi (MG)	0.01	0.01	0.01
Unallocated/(Deficiency) at 20 psi (MG)	**(0.27)**	**(0.28)**	**(0.29)**

Total Unallocated/(Deficiency) at 30 psi (MG) Net of Deficiency at 20 psi	**0.49**	**0.47**	**0.47**

Displayed values rounded in some instances.
Available storage is based on a 5' of dead storage required to meet minimum pump suction.

1. Projected demands as presented in Chapter 2.
2. Number of ERUs are based on Average Day Demand divided by 204 gpd per ERU.
3. See Table 3-3 for source information.
4. Multi-source credit assumes largest source is out of service (in this case, one Well 13R with 260 gpm).
5. Required Operational Storage is based on typical operating levels (Well 13 Tank - 5.6', Well 12 Tank - 3.1').
6. Required equalization storage is calculated as [PHD - Total Available Source) * 150 minutes] with a minimum value of 0.
   PHD: (Maximum Day Demand per ERU / 1440) * [(C) * (N) + F] +18
   (C & F values obtained from Table 5-1 in DOH Dec 2009 WSDM)
7. Required standby storage for existing source = greater of (2*ADD - Multi-source credit) or 200 gallons per ERU.
8. Required fire flow storage = 1,000 gpm x 2 hours.
9. Total required storage greater than 30 psi is equal to the total operational and equalizing storage.
10. Total required storage greater than 20 psi is equal to the total of operation, equalizing, standby and fire flow storage. For analysis purposes, volume at or greater than 20 psi represents the volume between 20 and 30 psi, for standby and fire flow storage purposes.

Figures 3-7 and 3-8 present graphical summaries of the allocation of the storage volume for each tank in the Cascade View Zone, for the demand forecast for 2016 and for 2037.

WELL 12 TANK (0.60 MG) - CASCADE VIEW ZONE GROUP

2016 DEMAND FORECAST

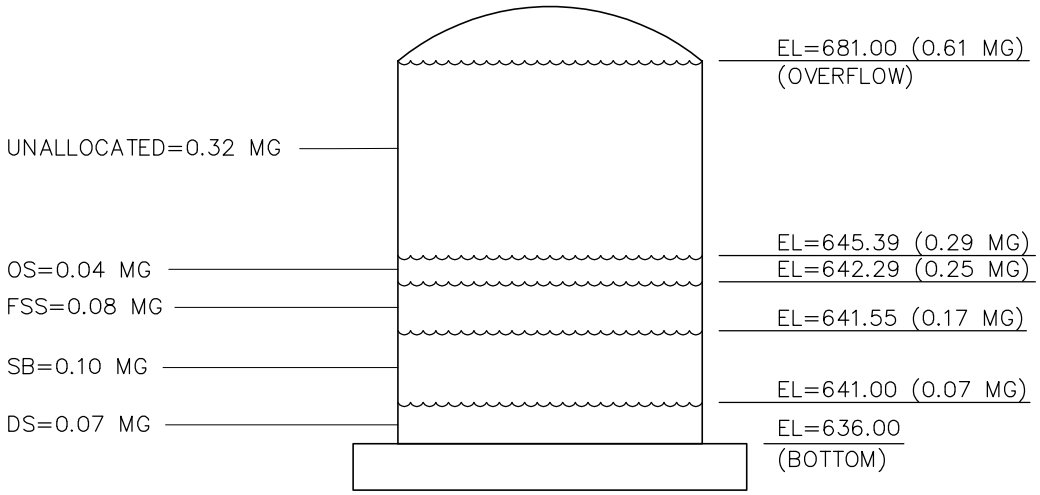

2037 DEMAND FORECAST

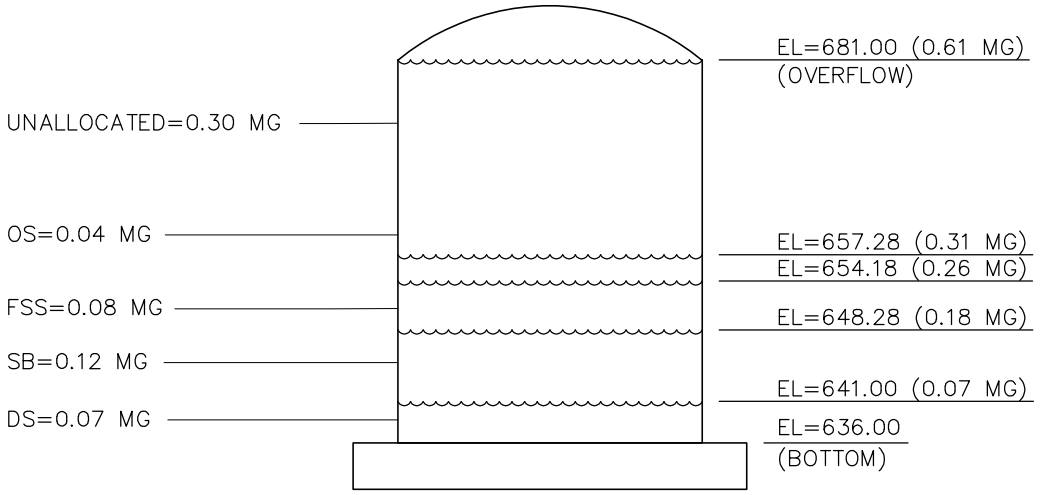

LEGEND:
OS=OPERATIONAL STORAGE
ES=EQUALIZING STORAGE
FSS=FIRE SUPRESSION STORAGE
SB=STANDBY STORAGE
DS=DEAD STORAGE

NOTE:
1. ALL ELEVATIONS ARE IN FEET
2. ALL VOLUMES ARE IN MILLION GALLONS (MG).
3. TOTALS MAY VARY DUE TO ROUNDING.
4. TANK HEIGHT=45'
5. NO 20 PSI OR 30 PSI HGL SHOWN, TANK IS FULLY PUMPED.
6. ES=0 FOR THIS ZONE

CHS ENGINEERS

Sammamish Plateau Water

STORAGE UTILIZATION
WELL 12 TANK (0.60 MG)
FIGURE 3-7
Water Comprehensive Plan

WELL 13 TANK (0.28 MG) - CASCADE VIEW ZONE GROUP

2016 DEMAND FORECAST

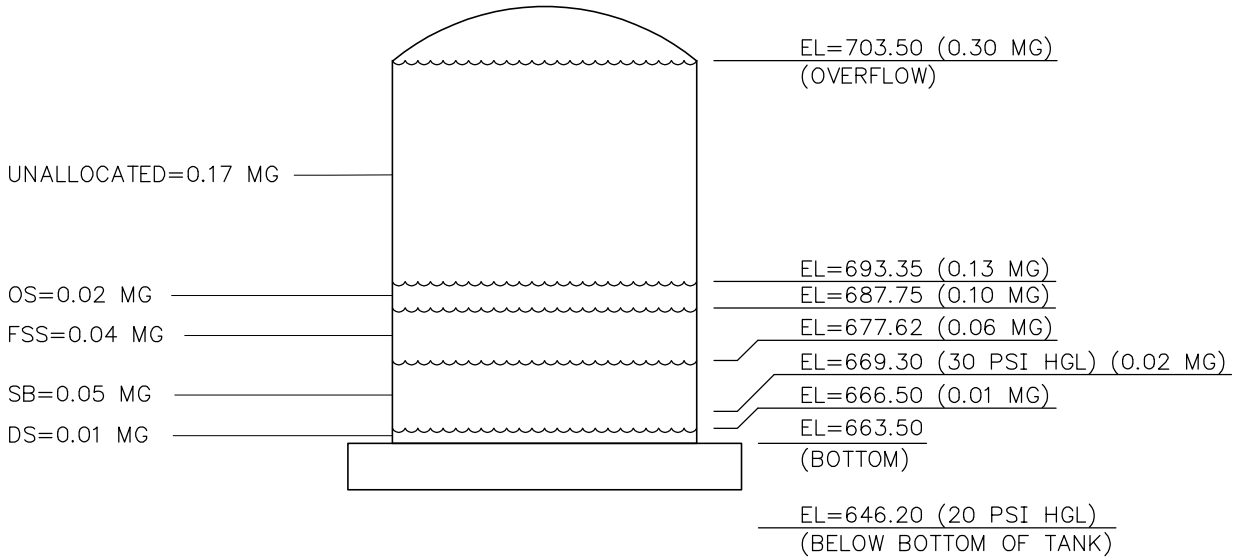

2037 DEMAND FORECAST

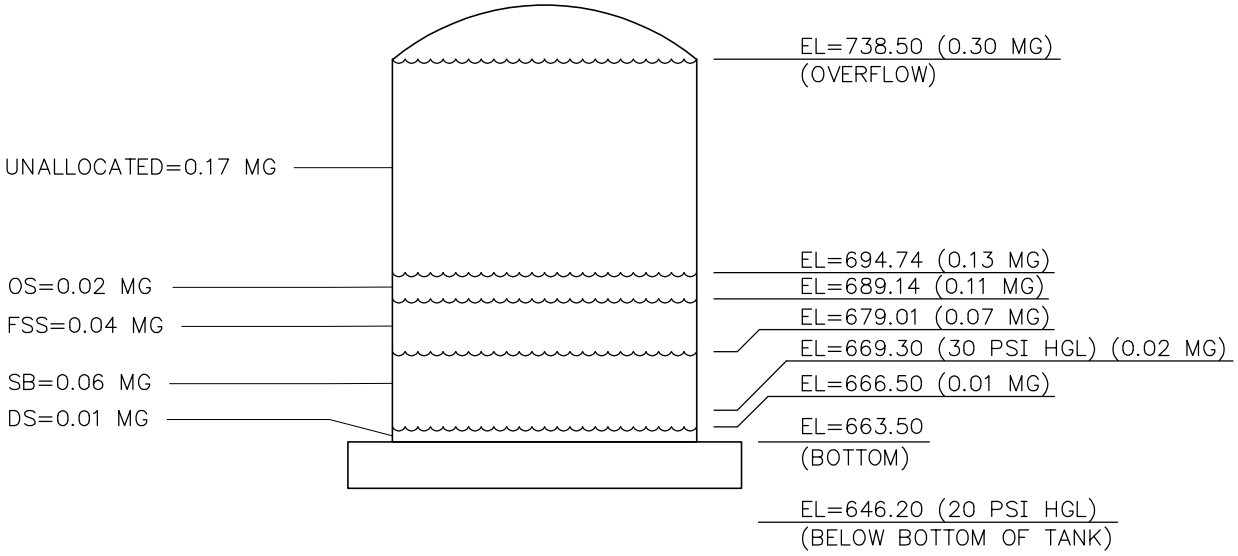

LEGEND:
OS=OPERATIONAL STORAGE
ES=EQUALIZING STORAGE
FSS=FIRE SUPRESSION STORAGE
SB=STANDBY STORAGE
DS=DEAD STORAGE

NOTE:
1. ALL ELEVATIONS ARE IN FEET
2. ALL VOLUMES ARE IN MILLION GALLONS (MG).
3. TOTALS MAY VARY DUE TO ROUNDING.
4. TANK HEIGHT=75'
5. ES=0 FOR THIS ZONE

CHS ENGINEERS

Sammamish Plateau Water

STORAGE UTILIZATION
WELL 13 TANK (0.28 MG)
FIGURE 3-8
Water Comprehensive Plan

Table 3-9 presents a summary of critical dimensions, capacity and elevations for each reservoir.

Table 3-9
Storage Tank Geometry and Utilization Summary

Tanks and Pressure Zone Group	7 MG Tank	2 MG Tank	Section 36 E (4 MG)	Section 36 W (4 MG)
	650			
Overflow Elevation (ft)	654.0	652.5	550.0	550.0
30 psi Elevation (ft)	619.3	619.3	529.3	529.3
20 psi Elevation (ft)	596.2	596.2	506.2	506.2
Min Pump Suction Elev. (ft)[1]			529.0	529.0
Outlet Elev. (ft)	596.0	563.5	525.0	525.0
Base Elevation (ft)	593.0	563.5	525.0	525.0
Height to Overflow (ft)	61.0	89.0	25.0	25.0
Diameter (ft)	140.0	65.0	165.0	165.0
Volume per foot (gal)	115,146	24,821	159,941	159,941
Capacity (gal)	7,023,885	2,209,063	3,998,521	3,998,521
Operating Range (ft)	10.4	8.9	2.3	2.3
Equalizing Range (ft)[2]	1.1	1.1	0.8	0.8
Fire Flow Range (ft)	3.7	3.7	1.4	1.4
Standby Range (ft)[2]	16.1	16.1	6.0	6.0
Dead Storage (gal)	368,466	811,645	639,763	639,763
Dead Storage (ft)	3.2	32.7	4.0	4.0

Table 3-9 (cont.)
Storage Tank Geometry and Utilization Summary

Tanks and Pressure Zone Group	3 MG Tank	297 Tank (2.25 MG)	Well 12 Tank (0.60 MG)	0.28 MG (Well 13R)
	700	297	Cascade View	
Overflow Elevation (ft)	703.5	297.0	681.0	738.5
30 psi Elevation (ft)	679.3	274.3		669.3
20 psi Elevation (ft)	656.2	(below base elev.)		(below base elev.)
Min Pump Suction Elev. (ft)[1]			641.0	
Outlet Elev. (ft)	590.5	260.0	637.0	666.5
Base Elevation (ft)	587.5	259.0	636.0	663.5
Height to Overflow (ft)	116.0	38.0	45.0	75.0
Diameter (ft)	67.0	100.0	48.0	26.0
Volume per foot (gal)	26,372	58,748	13,535	3,971
Capacity (gal)	3,059,138	2,232,416	609,097	297,851
Operating Range (ft)	11.6	4.6	3.1	5.6
Equalizing Range (ft)[2]	0.0	0.0	0.0	0.0
Fire Flow Range (ft)	36.4	16.3	5.9	10.1
Standby Range (ft)[2]	31.2	6.3	7.3	12.5
Dead Storage (gal)	1,811,748	58,748	67,677	11,914
Dead Storage (ft)	68.7	1.0	5.0	3.0

1. Minimum Pump Suction Elevation applicable to only those tanks which serve zones through booster pumps exclusively. HGLs for 20 and 30 psi do not apply to these tanks.

2. Equalizing and Standby storage vary by year. Values shown here represent projected storage requirements for 2037.

3.3 Distribution System Analysis

3.3.1 Analysis Methodology

The District's water system was analyzed, and deficiencies were identified for the following two conditions: peak hour demands, and maximum day demands plus fire flow. All modeling calculations were performed within the InfoWater software produced by Innovyze.

3.3.2 System Components

The InfoWater software allows all pipes and junction nodes in the District's distribution system to be entered into a holistic model, which includes approximately 7,900 pipes,

along with pressure reducing stations, reservoirs, wells, regional interties and pump stations.

Prior to this Water Comprehensive Plan update, the District's hydraulic model was updated and recalibrated. The piping network information was obtained from the District's GIS. Facilities in the model were verified with record drawings and system information. The pump operation and controls were also updated so the model is based on the actual state of the network, crosschecked with the District's current practices for all the pump stations according to staff input.

3.3.3 Water Demand Allocation

Chapter 2 summarizes water demands for the District's existing water system, as well as projected water demands for the 10-year and 20-year planning horizons. The current and future demands presented in Chapter 2 were developed from parcel level existing and future ERU information provided by the District. To produce water demand forecasts, water usage data was first summarized to identify water demand per ERU on a customer class basis. Water usage per ERU was then applied to the existing and projected ERUs associated with each parcel. Other usage and system leakage were also accounted for, on a zone by zone basis. A peaking factor was applied to convert ADD to MDD and PHD.

The same parcel level ERU data was used to spatially distribute existing and future water demand within the hydraulic model. Each parcel (and its water demand) was associated with the nearest model node. Nodes on transmission mains, near facilities such as tanks, pump stations, and PRV stations, were excluded from demand allocation. Demand was peaked on a zone by zone basis to account for other usage and water leakage, and to convert from ADD to MDD and PHD for each planning period.

3.3.4 Calibration

Model calibration is a critical step that should be completed during the development of a hydraulic model, prior to using it as a predictive tool. Calibration typically consists of measuring system pressure and fire hydrant flow rates in the field and comparing them with model-generated pressures and flows. A key to successful calibration is ensuring that all system parameters or boundary conditions are collected at the time of testing. These boundary conditions typically consist of the demand for the day of testing, along with reservoir levels and pump station and well flows. The Final Technical Memorandum for the 2016 Hydraulic Model Development and Calibration is provided in Appendix M. Calibration was performed for both the extended period simulation model (EPS) and steady state model. Summary information from the Memorandum is provided in the following.

The updated hydraulic model was calibrated by comparing model results to field data. A total of 45 locations were used for field tests, which included collecting pressure and flow information. The field test locations included all of the medium to large pressure zones and throughout the service area, including 37 tests in the Plateau Zone and eight tests in

the Cascade View Zone.

A field test consisted of measuring the static pressure at a hydrant (the pressure hydrant), and then opening a nearby hydrant (the flow hydrant) to generate a pressure drop of at least 10 psi, while collecting flow and residual pressure information. System information was collected from the District's SCADA system, including well and booster pump status, flow through interties, and storage tank levels.

The calibration tests provide a comparison of pressures between the field and the model under normal demand conditions. The tests were conducted in June, July and October 2016. The static calibration provides the user with a good overall sense of the accuracy of the model. Each test location was classified with a High, Medium or Low level of confidence based on the match between the measured and modeled static and residual pressures.

Level of Confidence	Static Error	Residual Error
High	< 5 % or < 7 psi	< 10 % or < 10 psi
Medium	< 10 % or < 10 psi	< 15 % or < 15 psi
Low	> 10 % or > 10 psi	> 15 % or > 15 psi

The results of the model calibration and validation showed:

- High level of accuracy for static pressure at all 45 test locations.
- High level of accuracy for residual pressure at 42 test locations.
- High Level of accuracy for the static pressures in all 25 Pressure Zones.
- High Level of accuracy for the residual pressures in 22 of 25 Pressure Zones.
- Medium Level of accuracy for residual pressures in 3 of 25 Pressure Zones.
- Overall calibration at High Level of accuracy in 24 of the 25 Pressure Zones.
- Overall calibration at Medium Level of accuracy in 1 Pressure Zone (475 Zone).

Additional investigation and testing are suggested in the 475 Pressure Zone to determine why the level of accuracy was lower than other areas of the District. There was a water main construction project in process during the calibration, which may have caused the actual piping network to not fully match the modeled network during testing.

No modifications to friction factors were made during the calibration effort. Ninety-eight percent of the District's piping is Ductile or Asbestos Cement (based on the GIS data) with much of it relatively new. Piping was assigned a C- factor, the value used to indicate the smoothness of the interior of a pipe, of 140. The District has not found any evidence of C-factor reducing tuberculation in the system. No other "data" based reason to modify particular pipes' C-factors could be identified that would have improved the calibration.

It should be noted that model calibration is a process that requires regular updating, since the system continues to change. The model should be compared to field or SCADA data on a regular basis. The District will continue to collect hydrant flow data and use it to further refine the model in the future. Additional EPS calibration was done in

June 2018.

3.3.5 Modeling Scenarios

The District has an extensive distribution system with more than 250 miles of transmission and distribution pipe. The large range in elevations within the system contributes to areas of high and low pressure. The District has configured their system with a number of pressure zones controlled by pressure reducing valves (PRVs). However, higher pressures in particular occur and are managed using individual customer PRVs where pressures are excessively high. Areas of low pressure develop during peak hour demands and some substandard fire flows exist, which will be described further in this section. The model was used to identify improvements that would increase the distribution system capacity to meet the required level of service for pressures and fire flows.

In accordance with WAC 246-290-230, a minimum pressure of 30 psi must be maintained at all customer connections under peak hour demand (PHD) conditions with equalizing storage depleted in the reservoirs. A minimum of 20 psi must be maintained for fire flows under MDD conditions with equalizing and fire flow storage depleted. The DOH Water System Design Manual includes the recommendation that the velocity in the distribution system not exceed eight feet per second (fps) under PHD conditions, or 10 fps under fire flow conditions. As a conservative measure, the system has been evaluated for a maximum of eight fps for all conditions. If these criteria could not be met, improvements were identified and through an iterative trial-and-error process, implemented in the model until pressure criteria could be satisfied.

A number of steady state hydraulic scenarios were completed for each pressure zone and planning horizon. With the exception of one new area developing pressure deficiencies in 2037, results were consistent across each planning horizon. The analyses evaluated max day demand, peak hour demand, and fire flow demand (MDD plus fire flow) conditions under existing, 10 and 20-year conditions. Areas experiencing pressures below the criteria were the same for both MDD and PHD scenarios. For this reason, only the results of the peak hour and fire flow analyses are described in greater detail below.

3.3.6 Peak Hour Analysis Results

Peak hour analyses were run for each scenario. Tank levels were set at the bottom of the equalizing band.

3.3.6.1 Plateau Zone

For the Plateau Zone, under peak hour conditions, small pockets of low pressure and large areas of high pressure were observed in the system. Five areas of low service pressure were identified as part of this analysis. Additional low-pressure areas exist around pumps, wells, reservoirs, downstream of PRVs and on transmission lines where no service connections are present. No solutions were proposed in these areas as they do not affect customer service. Figure 3-9 presents anticipated areas of low service

pressure in the system in 2037 and are described further in text below. All the areas of low pressure are due to areas of high elevation within a pressure zone and are generally not caused by excessive frictional losses that can be mitigated with larger pipes or additional piping connections.

Area 1: The 400 Broad Zone has two services with high elevations on a dead-end pipe that create low pressures. The solution for this area is addressed by CIP Project FF-1. This project creates redundancy by adding another connection from the 550 Zone to 400 Broad. The pressure zone boundary will be modified to incorporate the services experiencing low pressures into the 550 Zone. As part of this zone boundary change a PRV will be installed. Serving these customers via 550 Zone will create higher pressures under typical operating conditions. Individual customer PRVs may be required.

Area 2: The 475 Zone includes three high elevation areas with low pressures. Low pressures range from 12 to 27 psi in these locations. Low pressures at the end of 211th Avenue NE can be addressed by CIP Project FF-4 which includes moving these customers to the 700 Zone. The area of high elevation at the end of 208th Avenue NE can be addressed by moving these higher customers to the 700 Zone. For both solutions, it will be necessary to install individual customer PRVs. Due to lack of a viable option for connection to the 700 Zone, it may be necessary for homeowners at the end of 210th Avenue NE to install service line booster pumps.

Area 3: High elevation areas downstream of the PRV create a small area of low pressure. Homeowners may need to install service line booster pumps.

Area 4: The one notable difference between 2017 and 2037 PHD scenarios is two customer services experience pressures of 12 psi under 2037 PHD conditions. Under existing conditions, the services are able to meet the pressure criteria but as demands increase in the future they become deficient. The services are located at the end of a 2-inch line and the deficiency will be addressed by CIP Project FF-6 which creates more looping in the Town Center area.

Area 5: There is a small area of low pressure in the 297 Zone. The District plans to move these customers to the 560 Zone, which will increase pressures. It will likely be necessary to install individual customer PRVs to alleviate high pressures when served from the 560 Zone.

The areas of high pressure are defined by a pressure greater than 100 psi with some locations having a pressure above 120 psi. The topography of the Plateau Zone varies significantly resulting in the large areas of high pressure. These high-pressure areas have been identified previously and customers have likely had individual customer PRVs installed.

Descriptions of specific distribution system improvements identified for implementation throughout the 20-year planning period are provided in Chapter 8.

3.3.6.2 Cascade View Zone

Under year 2037 peak hour conditions in the Cascade View Zone there is one area of low pressure, Area 1 CV, that is located near the Well 13 Tank. The elevation of the system at that location limits the available pressure to slightly less than 30 psi. All other areas experience pressure greater than 30 psi. Figure 3-10 shows the areas of low pressure.

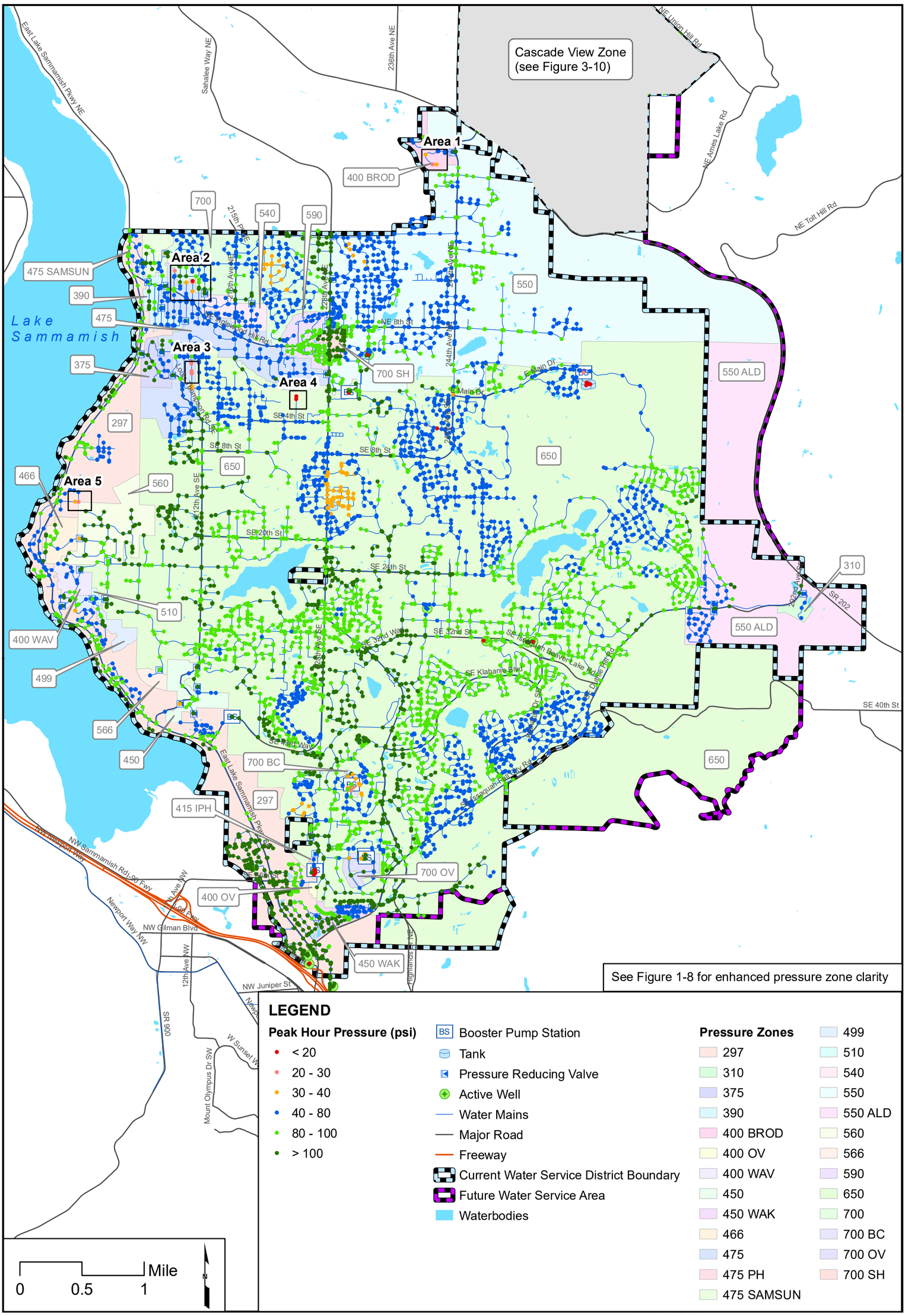

CHS ENGINEERS

Sammamish Plateau Water

2037 Peak Hour Pressure Plateau Zone

FIGURE 3-9

Water Comprehensive Plan

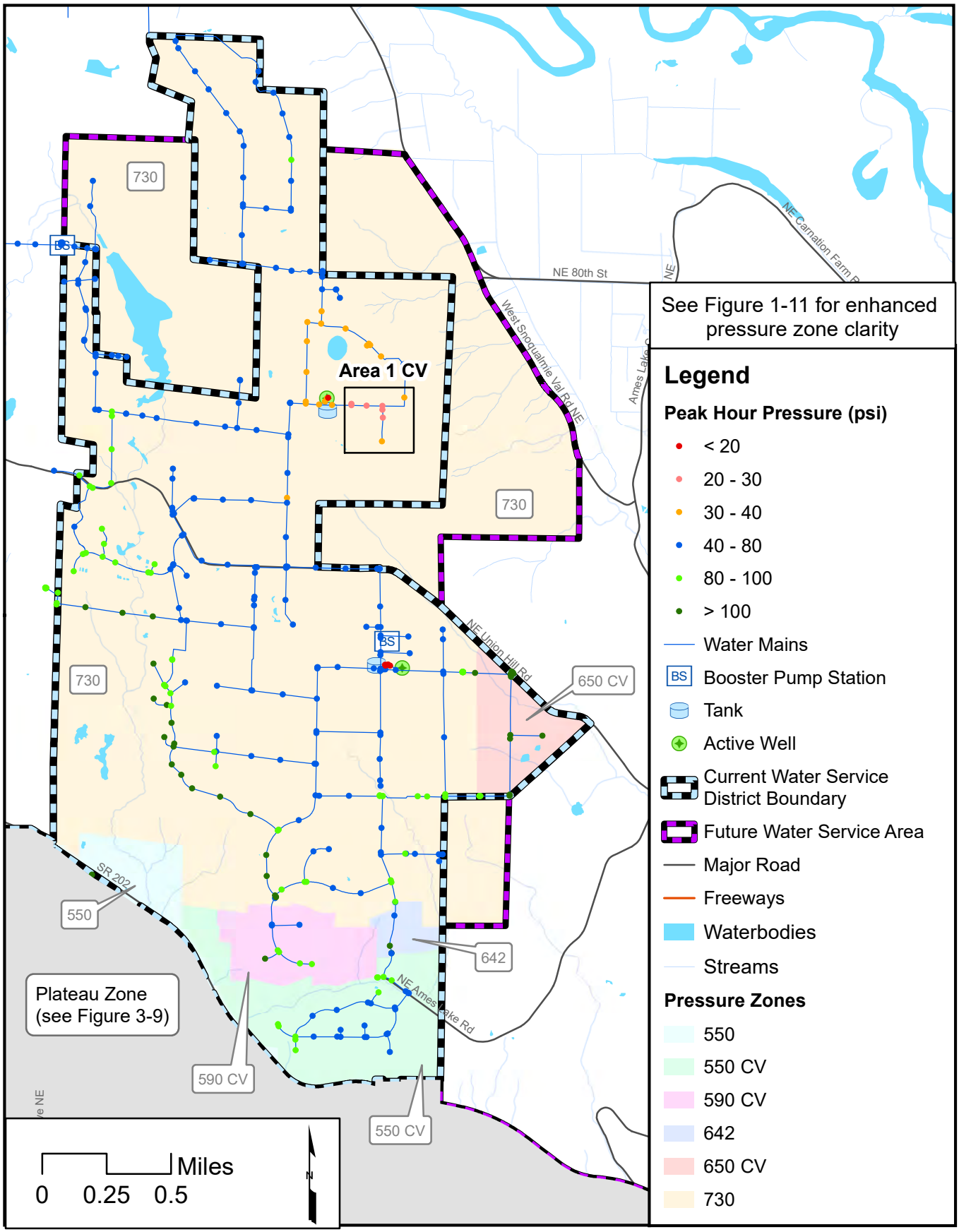

CHS ENGINEERS

Sammamish Plateau Water

2037 Peak Hour Pressure Cascade View Zone

FIGURE 3-10

Water Comprehensive Plan

3.3.7 Fire Flow Analysis Results

Fire flow analyses were conducted in both the Plateau and Cascade View Zones, concurrent with MDD for year 2037. Fire flow demands were assigned based on zoning according to the following designations: 1,000 gpm for existing Single-Family Residential (1,750 gpm for new), 2,500 gpm for Medium Density Multi- Family Residential, and 3,000 gpm for High Density Multi-Family Residential, Business, or Commercial. Additional specific sites were identified by District staff as having a fire flow requirement above 3,000 gpm. The Town Center and the Lake Sammamish Center areas have fire flow requirements of 4,000 gpm. Figure 3-11 details the system fire flow requirements by parcel. Each larger zone, (297, 550, 650, and 700) was analyzed separately with each zone's respective tanks at the bottom of the fire flow band. In the Cascade View Zone, the Well 13 Tank was run at the bottom of the fire flow band. In the 700 Zone it was assumed that 2,000 gpm was being supplied through the interties with Northeast Sammamish Water District under fire conditions. Smaller zones that are fed by PRVs were included in each respective larger zone.

Velocity conditions were also analyzed to determine where the system cannot meet the eight fps criteria. As Figures 3-12 and 3-14 detail, the areas that are deficient occur where there are large fire flow requirements, small diameter piping, or dead ends. Many of these locations are in areas where fire flow requirements have increased over time and pipes were not sized to meet these large flow requirements. No improvements are included for these areas unless flows cannot be provided at 20 psi. It should be noted that any new construction must be able to convey fire flows at less than eight fps at the residential requirement of 1,750 gpm.

The fire flow deficiencies as indicated on Figures 3-12 and 3-14 and as listed in Tables 3-10 and 3-11, as introduced below, are presented in more detail in figures in Appendix M.

3.3.7.1 Plateau Zone

Table 3-10 and Figure 3-12 detail the nature and location of each fire flow deficiency found in the Plateau Zone portion of the system. Many of the deficiencies are due to pressure issues caused by the areas of high elevation discussed in the peak hour demand analysis. Some are due to velocity exceeding eight fps. The pipelines that were unable to deliver fire flow volumes with adequate pressure require improvements. Most of the deficiencies can be eliminated by creating looping or replacing existing pipes with larger diameters. Each area has associated CIP projects that are indicated on Figure 3-13 and discussed more in Chapter 8.

<u>FF Area 1:</u> Deficiency caused by services at higher elevations than the rest of the zone. This can be solved by creating a redundancy connection to the zone and moving two services in the 400 Broad Zone to the 550 Zone. As part of this project, the installation of a new PRV and the associated zone boundary changes are included. These improvements are incorporated in CIP Project FF-1.

FF Area 2: Multiple services with high elevations cause areas of deficiency in the 475 Zone. The services at the north end of 211th Avenue NE can be fixed by adding a pipe connection, CIP Project FF-4, between 211th Avenue NE and 211th Place NE. The services would be moved to the 700 Zone and include associated valve changes. In addition, CIP Project FF-2 along 212th Ave NE is recommended to improve transmission and fire flow capacity in this section of the 700 Zone. This project will replace about 725 feet of existing 6-inch water main between NE 14th St. and NE 16th St. Similarly, high services at the end of 208th Avenue NE can be moved to the 700 Zone. Service line PRVs will need to be installed in both instances.

There is no viable option to connect customers located at the end of 210th Avenue NE to the 700 Zone. There is a hydrant located approximately 450 feet to the south that can provide 750 gpm. It should be noted these areas were excluded from model fire flow runs due to their limiting of pressure requirements for a majority of the 475 Zone. Upsizing small diameter pipe will solve fire flow deficiencies located near NE 11th Street (see CIP Project FF-3).

FF Area 3: Deficiencies near 216th Avenue NE can be solved by installing a new PRV to meet the 3,000 gpm requirement (see CIP Project FF-5).

FF Area 4: Two projects near the Town Center will increase fire flow availability to meet the 4,000 gpm requirement. The first project, CIP Project FF-7, is a main replacement on SE 4th Street that will upsize the 8-inch pipe with 12-inch. The other project, FF-6, will create more looping in the Town Center area with 16-inch diameter pipe.

FF Area 5: The deficiency can be solved by installing redundancy piping that connects the 560 to the 297 Zone and includes the installation of a PRV (see CIP Project FF-10). Customers in this area currently served by the 297 Zone would be moved to the 560 Zone. Due to the large difference in elevations between these zones, it is recommended individual customer PRVs or another mainline PRV are installed to reduce pressures. A loop (CIP Project FF-9) can be created on SE 14th Street to connect existing pipe to address deficiencies in this area as well.

FF Area 6: The deficiency near the Section 36 Tanks can be solved by upgrading existing 6-inch pipe to 12-inch to meet the 3,000 gpm requirement (see CIP Project FF-8).

FF Area 7: There are a handful of deficiencies in the 297 Zone due to small diameter pipe and a larger fire flow requirement in a commercial area. One pocket of deficiencies can be addressed by upgrading 6-inch pipe to 8-inch along SE 29th Street and SE 30th Street. In addition, a new PRV between the 499 Zone and 297 Zone will increase fire flow availability to the 297 Zone. The PRV should be set at an HGL that ensures it is only opening under fire flow conditions. To address a deficiency in the 499 Zone, CIP Project FF-11 upsizes existing 4-inch pipe to 8-inch. Project FF-12 creates a loop to solve the deficiency in this area to the west of East Lake Sammamish Parkway.

FF Area 8: Deficiencies in the 700 OV Zone are limited by booster pump capacity. The recommended solution for this is to extend parallel 650 piping and move the deficient hydrants that are currently located on 700 OV Zone piping to the new 650 piping (see CIP Project FF-13).

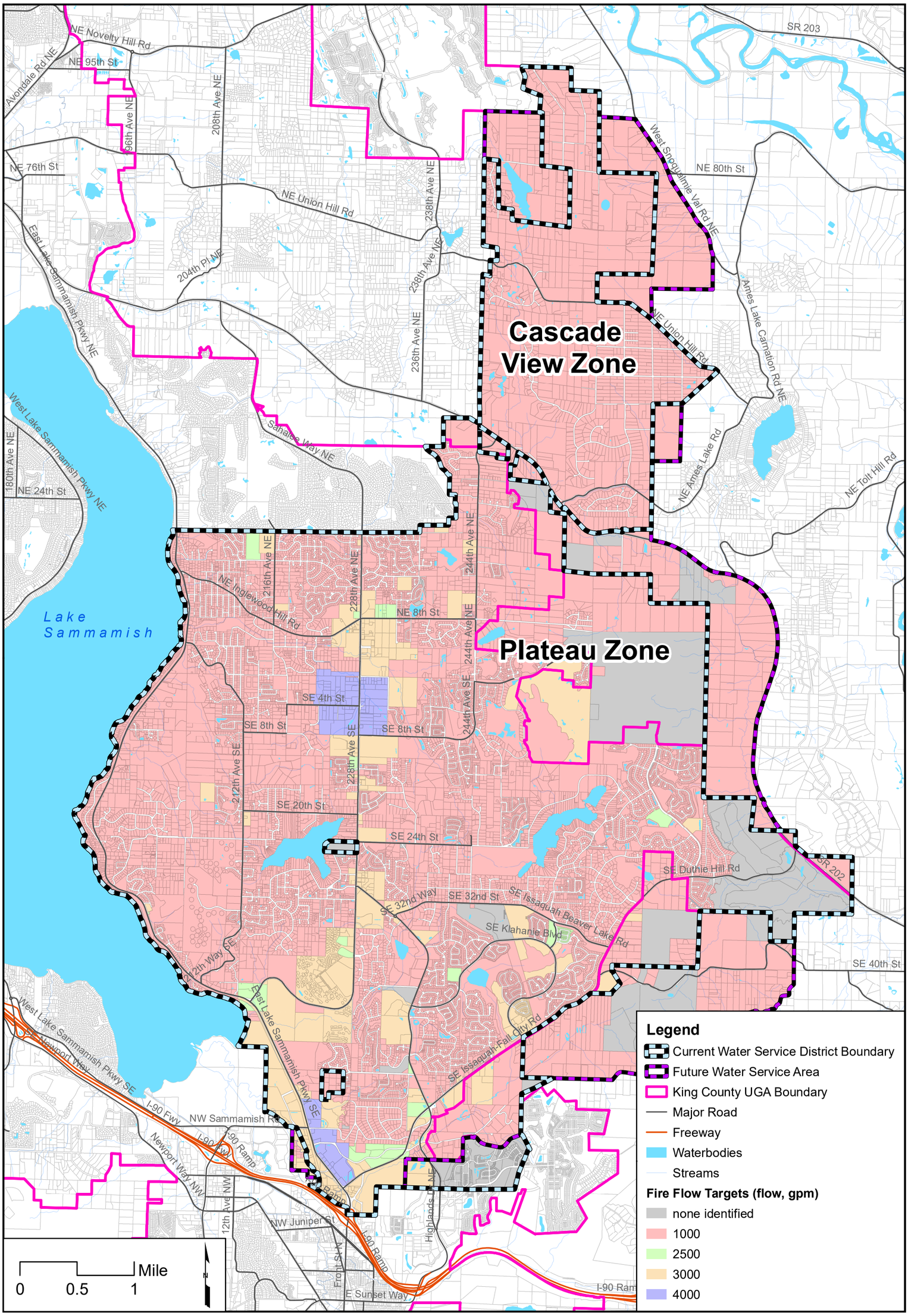

CHS ENGINEERS

Sammamish Plateau Water

Fire Flow Targets

FIGURE 3-11

Water Comprehensive Plan

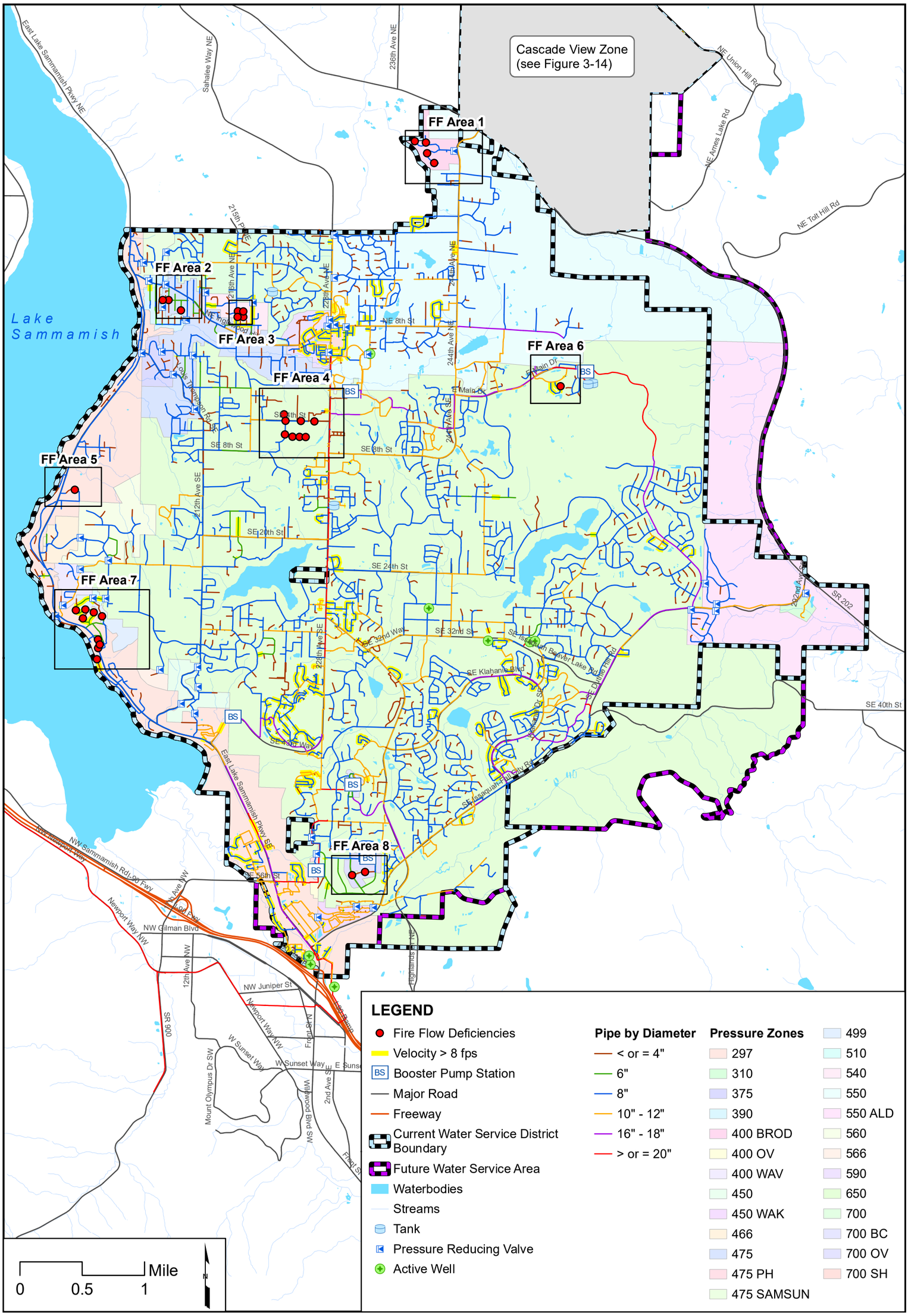

CHS ENGINEERS

Sammamish Plateau Water

2037 Fire Flow Deficiencies
Plateau Zone
FIGURE 3-12
Water Comprehensive Plan

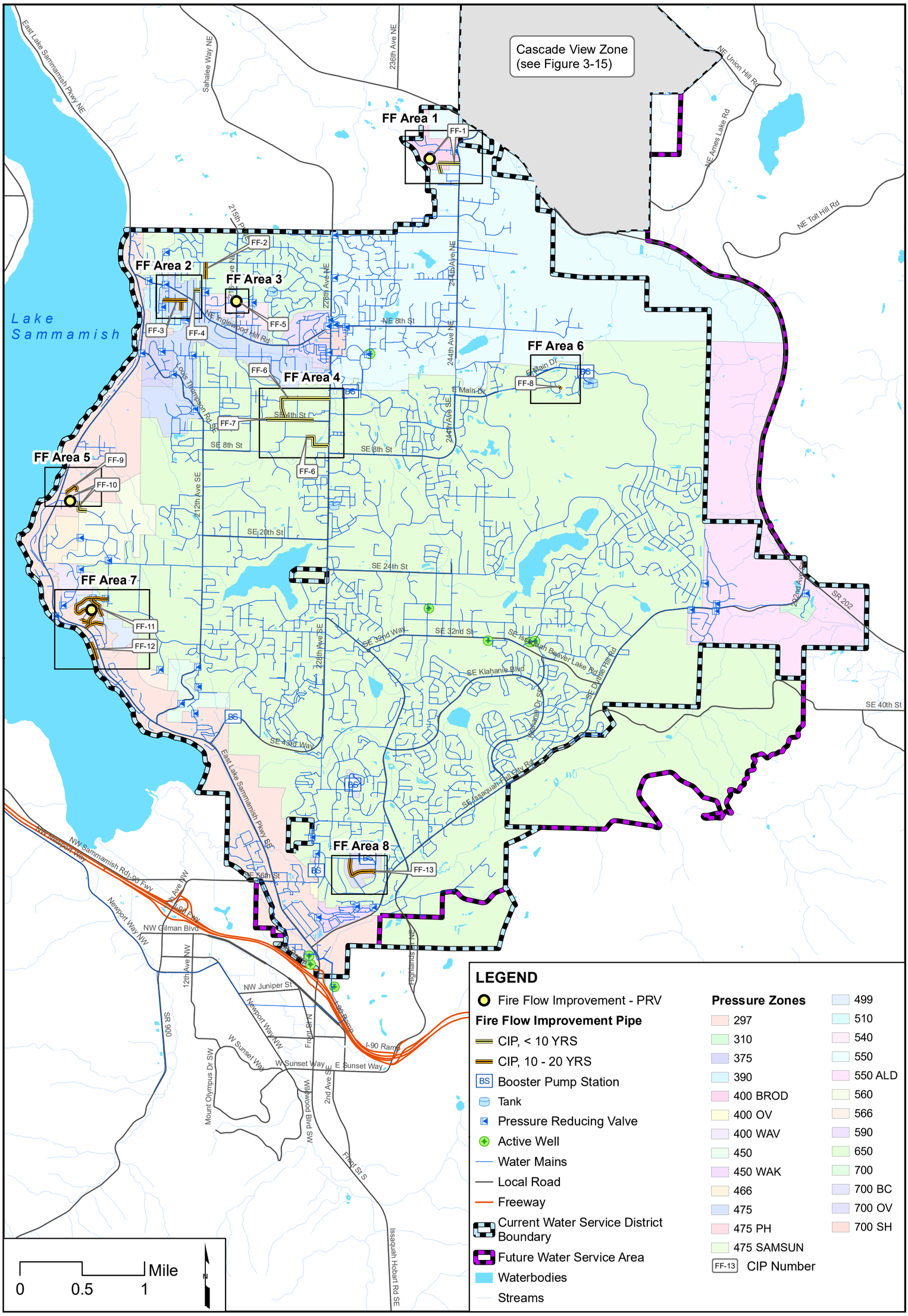

CHS ENGINEERS

Sammamish Plateau Water

Fire Flow Improvements
Plateau Zone
FIGURE 3-13
Water Comprehensive Plan

Table 3-10 - 2037 Fire Flow Deficiencies - Plateau Zone

Area ID	Zone	Model Junction ID	Fire Flow Required (gpm)	2037 Available Flow (gpm)	Notes (see Figures 8-1 & 8-2)
FF Area 1	400 Broad	J-1932	1,000	555	Addressed by CIP Project FF-1 (8" main and PRV)
		J-1933	1,000	677	
		J-3268	1,000	974	
		J-3270	1,000	977	
FF Area 2	475	J-2070	1,000	909	Addressed by CIP Projects FF-3 and FF-4 (8" main)
		J-4258	1,000	833	
		J-4259	1,000	834	
FF Area 3	540	J-4231	3,000	1,492	Addressed by CIP Project FF-5 (PRV)
		J-6161	3,000	1,509	
		J-6162	3,000	1,508	
		J-6175	3,000	1,518	
FF Area 4	650	J-4424	4,000	1,557	Addressed by CIP Projects FF-6 and FF-7 (16" and 12" main)
		J-4425	4,000	1,573	
		J-4427	4,000	1,556	
		J-4429	4,000	1,618	
		J-6164	4,000	1,522	
		J-6174	4,000	2,253	
		J-7000	4,000	1,538	
		J-7001	4,000	1,529	
FF Area 5	297	J-5168	1,000	884	Addressed by CIP projects FF-9 and FF-10 (8" main and PRV)
FF Area 6	650	J-3747	3,000	2,309	Addressed by CIP Project FF-8 (12" main)
FF Area 7	297	J-223	1,000	976	Addressed by CIP Project FF-11 (8" main and PRV)
		J-532	1,000	505	
		J-1620	1,000	428	
		J-2529	1,000	613	
		J-2547	2,500	1,781	
		J-6532	3,000	1,743	
		J-6534	3,000	1,762	
		J-7104	1,000	883	Addressed by CIP Project FF-12 (8" main)
FF Area 7	499	J-2533	1,000	580	Addressed by CIP Project FF-11 (8" main)
FF Area 8	700 OV	J-6492	1,000	264	Addressed by CIP Project FF-13
		J-6494	1,000	263	

3.3.7.2 Cascade View Zone

Table 3-11 and Figure 3-14 depict the results of the fire flow analysis for the Cascade View Zone. Deficiencies are caused by small diameter piping and dead-end mains in the system. There are two areas of deficiency in the Cascade View Zone. The first area, FF Area 1 CV, can be solved by upsizing pipe near the tank and creating a new loop near the North Regional connection (see CIP Projects FF-14 and FF-15).

FF Area 2 CV can be solved by completing loops and upsizing pipe near the Well 12 Tank Facility (see CIP Projects FF-16 and FF-17). CIP Project FF-18 will replace approximately 660 feet of existing 2-inch main with 8-inch pipe on NE 45th St, east of 272nd Ave NE. This project will complete an extension from CIP Project FF-17, in support of a future connectivity/extension project to the east. Each CIP project is indicated on Figure 3-15 and discussed more in Chapter 8.

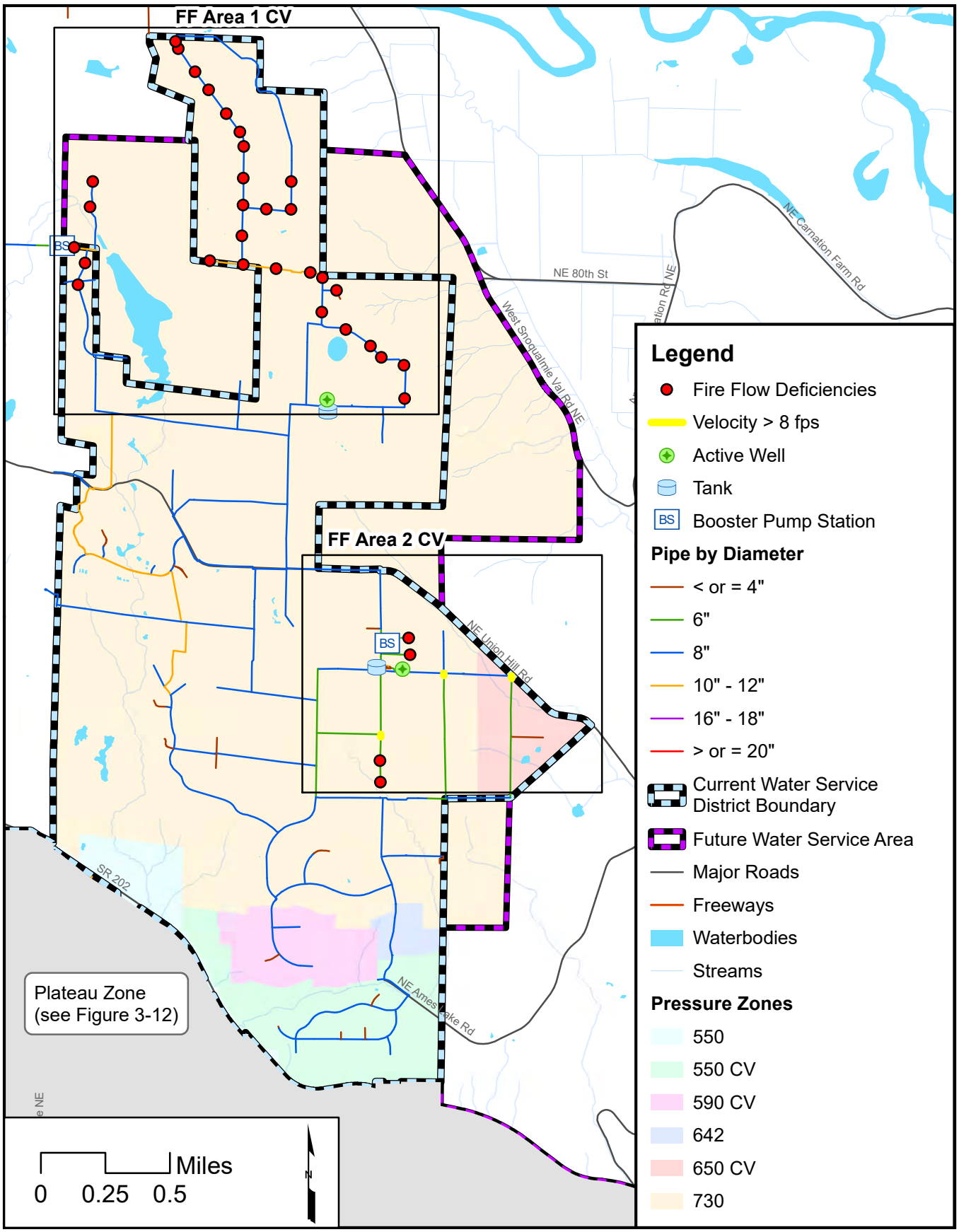

2037 Fire Flow Deficiencies
Cascade View Zone

FIGURE 3-14

Water Comprehensive Plan

CHS ENGINEERS

Sammamish Plateau Water

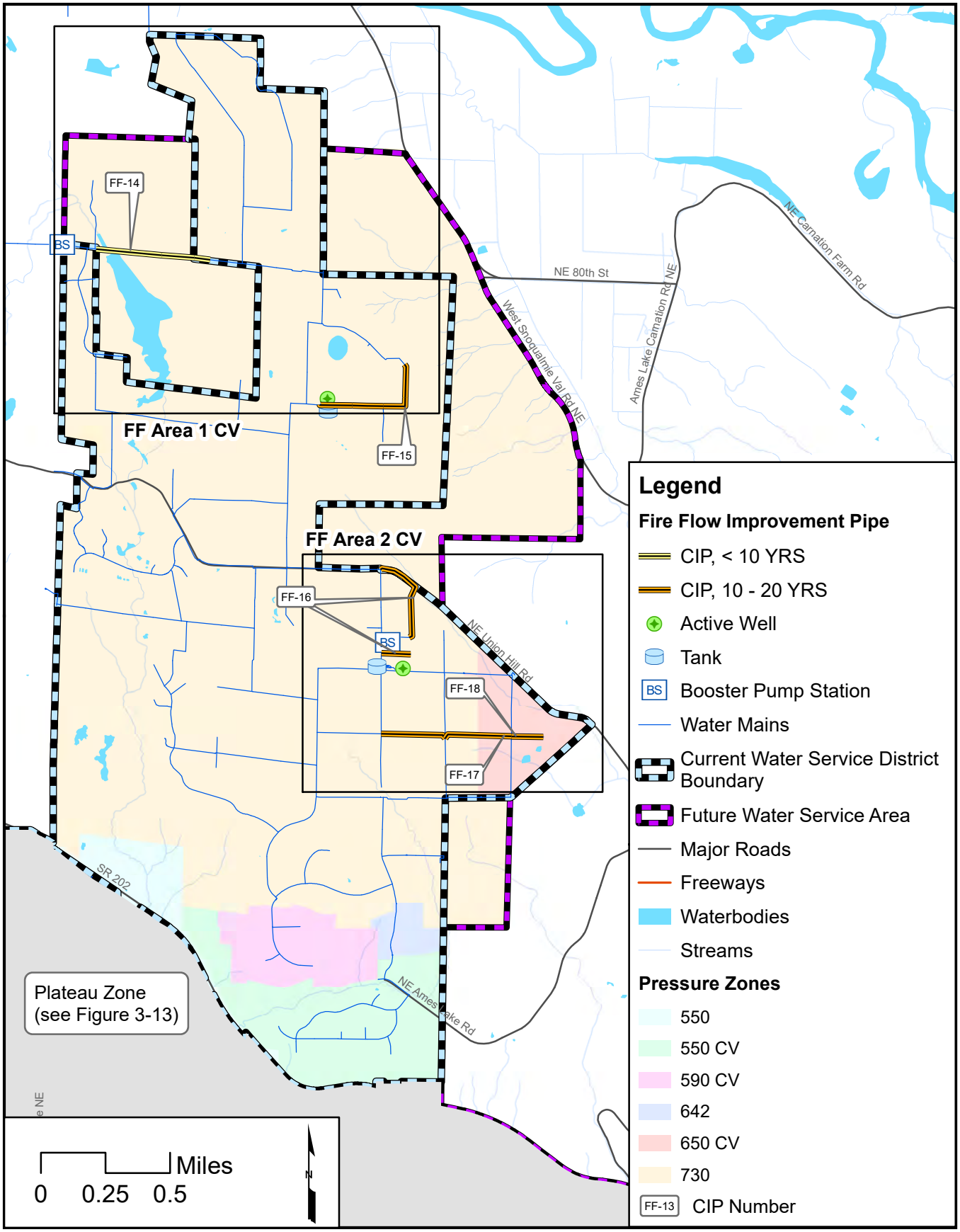

CHS ENGINEERS

Sammamish Plateau Water

Fire Flow Improvements Cascade View Zone

FIGURE 3-15

Water Comprehensive Plan

Table 3-11 - 2037 Fire Flow Deficiencies - Cascade View Zone

Area ID	Zone	Model Junction ID	Fire Flow Required (gpm)	2037 Available Flow (gpm)	Notes (see Figures 8-1 & 8-2)
FF Area 1 CV	730	J-1741	1,000	878	Addressed by CIP Projects FF-14 and FF-15
		J-3259	1,000	899	
		J-4501	1,000	899	
		J-4875	1,000	854	
		J-4877	1,000	855	
		J-4878	1,000	853	
		J-4900	1,000	854	
		J-4901	1,000	854	
		J-4902	1,000	854	
		J-4904	1,000	853	
		J-4906	1,000	853	
		J-4907	1,000	853	
		J-4908	1,000	854	
		J-4911	1,000	889	
		J-5405	1,000	818	
		J-5408	1,000	857	
		J-5409	1,000	788	
		J-5410	1,000	944	
		J-5412	1,000	749	
		J-6586	1,000	853	
		J-6587	1,000	854	
		J-6588	1,000	853	
		J-6589	1,000	853	
		J-6778	1,000	853	
		J-6779	1,000	853	
		J-2233	1,000	948	
		J-3202	1,000	965	
		J-2232	1,000	966	
FF Area 1 CV	730	J-2235	1,000	967	Addressed by CIP Projects FF-14 and FF-15
		J-2236	1,000	976	
FF Area 2 CV	730	J-5853	1,000	929	Addressed by CIP Project FF-16
		J-3142	1,000	911	
		J-3241	1,000	923	Addressed by CIP Project FF-17 and FF-18
		J-5435	1,000	922	

3.3.8 Redundancy Analysis

A redundancy analysis was completed to identify the criticality of system facilities as part of a larger project to assess the impact to the District in the case of a significant seismic event. This analysis included the following:

- Pipeline Criticality: Identifies pipelines required to provide adequate system pressure.
- Pipeline Isolation: Identifies pipelines that require the closure of five or more valves to isolate.
- Valve Criticality: Identifies valves that require six or more valves to isolate in the event of valve failure.
- Dead-ends: Identifies pipelines that serve as the only source of supply for total demand in the ranges of 10 to 50 gpm MDD customer demand, and 50 gpm or more MDD customer demand.

This analysis was completed using the calibrated Infowater Hydraulic Model, and system valve data in GIS. The Valve Criticality Module and Protector Module Vulnerability analysis by Innovyze, were used for valve criticality and pipe criticality respectively. Opticritical software by Optimatics was used to evaluate pipeline isolation and dead-ends.

The results of redundancy analysis identified several critical valves and a few sections of pipeline requiring more than five valves to isolate. The addition of system valves was proposed to reduce valve criticality and pipe isolation. Additional proposed pipeline looping was identified to address dead-ends. An additional booster pump station is associated with one pipeline project. Some of the improvements identified to reduce customer isolation were also utilized to address low pressures and fire flows within the previously described system analysis modeling effort as part of the overall Comprehensive Plan Update. Generally, the District's system has excellent redundancy.

A workshop with the District was held to review the areas without redundancy and identify proposed solutions. Four categories were developed for the replacement or installation of pipes that would improve the overall redundancy of the system. The four categories are District funded CIP within 10 years, District funded CIP in the 10 to 20-year timeframe, developer driven projects within 10 years, and developer driven in the 10 to 20-year period. The projects are displayed in Figures 3-16 and 3-17.

Following completion of the redundancy analysis, as the capital plan was refined to prepare Chapter 8, the projects that were identified above to serve "dead-ends" were characterized as extensions to un-served or under-served parcels, as distinct from projects that would create a loop in the distribution system, and thus redundancy for service. Those projects that only will be system extensions are presented in Chapter 8 as part of the future connectivity and extension project, rather than a redundancy project as initially considered in the analysis described above.

Independent of the distribution system redundancy analysis summarized above, the

District had previously completed a *Seismic Vulnerability Assessment Report* (SVAR, April 2014). The SVAR recommended installing a new seismic-resistant pipeline from Well 9 to the 297 Tank, to support having as much of the water system operational as possible following a seismic event. The District then commissioned a more detailed evaluation of alternatives for the recommended pipeline. The 2017 Seismic Pipeline Study from Well 9 to 650 Zone concluded that a pipeline and booster pumping station project was the best alternative. The project requires approximately 4,865 feet of 16-inch transmission main from Well 9 north to, then northeasterly along, SE Issaquah-Fall City Road, to SE Black Nugget Road. The booster pump station would be located at a suitable location to be determined along SE Issaquah-Fall City Road. These reliability improvements have been included as a recommended additional transmission main project in the CIP.

This page intentionally left blank.

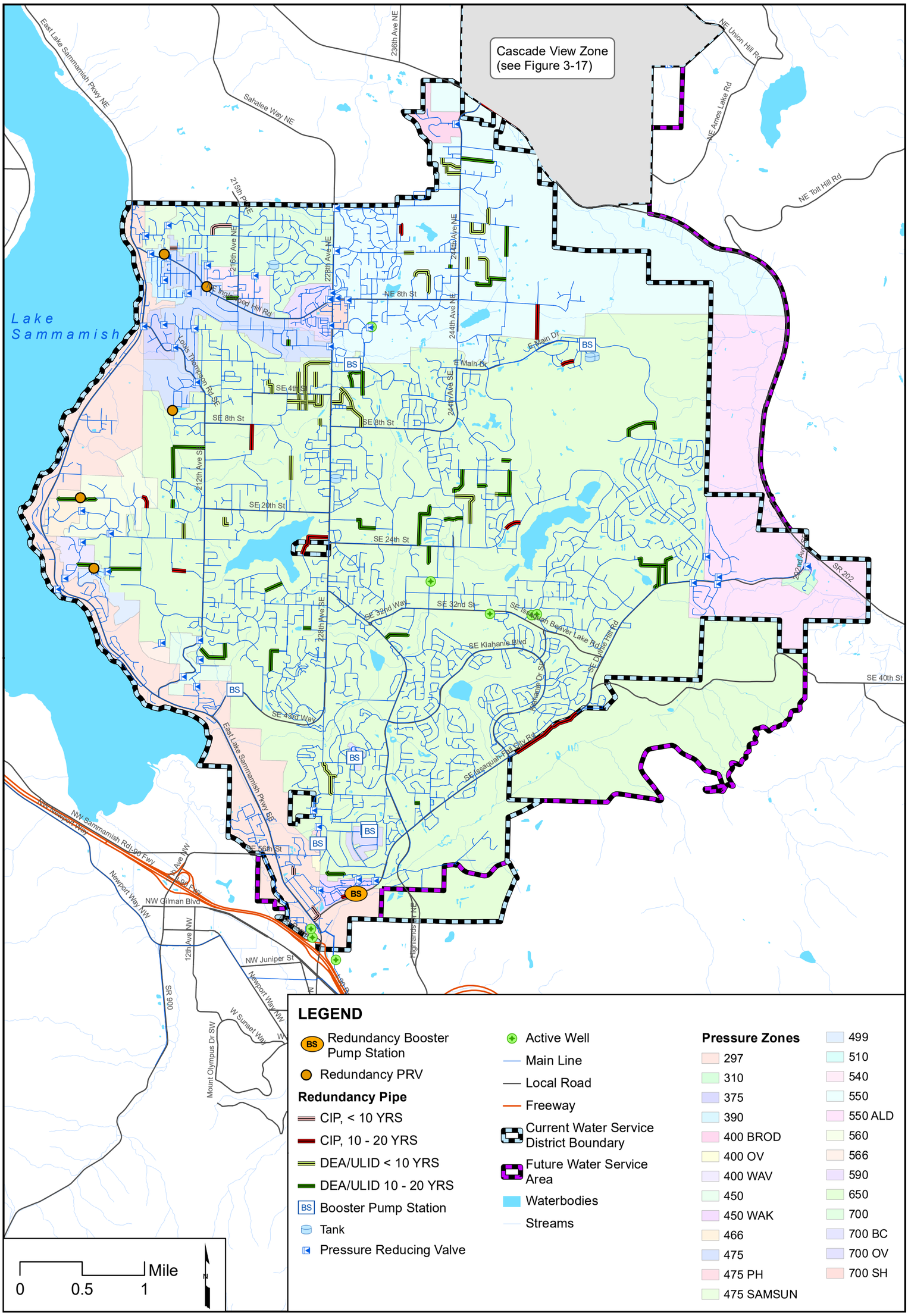

CHS ENGINEERS

Sammamish Plateau Water

Redundancy Projects
Plateau Zone
FIGURE 3-16
Water Comprehensive Plan

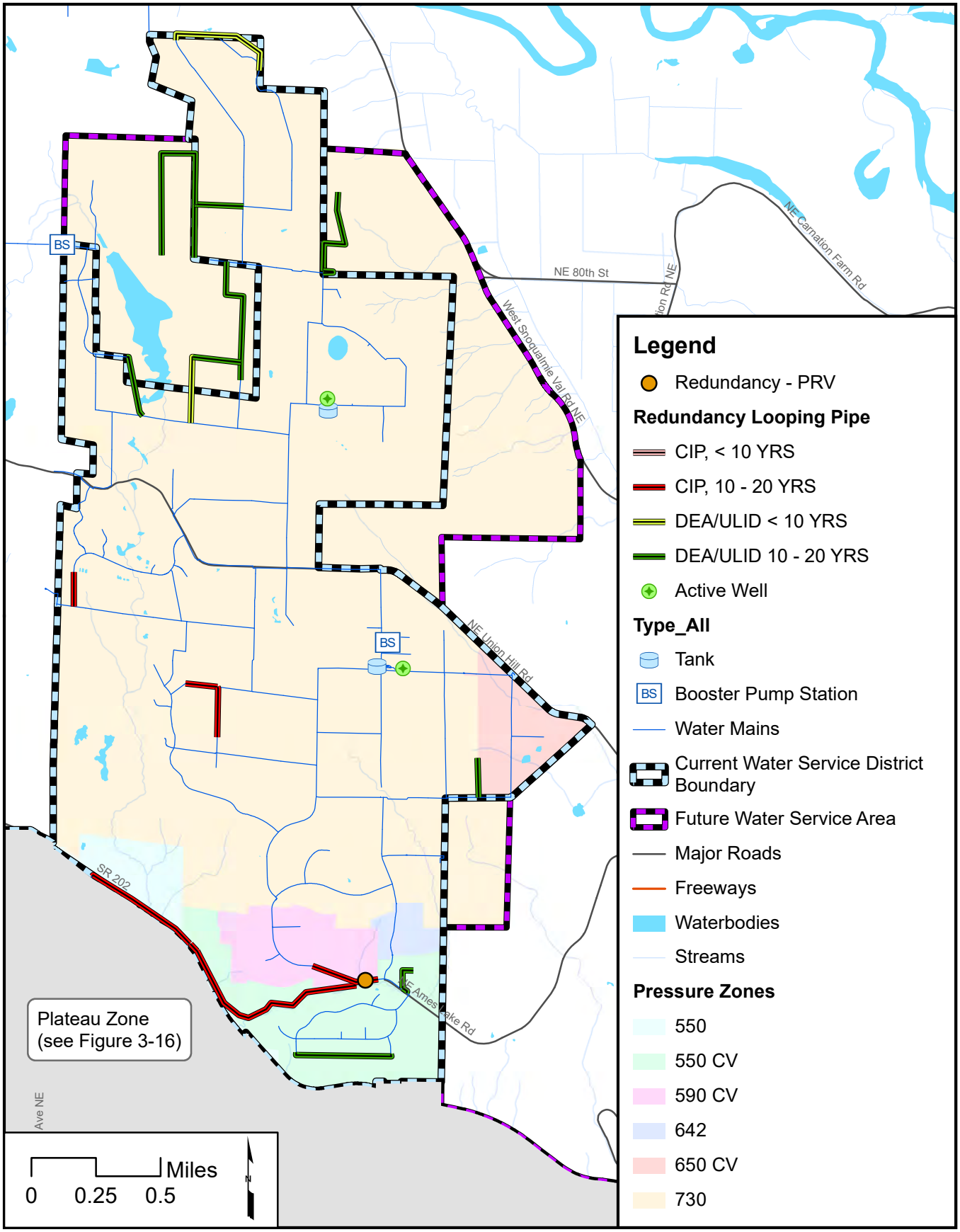

CHS ENGINEERS

Sammamish Plateau Water

Redundancy Projects Cascade View Zone

FIGURE 3-17

Water Comprehensive Plan

This page intentionally left blank.

CHAPTER FOUR – CONSERVATION PROGRAM, SUPPLY ANALYSIS, WATER RIGHTS, SYSTEM RELIABILITY, AND INTERTIES

This page intentionally left blank.

4. Conservation Program, Supply Analysis, Water Rights, System Reliability, and Interties

Table of Contents

4.1 Conservation Program……...4-1
4.1.1 Conservation History…… 4-1
4.1.2 Conservation Requirements and Compliance Summary……4-2
4.1.3 Historical Conservation Program……4-6
4.1.3.1 Measures ……4-6
4.1.3.2 Savings Achieved by Historical Program……..4-22
4.1.4 Conservation Program for 2014-2019……..4-27
4.1.4.1 Goal……..4-27
4.1.4.2 Conservation Measures……4-30
4.1.4.3 Estimated Savings and Budget……4-35
4.1.4.4 Impact on Demand…… 4-42
4.2 Source of Supply Strategy……..4-46
4.3 Water Rights Evaluation……..4-48
4.4 Aquifer Storage and Recovery Program……4-55
4.4.1 Overview…… 4-55
4.4.2 Program Objectives…… 4-57
4.4.3 Interpretation of Storage and ASR Program Success…….. 4-58
4.5 Water System Reliability……..4-59
4.5.1 Source Reliability……4-59
4.5.1.1 Plateau Zone…….....4-59
4.5.1.2 Cascade View Zone……4-60
4.5.2 Distribution System Reliability…….. 4-60
4.6 Interties……4-60

Tables

4-1 Water Use Efficiency Rule Requirements and District Compliance……4-3
4-2 Historical Conservation Program……..4-7
4-3 Single Family Rates (Effective January 1, 2019): Fixed Base Rates…… 4-13
4-4 Single Family Rates (Effective January 1, 2019): Increasing Block Consumption Rates…….. 4-14
4-5 Rates for Multifamily Customer Classes (Effective January 1, 2019)……..4-14
4-6 Rates for Public Institutional, Commercial and Industrial Classes (Effective January 1, 2019)……4-15
4-7 Rates for Irrigation Customer Classes (Effective January 1, 2019)……..4-15
4-8 Annual Consumption for the years 1994-2017 (Includes all authorized billed and unbilled consumption 2006-2017)……..4-23

4-9 Peak Summer Consumption for 1994-2017 (for the months of June, July, August and September ……4-26
4-10 2014-2019 Future Conservation Program ……...4-29
4-11 Savings and Cost Summary……4-36
4-12 Savings Schedule and Impact on Average Demand …….....4-44
4-13 Savings Schedule and Impact on Peak Season Demand ....……..…….4-45
4-14 Water Rights Self-Assessment – Plateau Zone……..…….4-50
4-15 Water Rights Self-Assessment – Cascade View Zone……..…….4-53
4-16 ASR Injection Volume and Recovery Compared to Existing Water Rights….4-56

Figures

4-1 Number of Customers (as ERUs) Compared to Annual Consumption 1994-2017……..4-25
4-2 Number of Customers (as ERUs) Compared to Peak Consumption (June-September) 1994-2017…… 4-27
4-3 Savings by Sector (annual average)…… 4-40
4-4 Savings by Sector (peak season)…….. 4-40
4-5 Indoor vs. Outdoor Savings (annual average)…… 4-41
4-6 Indoor vs. Outdoor Savings (peak season)…….. 4-41
4-7 Hardware vs. Behavior Savings (annual average)…….. 4-42
4-8 Hardware vs. Behavior Savings (peak season)……... 4-42

4. Conservation Program, Supply Analysis, Water Rights, System Reliability, and Interties

The Sammamish Plateau Water and Sewer District (District) has experienced a continual, and sometimes dramatic, growth since the early 1980s. To keep pace with the increasing demands for water supply, the District had previously attempted to obtain additional groundwater rights. However, the regulatory climate made it difficult to obtain new water rights, so the District identified a connection to a regional water supply as that additional source of supply.

The District is a member of the Cascade Water Alliance (Cascade), which is a consortium of seven water utilities in King County providing drinking water to 350,000 residences and 20,000 businesses. Cascade has an agreement with Seattle Public Utilities (SPU) to utilize SPU's regional surface water supply from the Cedar and Tolt River watersheds. The District began using SPU's regional supply in 2005. Cascade's future plans include the development of the water supply at Lake Tapps.

Cascade implements water use efficiency programs on behalf of its members. The District pays dues to Cascade that are specifically earmarked for its conservation programs. In addition, the District has a few independent conservation programs, such as the irrigation audit program.

4.1 Conservation Program

4.1.1 Conservation History

The District has a long history of implementing conservation measures. The District's current conservation program was originally developed and implemented locally by District staff starting in 1992. Recognizing a need to enhance water use efficiency among its customers, the District created a Conservation Specialist position in 1999 to grow and enhance the existing program.

Starting in July of 2004, the District participated in the regional conservation program administered by the Cascade Water Alliance. Cascade developed a Conservation Potential Assessment to review the savings generated by various conservation methods. The outgrowth of the Assessment was the development of the 2008-2013 Water Conservation Program. This program described Cascade's overall conservation goal, developed to meet the requirements of the 2003 Municipal Water Law's Water Use Efficiency (WUE) Rule. The program tracked both utility-specific as well as Cascade's regional conservation goals and included measures to attain that goal. The District used this document when planning its own conservation goal to meet the requirements of the WUE Rule. Some of the regional Cascade measures replaced historic local District measures, while other measures augmented the District's conservation program. Thus, the District's conservation program in recent years has been a combination of local and regional measures.

During 2008-2013, the Department of Health's (DOH) initial six-year period for required water use efficiency goals, the District adopted an official goal to save 129,000 gallons per day on an average annual basis. DOH then required utilities to set new goals moving forward. In 2013, Cascade saw an opportunity to set one regional goal on behalf of its seven members, rather than have each member utility set individual goals and create measures. Cascade worked directly with DOH and obtained the necessary permission from DOH staff to create one goal for its seven members. The result of this effort was the new Cascade goal for the 2014-2019 period, which is discussed in more detail in Section 4.1.4.

4.1.2 Conservation Requirements and Compliance Summary

The State of Washington revised its water conservation planning requirements as a result of the 2003 Municipal Water Law. An outgrowth of that law is the WUE Rule, finalized in January 2007. The WUE Rule has several requirements and corresponding compliance dates. Some of the requirements are associated with water system plans, while other requirements are independent of the six- to ten-year water system planning cycle.

Table 4-1 lists the requirements of the WUE Rule and shows that the District is currently in compliance or is on track to be in compliance for activities where compliance will be determined at a future date. There are seven main categories of requirements under the WUE Rule: 1) meters, 2) data collection, 3) distribution system leakage, 4) goals, 5) efficiency program, 6) demand forecast, and 7) performance reports.

Table 4-1
Water Use Efficiency Rule Requirements and District Compliance

Category, WAC Section and Compliance Date	New Requirement	District in Compliance?
1. Meters 246-290-496 Fully metered by January 22, 2017. Submit metering plan by July 1, 2008.	1. Meter all **sources.**	**Yes,** all wells and regional supply connections are metered.
	2. Meter all **service connections.**	**Yes,** all service connections are metered.
	3. For systems **not fully metered**: Create meter installation plan, perform activities to minimize leakage until fully metered, and report annually on installation and leak minimization actions.	**N/A**, since the District is fully metered.
2. Data Collection 246-290-100 WSPs submitted after January 22, 2008.	1. Provide monthly and annual **production and purchase** numbers for each source.	**Yes**, provided in Chapter 2.
	2. Provide annual **consumption** by customer class.	**Yes**, provided in Chapter 2.
	3. Provide "**seasonal variations**" consumption by customer class.	**Yes**, provided in Chapter 2.
	4. Provide annual quantity **supplied to other public water systems.**	**Yes**, provided in Chapter 2.
	5. Evaluate **reclaimed water** opportunities.	**Yes,** provided in Section 4.2.
	6. Consider water use efficiency **rate structure.**	**Yes,** the District's rate structure includes inverted block rates and seasonal rates. See Section 4.3.1.

Table 4-1 (cont.)
Water Use Efficiency Rule Requirements and District Compliance

Category, WAC Section and Compliance Date	New Requirement	District in Compliance?
3. Distribution System Leakage 246-290-820 First report completed by July 1, 2008. First compliance determination made by July 1, 2010.	1. **Calculate** annual volume and percent using formula defined in the Rule.	**Yes.** The District's 2016 distribution system leakage was 5.29% and the 2014-2016 average was 6.60%. The leakage information is reported in Chapter 2. The District has been in compliance with the distribution system leakage standard since the first compliance determination in 2010.
	2. **Report** annually: annual leakage volume, annual leakage percent, and for systems not fully metered, meter installation progress and leak minimization activities.	
	3. Develop water loss control **action plan** (if leakage is over 10% for 3-year average).	
4. Goals246-290-830 Goals established by January 22, 2008.	1. **Establish** measurable (in terms of water production or usage) conservation goals and re-establish every 6 yrs. Provide schedule for achieving goals.	**Yes,** measurable goals have been established via a public process. See Section 4.4.1.
	2. Use a **public process** to establish goals.	
	3. **Report** annually on progress.	The District has sent goal progress reports to the DOH and customers since July 2008.

Table 4-1 (cont.)
Water Use Efficiency Rule Requirements and District Compliance

Category, WAC Section and Compliance Date	New Requirement	District in Compliance?
5. Efficiency program 246-290-810 WSPs submitted after January 22, 2008.	1. **Describe existing** conservation program.	**Yes**, see Section 4.3.
	2. **Estimate water saved** over last 6 years due to conservation program.	**Yes**, see Section 4.3.2.
	3. Describe conservation **goals.**	**Yes,** see Section 4.4.1.
	4. Implement or evaluate **1-12 measures**, depending on size.	**Yes,** the District is required to implement or evaluate 9 measures. The District has chosen to implement 19 measures. See Section 4.4.
	5. Describe conservation **programs for next 6 years**, including schedule, budget, and funding mechanism.	**Yes**, see Section 4.4
	6. Describe how customers will be **educated** on efficiency practices.	
	7. Estimate **projected water savings** from selected measures.	
	8. Describe how efficiency program will be **evaluated** for effectiveness.	
	9. Estimated **leakage from transmission lines** (if not included in distribution system leakage).	**N/A**, the District does not have a separate transmission system.

Table 4-1 (cont.)
Water Use Efficiency Rule Requirements and District Compliance

Category, WAC Section and Compliance Date	New Requirement	District in Compliance?
6. Demand Forecast 246-290-100 WSPs submitted after January 22, 2008.	1. Provide demand forecast reflecting **no additional conservation.**	**Yes,** provided in Chapter 2.
	2. Provide demand forecast reflecting **savings from efficiency program.**	
	3. Provide demand forecast reflecting **all "cost effective" evaluated measures.**	**N/A**, since the District is implementing the required minimum number of measures (9), this forecast is not relevant.
7. Performance Reports 246-290-840 First report completed by July 1, 2008.	1. **Develop** annual report including goals and progress towards meeting them, total annual production, annual leakage volume and percent, and, for systems not fully metered, status of meter installation and actions taken to minimize leakage.	**Yes**, the District has reported annually on progress towards water use efficiency goals since July 2008.
	2. Submit annually by July 1 to DOH and customers and make available to the public.	

4.1.3 Historical Conservation Program

4.1.3.1 Measures

A summary of the conservation measures the District has implemented in the last sixteen years is shown in Table 4-2. The table includes both local measures implemented by District staff and regional measures implemented by the Cascade Water Alliance. The measures encompass both supply-side and demand-side activities. In 2016, the District paid $109,100 in conservation dues to the Cascade Water Alliance to implement conservation programs for the District.

Table 4-2
Historical Conservation Program

Measure	Grouping	Sectors			Years Implemented																	Local or Regional
		Single Family Residential	Multi-Family Residential	Non-Residential	2001	2002	2003	2004	2005	2006	2007	2008	2009	2010	2011	2010	2013	2014	2015	2016	2017	
1. Source Meters	Operational	n/a	n/a	n/a	X	X	X	X	X	X	X	X	X	X	X	X	X	X	X	X	X	Local
2. Service Meters		X	X	X	X	X	X	X	X	X	X	X	X	X	X	X	X	X	X	X	X	Local
3. Distribution System Leak Detection and Repair		n/a	n/a	n/a	X	X	X	X	X	X	X	X	X	X	X	X	X	X	X	X	X	Local
4. Flushing Management		n/a	n/a	n/a	X	X	X	X	X	X	X	X	X	X	X	X	X	X	X	X	X	Local
5. Technical Studies	Behavioral	n/a	n/a	n/a	X	X	X	X	X	X	X	X	X	X	X	X	X	X	X	X	X	Local & Regional
6. Technical Assistance		X	X	X	X	X	X	X	X	X	X	X	X	X	X	X	X	X	X	X	X	Local & Regional
7. Conservation Pricing		X	X	X	X	X	X	X	X	X	X	X	X	X	X	X	X	X	X	X	X	Local
8. Bills Showing Consumption History		X	X	X	X	X	X	X	X	X	X	X	X	X	X	X	X	X	X	X	X	Local
9. School Education Programs		X	X	n/a	X	X	X	X	X	X	X	X	X	X	X	X	X	X	X	X	X	Local & Regional
10. Public Outreach		X	X	X	X	X	X	X	X	X	X	X	X	X	X	X	X	X	X	X	X	Local & Regional
11. Toilet leak detection and repair		X	X	X	X	X	X	X	X	X	X	X	X	X	X	X	X	X	X	X	X	Local & Regional

Table 4-2 (cont.)
Historical Conservation Program

Measure	Grouping	Sectors			Years Implemented																	Local or Regional
		Single Family Residential	Multi-Family Residential	Non-Residential	2001	2002	2003	2004	2005	2006	2007	2008	2009	2010	2011	2010	2013	2014	2015	2016	2017	
12. Decreased shower use	Behavioral (cont.)	X	X		X	X	X	X	X	X	X	X	X	X	X	X	X					Local & Regional
13. Decreased toilet flushing		X	X		X	X	X	X	X	X	X	X	X	X	X	X	X	X	X	X	X	Local & Regional
14. Eliminate partial clothes washers loads		X	X		X	X	X	X	X	X	X	X	X	X	X	X	X					Local & Regional
15. Decreased faucet use		X	X					X	X	X	X	X	X	X	X	X	X	X	X	X	X	Local & Regional
16. Cascade audits for automatic irrigation		X		X					X	X	X	X	X									Regional
17. SPW Irrigation Audit Program				X	X	X	X	X	X	X	X	X	X	X	X	X	X	X	X	X	X	Local
18. Allow lawn to go dormant		X	X	X	X	X	X	X	X	X	X	X	X	X	X	X	X					Local & Regional
19. Items Distributed		X	X					X	X	X	X	X	X	X	X	X	X	X	X	X	X	Regional

Table 4-2 (cont.)
Historical Conservation Program

Measure	Grouping	Sectors			Years Implemented																	Local or Regional
		Single Family Residential	Multi-Family Residential	Non-Residential	2001	2002	2003	2004	2005	2006	2007	2008	2009	2010	2011	2010	2013	2014	2015	2016	2017	
20. Water Efficient Toilets	Indoor Hardware	X	X	X	X	X	X	X	X	X	X	X	X	X	X	X	X	X	X	X	X	Local & Regional
21. Bathroom and kitchen faucet aerators		X	X	X								X	X	X	X	X	X	X	X	X	X	Regional
22. Showerheads		X	X		X	X	X	X	X	X	X	X	X	X	X	X	X	X	X	X	X	Local & Regional
23. Water Efficient Clothes Washers		X	X	X	X	X	X	X	X	X	X	X	X	X	X	X	X	X	X	X	X	Local & Regional
24. Water Efficient Dishwashers		X	X					X	X	X	X	X	X	X	X	X	X	X	X	X	X	Regional
25. Water Efficient Urinals			X	X				X	X	X	X	X	X	X	X	X	X	X	X	X	X	Regional
26. Pre-rinse spray heads								X	X	X	X	X	X	X	X	X	X	X	X	X	X	Regional
27. Efficient Food Steamers				X				X	X	X	X	X	X	X	X	X	X	X	X	X	X	Regional
28. ET controllers	Outdoor Hardware	X	X	X								X	X	X	X	X	X	X	X	X	X	Regional
29. Rain sensors			X	X								X	X	X	X	X	X	X	X	X	X	Regional

OPERATIONAL MEASURES

Operational measures are measures that each utility implements when operating its facilities in order to use water efficiently and monitor District water use.

1. Source Meters

Source meters are a critical conservation tool since accurate water production and use data provides information used in developing conservation priorities, goals, and programs. The District has source meters at all current production wells and includes meters on all new source facilities. The District tests and calibrates the meters on a bi-annual basis. The District installed new meters on all source water supplies in the years 2014-2016.

2. Service Meters

Service meters are a key component of providing accurate water consumption information for use in conservation planning. Service meters also provide a means of supplying information to customers and applying rates on a commodity-use basis. The District has meters on all service connections and implements a comprehensive calibration and replacement program.

The District's historical demand-side leak detection program consisted of identifying customer leaks, notifying and following up with customers. This included a leak adjustment policy to encourage prompt leak repair. Using hand-held meter reading devices, field service representatives were alerted to possible leaks via an alarm that sounded when an abnormally high reading was found, or by observing a spinning leak indicator at a customer meter. In addition, during bill preparation the billing system identified customers with abnormally high consumption. Customer notification and follow up occurred through various means, including doorhangers, email, mailings, and phone calls. The District's leak adjustment policy reduced a portion of the charge by 50% only for the billing period during which a leak was repaired, thus encouraging prompt repair.

In 2016 and 2017, the District installed AMI "smart" meters on all service connections. The addition of AMI meters is changing the customer leak identification and notification practices as described in Conservation Program Section 4.1.4.2.

3. Distribution System Leak Detection and Repair

Water utilities that operate efficient physical systems to minimize leaks demonstrate a strong commitment to sound financial and resource management. The District's 2015-2017 rolling three-year average for its distribution system leakage was 5.50% of production. This result is within the 10% or less requirement of the WUE Rule. It demonstrates that the District continues to manage distribution leaks within its system. In 2015, the District's leakage percentage was 6.45%, decreasing to 5.29% in 2016 and to 4.77% in 2017 due to efficiencies in operational practices and improved tracking by field staff of nonrevenue water use.

District Water Operations staff completed a supply-side leak detection and repair program from 2013 – 2016 and repaired all identified leaks. Over the last 4 years, the District

performed leak detection on just over 1 million feet of water main, or two-thirds of the 300 miles of the District's water mains. District staff promptly repairs all reported leaks as soon as they are identified in the water system.

4. Flushing Management

The District practices ongoing water quality flushing for certain portions of the distribution system, as well as start-up flushing for new pipes. The vast majority of flushing water is now metered rather than estimated. The District has tracked flushing water data since 2005. The District utilizes the American Water Works Association (AWWA) Water Loss Control model as a basis for tracking all nonrevenue water, including flushing water. Flushing water is considered authorized but unbilled consumption and is subtracted from the total amount of water produced when calculating the DOH annual distribution leakage totals.

While flushing is a standard practice performed by many water utilities, the District has looked for ways to reduce the amount of water used for flushing. The District most frequently flushes water mains in dead end areas, so the District works to reduce the number of dead ends from the existing system and limits installing them in new construction projects.

BEHAVIORAL MEASURES

Behavioral measures use social marketing techniques to encourage customers to take actions to use water efficiently and prevent water waste. Many utilities implement these types of measures, and customers have reported that they have used them. It is difficult to quantify water savings for behavioral measures, and although employed, any savings achieved are not measured directly but instead the results are estimated.

5. Technical Studies

The District has been an active participant in commissioning and funding studies to understand regional water resource issues. The District has funded a comprehensive groundwater modeling study, which helped staff comprehend the groundwater hydrology within the District's service area. The District works with Cascade Water Alliance to fund studies, such as Cascade's 2005 Conservation Potential Assessment, which analyzed conservation opportunities in Cascade's service area. The District has investigated the feasibility of using reclaimed water within the District for irrigation, wetlands enhancement, groundwater recharge, and commercial and industrial applications. Refer to the discussion in Section 4.2 for more information on the use of reclaimed water.

6. Technical Assistance

The District has provided technical assistance to the City of Sammamish Parks Department, the Issaquah and Lake Washington School Districts and various commercial entities and homeowner's associations concerning irrigation efficiency. District staff has researched and provided information on computerized central control irrigation systems, weather-based irrigation systems, rain sensors, and soil sensors to these entities to assist them with improved irrigation efficiency of their large landscapes. The District permitted the City of Sammamish to install a communications antenna on a District water tank for their computerized central control system. Cascade has also increased its presence in

providing technical assistance to District customers, particularly those in the commercial and public institutional sectors.

Cascade conducted the following technical assistance programs on behalf of the District:

- ***Water Conservation for Real Estate Professionals.*** Cascade held a water conservation workshop for real estate professionals at 21 Acres in Woodinville in 2015 and 2016. The workshop focus was water efficient irrigation systems.
- ***EcoPro Sustainable Landscapes Training Certification.*** This training was held at Lake Washington Technical College's Irrigation Learning Lab. The study materials and exam are based on over 200 sustainable best practices, including efficient irrigation systems. Programs were held in 2014 – 2016.
- ***Washington State Nursery and Landscape Association Trainings.*** Cascade works in partnership with WSNLA to incorporate smart irrigation practices and techniques in their training workshops. Workshops were held in 2015 and 2016.
- ***King County Housing Authority.*** King County Housing Authority (KCHA) and Cascade continue working together installing showerheads and aerators at their older properties. Installations occurred in 2015 and 2016.
- ***Cascade WaterSense New Homes Program.*** Cascade created a partnership with Built Green in 2015 to provide training and promotion of its WaterSense New Homes program. WaterSense certified homes use efficient products, fixtures and technologies, and emphasize good soil and appropriate plants in the landscape. A WaterSense home will use approximately 20% less water than a comparable home without these features.

7. Conservation Pricing

Water utilities can use rates to encourage demand side consumption reduction by customers. Rates typically consist of a fixed charge and a variable charge. Customers pay the fixed charge, also known as the base charge, regardless of the amount of water consumed. The District applies variable rate charges according to the volume of water consumed. When the unit price for water increases as consumption increases, it sends a signal to customers to conserve, and most customers do respond to this price signal.

There are four basic rate structures for the variable charge: uniform, declining block, increasing block, and seasonal. Both increasing blocks and seasonal rates are considered to be conservation pricing. Increasing blocks charge more per unit of consumption with additional consumption. Seasonal rates charge more per unit of consumption during the peak season. Increasing block rate and seasonal rates are implemented for non-single-family customers.

The District first implemented conservation pricing in its rate structure through increasing blocks and seasonal rates in the 1980s. The single-family fixed and increasing blocks are shown in shown in Table 4-3 and 4-4. Other customer sectors use seasonal rates, as shown in Table 4-5 through 4-7. The District estimates an average rate increase of 3% annually over the next ten-year period.

In response to consecutive years of low water sales and related revenue shortfalls, the

District's Board of Commissioners made a policy decision in late 2011 to target a higher level of cost recovery through fixed charges. This policy decision was proposed to improve revenue stability, recognizing that the majority of utility costs are fixed and do not vary with the amount of water used. The District sets its single-family water rates to target 60% cost recovery through fixed charges. System-wide, the District recovers almost 52% of its water utility costs through fixed charges.

Additionally, the District's practice of having a separate billing category for irrigation and charging more per unit for irrigation than other customer categories sends a pricing signal for customers who are not in the single-family residential class to be efficient with landscaping and irrigation practices. Finally, irrigation customers who actively participate in the District's Irrigation Audit Program receive a discounted rate if they have their irrigation systems audited by a Certified Irrigation Auditor and meet certain program criteria, including meeting an annual water allowance and fixing leaks promptly. The combined savings of the discounted rate and more efficient irrigation systems serves as motivation for customers to participate in the program.

Table 4-3.
Single Family Rates (Effective January 1, 2019): Fixed Base Rates

SF Customers – Fixed Base Rates		
Meter Size	**Monthly Fixed Charge**	**Bi-Monthly Fixed Charge**
3/4" Meter	$30.87	$61.74
1" Meter	$66.28	$132.56
1-1/2" Meter	$125.29	$250.58
2" Meter	$196.11	$392.22
3" Meter	$384.93	$769.86
4" Meter	$597.39	$1,194.78

Table 4-4
Single Family Rates (Effective January 1, 2019): Increasing Block Consumption Rates

SF Customers - Increasing Block Consumption Rates			
Rate Block 1			
	Cubic Feet	**Gallons**	**Cost Per 100 CF**
Monthly	0-600	0-4,488	$2.02
Bi-Monthly	0-1,200	0-8,976	$2.02
Rate Block 2			
	Cubic Feet	**Gallons**	**Cost Per 100 CF**
Monthly	601-1,200	4,489-8,976	$2.46
Bi-Monthly	1,201-2,400	8,977-17,952	$2.46
Rate Block 3			
	Cubic Feet	**Gallons**	**Cost Per 100 CF**
Monthly	1,201-2,500	8,977-18,700	$3.98
Bi-Monthly	2,401-5,000	17,953-37,400	$3.98
Rate Block 4			
	Cubic Feet	**Gallons**	**Cost Per 100 CF**
Monthly	>2,500	>18,701	$6.63
Bi-Monthly	>5,000	>37,401	$6.63

Table 4-5
Rates for Multifamily Customer Classes (Effective January 1, 2019)

MF Customers Fixed Base Rates	
Monthly Fixed Charge Per Unit	**Bi-Monthly Fixed Charge Per Unit**
$17.92	$35.84
MF Customers – Seasonal Consumption Rates	
Season	**Rate per 100 cubic feet (748 gallons)**
November through June	$1.63
July through October	$2.40

Table 4-6

Rates for Public Institutional, Commercial and Industrial Classes (Effective January 1, 2019)

Public Institutional, Commercial, and Industrial Rates (ICI) Fixed Base Rate		
Meter Size	**Monthly Fixed Charge**	**Bimonthly Fixed Charge**
3/4" Meter	$30.87	$61.74
1" Meter	$66.28	$132.56
1 1/2" Meter	$125.29	$250.58
2" Meter	$196.11	$392.22
3" Meter	$384.93	$769.86
4" Meter	$597.39	$1,194.78

Public Institutional, Commercial, and Industrial Rates (ICI) Seasonal Consumption Rates	
Season	**Rate per 100 cubic feet (748 gallons)**
November through June	$1.63
July through October	$2.40

Table 4-7

Rates for Irrigation Customer Classes (Effective January 1, 2019)

Irrigation Water Rates Fixed Base Rate		
Meter Size	**Monthly Fixed Charge**	**Bi-Monthly Fixed Charge**
3/4" Meter	$30.87	$61.74
1" Meter	$66.28	$132.56
1-1/2" Meter	$125.29	$250.58
2" Meter	$196.11	$392.22
3" Meter	$384.93	$769.86
4" Meter	$597.39	$1,194.78

Seasonal Consumption Rates	
Standard Irrigation (Unaudited)	
Season	**Rate per 100 cubic feet (748 gallons)**
November through June	$10.87
July through October	$11.28

Table 4-7 (cont.)
Rates for Irrigation Customer Classes (Effective January 1, 2019)

Irrigation with Audit	
Season	**Rate per 100 cubic feet (748 gallons)**
November through June	$6.44
July through October	$6.63

8. Bills Showing Consumption History
Customer bills providing historical consumption data allow customers to understand how their use varies throughout the year as well as from year to year. This information helps customers make informed choices about how they manage their water use, including reducing their water usage. Additionally, unexpected increases in use can alert customers to possible leaks. The District's customer bills have included historical use data since 1989. The bills include a bar graph showing water use for the previous 12 months, which can be helpful in showing customers the difference between their summer and winter water use. The new on-line customer portal being implemented as part of the new AMI meter program will allow customers to view their consumption history by month, week, day and by hour for chosen days.

9. School Education Programs
For many years, Sammamish Plateau Water provided water education programs at no cost for schools within its service area using in-house staff. In 2012, the District transferred education program implementation to Cascade, and the programs are funded by part of the District's conservation dues paid to Cascade. Cascade works with its educational consultant Nature Vision whose staff presents the programs in the classroom. The primary target audience is grades K-12 and includes individualized learning programs for high school students and programs for college and graduate level students. District staff members continued to present at local science fairs and conduct site tours to youth groups such as the Girl Scouts. Starting in 2017 the District has also been interacting with many Lego Robotics groups.

Through Cascade, the District provides education programs to students in both the Issaquah and Lake Washington school districts as well as private schools within our service territory. The programs teach students about concepts such as the water cycle, water supply and conservation, groundwater dynamics, watersheds, and water pollution. The programs motivate students to make informed water resource choices, such as conserving water and protecting water quality.

The District was a partner in the Sammamish Watershed Festival from 2002 until the event dissolved in 2016. The festival was an annual event providing water and watershed education for fourth grade students throughout east King County. The site location was previously Beaver Lake Park in Sammamish but moved to the Brightwater Education Center in 2012. Session topics included water supply and conservation, groundwater and surface water pollution prevention, native plants, hazardous waste, recycling, and salmon ecology. The event reached an average of 700 students annually.

Other Cascade Water education programs held on behalf of the District include the following:

- ***Teacher Fellows Program.*** The Teacher Fellows program recruits master teachers from Bellevue, Issaquah, Lake Washington, and Tukwila school districts to design water-based curricula for inclusion into their respective districts. The first group of Teacher Fellows completed the program in 2016.

- ***Lake Washington Institute of Technology Environmental Horticulture Training.*** Students enrolled in the Environmental Horticulture Program at LWIT in Kirkland learned smart watering techniques utilizing the Irrigation Learning Lab created by Cascade. Students were taught the basics of controller scheduling and programing, irrigation system evaluation, and sprinkler head replacement. This training was conducted from 2014 – 2016.

10. Public Outreach

The District has implemented a number of public outreach activities aimed at conveying water conservation messages. These activities include the following:

- ***Cascade Gardener Programs.*** Through Cascade, the District has presented programs in the Cascade Gardener series. During 2017, Cascade presented 25 total programs throughout Cascade's service area, including two programs at the District. Topics included water efficient garden design and maintenance strategies, sustainable gardening, rain barrels and drip irrigation, and selecting the right plant for any given location.

- ***Water Efficient Landscaping Presentations.*** District staff has developed several presentations related to water efficient landscaping practices, including water efficient gardening and lawn care, and efficient operation and maintenance of irrigation systems. The District conducts presentations to homeowner associations, garden clubs, and other local community groups as needed.

- ***Sammamish Days.*** This is an annual event sponsored by the City of Sammamish. It celebrates the diverse cultures of the Sammamish area. Both the District and Cascade have booths at this event and distribute brochures and water conservation giveaways.

- ***Sustainable Sammamish.*** The Sammamish Chamber of Commerce sponsors this event, which has a strong focus on sustainable resource use. The District emphasizes water use efficiency and water quality protection during this event.

- ***Issaquah Salmon Days.*** The District has periodically participated in the annual Issaquah Salmon Days Festival. Past participation has included exhibiting conservation displays and marching in the Grande Parade. More than 200,000 people attend the event annually.

- ***District Newsletter.*** The District mails a quarterly newsletter to all customers. The District often includes an article on using water efficiently. Depending upon the season, articles focus on indoor or outdoor aspects of the District's conservation program, such as waterwise gardening tips. The District also posts the newsletter on its website.

- ***Annual Drinking Water Quality Report.*** Since the implementation of the Water Use Efficiency Rule in 2007, the District dedicates a full page in the water quality report to reporting the District's water conservation success and progress toward goals. This meets the WUE rule requirements on performance reporting to customers.

- ***Website.*** In 2016, the District completed a complete redevelopment of its website. There is now a web page dedicated to water use efficiency that includes conservation tips and links to water conservation brochures and useful websites.

- ***Social Media.*** The District maintains both Facebook and Twitter sites and staff place postings weekly that include water related topics, including water use efficiency.

- ***Cascade "We Need Water Because" Public Awareness Campaign.*** Cascade first implemented this public awareness campaign in 2014. The campaign included a large chalkboard that encouraged the public to write down their thoughts about the importance of water. Cascade staff set up a display booth and distributed brochures and conservation giveaway items as part of the campaign. The display continues to be utilized throughout member service areas each year.

- ***Cascade "Beautiful Landscapes through Smart Watering" DVD Series***. in 2010, Cascade developed three short irrigation DVDs that the District distributes to customers at public outreach events. The DVDs include "A Homeowner's Guide to Becoming Sprinkler Savvy," "Converting Sprinklers to Drip Irrigation," and "Setting a Sprinkler Schedule." Cascade also has a You Tube channel that currently includes 13 videos that promote water use efficiency.

- ***Brochures.*** The District has a number of brochures on water conservation that discuss indoor and outdoor water conservation practices. The District stocks the brochures at the front counter of the District's office, distributes them at events and sends them to customers who request conservation information. Topics include smart watering for customers with automatic irrigation systems, natural yard care, and using water wisely indoors.

- ***Water Efficient Demonstration Garden.*** The landscaping at the District office serves as a water efficient demonstration garden, showing customers that water efficient landscaping can be attractive. The landscaping consists of native and drought tolerant plant material. There is no irrigation system on the site. Selected plants are hand watered as needed during extreme drought conditions.

11. Toilet Leak Detection and Repair

The District has encouraged customers in all classes to repair toilet leaks promptly. From 2008-2014, Cascade Water Alliance mailed toilet dye strips to all of its single-family residential customers in an informational flyer with instructions on how to use the dye strips, and included coupons on discounts for toilet repair items such as flappers and fill valves.

12. Decreased Shower Use

Over the years, the District has encouraged customers to take shorter showers to save water. District staff has challenged students in both the classroom and at outreach events to take five-minute showers. District staff has also provided electronic shower timers to help customers shorten their showers, and these items have proven to be popular with parents of teenagers.

13. Decreased Toilet Flushing

This program encouraged customers to flush one less time per day by not using the toilet as a trash can or not flushing every time the toilet is used for liquid waste. The target audience was SF and MF customers that flush more than the average number of times.

14. Decrease Partial Clothes Washer Loads

The District wanted to help residential customers save water by washing full loads of laundry. A standard washer can use 34 - 43 gallons per load, and even water efficient machines use an average of 27 gallons per load. (Source: Water Use and Conservation by Amy Vickers.) The District encouraged customers to wash full loads of laundry, rather than just one or two items, in order to save water.

15. Decreased Faucet Use

This program encouraged customers to shorten their combined bathroom and kitchen faucet use by 2 minutes per day. The target audience was all SF and MF customers who ran the faucet longer than the average time.

16. Cascade Audits for Automatic Irrigation

Under the regional Cascade program, free irrigation audits were provided to both residential and nonresidential customers to improve the efficiency of their irrigation systems. The audits included identifying hardware and scheduling improvements, finding and repairing leaks, and providing information about techniques to improve water efficiency such as lawn aeration, mulching, and enhancing soil conditions. A certified landscape irrigation auditor conducted the audits. Auditors created irrigation schedules for the customers and taught them how to schedule their irrigation controllers. The program applied to customers with in-ground irrigation systems with automatic controllers, which reflects a large portion of where the District's irrigation water is used. The audits were conducted for residential customers from 2005-2008 and for nonresidential customers from 2004 - 2016. This program also included outdoor irrigation kits, irrigation evaluations and irrigation improvement projects.

17. SPW Irrigation Audit Program

The District has an Irrigation Audit Program aimed at promoting irrigation efficiency for multifamily and non-residential customers with dedicated irrigation meters. The program

includes a rate incentive (which is approximately half of the standard irrigation rate) to irrigation customers if they meet the following program criteria:

- Customers have their irrigation systems audited by an auditor certified by the Irrigation Association.

- Auditors identify hardware problems and repair leaks prior to the audit. After the system tune-up, the auditor measures distribution uniformity and provides customers with a recommended watering schedule for maximum water efficiency. Auditors also initially set the irrigation controller to reflect this schedule.

- Customers must maintain the irrigation system for maximum water efficiency, including leak detection, repair and appropriate irrigation controller scheduling.

- Customers must achieve a minimum 60% distribution uniformity (a measure of how efficiently the hardware waters the landscape) throughout the system.

- Customers must remain within an annual water allowance. This is calculated using industry standards and is based on the size of the landscaped area as well as the type of plant material in the landscape.

The program began in 1992 and the program policies and procedures were most recently revised in April 2017.

18. Allow Lawn to Go Dormant

The District encouraged customers to allow their lawns to go dormant during the dry summer months to help balance peak water use. The majority of outdoor watering occurs in the peak season months of June, July, August and September, when water supplies are at their lowest. Allowing lawns to go dormant gave customers a measure of control on how much water they were applying to their landscapes. Even if they allowed their lawns to go dormant, the District still encouraged watering at least once a month to minimize plant stress.

19. Items Distributed

Cascade distributed water efficient hardware at community events, through Cascade's website, and directly to its members so they could also distribute items to their customers. The targeted audience was SF and MF customers.

Indoor Hardware

20. Water Efficient Toilets

Cascade's toilet replacement program was highly successful, providing rebates for more than 10,000 toilets for its members, saving millions of gallons of water each year and changing the local market in favor of high efficiency fixtures. The toilet rebate program ended in 2012 due to a market transformation in the availability of water efficient toilets.

- ***1.6 gallons per flush toilet installation***

The Cascade regional program offered a partial toilet rebate for its member customers from 2004-2007 which was marketed to existing customers with pre-code toilets (3.5 – 7 gallons per flush) in the multifamily and non-residential sectors. The program provided rebates to customers who replaced less efficient toilets with 1.6 gallons per flush (gpf) toilets, which is the maximum allowed under the plumbing code. The target audience excluded new customers because newer homes were already built to include the 1.6 gpf models due to the 1992 plumbing code revisions.

- ***High Efficiency Toilets***

From 2008-2012, Cascade offered rebates for WaterSense 1.28 gpf toilets for all customer classes. 2,182 District customers received rebates for installing the WaterSense 1.28 gpf toilets. In addition to the single-family toilet rebates, Cascade provided direct installations of 1.28 gpf toilets for multifamily residential accounts.

21. Bathroom and Kitchen Faucet Aerators

The District provided free 1.0 gpm bathroom faucet aerators to customers. These bathroom faucet aerators were more efficient by 1.5 gpm than the 2.5 gpm maximum faucet aerators allowed under the plumbing code. Starting in 2004, Cascade has managed the implementation of the bathroom and kitchen faucet aerator program.

22. Showerheads.

The District provided free 2.0 and 1.5 gallon per minute (gpm) showerheads to customers since 2001 as a way to reduce indoor water use. Current plumbing code requirements for showerheads are 2.5 gpm, so the use of these efficient showerheads can reduce water use by ½ to one gallon per minute. Cascade has supported this program since 2008.

23. Efficient Clothes Washers

The District offered clothes washer rebates for the single-family sector from 2001-2004. The rebates motivated customers to replace less efficient clothes washers with more efficient models. Initially District staff administered the rebates and featured $50 rebates for “Energy Star” certified clothes washers that were also water efficient. When the Cascade conservation program came into effect in 2004, the District switched over to the Cascade clothes washer rebate that utilized a tiered system of higher rebates for more efficient models. The program ended in 2011 due to a market transformation in the production of water efficient frontloading washing machines.

24. Water Efficient Dishwashers

This program was targeted to all customer sectors starting in 2004. Water efficient models use 2.0 – 3.5 gallons per load (gpl) Conventional models use 7 – 14 gpl. Many of the water efficient dishwasher models are also energy efficient. This program has been implemented by Cascade.

25. Water Efficient Urinals

This program provided partial rebates for customers who replaced pre-code urinals with 1.0 gpf products starting in 2004. The target audience was existing ICI (Institutional, Commercial and Industrial) customers with pre-code urinals (1.5 – 5.0 gpf.) Cascade also offered rebates for waterless urinals and 0.5 gpf urinals. This program has been implemented by Cascade.

26. Pre-Rinse Spray Valves

Cascade implemented a commercial pre-rinse spray valve program for 1.5 gallon per minute spray heads in 2004 and 2005. The program was targeted at the District's ICI (Institutional, Commercial, and Industrial) customers. The program was updated in 2008-2016 with an even more efficient (1.0 gpm) spray valve. Pre-rinse spray valves were installed in commercial kitchens to rinse dishes prior to loading them into a dishwasher. Pre-rinse spray valves are roughly analogous to a faucet aerator, in that they control the volume of water used from a faucet. The program featured the direct installation of efficient spray valves in commercial facilities in the District's service area. Cascade and Puget Sound Energy managed it as a joint energy and water conservation program.

27. Food Steamers

Cascade implemented an efficient food steamers program in 2004. This program was targeted toward commercial customers, largely restaurant owners. Efficient connectionless steamers use less than 10% of the water when compared to boiler-based steamers, due to the elimination of condensate cooling water. Each steamer can save more than 50 gallons per hour and up to 500 gallons per day for a typical restaurant.

Outdoor Hardware

28. Evapotranspiration (ET) Controllers

Under the regional Cascade program, the District provided rebates to customers for the installation of ET controllers. These controllers use sensors to calculate evapotranspiration, which is the amount of water that either evaporates from the soil surface or is utilized by the plant. Based on local weather conditions, these "smart" controllers automatically adjust the irrigation schedule to deliver only enough water to meet plant needs. The program applied to customers with in-ground irrigation systems with automatic controllers. Rebates were provided to single family customers from 2004-2009, and to customers with dedicated irrigation systems in the commercial and public institutional rate classes, including homeowners' associations, from 2004-2017.

29. Rain Sensors

Under the regional Cascade program, the District provided rebates for rain sensors. These are devices that turn off automatic irrigation systems when it is raining, thereby minimizing excessive irrigation. The program is applicable to customers with in-ground irrigation systems with automatic controllers, which reflects a large portion of where the District's irrigation water is used. Cascade provided rebates to single-family residential customers from 2004 - 2012, and to customers with dedicated irrigation systems in the non-single-family rate classes from 2004 - 2017.

4.1.3.2 Savings Achieved by Historical Program

The District has reduced the average consumption per equivalent residential units (ERUs) consistently since 1994, although the number of ERUs has steadily increased each year due to growth and development of the District's service area. The ERU level is defined as the average amount of water used by a single-family residence. The District assigns a number of ERUs to each customer based on the size of the customer's water meter. Since

single-family customers typically use ¾-inch meters, that meter size is assigned one ERU. Larger meters are assigned more ERUs based on a weighting factor determined by using American Water Works Association (AWWA) capacity ratings.

Framing the discussion of savings in terms of ERUs is appropriate for two reasons. First, focusing on the water use per ERU normalizes for growth, as well as for the various different meter sizes and customer classes. The District continues to grow, and gauging conservation savings in terms of total production may not be appropriate. Utilities can experience an increase in total production due to strong growth, while still achieving conservation savings. Second, one ERU is equivalent to a single-family customer served with a 3/4-inch meter, which represents the largest component of the District's customer base.

From 1994 to 2005, the District did not track authorized but unbilled consumption. During the implementation of Washington State's WUE Rule, utilities were strongly encouraged to track all authorized use, both billed and unbilled, in order to more closely define actual distribution system leakage. The District utilizes the AWWA Water Audit software and the Water Balance method to identify and track water use that was previously considered "unaccounted for" water. Authorized billed consumption can include utility billing, hydrant meters and water used for construction under developer extensions. Authorized unbilled consumption includes water used for maintenance flushing, jetting, firefighting and fire training, and for capital improvement projects. In this section, all references to "annual consumption" will include all authorized water use, both billed and unbilled, from 2006-2017. The District only tracked billed consumption and did not track authorized but unbilled water use from 1994-2005. The District has shifted from estimating flushing water use to utilizing meters in the field to measure all water used for flushing and jetting.

Table 4-8 shows the annual consumption and the number of customers (as ERUs) for the years 1994-2017.

Table 4-8

Annual Consumption for the years 1994-2017
(Includes all authorized billed and unbilled consumption 2006-2017)

Year	Annual Consumption (in Millions of Gallons)	Number of Customers (as Equivalent Residential Units)	Average Consumption (in gallons per ERU per day)
1994	1,026	10,317	271
1995	1,126	11,973	256
1996	1,164	12,748	248
1997	1,193	13,375	242
1998	1,348	14,238	257
1999	1,354	15,306	240

Table 4-8 (cont.)
Annual Consumption for the years 1994-2017
(Includes all authorized billed and unbilled consumption 2006-2017)

Year	Annual Consumption (in Millions of Gallons)	Number of Customers (as Equivalent Residential Units)	Average Consumption (in gallons per ERU per day)
2000	1,463	16,280	244
2001	1,371	17,401	205
2002	1,533	18,134	224
2003	1,687	18,966	242
2004	1,776	20,071	227
2005	1,659	20,508	207
2006	1,919	20,816	234
2007	1,787	20,845	221
2008	1,800	21,010	209
2009	1,754	21,132	227
2010	1,503	21,221	194
2011	1,510	21,455	193
2012	1,593	21,906	199
2013	1,558	22,159	193
2014	1,623	22,459	198
2015	1,801	22,752	217
2016	1,715	22,938	205
2017	1,835	23,654	213

Figure 4-1 shows a comparison of the number of customers as ERUs to annual consumption in gallons per ERU per day for the 1994-2017 period. This chart shows that even with a steady increase in the number of ERUs during this period, consumption per ERU has gradually declined.

The Energy Policy Act, enacted in 1992, set goals, created mandates, and amended utility laws to increase clean energy use and improve overall energy efficiency in the United States. There has also been a corresponding decrease in water use due to the installation of more efficient fixtures and hardware, particularly after full implementation of changes to the Uniform Plumbing Code in 1994 that included water efficient hardware. Water efficient hardware such as toilets, washing machines, showerheads, and faucet aerators are relatively easy to install and have quantifiable water savings. There has been a market transformation in the Puget Sound area for some of these products, to the point where hardware is available that is even lower than code (for example, code for toilets is 1.6 gallons per flush, but many 1.2 gallons per flush toilets are now readily available in retail markets. The combination of conservation and public outreach programs as well as quantifiable savings from water efficient hardware have contributed to this reduction.

Figure 4-1

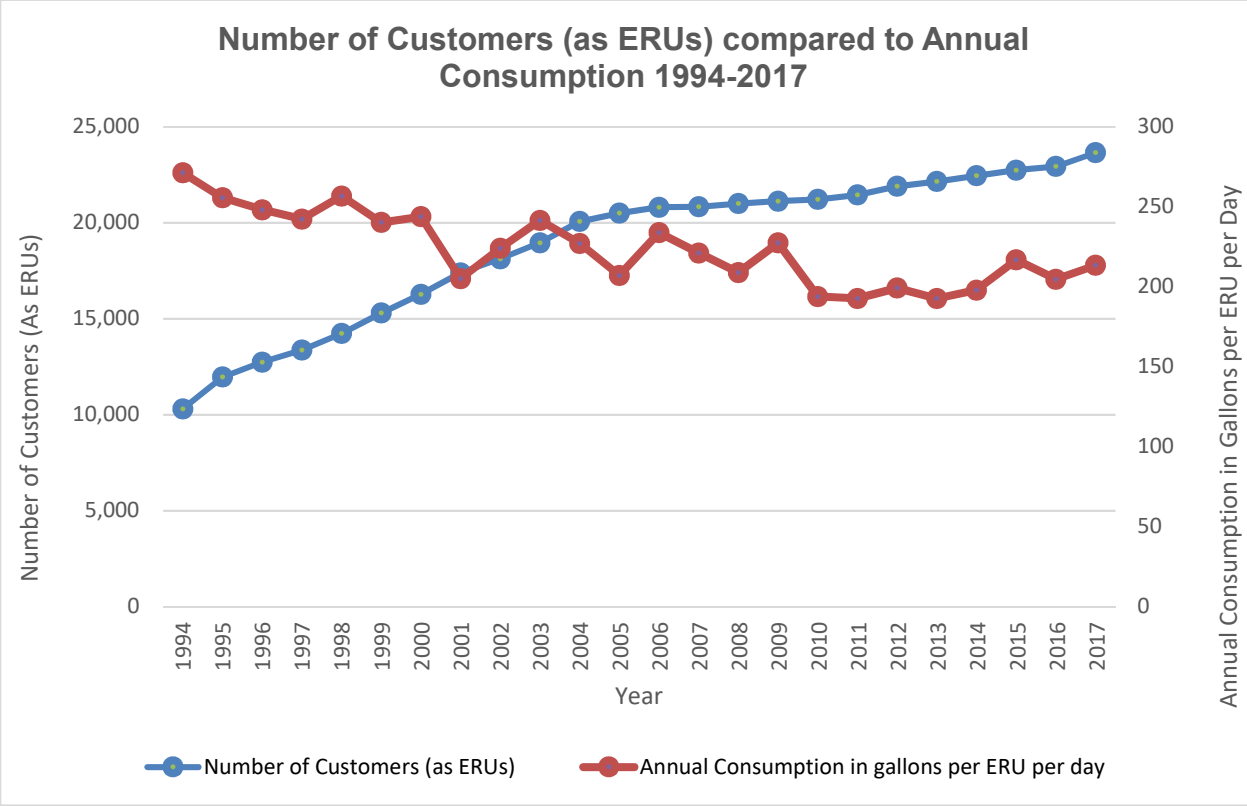

Peak Season Water Use

The District's peak season consumption per ERU for the years 1994 - 2017 is provided in Table 4-9. Most utilities see a rise in water use in the summer primarily due to outdoor lawn and garden watering, as well as other outdoor use such as pressure washing. Due to the demands that peak season water use imposes on water utilities, water managers often plan and manage their infrastructure needs primarily to accommodate peak summer water use. In this chapter, the District defines its peak season as June through September.

Table 4-9

Peak Summer Consumption for 1994-2017
(for the months of June, July, August and September)

Year	Consumption (in Millions of Gallons)	Number of Customers (as Equivalent Residential Units)	Peak Summer Consumption (in gallons per ERU per day)
1994	491	10,317	390
1995	523	11,973	358
1996	528	12,748	339
1997	524	13,375	321
1998	610	14,238	351
1999	586	15,306	314
2000	673	16,280	339
2001	552	17,401	260
2002	689	18,134	311
2003	857	18,966	370
2004	799	20,071	326
2005	658	20,508	263
2006	818	20,816	322
2007	796	20,845	313
2008	723	21,010	282
2009	869	21,132	337
2010	630	21,221	243
2011	609	21,455	233
2012	621	21,906	232
2013	733	22,159	271
2014	758	22,459	277
2015	939	22,752	338
2016	731	22,938	261
2017	791	23,654	274

Figure 4-2 shows a comparison of the peak consumption per ERU in gallons per day for the years 1994-2017.

Figure 4-2

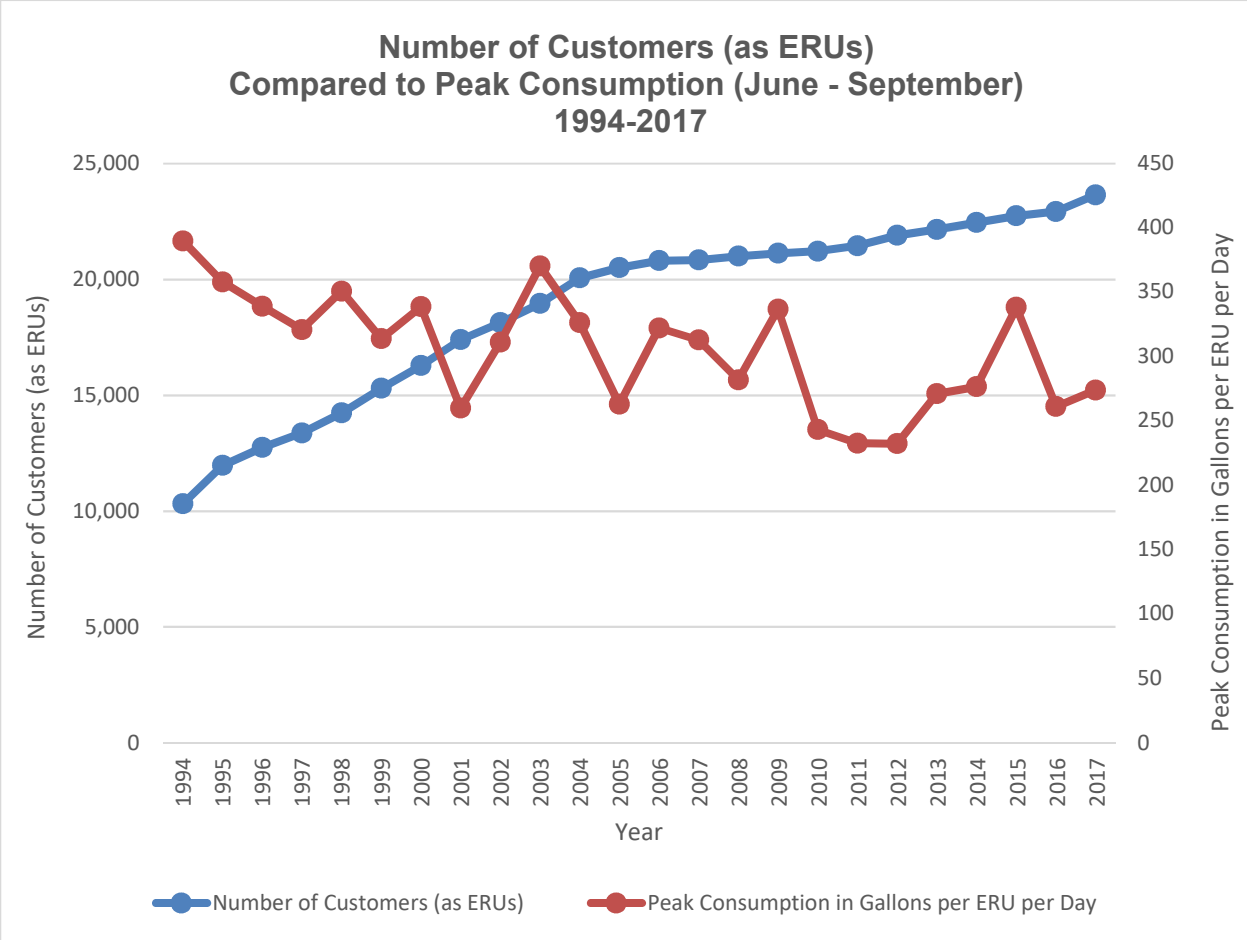

The District saw peak summer consumption ranging from a high of 390 gallons per ERU in 1994 to a low of 232 gallons per ERU per day in 2012. Peak consumption can vary from year to year according to climate conditions. Spikes in the chart may be attributed to climate and weather-related issues. For example, a hot dry summer may cause a spike in consumption in a given year, whereas a colder, rainy year may contribute to lower peak customer consumption. Curtailment due to drought emergencies can also contribute towards lower peak consumption.

4.1.4 Conservation Program for 2014-2019

4.1.4.1 Goal

In addition to its own in-house programs, Sammamish Plateau Water staff has actively worked with Cascade Water Alliance on water use efficiency programs since 2004. In 2013, Cascade assumed management of the vast majority of water use efficiency programs for its members. Cascade members fund the conservation program through conservation dues paid by each member. In 2017, the District paid conservation dues to Cascade totaling $109,100 for the implementation of a number of water use efficiency programs.

When the WUE Rule was implemented by the DOH, individual utilities were required to set goals and conduct performance reporting to the DOH and its customers. In 2013, Cascade saw an opportunity to set one regional water use efficiency goal on behalf of its seven members and worked with DOH Office of Drinking Water staff to develop the concept. On October 23, 2013, the Cascade Board of Directors officially adopted the first six-year regional goal and held a public forum on December 19, 2013. The Cascade meeting minutes and adopting resolution are included in Appendix N.

The official six-year goal is as follows:

"Cascade Water Alliance will dedicate resources necessary to achieve a cumulative drinking water savings of 0.6 million gallons per day on an annual basis, and 1.0 million gallons per day on a peak season (June-September) basis by 2020. Adopted by Cascade's Board of Directors, October 23, 2013 for the period 2014-2019."

The District's water use efficiency program for 2014-2019 consists of the measures listed in Table 4-10 and described below. The program reflects a continuation and/or enhancement of many of the measures in the District's historical program, as well as the inclusion of new measures. Similar to the District's previous conservation program, the program is a combination of local measures implemented by District staff and regional measures managed by Cascade.

The measures managed by Cascade are part of Cascade's 2014-2019 conservation plan, which is based on Cascade's 2005 Conservation Potential Assessment (CPA). The CPA analyzed savings and costs for various measures specific to Cascade members' service areas. Cascade will be the lead agency on program evaluation and tracking conservation savings. Cascade's next goal setting session will begin in 2019 for the 2020-2026 period.

It should be noted that the District will continue to support source meters, service meters, system leak detection and repair, although they are no longer considered official "conservation measures" under the WUE Rule.

Table 4-10 shows the District's Future Conservation Program.

Table 4-10
2014-2019 Future Conservation Program

Measure	Group	Sectors		
		Single Family Residential	Multi-Family Residential	Non-Residential
1. Source Meters	O	n/a		
2. Service Meters		X	X	X
3. System Leak Detection and Repair		n/a		
4. Flushing Management		n/a		
5. Technical Studies	B	n/a		
6. Technical Assistance		X	X	X
7. Conservation Pricing		X	X	X
8. Bills Showing Consumption History		X	X	X
9. School Education Programs		X	X	n/a
10. Public Outreach		X	X	X
11. Toilet leak detection and repair		X	X	X
12. Decreased shower use		X	X	
13. Decreased toilet flushing		X	X	
14. Eliminate partial clothes washers loads		X	X	
15. Decreased faucet use		X	X	
16. Cascade audits for automatic irrigation		X		X
17. SPW Irrigation Audit Program				X
18. Allow lawn to go dormant		X	X	X
19. Items Distributed		X	X	
20. Water Efficient Toilets	IH	X	X	X
21. Bathroom and kitchen faucet aerators		X	X	X
22. Showerheads		X	X	
23. Water Efficient Clothes Washers		X	X	X
24. Water Efficient Dishwashers		X	X	
25. Water Efficient Urinals			X	X
26. Pre-rinse spray heads				
27. Efficient Food Steamers				X
28. ET controllers	OH	X	X	X
29. Rain sensors			X	X

Group: O= Operational, B=Behavioral, IH = Indoor Hardware, OH = Outdoor Hardware

4.1.4.2 Conservation Measures

1. Source Meters

The District will continue the use, calibration, and maintenance of its source meters at all production wells, regional supply connections and active interties in 2018 and 2019, as it did in 2014-2017. Accurate water production and use data provides information used in developing conservation priorities, goals, and programs. Source meter readings are compiled annually and used in distribution system leakage calculations.

2. Service Meters

The District will continue use of service meters for all customers, a requirement of the WUE Rule, in 2018 and 2019, as it did in 2014-2017. Service meters are a key component of providing accurate water consumption information to customers, for use in conservation planning and applying rates on a commodity-use basis.

In 2016 and 2017, the District installed Automated Metering Infrastructure (AMI) "smart" meters on all service connections. These meters provide hourly water readings on a daily basis and include the ability to obtain individual meter reads on demand. The AMI system has the ability to provide alerts based on continuous water use over a specified duration for detecting potential leaks in the customer's water system. District customer service representatives are now using this data to notify customers about potential leaks in their water system.

The AMI system alerts District customer service staff of continuous water use over a period of 95 hours. District staff is currently notifying customers via mail, phone or a notice at the home to inform them of the alert, and if necessary, field services staff may meet with customers at their homes to assist with resolving the reason for the continuous water use. Use of AMI data has enhanced the District's ability to notify customers of potential leaks quickly, compared to when meter reads were only obtained bi-monthly.

The District has revised the leak adjustment policy to allow an adjustment if the customer's hourly consumption is greater than or equal to 50 cubic feet (374 gallons) per hour, and the customer repairs the leak within two weeks of the District's notification of the leak alert. The leak adjustment is calculated by estimating the leak consumption and applying a credit for the difference between the higher single-family block rates and the lowest single-family block rate. This results in the customer paying for the estimated leak amount at the District's lowest single-family block rate. As experience with the AMI system increases, the leak adjustment policy may be further modified.

The District is implementing a customer web portal in 2019 that will allow ratepayers to monitor their water consumption, compare current usage to previous periods, set individual conservation goals, and set individualized consumption alerts on their accounts.

Based on the data provided from the AMI system over the 15-month period from January, 2017 to March, 2018, the District identified that 14.6% of water accounts showed potential leaks, representing approximately 2722 customers. The assumption of a potential leak is based on continuous flow through a meter of at least 0.7 CF (5.24 gallons) over a 95-hour

period for single-family residential customers and 3.0 CF (22.4 gallons) over a 95-hour period for multi-family and non-residential customers.

3. Distribution System Leak Detection and Repair

The District Water Operations staff will continue to perform the supply-side leak detection and repair program in 2018 and 2019, as it did in 2014-2017. The District's 2014-2016 rolling three-year average distribution system leakage was 6.60% of production. This result is within the 10% or less requirement of the WUE Rule. It demonstrates that the District continues to manage distribution leaks within its system. In 2014, the District's leakage percentage was 8.04%, decreasing to 6.45% in 2015 and to 5.29% in 2016 due to changes in operational practices and improved tracking by field staff of nonrevenue water use. The District will continue to track distribution system leakage as a WUE rule requirement.

4. Flushing Management

The District will continue flushing management activities in 2018 and 2019, as it did in 2014-2017, as previously described in Section 4.1.3. Evaluation will include monitoring and tracking flushing water consumption to ensure that flushing as authorized but unbilled consumption is resulting in a decrease of the District's annual distribution system leakage.

5. Technical Studies

The District will continue funding and commissioning technical studies as needed in 2018 and 2019, as it did in 2014-2017, as previously described in Section 4.1.3. In addition, Cascade Water Alliance will continue technical studies on behalf of the District as necessary in 2018 and 2019. This measure will be implemented during all years of the Plan, as needed. Evaluation will consist of reviewing the number and type of studies that occur during the planning period.

6. Technical Assistance

The District anticipates it will continue providing technical assistance in 2018 and 2019, as it did in 2014-2017, as previously described in Section 4.1.3. In addition, Cascade will continue to provide technical assistance on behalf of the District to homebuilders, real estate organizations, landscape and nursery associations, and housing authorities. This measure will be implemented during all years of the Plan. Evaluation will consist of reviewing the information provided by Cascade, anticipated to include the number of customers assisted and type of technical assistance provided to non-residential customers during the planning period.

7. Conservation Pricing

The District plans to continue to use an increasing block rate structure to encourage demand side consumption reduction in 2018 and 2019, as it did in 2014-2017. Evaluation will include a review of annual and peak water consumption in each of the rate blocks.

8. Bills Showing Consumption History

The District plans to continue providing bills to all sectors showing consumption history as previously described in Section 4.1.3. Evaluation will include a review of annual and peak water consumption reduction.

9. School Education Programs

The District and Cascade Water Alliance will continue to provide school-based education programs in 2018 and 2019, as they did in 2014-2017, as previously described in Section 4.1.3. This measure will be implemented during all years of the Plan. Evaluation will consist of tracking the number of programs conducted and the number of students reached annually by Cascade's water education programs. In addition to reaching students grade K-12, Cascade will continue its work with the Teacher Fellows Program and Lake Washington Institute of Technology. The District and Cascade will track the number of programs presented and the total number of students reached annually and assumed savings, as these programs are difficult to quantify. The District works with local school groups and clubs to present programs and provides utility specific information.

10. Public Outreach

The District and Cascade will continue their various public outreach activities in 2018 and 2019, as in 2014-2017, and as previously described in Section 4.1.3. This measure will be implemented during all years of the plan. Cascade will also provide outreach programs on behalf of the District. Evaluation will consist of tracking the number of programs conducted and the number of program participants reached by public outreach programs annually and assumed savings, as these programs are difficult to quantify.

11. Toilet Leak Detection and Repair

The District, through Cascade, will continue to encourage SF and MF customers to find and repair leaks in their toilets through the use of toilet dye strips/tablets and will offer leak repair techniques to assist customers. This program will occur in 2018 and 2019, as it did in 2014-2017. Evaluation will consist of tracking the number of customers who receive toilet dye tablets or strips and using an industry savings calculation of the number of gallons per person per day saved for each customer receiving dye tablets/strips.

12. Decreased Shower Use

The District, through Cascade, will continue to encourage customers in the SF and MF sectors to shorten their showers with free electronic shower timers in 2018 and 2019, as it did in 2014-2017. The District will track the number of shower timers distributed annually and use an industry savings calculation to determine the number of gallons per person per day saved.

13. Decreased Toilet Flushing

The District, through Cascade, will continue to ask customers to flush their toilets only when necessary and not to use the toilet as a wastebasket in 2018 and 2019, as it did in 2014-2017. This applies to the SF and MF sectors. Evaluation will consist of using an industry savings calculation to determine the number of gallons per person per day saved.

14. Eliminate Partial Clothes Washer Loads

The District, through Cascade, will continue to ask customers in the SF and MF sectors to wash only full loads of laundry in 2018 and 2019, as it did in 2014-2017. Evaluation will consist of using an industry calculation to determine the number of gallons per person per day saved.

15. Decreased Faucet Use

The District, through Cascade, will continue to ask customers in the SF and MF sectors to turn off faucets when brushing teeth, shaving or washing vegetables in 2018 and 2019, as it did in 2014-2017. Evaluation will consist of using an industry savings calculation to determine the number of gallons per person per day saved in each sector.

16. Cascade Audits for Automatic Irrigation

Through Cascade, the District will continue to offer irrigation system audits and evaluations for the MF and ICI sector in 2018 and 2019, as it did in 2014-2017. Cascade will also provide outdoor kits for SF customers during that same period. Cascade may also conduct limited SF audits on a select basis in 2018-2019. Evaluation will consist of using an industry savings calculation to determine the number of gallons per year saved for the entire sector.

17. SPW Irrigation Audit Program

The District will continue to offer its in-house Irrigation with Audit Rate Program in 2018 and 2019, as it did in 2014-2017, for customers with dedicated irrigation systems, providing a discounted rate to customers who meet audit program parameters and stay within an annual water allowance. Evaluation will consist of monitoring customer annual consumption and tracking the number of customers audited times the per unit savings using industry standards to determine the estimated savings achieved by audit program participants.

18. Allow Lawn to Go Dormant

The District, through Cascade, will continue to ask customers to allow their lawns to go dormant during the summer months in 2018 and 2019, as it did in 2014-2017. Customers who let their lawns turn golden will be advised to water their lawns at least once a month to minimize plant stress and death. Evaluation will consist of using an industry calculation to determine the number of estimated gallons per year saved for the entire sector.

19. Items Distributed

The District, through Cascade, will continue to provide items such as showerheads, kitchen and faucet aerators, and rain gauges free of charge to SF, MF and ICI customers through the District office and at public outreach events in 2018 and 2019, as it did in 2014-2017. Evaluation will include estimating savings using an industry calculation.

20. Water Efficient Toilets

In conjunction with Cascade, the District will continue to offer direct toilet replacement or partial rebates to MF and ICI customers in 2018 and 2019, as it did in 2014-2017. Cascade may also provide limited direct replacements to MF, SF and ICI customers on a select basis in 2018-2019. Evaluation will consist of using an industry calculation to determine the number of gallons per person per day saved for each individual sector.

21. Bathroom and Kitchen Faucet Aerators

The District, through Cascade, will continue to offer efficient bathroom and faucet aerators, to customers in the SF, MF and ICI sectors, and commercial laminar flow restrictors for ICI customers, in 2018 and 2019, as it did in 2014-2017. Evaluation will consist of using an industry calculation to determine the number of gallons per person per

day saved for each individual sector (SF, MF and ICI.)

22. Showerheads

The District and Cascade will continue to provide showerheads to customers at the District office and during public outreach events in the SF, MF and ICI sectors in 2018 and 2019, as it did in 2014-2017. Evaluation will consist of using an industry calculation to determine the number of gallons per person per day saved for each individual sector.

23. Water Efficient Clothes Washers

In conjunction with Cascade programs, the District will continue to provide direct installation and partial rebates for efficient clothes washers in the MF and ICI sectors in 2018 and 2019, as it did in 2014-2017. A limited number of direct installs in SF in residence dwellings may be available in 2018 – 2019 on a select basis. Evaluation will consist of using an industry calculation to determine the number of gallons per person per day saved for each individual sector.

24. Water Efficient Dishwashers

Through Cascade, the District will continue to provide partial rebates to customers in the MF and ICI sectors in 2018 and 2019, as it did in 2014-2017. A limited number of rebates may be available for SF customers in 2018 and 2019 on a select basis. Evaluation will consist of using an industry calculation to determine the number of gallons per person saved for each individual sector.

25. Water Efficient Urinals

Through Cascade, the District will continue to provide partial rebates to customers in the ICI sector in 2018 and 2019, as it did in 2014-2017. Evaluation will consist of using an industry calculation to determine the number of gallons per business per day saved for this sector.

26. Pre-rinse Spray Valves

Through Cascade, the District will continue to provide pre-rinse spray valve installations in the ICI sector in 2018 and 2019, as it did in 2014-2017. Evaluation will consist of using an industry calculation to determine the number of gallons per business per day saved for this sector.

27. Efficient Food Steamers

Through Cascade, the District will continue to provide efficient food steamers to the ICI sector in 2018 and 2019, as it did in 2014-2017. Evaluation will consist of using an industry calculation to determine the number of gallons per business per day saved for this sector.

28. ET Controllers

Through Cascade, the District will continue to offer rebates to the MF and ICI sectors for the installation of ET controllers in 2018 and 2019, as it did in 2014-2017. In addition, rebates will also be provided for customers who install weather-based irrigation controllers that have a rain bucket or sensor that can determine rainfall amounts at the individual site and apply water accordingly. Evaluation will consist of tracking the number of rebates given multiplied by each unit's savings (using numbers from the Cascade Conservation Potential Assessment) for each efficient controller to determine the total

savings achieved for this program. ET controller rebates may be available on a limited basis for select SF customers in 2018-2019.

29. Rain Sensor Rebates

As part of the regional Cascade program, the District will continue providing MF and ICI rain sensor rebates in 2018 and 2019, as it did in 2014-2017. The program will continue for multifamily, commercial and public institutional customers with dedicated irrigation systems. Rain sensor rebates for 2018-2019 may be available on a limited basis for select SF customers. Evaluation will consist of tracking the number of rebates given times the per unit savings (using numbers from the Cascade Conservation Potential Assessment) for each rain sensor to determine the total savings achieved for this program.

4.1.4.3 Estimated Savings and Budget

Table 4-11 shows the savings and cost summary for the conservation programs conducted by Sammamish Plateau Water in conjunction with Cascade Water Alliance. In 2013, Cascade set a regional water conservation goal on behalf of its seven members (Sammamish Plateau Water, the cities of Bellevue, Redmond, Issaquah, Kirkland, and Tukwila, and Skyway Water and Sewer District) for the years 2014-2019. The Cascade goal is to achieve a savings of 0.6 million gallons per day (mgd) on an average annual basis and 1.0 mgd on a peak season basis (June-September) by 2020.

Cascade has provided estimated savings from the program elements for the combined 7 members. Figures were provided for programs over the life of each program, as well as that for the period from 2014 to 2016. The figures for 2014-2016 program implementation are used as the basis to estimate District savings from 2017 through 2027.

To estimate the District share of the Cascade program savings, the total savings for all Cascade members is multiplied by the District's share of the total Cascade CERUs. (Cascade Equivalent Residential Units). The District's share of CERUs is calculated as shown:

$$\frac{2016\ Sammamish\ Plateau\ Water: 22{,}916\ CERUs}{2016\ Total\ Cascade\ Members: 167{,}922\ CERUs} = 13.65\%$$

After the District's share of the Annual Average savings and Peak Season savings from the Cascade program are calculated, the estimated savings from the District's Irrigation Audit program are added to obtain the total estimated conservation savings for the District.

Cost estimates for the Cascade program are provided only for the life of each measure during the 2012 – 2060 Cascade Planning Period. The life of the measures varies, so it was not possible to determine the cost of the program implantation over the District's 10-year planning period. However, each measures' cost per CCF saved and cost per peak gallon as provided by Cascade are reported and can be used for comparisons.

Savings from this program are shown in the Table 4-11, Savings and Cost Summary.

Table 4-11
Savings and Cost Summary[1]

Measure Number	Conservation Measure	Seasonality	Annual Average (GPD)	Annual Average (CCF)	Peak Season (GPD)	Measure Life Savings (CCF)	Total Cost Over 49-Year (2012-2060) Planning Period Measure Life Years Vary	Cost per CCF Saved Over Measure Life	Cost per Peak Gallon	2014-2016 Annual Water Savings (GPD)	2014-2016 Peak Water Savings (GPD)
1	Source Meters	Year Round	-	-	-	-	$-	$-	$-	-	-
2	Service Meters	Year Round	-	-	-	-	$-	$-	$-	-	-
3	Distribution System Leak Detection & Repair	Year Round	-	-	-	-	$-	$-	$-	-	-
4	Flushing Management	Year Round	-	-	-	-	$-	$-	$-	-	-
5	Technical Studies	Year Round	-	-	-	-	$-	$-	$-	-	-
6	Technical Assistance	Year Round	-	-	-	-	$-	$-	$-	-	-
7	Conservation Pricing	Year Round	-	-	-	-	$-	$-	$-	-	-
8	Bills Showing Consumption History	Year Round	-	-	-	-	$-	$-	$-	-	-
9	School Education Programs	Year Round	-	-	-	-	$-	$-	$-	-	-
10	Public Outreach	Year Round	-	-	-	-	$-	$-	$-	-	-
11	Toilets - Leak Detection	Year Round	142,886	69,724	142,886	3,106,295	$917,029	$0.55	$11.85	106,428	106,428
12	Showers - Decreased Use	Year Round	36,266	17,697	36,266	756,536	$1,937,025	$5.37	$111.96	-	-
13	Toilets - Decreased Flushes	Year Round	44,016	21,478	44,016	918,206	$1,937,025	$4.58	$95.52	-	-
14	Clothes washers - Decrease Partial Loads	Year Round	56,179	27,413	56,179	1,171,921	$2,667,375	$6.37	$132.88	-	-

Table 4-11 (cont.)
Savings and Cost Summary[1]

Measure Number	Conservation Measure	Seasonality	Annual Average (GPD)	Annual Average (CCF)	Peak Season (GPD)	Measure Life Savings (CCF)	Total Cost Over 49-Year (2012-2060) Planning Period Measure Life Years Vary	Cost per CCF Saved Over Measure Life	Cost per Peak Gallon	2014-2016 Annual Water Savings (GPD)	2014-2016 Peak Water Savings (GPD)
15	Faucets - Decrease Use	Year Round	53,033	25,878	53,033	1,106,293	$1,937,025	$3.81	$79.42	-	-
16	Outdoor Audit or Irrigation Improvements	Peak Only	35,099	17,127	60,848	759,189	$10,128,539	$126.28	$1,513.94	3,000	6,000
17	SPW Irrigation Audit Program - See Below	Peak Only	-	-	-	-	$-	$-	$-	-	-
18	Allow the Lawn Go Dormant	Peak Only	376,803	183,868	656,541	7,860,342	$1,293,975	$0.27	$3.09	-	-
19	Items Distributed to Cascade Members	Year Round	-	-	-	-	$-	-	$-	3,872	3,872
20	Toilets - Low Flow Toilets	Year Round	736,500	359,388	736,500	11,572,888	$12,681,330	$15.86	$86.38	5,832	5,832
21	Faucets - Efficient Bathroom Aerators	Year Round	448,929	219,063	448,929	10,613,440	$1,896,010	$1.12	$26.52	81,644	81,644
22	Showerhead - Efficient	Year Round	618,070	301,598	618,070	14,613,166	$4,506,870	$1.69	$39.96	232,371	232,371
23	Clothes washers - Efficient	Year Round	336,350	164,128	336,350	6,975,449	$1,561,150	$0.88	$18.23	35,070	35,070
24	Dishwasher - Efficient	Year Round	56,579	27,609	56,579	1,311,412	$862,040	$2.23	$51.78	-	-
25	Urinals - Efficient	Year Round	43,819	21,382	43,819	952,853	$1,381,755	$88.93	$109.70	-	-
26	Spray Valves - 0.6 gpm Pre-Rinse Spray Valve	Year Round	3,692	1,802	3,692	79,585	$165,075	$2.07	$44.71	7,398	7,398
27	Food Steamers - Efficient	Year Round	35,568	17,356	35,568	811,221	$233,946	$0.29	$6.58	-	-

Table 4-11 (cont.)
Savings and Cost Summary[1]

Measure Number	Conservation Measure	Seasonality	Annual Average (GPD)	Annual Average (CCF)	Peak Season (GPD)	Measure Life Savings (CCF)	Total Cost Over 49-Year (2012-2060) Planning Period Measure Life Years Vary	Cost per CCF Saved Over Measure Life	Cost per Peak Gallon	2014-2016 Annual Water Savings (GPD)	2014-2016 Peak Water Savings (GPD)
28	Irrigation Controllers - ET Model	Peak Only	127,387	62,161	221,220	2,952,634	$1,137,190	$1.15	$14.83	-	-
29	Rain Sensors	Peak Only	21,515	10,499	37,364	498,688	$555,090	$3.15	$40.76	-	-
	Totals - CASCADE PROGRAM - ALL MEMBERS		**3,172,690**	**1,548,171**	**3,587,860**	**66,060,118**	**$45,798,449**	**$264.61**	**$2,388.13**	**475,615**	**478,615**
	Totals - CASCADE PROGRAM - SPWSD Only based on Percent of SPW CERUs		**432,971**	**211,276**	**489,629**	**9,015,100**				**64,906**	**65,316**
17	Local SPW Irrigation Audit Program	Peak Only	10,273	5,013	20,546	245,632				10,273	20,546
	Total SPWSD Cascade + Local Program		**443,244**	**216,289**	**510,175**	**9,260,732**				**75,179**	**85,862**

[1] Data for all measures, except 17, provided by Cascade Water Alliance.

The estimated savings can be allocated by sector, by indoor versus outdoor measures, and by hardware versus behavioral measures. Those allocations are shown in Figures 4-3 through 4-8. The majority of the savings are expected from the single-family sector, as shown in Figures 4-3 and 4-4. The savings are expected more from indoor measures on both an annual and peak season basis, but the share from outdoor measures is expected to increase significantly during the peak season, as shown in Figures 4-5 and 4-6. The savings are approximately equal from behavior and hardware measures on an annual basis and are derived more from behavioral measures on a peak season basis, as shown in Figures 4-7 and 4-8.

Figure 4-3

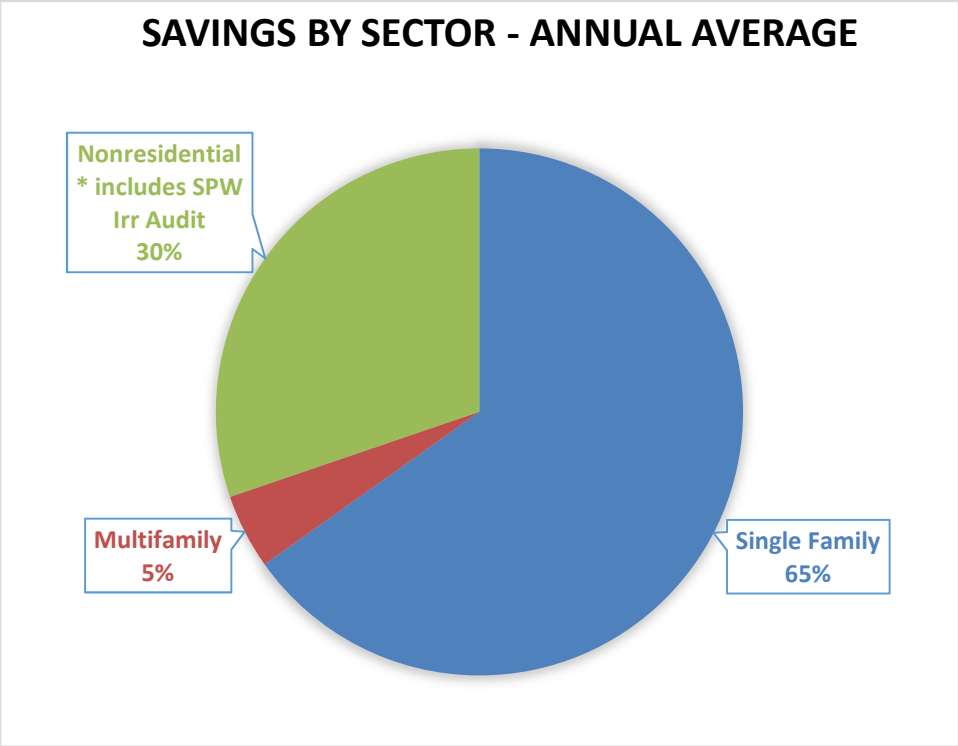

Figure 4-4

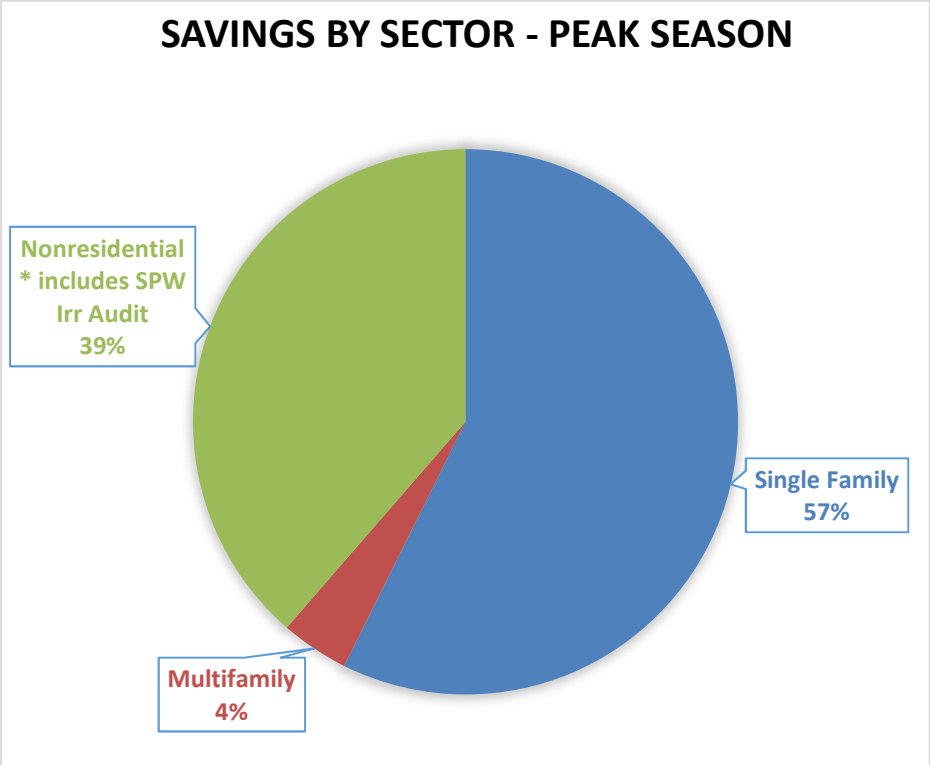

Figure 4-5

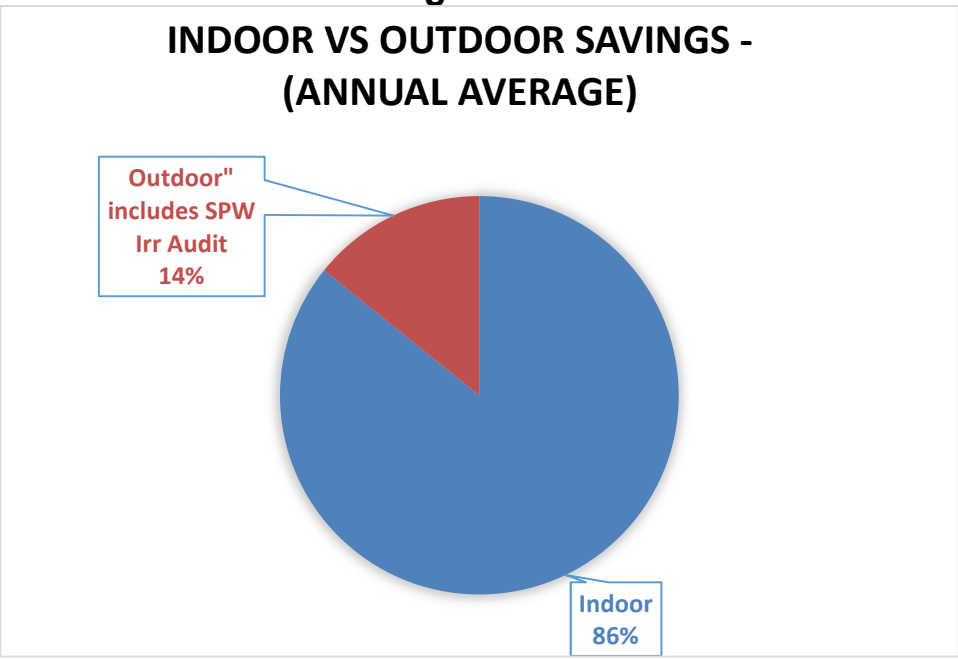

Figure 4-6

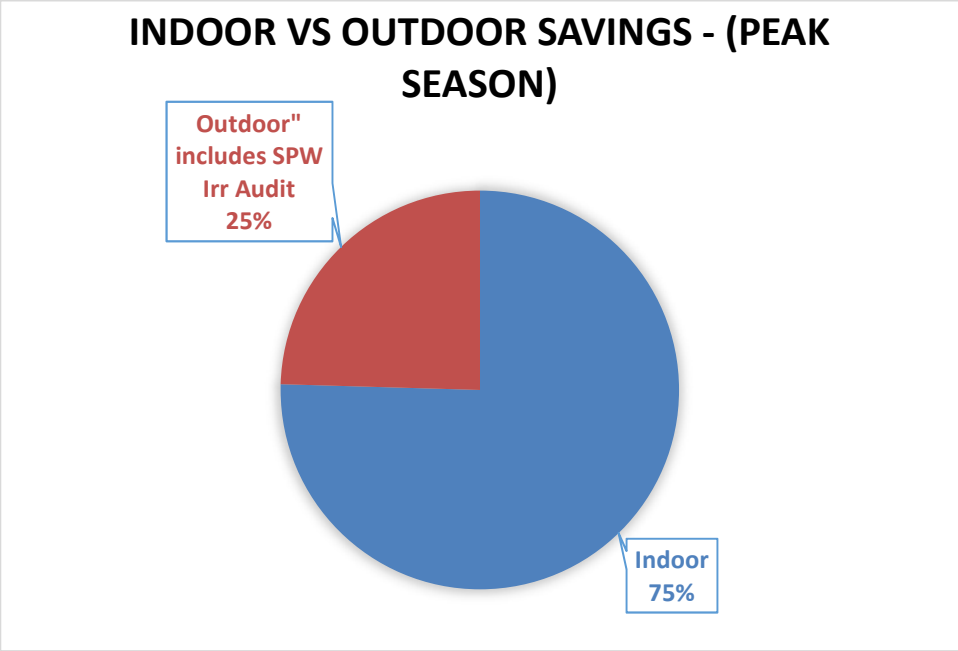

Figure 4-7

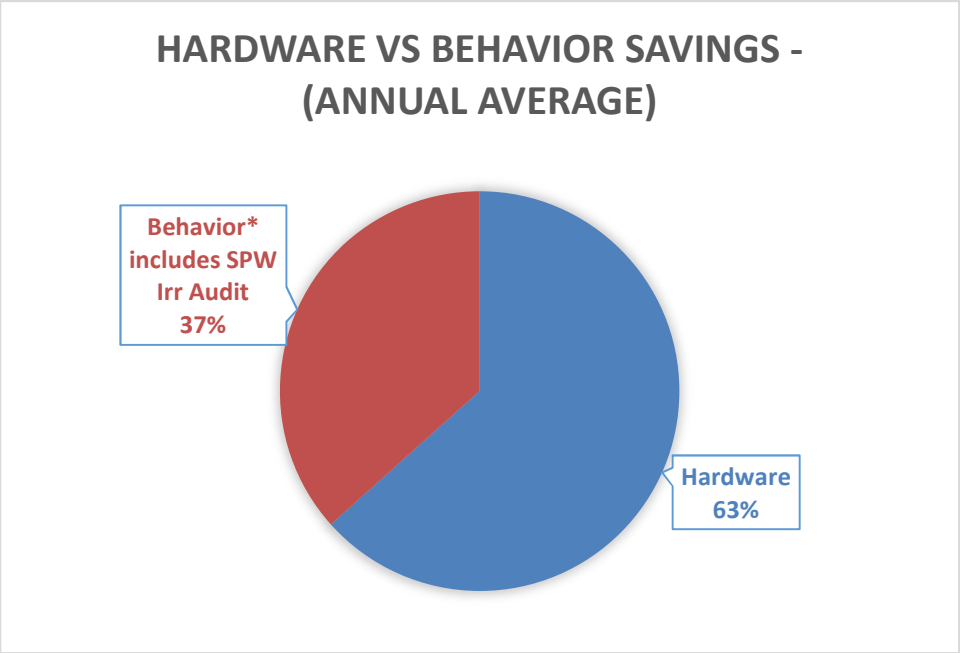

Figure 4-8

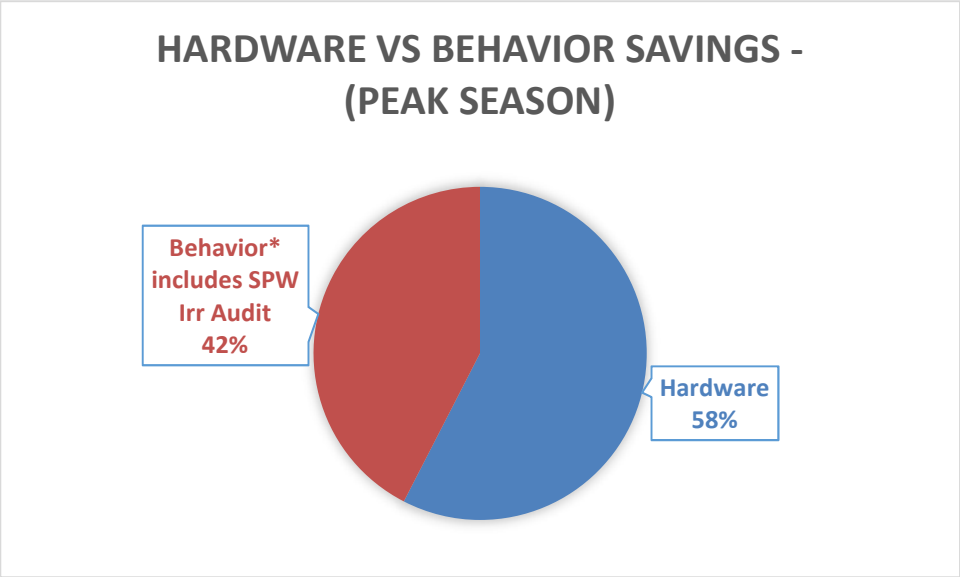

4.1.4.4 Impact on Demand

Cascade Water Alliance conducts the majority of the District's water conservation programs, with the exception of the District's in-house Irrigation Audit Program. The Cascade Conservation Program data provided included conservation savings based on the total amount of estimated savings generated by *all* of its members collectively. It did not track the program use savings of each utility individually, as it had done in the past.

District staff consulted with DOH staff on the best way to estimate savings for the District. DOH staff recommended basing the District savings estimates on either the percentage of Sammamish Plateau Water's population served as compared to the population served by other Cascade members, or by the amount of Cascade water used by Sammamish Plateau Water as compared to other Cascade member utilities. District staff contacted Cascade Water Alliance staff, and they recommended using Cascade Equivalent Residential Units (CERUs) as the most accurate way of determining the amount of water purchased by the District and subsequently the estimated conservation savings. Cascade provided data that showed that the total Cascade ERUs for all of its members in 2016 was 167,922. The total number of ERUs for Sammamish Plateau Water in 2016 was 22,916, or approximately 13.65% of the total Cascade ERUs.

The Cascade data for conservation measures, previously provided in Table 4-11, was summarized based on whether it was a hardware or behavior-based measure. The annual and peak season savings estimated for the 2014-2016 period were assumed to continue throughout the next 10-years.

The District determined that its estimated hardware savings from the Cascade and District programs is 60,246 gallons per day. The District's share of behavioral savings is 14,933 gallons per day.

It is assumed that implementation of both the Cascade and District conservation programs will continue, with savings accumulating over time. The cumulative annual and peak season savings, as well as their relationship to the demand forecast, are provided in Table 4-12 and 4-13.

Table 4-12
Savings Schedule and Impact on Average Demand

Year	Projected Demand Without Conservation, Average Daily Demand (gpd)[1]	Cumulative Annual Savings (gpd)[2]			Projected Demand With Conservation, Average Daily Demand (gpd)	Demand Reduction[3]
		Hardware	Behavior	Total		
2017	5,167,797	49,444	25,735	75,179	5,092,618	1.45%
2018	5,290,633	98,889	51,470	150,359	5,140,275	2.84%
2019	5,369,786	148,333	77,205	225,538	5,144,248	4.20%
2020	5,430,987			228,108	5,202,878	4.20%
2021	5,510,909			231,465	5,279,444	4.20%
2022	5,629,678			236,454	5,393,225	4.20%
2023	5,711,574			239,893	5,471,681	4.20%
2024	5,797,068			243,484	5,553,584	4.20%
2025	5,881,411			247,027	5,634,385	4.20%
2026	5,933,845			249,229	5,684,616	4.20%
2027	5,986,254			251,430	5,734,824	4.20%

[1]Projected Demand without Conservation ADD (gpd) = ADD per calculations supporting Table 2-16.

[2]Conservation savings are based on the annual average over the Cascade Program of 2014-2016 + District Irrigation Audit Savings.

[3] Conservation savings are extended beyond the 2014-2019 conservation program planning period at 4.20% (the same as that in 2019). Detailed savings by hardware versus behavior are not calculated for these future years.

Table 4-13
Savings Schedule and Impact on Peak Season Demand

Year	Projected Demand Without Conservation (Peak season gpd)[1]	Cumulative Peak Season Savings (gpd)[2]			Projected Demand With Conservation (Peak Season gpd)	Demand Reduction[3]
		Hardware	Behavior	Total		
2017	7,286,594	49,444	36,417	85,862	7,200,732	1.18%
2018	7,459,793	98,889	72,834	171,723	7,288,069	2.30%
2019	7,571,398	148,333	109,252	257,585	7,313,813	3.40%
2020	7,657,691			260,521	7,397,170	3.40%
2021	7,770,382			264,355	7,506,028	3.40%
2022	7,937,846			270,052	7,667,795	3.40%
2023	8,053,320			273,980	7,779,339	3.40%
2024	8,173,866			278,082	7,895,784	3.40%
2025	8,292,790			282,127	8,010,663	3.40%
2026	8,366,721			284,643	8,082,079	3.40%
2027	8,440,618			287,157	8,153,461	3.40%

[1]Peak Season Demand is ADD x Peak Season Factor. The Peak Season Factor is the 3-year average (2014-2016) peak season (June-September) average daily demand divided by annual ADD = 1.41.

[2]Conservation savings are based on the annual average over the Cascade Program of 2014-2016 + District Irrigation Audit Savings.

[3]Conservation savings are extended beyond the 2014-2019 conservation program planning period at 3.40% (the same as that in 2019). Detailed savings by hardware versus behavior are not calculated for these future years.

The District's demand will be reduced by the expected savings from the conservation program. For the conservation-adjusted forecast, the estimated savings have been subtracted from the demand forecast.

The District's estimated annual demand reduction percentage for future years is an estimated 1.45% in 2017, 2.84% in 2018, and 4.20% in 2019. The District's estimated peak season demand reduction percentage for future years is an estimated 1.18% in 2017, 2.30% in 2018, and 3.40% in 2019. Conservation savings are extended beyond the 2014-2019 conservation program planning period at 4.20% annually and 3.40% for the peak season (the same as in 2019). Detailed savings by hardware versus behavior are not calculated for these future years. This is because Cascade Water Alliance's Conservation Program is scheduled to terminate in 2019, at the end of its six-year planning period per the requirements of the WUE Rule. In 2019, Cascade will develop a new six-year conservation planning program for the years 2020-2026 according to the WUE Rule.

4.2 Source of Supply Strategy

The District has developed a water supply strategy comprised of multiple elements that provide reliability and assurance that District demands will be met well into the future. Each element is addressed in detail in different sections of the Water Comprehensive Plan. Brief descriptions are provided below, with references provided for other sections and appendices that contain more information for each item.

- ***Groundwater Supplies***
  The District has historically been served by quality groundwater supplies. It is the District's goal to continue using its existing groundwater wells as its primary source of supply into the future, while utilizing as much of the supply from Cascade as necessary to maintain water quality in the South Regional Connection supply line and optimize the return on financial commitment for water from Cascade.

  As presented in Section 3.1.2, the capacities of the District's wells in the Plateau Zone are not sufficient to accommodate forecast demands through the ten-year planning horizon. As described in Chapter 3, supply from Cascade via the South Regional Connection is available to supplement District groundwater sources to meet present and forecast long-term needs of the District.

  In the Cascade View Zone, existing well capacities are sufficient to meet demands throughout the 20-year planning horizon. However, the availability of Cascade supply via the North Regional Connection provides for reliability in the supply of this service zone.

  Details regarding the operation of the District's wells are provided in Section 6.3.1, including the seasonal variations in well and regional source use.

- ***Water Level Monitoring Program***
  The District has implemented a long-term ground and surface water level monitoring program, with records available since 1990. The program currently consists of monitoring ground water levels at 56[1] wells in the Lower Issaquah Valley, Sammamish Plateau, and Cascade View and surface water levels at one surface water station located on North Fork Issaquah Creek in the Lower Issaquah Valley.

  Data from this program allows the District to:
  - Determine the quantity of water available
  - Analyze impacts of climate, water and land use changes on the aquifer system
  - Provide water level data for the calibration of the District's numerical groundwater models (Plateau and Valley)

[1] This count includes the District's production wells and nested wells within a monitoring station. For example, VT-8 contains four nested 2-inch monitoring wells that are completed at different depths within the aquifer system (VT-8.1, 8.2, 8.3 and 8.4).

- Evaluate groundwater gradients and flow patterns
- Provide empirical data for water rights and resource management decisions

In recent years, the District has used the long-term water level monitoring data for evaluating the District's ASR Program, assessing groundwater influence from nearby stormwater infiltration facilities (see Section 5.4.3.1 for more information) and to develop a contaminant fate and transport model in the Valley Aquifer to evaluate the migration of an identified contaminant (PFC plume, see Section 5.4.3.2 for more information).

- ***Aquifer Storage and Recovery***
  The District completed its 10th year of operational testing of its aquifer storage and recovery (ASR) programs in 2015 under 10-year ASR permits (R1-28191P and R1-28192P). The objectives of these programs included obtaining additional source through recovery of winter surplus water introduced into the aquifer and improving the sustainability of groundwater aquifers and their water quality. At the end of 2015, the District provided a summary of the operational test results and applied for permit extensions for an additional 10 years and met with the Department of Ecology (DOE), who regulates ASR. In December 2017 the District received a permit extension for the ASR program in the Plateau Aquifer System (PAS), but the extension removed the ability for the District to continue ASR operational testing in aquifer Zone II, which is tapped by District production wells 1R, 2.1, 2.2, 10 and Well 15, which has pending water right applications. The extension for the ASR program in the PAS is limited to operational testing within the deeper aquifer zones III and IV tapped by District wells 4, 5, 11.1, 11.2 and a deep test well located adjacent to the District's Section 36 storage tanks. The District continues to wait on a decision for approval of the Cascade View ASR program permit extension. This permit extension request includes obtaining a percentage of recoverable quantity above existing water rights for the Cascade View ASR program. The District's ASR program is described in more detail in Section 4.4.

- ***Regional Supplies***
  As a member of Cascade, the District obtains water through two regional connections, as noted above and described in more detail in Section 6.3.1. These regional supplies are used to supplement District sources and to support the District's ASR programs. A minimum of one-half of one million gallons per day is purchased from Cascade to maintain the water quality in the South Regional Connection pipeline, and an average of one million gallons per day is used to optimize the return on financial commitment for water from Cascade.

- ***Conservation***
  Section 4.1 presents the District's water conservation program, including goals established consistent with the WUE Rule and in concert with Cascade's regional conservation program. Conservation plays an important role in the District's supply strategy through the reduction in future water demand growth.

- ***Reclaimed Water***
  The District has evaluated opportunities for the use of reclaimed water to replace a portion of its non-potable water demand. An early feasibility study was prepared in 1995. Cascade Water Alliance further evaluated the potential for reclaimed water use in 2004. More recently, reclaimed water was considered as a supply option within Cascade's 2012 Transmission and Supply Plan (TSP). Chapter 5 and Appendix D of the 2012 TSP are provided in Appendix N, summarizing the identification of five potential reclaimed water use sites within the District's service area, representing school and park irrigation uses. The TSP also discusses the potential for King County's Brightwater Regional Treatment System to serve as the source of reclaimed water supply for areas such as the Sammamish Valley and customers served by the District.

  Though the District has no specific plans at this time to deliver reclaimed water to its customers, the option will continue to be considered as a future water supply alternative.

While the primary components of the District's supply strategy currently rely on the use of District groundwater supplies in conjunction with Cascade's regional supplies, this strategy will be modified as necessary to continue supporting District needs into the future and to be consistent with the supply strategy set forth by Cascade in its TSP.

4.3 Water Rights Evaluation

The District has numerous water rights associated with its groundwater wells. Tables 4-14 and 4-15 list these rights, while also comparing the annual and instantaneous quantities with current and projected demands, respectively. Because the District utilizes these groundwater rights as well as regional Cascade supplies, the tables include a summary of how these sources combine to sufficiently meet current and future supply needs.

The determination of the water source was developed using a set of "rules" on how the groundwater wells would be utilized throughout the year. The rules reflect the current normal operating sequences but should not be considered the only operational scheme possible for the District's sources. When the groundwater sources are not sufficient to meet demand, water from Cascade will be utilized. Even when groundwater sources are sufficient a minimum amount of water supply is taken from Cascade to keep the water in the supply lines fresh and with the consideration of commitments to pay for a certain minimum quantity of water from Cascade, whether or not it is used. Since the Plateau Zone and Cascade View Zone are hydraulically separated, each zone was considered separately. The demands were developed considering each month's demand separately through the year. In addition, the supply strategy attempted to keep the demand for Cascade water constant through a week by utilizing storage capabilities.

The general rules associated with each well are as follows:

Plateau Zone:

- Well 9: All year as substitute for Wells 7 and 8, use under Temporary Water Right Change
  - Well 8: Summer use only
  - Well 7: Summer and Winter use
- Wells 2 + 2.2: All year constant rate
- Well 4R + 11.2: Alternate between the wells, running all year.
- Well 10: Summer use primary
- Well 1R: Summer use primary
- Well 11.1: Only operated as needed

Cascade View Zone:

- Well 12R: Summer use primary, winter second
- Well 13R: Winter use primary, summer second

The District may consider acquisition of existing groundwater rights from others located in or near the District's service area in the 20-year planning horizon. There are also pending applications for Well 15 including both supplemental and new groundwater rights.

Applications for change of existing water rights that have recently been approved by Ecology include:

- Transfer of remaining water rights from Well 14 to Well 13R. (A portion of Well 14 water rights were previously transferred to Ames Lake Water District.)
- Additional point of withdrawal at Well 4R for water rights assigned to District Well 11.1.
- Additional point of withdrawal at Well 4R and Well 1.2 for water rights assigned to District Well 11.1.
- A temporary change in withdrawal at Well 9 utilizing water rights assigned to Wells 7 and 8

Additional applications and subsequent approvals are possible. These have, and will continue, to primarily focus on use of existing water rights assigned to wells that have an increased risk of entraining a known contaminant plume (Well 7 and 8), or capacity limitations (due to operational, mechanical, and/or natural causes)[2] and withdrawing this unused portion from additional points of withdrawal located within the same aquifer system.

[2] Limited pumping due to six-months of ASR injection into the pumping well is an operational factor. Well screen plugging resulting in efficiency loss is a mechanical factor, and extended drought resulting in lower groundwater levels and pump submergence is a natural factor.

This page intentionally left blank.

Table 4.14 - Water Right Self-Assessment – Plateau Zone

Mouse-over any link for more information. Click on any link for more detailed instructions.

Water Right Permit, Certificate, or Claim # *If water right is interruptible, identify limitation in yellow section below	WFI Source # If a source has multiple water rights, list each water right on separate line plus Well No.	Existing Water Rights Qi= Instantaneous Flow Rate Allowed (GPM or CFS) Qa= Annual Volume Allowed (Acre-Feet/Year) This includes wholesale water sold				Current Source Production – Most Recent Calendar Year Qi = Max Instantaneous Flow Rate Withdrawn (GPM or CFS) Qa = Annual Volume Withdrawn (Acre-Feet/Year) This includes wholesale water sold				10-Year Forecasted Source Production (determined from WSP) This includes wholesale water sold				20-Year Forecasted Source Production (determined from WSP) This includes wholesale water sold			
		Primary Qi Maximum Rate Allowed	Non-Additive Qi Maximum Rate Allowed	Primary Qa Maximum Volume Allowed	Non-Additive Qa Maximum Volume Allowed	Total Qi Maximum Instantaneous Flow Rate Withdrawn	Current Excess or (Deficiency) Qi	Total Qa Maximum Annual Volume Withdrawn	Current Excess or (Deficiency) Qa	Total Qi Maximum Instantaneous Flow Rate in 10 Years	10-Year Forecasted Excess or (Deficiency) Qi	Total Qa Maximum Annual Volume in 10 Years	10-Year Forecasted Excess or (Deficiency) Qa	Total Qi Maximum Instantaneous Flow Rate in 20 Years	20-Year Forecasted Excess or (Deficiency) Qi	Total Qa Maximum Annual Volume in 20 Years	20-Year Forecasted Excess or (Deficiency) Qa
G1-*00342C	S01 Well 1R	300 GPM		448 AF/YR		300 GPM	0 GPM	304.9 AF/YR	143.1 AF/YR	300 GPM	0 GPM	300.0 AF/YR	148.0 AF/YR	300 GPM	0 GPM	288.3 AF/YR	159.7 AF/YR
G1-25438C	S01 Well 1R	200 GPM			448.0 AF/YR	200 GPM	0 GPM	0.0 AF/YR	0.0 AF/YR	200 GPM	0 GPM	0.0 AF/YR	0.0 AF/YR	200 GPM	0 GPM	0.0 AF/YR	0.0 AF/YR
G1-*09533C/6802	S02, S15, S18 Wells 2.1 +2.2	500 GPM		800 AF/YR		500 GPM	0 GPM	289.9 AF/YR	510.1 AF/YR	500 GPM	0 GPM	587.9 AF/YR	212.1 AF/YR	500 GPM	0 GPM	603.5 AF/YR	196.5 AF/YR
G1-00749C	S02, S15, S18 Wells 2.1 +2.2	20 GPM		10.5 AF/YR		0 GPM	20 GPM	0.0 AF/YR	10.5 AF/YR	0 GPM	20 GPM	0.0 AF/YR	10.5 AF/YR	0 GPM	20 GPM	0.0 AF/YR	10.5 AF/YR
G1-27166C	S11 Well 10	500 GPM		378.5 AF/YR	186.5 AF/YR	500 GPM	0 GPM	261.2 AF/YR	117.3 AF/YR	500 GPM	0 GPM	253.0 AF/YR	125.5 AF/YR	500 GPM	0 GPM	241.3 AF/YR	137.2 AF/YR
G1-06228C/5140	S11 Well 10	100 GPM		22.5 AF/YR		0 GPM	100 GPM	0.0 AF/YR	22.5 AF/YR	0 GPM	100 GPM	0.0 AF/YR	22.5 AF/YR	0 GPM	100 GPM	0.0 AF/YR	22.5 AF/YR
G1-*10373C/7147	S17 Well 4R	200 GPM		224 AF/YR		200 GPM	0 GPM	224.0 AF/YR	0.0 AF/YR	200 GPM	0 GPM	224.0 AF/YR	0.0 AF/YR	200 GPM	0 GPM	224.0 AF/YR	0.0 AF/YR
G1-23022C	S17 Well 4R	550 GPM			880.0 AF/YR	550 GPM	0 GPM	0.0 AF/YR	0.0 AF/YR	550 GPM	0 GPM	0.0 AF/YR	0.0 AF/YR	550 GPM	0 GPM	0.0 AF/YR	0.0 AF/YR
G1-*07653C/6395	S14, S17 Wells 11.1, 4R	100 GPM		160 AF/YR		100 GPM	0 GPM	160.0 AF/YR	0.0 AF/YR	100 GPM	0 GPM	160.0 AF/YR	0.0 AF/YR	100 GPM	0 GPM	160.0 AF/YR	0.0 AF/YR
G1-23897C	S12, S14, S17, Wells 11.2 + 11.1 + 4R	600 GPM		768 AF/YR		600 GPM	0 GPM	768.0 AF/YR	0.0 AF/YR	600 GPM	0 GPM	768.0 AF/YR	0.0 AF/YR	600 GPM	0 GPM	768.0 AF/YR	0.0 AF/YR
G1-26572P	S12 Well 11.2	580 GPM		568.45 AF/YR		0 GPM	580 GPM	182.9 AF/YR	385.5 AF/YR	0 GPM	580 GPM	568.5 AF/YR	0.0 AF/YR	0 GPM	580 GPM	568.5 AF/YR	0.0 AF/YR
G1-22861C	S12 Well 11.2	1000 GPM		1600 AF/YR		0 GPM	1000 GPM	0.0 AF/YR	1600.0 AF/YR	0 GPM	1000 GPM	89.3 AF/YR	1510.7 AF/YR	0 GPM	1000 GPM	139.9 AF/YR	1460.1 AF/YR
G1-00289C	S06, S07 Wells 7+8	3200 GPM		936 AF/YR		3200 GPM	0 GPM	936.0 AF/YR	0.0 AF/YR	3200 GPM	0 GPM	936.0 AF/YR	0.0 AF/YR	3200 GPM	0 GPM	936.0 AF/YR	0.0 AF/YR
G1-25428C	S06, S07 Wells 7+8	2300 GPM		1738 AF/YR		0 GPM	2300 GPM	335.3 AF/YR	1402.7 AF/YR	0 GPM	2300 GPM	791.3 AF/YR	946.7 AF/YR	0 GPM	2300 GPM	716.0 AF/YR	1022.0 AF/YR
G1-26014C	S13 Well 9	0 GPM	2000 GPM		1608.0 AF/YR	0 GPM	0 GPM	738.1 AF/YR	(738.1) AF/YR	0 GPM	0 GPM	0.0 AF/YR	0.0 AF/YR	0 GPM	0 GPM	0.0 AF/YR	0.0 AF/YR
Plateau Zone	**TOTALS =**	**10150 GPM**		**7654.0 AF/YR**		**6150 GPM**	**4000 GPM**	**4200.2 AF/YR**	**3453.7 AF/YR**	**6150 GPM**	**4000 GPM**	**4678.0 AF/YR**	**2975.9 AF/YR**	**6150 GPM**	**4000 GPM**	**4645.4 AF/YR**	**3008.6 AF/YR**
Column Identifiers for Calculations:		A		B		C	=A-C	D	=B-D	E	= A-E	F	=B-F	G	=A-G	H	=B-H

Table 4.14 - Water Right Self-Assessment – Plateau Zone (cont.)

Mouse-over any link for more information. Click on any link for more detailed instructions.

PENDING WATER RIGHT APPLICATIONS: Identify any water right applications that have been submitted to Ecology.

Application Number	New or Change Application?	Date Submitted	Quantities Requested			
			Primary Qi	Non-Additive Qi	Primary Qa	Non-Additive Qa
G1-27883 Pending	Additional point of withdrawal for Wells 1R, 2.1, 2.2 and 10	12/12/1997		1500 GPM	0 AF/YR	1,000 AF/YR
Clarification of G1-27883	Well 1R CG1-00342C	8/7/2001		300 GPM		0
Clarification of G1-27883	Well 1R CG1-25438C	8/17/2001		200 GPM		448 AF/YR
Clarification of G1-27883	Well 10 G1-27166C	8/7/2001		500 GPM		378.5 AF/YR
Clarification of G1-27883	Well 2 G1-09533C	8/7/2001		500 GPM		800 AF/YR
G1-27884 Pending	New Well - Section 36	12/10/1997	1000 GPM		1200 AF/YR	

Table 4.14 - Water Right Self-Assessment – Plateau Zone (cont.)

Mouse-over any link for more information. Click on any link for more detailed instructions.

INTERTIES: Systems receiving wholesale water complete this section. Wholesaling systems must include water sold through intertie in the current and forecasted source production columns above.

Name of Wholesaling System Providing Water	WFI Source # If a source has multiple water rights, list each water right on separate line	Quantities Allowed In Contract		Expiration Date of Contract	Currently Purchased Current quantity purchased through intertie				10-Year Forecasted Purchase Forecasted quantity purchased through intertie				20-Year Forecasted Purchase Forecasted quantity purchased through intertie			
		Maximum Qi Instantaneous Flow Rate	Maximum Qa Annual Volume		Maximum Qi Instantaneous Flow Rate	Current Excess or (Deficiency) Qi	Maximum Qa Annual Volume	Current Excess or (Deficiency) Qa	Maximum Qi 10-Year Forecast	Future Excess or (Deficiency) Qi	Maximum Qa 10-Year Forecast	Future Excess or (Deficiency) Qa	Maximum Qi 20-Year Forecast	Future Excess or (Deficiency) Qi	Maximum Qa 20-Year Forecast	Future Excess or (Deficiency) Qa
CWA (South Reg)	S19 (1 of 2)	0 GPM	0 AF/YR			0 GPM	1126.7 AF/YR	(1126.7) AF/YR	2392 GPM	(2392) GPM	1819.2 AF/YR	(1819.2) AF/YR	2600 GPM	(2600) GPM	1963.9 AF/YR	(1963.9) AF/YR
NE Sammamish 1	S20	0 GPM	0 AF/YR			0 GPM	(0.2) AF/YR	0.2 AF/YR		0 GPM	0.0 AF/YR	0.0 AF/YR		0 GPM	0.0 AF/YR	0.0 AF/YR
NE Sammamish 2	S20	0 GPM	0 AF/YR			0 GPM	0.0 AF/YR	0.0 AF/YR		0 GPM	0.0 AF/YR	0.0 AF/YR		0 GPM	0.0 AF/YR	0.0 AF/YR
NE Sammamish 3	S20	0 GPM	0 AF/YR			0 GPM	0.0 AF/YR	0.0 AF/YR		0 GPM	0.0 AF/YR	0.0 AF/YR		0 GPM	0.0 AF/YR	0.0 AF/YR
NE Sammamish 4	S20	0 GPM	0 AF/YR			0 GPM	0.0 AF/YR	0.0 AF/YR		0 GPM	0.0 AF/YR	0.0 AF/YR		0 GPM	0.0 AF/YR	0.0 AF/YR
Issaquah 1	S21	0 GPM	0 AF/YR			0 GPM	0.0 AF/YR	0.0 AF/YR		0 GPM	0.0 AF/YR	0.0 AF/YR		0 GPM	0.0 AF/YR	0.0 AF/YR
Issaquah 2	S21	0 GPM	0 AF/YR			0 GPM	0.0 AF/YR	0.0 AF/YR		0 GPM	0.0 AF/YR	0.0 AF/YR		0 GPM	0.0 AF/YR	0.0 AF/YR
Interties Plateau Zone	**TOTALS =**	**0 GPM**	**0.0 AF/YR**		**0 GPM**	**0 GPM**	**1126.5 AF/YR**	**(1126.5) AF/YR**	**2392 GPM**	**(2392) GPM**	**1819.2 AF/YR**	**(1819.2) AF/YR**	**2600 GPM**	**(2600) GPM**	**1963.9 AF/YR**	**(1963.9) AF/YR**
Plateau Zone GRAND TOTALS=		**10150 GPM**	**7654 AF/YR**		**6150 GPM**	**4000 GPM**	**5326.8 AF/YR**	**2327.2 AF/YR**	**8542 GPM**	**1608 GPM**	**6497.3 AF/YR**	**1156.7 AF/YR**	**8750 GPM**	**1400 GPM**	**6609.3 AF/YR**	**1044.7 AF/YR**
Column Identifiers for Calculations:		A	B		C	=A-C	D	=B-D	E	=A-E	F	=B-F	G	=A-G	H	=B-H

INTERRUPTIBLE WATER RIGHTS: Identify limitations on any water rights listed above that are interruptible.

Water Right #	Conditions of Interruption	Time Period of Interruption
1		
2		
3		

ADDITIONAL COMMENTS:

1 - Rights used at Wells 2.1 and 2.2 are for well field at that location.
2 - Qi for Well 4R is for service to 650 pressure zone group. Capacity to 700 pressure zone group is 1,800 gpm.
3 - Qi for Well 11.2 is for service to 550 pressure zone group. Capacity to 700 pressure zone group is 1,800 gpm.
4 - Rights used at Wells 7 and 8 are combined
5 - Year 2016 Qi is based on current well pump capacity.
6 - 10 Year Forecast and 20 Year Forecast Qi is based on allocation of demand by current well pump capacity, up to total capacity, before use of CWA as source to meet full demand.
7 - Year 2027 and 2037 Qi (MDD) reliance on CWA (South Reg) less than 10 mgd purchased capacity.
8 - Forecast production values are allocated first to District wells for purposes of water rights assessment only - actual water production strategy including reliance on CWA will be determined annually by the District based on a range of considerations as discussed in Chapter 4.

Table 4.15 - Water Right Self-Assessment – Cascade View Zone

Mouse-over any link for more information. Click on any link for more detailed instructions.

Water Right Permit, Certificate, or Claim # *If water right is interruptible, identify limitation in yellow section below	WFI Source # If a source has multiple water rights, list each water right on separate line plus Well No.	Existing Water Rights Qi= Instantaneous Flow Rate Allowed (GPM or CFS) Qa= Annual Volume Allowed (Acre-Feet/Year) This includes wholesale water sold				Current Source Production – Most Recent Calendar Year Qi = Max Instantaneous Flow Rate Withdrawn (GPM or CFS) Qa = Annual Volume Withdrawn (Acre-Feet/Year) This includes wholesale water sold				10-Year Forecasted Source Production (determined from WSP) This includes wholesale water sold				20-Year Forecasted Source Production (determined from WSP) This includes wholesale water sold			
		Primary Qi Maximum Rate Allowed	Non-Additive Qi Maximum Rate Allowed	Primary Qa Maximum Volume Allowed	Non-Additive Qa Maximum Volume Allowed	Total Qi Maximum Instantaneous Flow Rate Withdrawn	Current Excess or (Deficiency) Qi	Total Qa Maximum Annual Volume Withdrawn	Current Excess or (Deficiency) Qa	Total Qi Maximum Instantaneous Flow Rate in 10 Years	10-Year Forecasted Excess or (Deficiency) Qi	Total Qa Maximum Annual Volume in 10 Years	10-Year Forecasted Excess or (Deficiency) Qa	Total Qi Maximum Instantaneous Flow Rate in 20 Years	20-Year Forecasted Excess or (Deficiency) Qi	Total Qa Maximum Annual Volume in 20 Years	20-Year Forecasted Excess or (Deficiency) Qa
G1-00027C	S16 Well 12R	100 GPM		108 AF/YR		100 GPM	0.0 GPM	86.5 AF/YR	21.5 AF/YR	100 GPM	0.0 GPM	81.0 AF/YR	27.0 AF/YR	100 GPM	0.0 GPM	85.4 AF/YR	22.6 AF/YR
G1-24363C	S16 Well 12R	100 GPM		12 AF/YR		100 GPM	0.0 GPM	12 AF/YR	0.0 AF/YR	100 GPM	0.0 GPM	12.0 AF/YR	0.0 AF/YR	100 GPM	0.0 GPM	12.0 AF/YR	0.0 AF/YR
G1-25963C	S24 Well 13R	200 GPM		224 AF/YR		200 GPM	0.0 GPM	95.9 AF/YR	128.1 AF/YR	200 GPM	0.0 GPM	93.0 AF/YR	131.0 AF/YR	200 GPM	0.0 GPM	97.4 AF/YR	126.6 AF/YR
G1-25831C	S24 Well 13R	62.5 GPM		86.7 AF/YR		60 GPM	2.5 GPM	28.8 AF/YR	57.9 AF/YR	60 GPM	2.5 GPM	27.9 AF/YR	58.8 AF/YR	60 GPM	2.5 GPM	29.2 AF/YR	57.5 AF/YR
Cascade Zone	**TOTALS =**	**462.5 GPM**		**430.7 AF/YR**		**460.0 GPM**	**2.5 GPM**	**223.2 AF/YR**	**207.5 AF/YR**	**460.0 GPM**	**2.5 GPM**	**214.0 AF/YR**	**216.7 AF/YR**	**460.0 GPM**	**2.5 GPM**	**224.0 AF/YR**	**206.7 AF/YR**
Column Identifiers for Calculations:		A		B		C	=A-C	D	=B-D	E	= A-E	F	=B-F	G	=A-G	H	=B-H

PENDING WATER RIGHT APPLICATIONS: Identify any water right applications that have been submitted to Ecology.

Application Number	New or Change Application?	Date Submitted	Quantities Requested			
			Primary Qi	Non-Additive Qi	Primary Qa	Non-Additive Qa
None						

Table 4.15 - Water Right Self-Assessment – Cascade View Zone (cont.)

Mouse-over any link for more information. Click on any link for more detailed instructions.

INTERTIES: Systems receiving wholesale water complete this section. Wholesaling systems must include water sold through intertie in the current and forecasted source production columns above.

Name of Wholesaling System Providing Water	WFI Source # If a source has multiple water rights, list each water right on separate line	Quantities Allowed In Contract		Expiration Date of Contract	Currently Purchased Current quantity purchased through intertie				10-Year Forecasted Purchase Forecasted quantity purchased through intertie				20-Year Forecasted Purchase Forecasted quantity purchased through intertie			
		Maximum Qi Instantaneous Flow Rate	Maximum Qa Annual Volume		Maximum Qi Instantaneous Flow Rate	Current Excess or (Deficiency) Qi	Maximum Qa Annual Volume	Current Excess or (Deficiency) Qa	Maximum Qi 10-Year Forecast	Future Excess or (Deficiency) Qi	Maximum Qa 10-Year Forecast	Future Excess or (Deficiency) Qa	Maximum Qi 20-Year Forecast	Future Excess or (Deficiency) Qi	Maximum Qa 20-Year Forecast	Future Excess or (Deficiency) Qa
CWA (North Reg)	S19 (1 of 2)	200 GPM	160.0 AF/YR		200 GPM	0 GPM	5.9 AF/YR	154 AF/YR	0 GPM	200 GPM	0	160 AF/YR	0 GPM	200 GPM	0	160 AF/YR
Union Hill 1	S22															
Union Hill 2	S22															
Ames Lake	S23															
Interties Cascade View Zone	**TOTALS =**	**200 GPM**	**160.0 AF/YR**		**200 GPM**	**0 GPM**	**5.9 AF/YR**	**154 AF/YR**	**0 GPM**	**200 GPM**	**0 AF/YR**	**160 AF/YR**	**0 GPM**	**200 GPM**	**0 AF/YR**	**160 AF/YR**
Cascade View Zone	**GRAND TOTAL**	**663 GPM**	**591 GPM**		**660 GPM**	**3 GPM**	**229 AF/YR**	**362 AF/YR**	**460 GPM**	**203 GPM**	**214 AF/YR**	**377 AF/YR**	**460 GPM**	**203 GPM**	**224 AF/YR**	**367 AF/YR**
Column Identifiers for Calculations:		A	B		C	=A-C	D	=B-D	E	=A-E	F	=B-F	G	=A-G	H	=B-H

INTERRUPTIBLE WATER RIGHTS: Identify limitations on any water rights listed above that are interruptible.

Water Right #	Conditions of Interruption	Time Period of Interruption
1		
2		
3		

ADDITIONAL COMMENTS:

1 - Year 2016 Qi is based on current well pump capacity.

2 - 10 Year Forecast and 20 Year Forecast Qi is based on allocation of demand by current well pump capacity, up to total capacity, before use of CWA as source to meet full demand.

3 - Forecast production values are allocated first to District wells for purposes of water rights assessment only - actual water production strategy including reliance on CWA will be determined annually by the District based on a range of considerations as discussed in Chapter 4.

4.4 Aquifer Storage and Recovery Program

4.4.1 Overview

In 2005, the District prepared and obtained the first two ASR permits issued in the State of Washington under the recently adopted ASR rules and regulations. The permits are included in Appendix C. These permits allowed the District 10 years of operational pilot testing (2005 - 2015) to evaluate the effectiveness of an ASR program within the District's service area.

The ASR rules and regulations establish standards for reviewing and permitting ASR project applications. As a result, water purveyors considering ASR as a water resource management tool are subject to increased monitoring, evaluation, and reporting efforts.

In 2015 the District completed its 10th consecutive year of operational testing of the 2005 10-year permits, injecting over one billion gallons of potable water into the Cascade View Aquifer System (CVAS) and the Plateau Aquifer System (PAS). During this testing period, the District collected significant water quality and water level data, developed viable methods in evaluating storage and recovery through water quality tracing analysis and developed a 3D numerical groundwater model to simulate ASR operation to answer pressing environmental assessment questions during storage and recovery, including the fate of unrecovered recharge water. The injection and recovery locations varied in the Plateau Zone. Wells 4 and 5 were utilized in 1998, and other years utilized Wells 1R, 2.1 and 10 individually or combined. Recovery occurred through these same wells. In the Cascade View Zone Well 12 and 12R have been the ASR injection and recovery location. Table 4-16 provides the amounts of ASR injected each year.

On December 4, 2015, the District met with DOE and was told that DOE was ready to approve an extension of the ASR permits with recoverable quantities for the CVAS program pending an application by the District that provided a technically supported recoverable quantity. DOE indicated they were hesitant to provide a similar permit extension for the PAS program.

The primary reason provided by DOE for the less achievable prospects of obtaining an ASR permit extension for the PAS program was that the State recognized arguments made by the Tribes (Muckleshoot) that the Zone II aquifer in the PAS is not storing the injected volume. While the District provided significant technical documentation in support of the ASR program, the State did not provide any technical documentation to support the Tribe's arguments.

During the first quarter of 2016, the District followed the State's recommendation to submit a permit extension for the CVAS program and submitted a permit extension request for the CVAS with an estimate for recoverable quantities at an 88% recovery efficiency. In May 2016, the District received an appeal by the Tulalip Tribe to the extension request for the CVAS program stating similar comments to those made by the Muckleshoot Tribe on the PAS program. The comments inferred there was a lack of ASR storage and would

have potential impacts during the recovery phase. Once again, this appeal did not include any supporting technical documentation.

The District provided a technical memorandum in June 2016 responding to the Tulalip Tribe's comments and is currently waiting on a response from DOE with regards to its permit extension request for the CVAS program.

In December 2017, DOE provided the District a 10-year extension for the PAS program but limited the operational testing of ASR to the deeper aquifer zones III and IV.

Table 4-16
ASR Injection Volume and Recovery Compared to Existing Water Rights

Year	Wells in which ASR was Conducted	Water Right Total for Wells (acre-ft)	Total Water Injected (acre-ft)	Total Water Pumped (acre-ft)
Plateau Aquifer System				
1993	Well 1R	448	73	250
1994	Well 1R, 2.1 and 10	1659[1]	248[2]	406[3]
1995			No Injection	
1996			No Injection	
1997			No Injection	
1998	Well 4 and 5	1104	26	199
1999	Well 11.1	628	24	131
2000			No Injection	
2001	Well 1R	448	147.3	186
2002	Well 1R	448	260	78
2003			No Injection	
2004	Well 1R	448	217.5	115
2005	Well 1R	448	161	270
2006	Well 1R	448	333	261
2007	Well 1R	448	259	350
2008	Wells 1R, 10 and 15	1659[1]	520[2]	1319[3]
2009	Wells 1R, 10 and 15	1659[1]	629[2]	1028[3]
2010	Wells 1R, 10 and 15	1659[1]	635[2]	706[3]
2011			No Injection	
2012			No Injection	

Table 4-16 (cont.)
ASR Injection Volume and Recovery Compared to Existing Water Rights

Year	Wells in which ASR was Conducted	Water Right Total for Wells (acre-ft)	Total Water Injected (acre-ft)	Total Water Pumped (acre-ft)
Plateau Aquifer System (cont.)				
2013			No Injection	
2014			No Injection	
2015			No Injection	
2016			No Injection	
Cascade View Aquifer System - Well 12/12R				
2005			No Injection	
2006	Well 12R	114	119	77.6
2007	Well 12R	114	111	115
2008	Well 12R	114	119	83
2009	Well 12R	114	145	102
2010	Well 12R	114	155	74
2011	Well 12R	114	160	98
2012	Well 12R	114	102	65
2013	Well 12R	114	100	72
2014	Well 12R	114	110	133
2015	Well 12R	114	51	108
2016			No Injection	

Notes:

1 - Total certificated water rights for Zone II wells 1R, 2.1 and 10.

2 - Total Injected Volume of all Zone II ASR wells operational that year

3 - Incudes pumping totals from all Zone II production wells for that year.

4.4.2 Program Objectives

In an effort to manage their groundwater resources and water rights efficiently, improve natural water quality in the receiving aquifers and minimize adverse impacts to the environment, the District has identified the following objectives for its ASR Program:

Objective 1. Improve aquifer water quality in the vicinity of the recovery zone.

Objective 2. Utilize the 565 acre-ft currently allocated to ASR under existing and certified water rights.

Objective 3. Optimize winter season withdrawals by increasing seasonal (winter only)

water rights for storage and recovery and thereby reduce potentially adverse peak season impacts on the recharge supply source.

Objective 4. Improve sustainability of groundwater resources by restoring or raising aquifer water levels in dewatered aquifers.

Objective 5. Provide more consistent water quality and realize a cost savings by being less dependent on regional water supply to offset peak demand.

4.4.3 Interpretation of Storage and ASR Program Success

The District has interpreted storage, evaluated ASR program success and demonstrated recovery using their 3D numerical groundwater model, measured water levels, and chemical tracing of the injected water. Chemical tracing is accomplished by measuring changes in water quality parameters that markedly differ between the injection source water and the receiving aquifer water. These lines of evidence have been used for evaluating and approving ASR program effectiveness for other ASR projects throughout the State, including the Yakima and Kennewick ASR programs.

Water quality tracing information collected during ASR injection and recovery shows treated ASR water is being stored and subsequently recovered through pumping at volumes equivalent to 75% of the total injected into the confined and saturated portions of aquifer Zone II in the PAS program. These data indicate that although there is some mixing and dilution, the injected water replaces the native groundwater. Numerical modeling results of the District's ASR program indicate the increase in recharge-induced head at the injection point (Well 1R) rapidly dissipates away from the well (1R) so that there is no measurable change in gradient near any stream or the plateau margins indicating the artificial recharge occurring at the District's wells does not increase stream flow, or spring discharge at the plateau margins.

For the CVAS program permit extension, the District formally requested that 88% of the ASR water volume injected on an annual basis be allowed for storage and subsequent recovery above existing water rights. This percentage is based on the average recovery efficiency that has been calculated over the 10 years of testing using empirical pre-injection and post-recovery water level data obtained from the test monitoring.

In summary, the District maintains that the ASR water injected and stored in the PAS and CVAS is recoverable as confirmed through field and laboratory water quality data, water level measurements, and modeled simulations.

The District has made significant efforts to address the Tribes' (Tulalip and Muckleshoot) concerns. Water quality tracing is a standard method for evaluating aquifer storage and recovery in other areas nationally as well as within professional publications on ASR. The evaluation of a sustained, post-ASR injection groundwater level mound during the recovery phase, which the Tribes contend is the primary line of evidence for storage, expands the requirements of the State's ASR code (WAC 173-150-120). Ongoing, State-

supported, programs in other areas of the State evaluate ASR success on water quality tracing or water balance methods[3] and do not focus or establish criteria on the development and longevity of a residual water level mound post-injection as the performance measure for determining ASR program success.

The locations of the groundwater basins for the District's ASR programs are contentious. The State's reluctance to make decisions on the quantities of storage and recoverable quantities in these basins, even with the breadth of scientific evidence presented to them supporting effective storage and recovery without impacting existing surface water rights, has severely limited the success of the ASR programs since there have been no allowances by the State to use the injected water above existing water right volumes. Information gathered from other ASR programs permitted throughout the State indicates inconsistent measures are used to approve storage and recovery volumes. While the District waits on decisions by the State to extend the CVAS ASR permit and provide recoverable quantities, the District will continue to pursue and implement other water resource management options as presented in this Plan for maintaining a reliable supply source while maximizing environmental benefits to the local water resources.

4.5 Water System Reliability

4.5.1 Source Reliability

The following sections summarize the nature of the District's source water aquifers and their reliability and low susceptibility due to depth. Further detail regarding District well characteristics is provided in Chapter 5. In addition, as noted previously in Section 4.2, the District's overall supply reliability is bolstered by the availability of regional water supply through Cascade Water Alliance.

4.5.1.1 Plateau Zone

The District's Plateau Zone currently obtains its water supply from production wells completed in two separate aquifer systems:

- Valley Aquifer System (VAS)
- Plateau Aquifer System (PAS)

The District has sponsored extensive investigations of both aquifer systems including geophysical exploration, test drilling and monitoring well installation, continuous water-level monitoring, wellhead protection plans, pilot testing of artificial recharge, and numerical modeling (in progress). The results of these studies have provided the following information.

[3] - Kennewick ASR Program success is based on simple water temperature tracing – ambient water is quite warm since it's a deep aquifer system. Successful recovery of injected water, which is cooler, is based on water that is less than 70 degrees F
- Yakima ASR Program Recovery efficiency is based on a water balance (injection volume > than recovery volume) and numerical model estimates.

Valley Aquifer System. The three District VAS production wells penetrate unconsolidated deltaic sediments deposited in ancestral Lake Sammamish. Several aquifer zones are separated by silty aquitards, which confine the water in each zone. The higher (non-pumping) water levels in successively deeper zones help prevent contamination from surface sources.

Plateau Aquifer System. The PAS is composed primarily of three aquifer zones: Zone II, Zone III, and Zone IV. Wells 1R, 2, 2.2, 4R, 10, 11.1, 11.2, and 15 (Well 15 is not in use) are completed in one of the three aquifer zones. In the PAS, water levels are lower in successively deeper zones, indicating recharge conditions.

4.5.1.2 Cascade View Zone

Wells 12R and 13R serve the Cascade View Zone. Well 12R replaced Well 12 in December 1999 and is located 15 feet east of Well 12. These wells (originally designated Wells 1 and 4 by Cascade View Water District prior to the 1995 merger) are completed in three separate aquifer zones. The lower two zones are believed to be continuous with PAS Zones III and IV.

4.5.2 Distribution System Reliability

Reliability in the District's distribution system is provided primarily through adequate standby storage being made available to all pressure zones in the event that supply sources are unavailable for a period of time. As described in Section 3.2.2, the District has sufficient storage volume to satisfy standby storage requirements throughout the 20-year planning period, while also providing for fire suppression storage requirements (i.e., meaning standby and fire suppression storage volumes are not "nested"). Furthermore, due to the interconnectedness of pressure zones within the Plateau Zone via PRVs and booster pump stations, volumes provided by each reservoir are available to provide standby storage throughout this service zone, increasing the reliability of the distribution system to provide water on an emergency basis to all pressure zones, even in the event that a given reservoir is out of service.

4.6 Interties

District interties with other water utilities provide an additional element of system reliability.

The District receives water supply from Cascade Water Alliance through the South Regional Connection intertie for the Plateau Zone and through the North Regional Connection intertie for the Cascade View Zone. The Cascade supply is governed by the Cascade Water Alliance Amended and Restated Interlocal Contract adopted by Cascade Resolution No. 2012-06 on March 28, 2012 and approved by the District Resolution No. 4161 on June 18, 2012. The locations of the regional connections are shown on Figures

1-8 and 1-11.

The Plateau Zone has four interties with Northeast Sammamish Sewer and Water District and two interties with the City of Issaquah. The location of these interties is shown in Figure 1-8. Table 6-13 lists the interties and provides location details. Two of the interties with Northeast Sammamish Sewer and Water District are free-flowing in either direction. They enable water to flow to and from the 3-MG Tank, located within the Plateau Zone, to serve customers in the Northeast Sammamish Sewer and Water District's service area. All other interties are intended for emergency use.

The Cascade View Zone has two interties with Union Hill Water Association, as shown on Figure 1-11, although they are not operational without a booster pump connection. They are in place for emergency use only. Table 6-13 lists the interties and provides location details.

An emergency intertie serving the Ames Lake Water Association was recently completed. This intertie is currently used for emergency supply to Ames Lake Water Association and could also be used for wheeling regional water through the District to Ames Lake.

Copies of the Intertie Agreements with Northeast Sammamish Sewer and Water District, City of Issaquah, Ames Lake Water Association, and the Union Hill Water Association are included in Appendix D.

This page intentionally left blank.

CHAPTER FIVE – SOURCE WATER PROTECTION

This page intentionally left blank.

5. Source Water Protection

Table of Contents

5.1 Overview……5-1
5.2 Susceptibility Assessment……5-2
5.3 Wellhead Protection Areas……5-2
5.4 Contaminant Source Inventory…… 5-3
5.4.1 Inventory Approach…….. 5-3
5.4.2 Data Sources…….. 5-3
5.4.3 Inventory Results…….. 5-7
5.4.3.1 Lower Reid Infiltration Gallery…….. 5-15
5.4.3.2 Per- and Polyfluorinated Compound (PFAS) Plume……... 5-15
5.4.4 Additional Potential Sources of Contamination…….. 5-17
5.5 Notification…… 5-17
5.6 Contingency Plan…… 5-21
5.7 Spill Response…….. 5-22
5.8 Regional Coordination…… 5-23

Tables

5-1 Summary of Water Well Data…….. 5-5
5-2 List of Potential Contaminant Sources……5-7
5-3 Potential Source Contamination Notifications……5-20
5-4 Emergency Response Plan Emergency Responders……5-22

Figures

5-1 Inventory of Potential Contaminant Sources……5-13
5-2 Inventory of Potential Contaminant Sources (Wells 7, 8, 9)……..5-14
5-3 Lower Issaquah Valley PFAS Characterization Exploration Areas……..5-19

This page intentionally left blank.

5. Source Water Protection

The District recognizes the value of its groundwater resources and the need to preserve groundwater and the aquifer which supports it as sustainable resources. The District Board of Commissioners adopted a Drinking Water Quality Policy Statement by Resolution No. 4780 on May 7, 2018, included in Appendix J. Federal and state law requires all Group A public water systems that use groundwater as their source of supply to develop a wellhead protection program (WHPP). This section provides a summary of key elements of the District's WHPP.

5.1 Overview

The District obtains groundwater from three sources: the Plateau and Cascade View production wells which draw from the Plateau Aquifer System (PAS), the Cascade View Aquifer System (CVAS) and the Lower Issaquah Valley production wells which draw from the Valley Aquifer System (VAS). The technical portions of the WHPPs for these sources are presented in two documents: (1*) Wellhead Protection Program for Plateau and Cascade View Wells, Sammamish Plateau Water and Sewer District* (AGI Technologies, 1998), and (2*) Lower Issaquah Valley Wellhead Protection Plan,* Volumes 1, 2, and 3 (Golder Associates et al., 1993–1995).

The WHPP must, at a minimum, contain the following seven components, as defined in WAC 246-290, Section 135, Source Water Protection:

- A susceptibility assessment including susceptibility forms for each well.
- A wellhead protection area (WHPA) delineation for each well within the 1-, 5-, and 10-year time of travel boundaries marked.
- Contaminant source inventory within the WHPA boundaries.
- Documentation of purveyor's notification to all owners/operators of potential sources of contamination within the WHPA boundaries.
- Documentation of purveyor's notification to regulatory agencies and local governments of the boundaries of the WHPAs and the findings of the potential sources inventory.
- A contingency plan to ensure consumers have an adequate water supply if the principal source becomes contaminated.
- A spill response plan and documentation of coordination with local emergency responders including police, fire, and health departments. The plan must include WHPA boundaries, results of a susceptibility assessment, contaminant source inventory findings, and a source contingency plan.

The following sections summarize the information presented in the two WHPPs, and supplement or update that material as appropriate to complete the WHPP components.

5.2 Susceptibility Assessment

A susceptibility assessment is required of public drinking water purveyors as the initial step in the WHPA delineation process. The assessment forms include information on well construction and production, local aquifer characteristics, and local potential contamination sources. Susceptibility forms for the wells in the Plateau Zone, Cascade View Zone, and Lower Issaquah Valley are included in Appendix O. Table 5-1 presents a summary of the pertinent well data presented in each of the WHPPs (AGI, 1998; Golder Associates, et al., 1993–1995).

5.3 Wellhead Protection Areas

A WHPA is defined as the surface and subsurface area surrounding a well, wellfield, or spring supplying a public water supply through which potential contaminants are likely to pass and reach the wells. In Washington, WHPAs are defined based on the time of travel (TOT) for groundwater to move from its point of infiltration to its point of discharge at the well. The WHPA is divided into three primary zones based on 1-, 5- and 10-year TOT rates. The 10-year TOT boundary forms the boundary of the WHPA and defines the area to be inventoried and managed to reduce the risk of potential contamination.

In general, the District has three WHPAs: Cascade View wells, Plateau wells, and Lower Issaquah Valley wells. WHPA delineations have been developed for each well with the 1-, 5-, and 10-year TOT boundaries marked. Figures 5-1 and 5-2 present the boundaries for each of the wells within the three WHPAs.

Recently, the District updated the WHPA boundaries delineated by the District's developed and calibrated three-dimensional finite element groundwater model for the VAS. Simulations using this model for the Lower Issaquah Valley wells were run and compared to the earlier results of the WHPA delineation developed using analytical methods. The Hydrogeologic Assessment and Update to Lower Issaquah Valley Aquifer Production Wells 7, 8 and 9 Wellhead Protection Areas is included in Appendix P. The results of the updated VAS WHPAs show similarities in the width of the capture zones, but the 10-year TOTs for District Wells 7 and 8 extend further up the Issaquah Valley than TOT previously estimated by the analytical method. The updated District Well 9 WHPA delineation presents a shorter TOT for the 5- and 10-year than the earlier WHPA delineation that extends eastward toward the Tradition Plateau. The updated WHPA takes into account recharge at the Tradition Plateau, which is a critical mountain front recharge area for the VAS.

In 2007 the District reviewed WHPA boundaries for the Plateau Aquifers, also using a three-dimensional finite element groundwater model. The 2007 study included considerations of ASR. The WHPAs delineated using the finite element model were smaller than those previously defined using analytical methods. To provide conservative protection of the groundwater resources, the District continues to utilize the larger contributing area delineated by the analytical method. This study is also provided in

Appendix P.

5.4 Contaminant Source Inventory

5.4.1 Inventory Approach

The District draws groundwater from general well field areas designated as Cascade View, the Sammamish Plateau, and the Lower Issaquah Valley. The wells that are currently active in these areas are:

1) Cascade View Wells 12R and 13R.
2) Sammamish Plateau Wells 1, 2.1 & 2.2, 4R, 10, 11.1 and 11.2.
3) Lower Issaquah Valley Wells 7, 8, and 9.

The locations of these wells are shown on Figures 5-1 and 5-2.

The inventory of potential contaminant sources within the WHPAs involved a search of the Washington State Department of Ecology's Facility/Site Identification System (F/SID) database and field reconnaissance.

5.4.2 Data Sources

The F/SID database is an internet-based system (accessed via the following website: http://www.ecy.wa.gov/fs/) and contains a compilation of potential contaminant site information identified under the following categories: State Cleanup Sites, Federal Superfund Sites, Hazardous Waste Generators, Solid Waste Facilities, Underground Storage Tanks, Dairies, and Enforcement. The use of this comprehensive source of information is a standard approach accepted by DOH to facilitate updates to potential contaminant source inventories.

A GIS analysis was performed wherein potential contaminant sites noted in the F/SID database to be located within a District WHPA were geo-referenced and mapped (see Figures 5-1 and 5- 2). The spatial integrity of these locations was then verified first by using Google Earth to confirm that land uses and structures in the vicinity of the F/SID site locations were consistent with the noted site activities. This resulted in fine-tuning of the mapping, as some facility addresses identified in the F/SID were inaccurate.

Further "ground-truthing" of site locations was achieved through a windshield survey conducted by District staff in the fall of 2016. [Note that this work was done prior to the model update of the Wells 7, 8 and 9 WHPA.] This resulted in further revision to the list and mapping of potential contaminant source sites, as the activities and/or structures at some noted locations did not match the activities identified in the F/SID.

Also noted in the survey were injection well locations identified in Ecology's Underground Injection Control (UIC) program database, as of September 2017. One injection well site was identified, serving the purpose of managing stormwater flows by

returning water to the ground. [UIC wells that Automatically Meet the Non-endangerment Standard were not included.]

In addition to the information gained from the above activities, the extent of sewer service provision throughout the District WHPAs was mapped, based upon information contained in the District's GIS and data provided by the City of Issaquah.

Table 5-1
Summary of Water Well Data

Completion						Mapped Water Level				Construction		
Area	Well Name	Wellhead Elevation (ft msl)[1]	Depth Drilled (ft)	Depth (ft)	Elevation (ft msl)[1]	Depth (ft)	Elevation (ft msl)	Mapping Date	Construct Date	Surface Seal		Casing Depth (ft)
										Material[2]	Thickness (ft)	
Plateau Zone:												
Klahanie	1R	473.12	159	137 to 147	336 to 326	126	347.12	Jan-95	Mar-84	C	33	137
Klahanie	2	417.1	132	96 to 116	321 to 301	70.64	346.76	Jan-95	Aug-68	C	20	96
Klahanie	2.2	419	180	150 to 175	269 to 244	64.13	354.87	Jan-95	May-93	B	32	180
Inglewood Channel	4R	350	1207	710 to 845	-360 to -495	217	133	Mar-04	Mar-04	C	695	695
Issaquah Valley	7	70	151	83 to 151	-13 to -81	6	64	1/95?	Mar-84	ND	80	83
Issaquah Valley	8	73	190	105 to 189	-32 to -116	13	60	1/95?	Aug-84	C + B	80	105
Issaquah Valley	9	75.5	303	194 to 219	-118.5 to -143.5	16	59.5	1/95?	Jul-91	C + B	64	194
Klahanie	10	423.79	193	135 to 155 173 to 183	289 to 268 251 to 241	75.64	348.15	Jan-95	Aug-93	C	40	135
Inglewood Channel	11.1	358.11	499	409 to 419 426 to 431 461 to -486	-51 to -128	230	128.11	Jul-93	Aug-93	C	43	409

Table 5-1 (cont.)
Summary of Water Well Data

Completion						Mapped Water Level				Construction		
Area	**Well Name**	**Wellhead Elevation (ft msl)[1]**	**Depth Drilled (ft)**	**Depth (ft)**	**Elevation (ft msl)[1]**	**Depth (ft)**	**Elevation (ft msl)**	**Mapping Date**	**Construct Date**	**Surface Seal**		**Casing Depth (ft)**
Inglewood Channel	11.2	358.01	884	785 to 821 839 to 880	-427 to -522	232	126.01	Aug-95	Aug-93	C	43	785
Cascade View Zone:												
Ames Lake	12R	645	145	135 to 145	510 to 500	122.7	522.3	Dec-99	Mar-61	ND	11	135
Ames Lake	13R	665	960	810 to 949	-145 to -284	516	149	Jan-06	Jan-06	C	810	810

Sources:

Wellhead Protection Program for Plateau and Cascade View Wells, Sammamish Plateau Water and Sewer District, AGI Technologies, 1998.

Lower Issaquah Valley Wellhead Protection Plan, Volume I, Golder Associates, et al., 1993.

1 - Feet above mean sea level using USCGS datum

2 - Seal Materials: C = cement grout, B = bentonite chips, ND = no further detail on driller's log

5.4.3 Inventory Results

Table 5-2 provides a listing of potential groundwater contaminant sites located within District WHPAs, based upon the review of data sources described above, along with summary information for each site. Additional information for those sites identified in the F/SID is available by querying the F/SID website. The sites listed in Table 5-2 are depicted in Figures 5-1 and 5-2.

In total, 119 sites were identified as having characteristics reflective of potential groundwater contamination. Most (81) of the sites are located within the heavily developed areas comprising the WHPAs of District Wells 7, 8, and 9. The remaining 38 sites are located within the WHPAs of other District wells.

Of the 81 sites located in the Lower Issaquah Valley, 31 are located within the 10-year time-of- travel zone of Wells 7, 8, and 9, while 35 are located within the 5-year time-of-travel zone of these wells. The remaining 15 sites are in the 1-year time-of-travel zone.

Table 5-2
List of Potential Contaminant Sources

Site ID	Facility Name	Type	Well(s)	WHPA Zone
1	Black Nugget Mine SW Creek	State Cleanup Site	1	10
2	Albert's Jewelers	Source Control Inspection	2	1
3	Hawkins Orthodontics	Source Control Inspection	2	1
4	Issaquah Nails	Source Control Inspection	2	1
5	Klahanie Center Veterinary Hospital	Hazardous Waste Generator	2	1
6	Klahanie Chevron	Underground Storage Tank	2	1
7	Klahanie Cleaners	Hazardous Waste Generator	2	1
8	Klahanie Family Dentistry	Source Control Inspection	2	1
9	Sundance at Klahanie	Source Control Inspection	2	1
10	Swedish Primary Care	Hazardous Waste Generator	2	1
11	Klahanie Mountain View Pool	Source Control Inspection	2	5
12	Summerwalk at Klahanie	Source Control Inspection	2	5
13	Tanglewood at Klahanie	Source Control Inspection	2	5
14	Barry Feder DDS PS	Source Control Inspection	7	1
15	Dirks Fine Drycleaning	Hazardous Waste Generator, Voluntary Cleanup Sites	7	1

Table 5-2 (cont.)
List of Potential Contaminant Sources

Site ID	Facility Name	Type	Well(s)	WHPA Zone
16	Sammamish Plateau Water Well 9	Emergency/Haz Chem Rpt TIER2	7	1
17	The Boarding House	Source Control Inspection	7	1
18	Boehm's Candies, Inc.	Source Control Inspection	9	1
19	Eastside Pediatric Dental Group	Source Control Inspection	9	1
20	King County DOT DPW Issaquah Pit	LUST Facility	9	1
21	Klahanie Information Center/Lakeside Pool	Source Control Inspection	10	5
22	John M Rossi DDS	Source Control Inspection	11	5
23	Safeway Store 555	Source Control Inspection	11	5
24	Bella Cleaners	Hazardous Waste Generator	11	10
25	Benjamin Moore Paint Store	Hazardous Waste Generator	11	10
26	Ogata Professional Building	Source Control Inspection	11	10
27	Plateau Motors	Hazardous Waste Generator	11	10
28	Plateau Shell	Underground Storage Tank	11	10
29	Red Carpet Dry Cleaners	Hazardous Waste Generator	11	10
30	Rhonda Newton DDS	Source Control Inspection	11	10
31	Sammamish Highlands 76 Station	Underground Storage Tank	11	10
32	Sammamish Highlands Veterinary Hospital	Hazardous Waste Generator	11	10
33	Redmond Fire Station 14	Source Control Inspection	12	5
34	Sammamish Plateau Water	Emergency/Haz Chem Rpt TIER2	12	5
35	Eastlake High School	Source Control Inspection	4,11	1
36	Oil Can Henry's	Hazardous Waste Generator	4,11	5
37	Eastside Catholic School	Source Control Inspection	4,11	10
38	Sammamish Plateau Water Well 11	Emergency/Haz Chem Rpt TIER2	4,11	10

Table 5-2 (cont.)
List of Potential Contaminant Sources

Site ID	Facility Name	Type	Well(s)	WHPA Zone
39	76 Station	Underground Storage Tank	7,8,9	1
40	Arco	Underground Storage Tank	7,8,9	1
41	City of Issaquah Facility	Hazardous Waste Generator	7,8,9	1
42	City of Issaquah Maintenance Facility Stormwater	Underground Injection Control	7,8,9	1
43	East Gilman Professional Center	Source Control Inspection	7,8,9	1
44	I-90 Motorsports Service Department	Hazardous Waste Generator	7,8,9	1
45	I-90 Motorsports Service Department	Hazardous Waste Generator	7,8,9	1
46	Integrity Automotive	Hazardous Waste Generator	7,8,9	1
47	Lakeside industries/Cadman sand and gravel	Hazardous Waste Generator	7,8,9	1
48	Learning Rx	Source Control Inspection	7,8,9	1
49	Medical Center of Issaquah	Hazardous Waste Generator	7,8,9	1
50	O'Brien Professional Building	Source Control Inspection	7,8,9	1
51	Pogacha Restaurant	Source Control Inspection	7,8,9	1
52	Virginia Mason Medical Center	Hazardous Waste Generator	7,8,9	1
53	Westfarm Foods Issaquah	Minor Industrial	7,8,9	1
54	Abra Auto Body & Glass	Hazardous Waste Generator	7,8,9	5
55	Angolkar 4 Smiles Orthodontics	Source Control Inspection	7,8,9	5
56	Annotto Bay Veterinary Clinic	Hazardous Waste Generator	7,8,9	5
57	Big O Tires Gilman Blvd	Hazardous Waste Generator	7,8,9	5
58	BUS GARAGE	Underground Storage Tank	7,8,9	5
59	Casey’s Shell	Hazardous Waste Generator	7,8,9	5

Table 5-2 (cont.)
List of Potential Contaminant Sources

Site ID	Facility Name	Type	Well(s)	WHPA Zone
60	Chevron 95399	Hazardous Waste Generator, Voluntary Cleanup Sites, LUST Facility, Emergency/Haz Chem Rpt TIER2	7,8,9	5
61	Darigold Issaquah	Hazardous Waste Planner, LUST Facility	7,8,9	5
62	Douglas L Perkins DDS	Source Control Inspection	7,8,9	5
63	Dynafios	Source Control Inspection	7,8,9	5
64	Evergreen Autobody	Hazardous Waste Generator	7,8,9	5
65	Flintofts Funeral Home	Hazardous Waste Generator	7,8,9	5
66	Glen Yorita DDS	Source Control Inspection	7,8,9	5
67	Gramore Development	Hazardous Waste Generator	7,8,9	5
68	Grange Supply Inc	Hazardous Waste Generator, LUST Facility	7,8,9	5
69	Healy Sunset Building	Source Control Inspection	7,8,9	5
70	I-90 Marine Center	Source Control Inspection	7,8,9	5
71	Issaquah City Facilities	Hazardous Waste Generator, Hazardous Waste Planner, Haz Waste Management Activity	7,8,9	5
72	Issaquah City PW Operations	Haz Waste Management Activity, Hazardous Waste Generator	7,8,9	5
73	Issaquah City Sunset	Underground Storage Tank	7,8,9	5
74	Issaquah Highlands Lower Reid Infiltration Gallery	Enforcement Final	7,8,9	5
75	Issaquah Medical Building	Hazardous Waste Generator	7,8,9	5
76	Issaquah Veterinary Hospital	Source Control Inspection	7,8,9	5
77	Marks Japanese & European Auto	Source Control Inspection	7,8,9	5
78	Minuteman Press	Hazardous Waste Generator	7,8,9	5

Table 5-2 (cont.)
List of Potential Contaminant Sources

Site ID	Facility Name	Type	Well(s)	WHPA Zone
79	Ohana Sushi Bar & Grill	Source Control Inspection	7,8,9	5
80	Oil Can Henrys	Hazardous Waste Generator	7,8,9	5
81	Pacific West Medical Supplies	Hazardous Waste Generator	7,8,9	5
82	Perry Stained Glass Studio	Source Control Inspection	7,8,9	5
83	Shell 119	Source Control Inspection	7,8,9	5
84	Shirley Place/Issaquah Cannabis Co	Source Control Inspection	7,8,9	5
85	Site One Landscape Supply	Source Control Inspection	7,8,9	5
86	Tikka Masala	Source Control Inspection	7,8,9	5
87	Vacant	Source Control Inspection	7,8,9	5
88	XXX Root Beer Restaurant	Source Control Inspection	7,8,9	5
89	Arnold R Sims DDS	Source Control Inspection	7,8,9	10
90	Ben Franklin Issaquah	Hazardous Waste Generator	7,8,9	10
91	Benjamin Moore Paint Store	Hazardous Waste Generator	7,8,9	10
92	Cat Clinic of Issaquah	Source Control Inspection	7,8,9	10
93	City of Issaquah Facility	Hazardous Waste Generator	7,8,9	10
94	Cougar Mountain Veterinary Hospital	Source Control Inspection	7,8,9	10
95	Domino's Pizza	Source Control Inspection	7,8,9	10
96	Eastside Fire & Rescue	Source Control Inspection	7,8,9	10
97	Issaquah Brewhouse	Source Control Inspection	7,8,9	10
98	Issaquah City Food Clothing	Hazardous Waste Generator	7,8,9	10
99	Issaquah Cleaners	Source Control Inspection	7,8,9	10
100	Issaquah Feed & Service	Voluntary Cleanup Sites, Underground Storage Tank, LUST Facility	7,8,9	10
101	Issaquah Furniture Inc	Source Control Inspection	7,8,9	10
102	Issaquah High School	Hazardous Waste Generator	7,8,9	10
103	Issaquah Middle School	Underground Storage Tank	7,8,9	10

Table 5-2 (cont.)
List of Potential Contaminant Sources

Site ID	Facility Name	Type	Well(s)	WHPA Zone
104	Issaquah Middle School	Source Control Inspection	7,8,9	10
105	Issaquah Nursing and Rehabilitation	Hazardous Waste Generator	7,8,9	10
106	Issaquah Old Police Station	Underground storage tank, LUST facility	7,8,9	10
107	Issaquah Professional Center	Source Control Inspection	7,8,9	10
108	Issaquah School District 411 Transportation Center	Hazardous Waste Generator, LUST Facility	7,8,9	10
109	Issaquah School District Clark Elementary	Hazardous Waste Generator, Underground Storage Tank	7,8,9	10
110	Issaquah Sportsmen Club 2	State Cleanup Site	7,8,9	10
111	Julius Boehm Pool	Source Control Inspection	7,8,9	10
112	Las Margaritas	Source Control Inspection	7,8,9	10
113	MOBIL Station 10 D6R	Independent Remedial Action Program, LUST Facility	7,8,9	10
114	NAPA Auto Parts Issaquah	Source Control Inspection	7,8,9	10
115	Shell 117	Source Control Inspection	7,8,9	10
116	Shell Station 120677	Hazardous Waste Generator, LUST facility, Hazardous Waste Management Activity, Hazardous Waste Generator	7,8,9	10
117	Stephanie A Kavanaugh DMD MSD	Source Control Inspection	7,8,9	10
118	Toyo Matsumoto DDS	Source Control Inspection	7,8,9	10
119	WA DFW Issaquah Hatchery	Emergency/Haz Chem Rpt TIER2, Non-Enforcement Final, 401CZM Project Site	7,8,9	10

Notes:

1. Sources of Data:
   Washington State Department of Ecology F/SID Database (September 2017)
   Washington State Department of Ecology UIC Database (September 2017)
   District windshield survey (2017)
2. See Figures 5-1 and 5-2 for site locations.

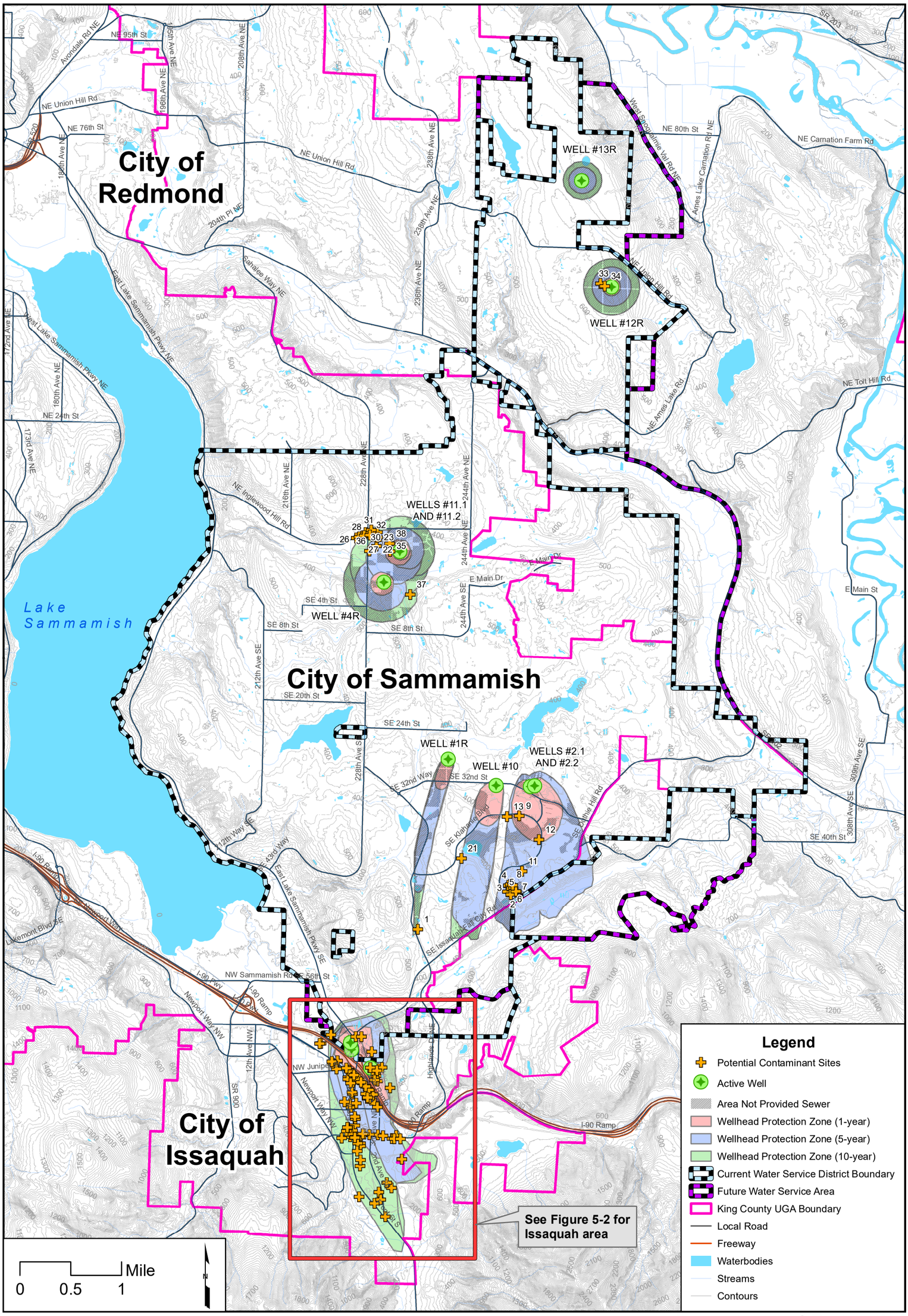

CHS ENGINEERS

Sammamish Plateau Water

Inventory of Potential Contaminant Sources

FIGURE 5-1

Water Comprehensive Plan

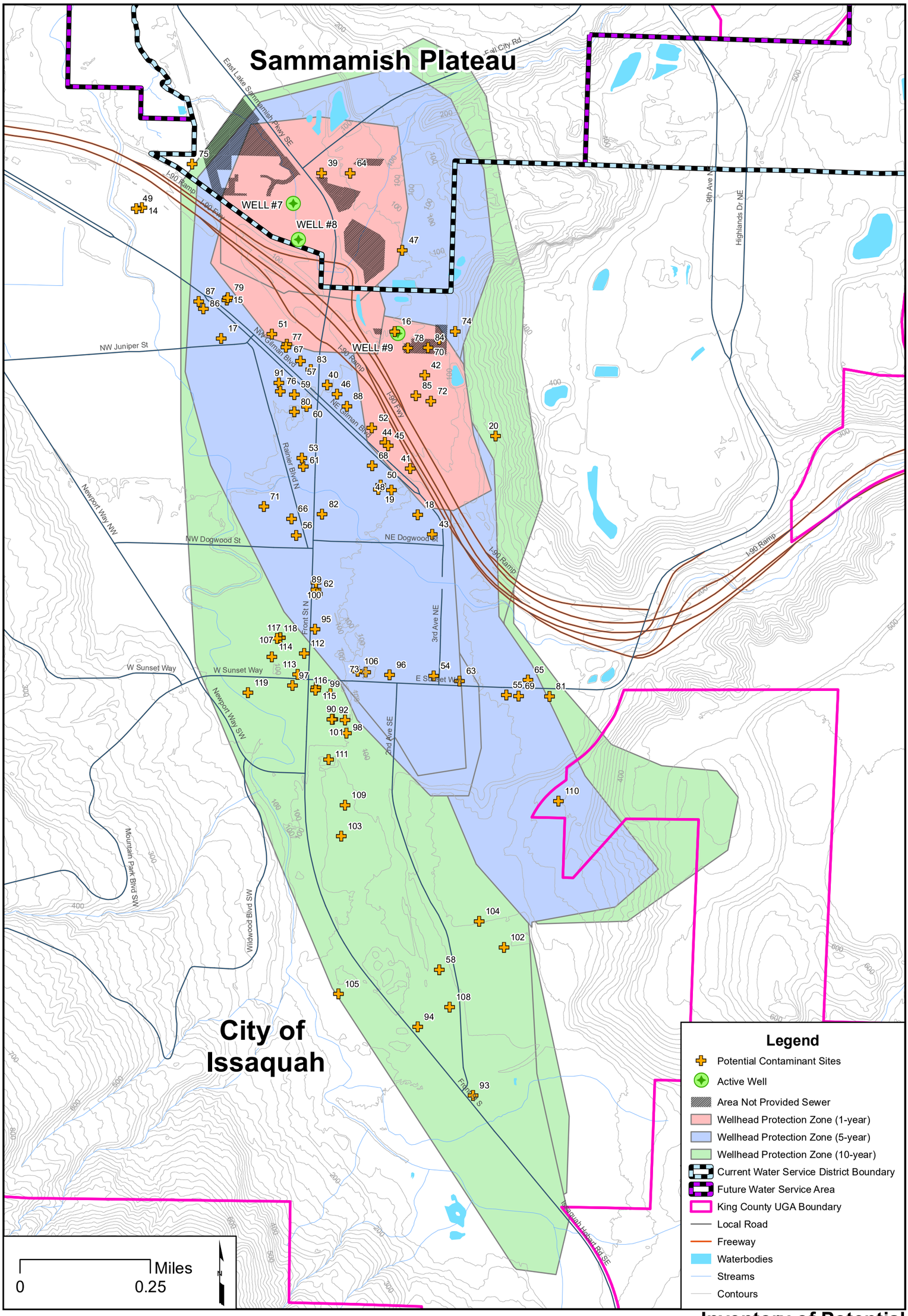

CHS ENGINEERS

Sammamish Plateau Water

Inventory of Potential Contaminant Sources (Wells 7, 8, 9)

FIGURE 5-2

Water Comprehensive Plan

5.4.3.1 Lower Reid Infiltration Gallery

A notable potential contaminant site that was listed and described in the previous water system plan was the Issaquah Highlands Lower Reid Infiltration Gallery (LRIG). Details of this stormwater infiltration facility can be found in the previous water system plan.

Since the last water system plan document was published, the City of Issaquah performed two years of monitoring from 2010 to 2011 under an agreed order with the Department of Ecology to evaluate post-treatment stormwater quality for planned infiltration. During this monitoring phase, stormwater was routed through the above ground treatment facilities then diverted to North Fork Issaquah Creek. The results of this monitoring showed persistent elevated levels of fecal coliform bacteria that was passing through, or being introduced within the existing above ground treatment systems, specifically a settling pond and a bioswale. From 2012 to 2013, the State Department of Ecology drafted a State Waste Discharge Permit that would allow for injection to resume at the LRIG with continued monitoring and lower injection rates. The risks associated with inadequate above ground treatment and high bacteria levels continued to concern the District and the District presented funding for several options to install a more robust above ground treatment system, or abandon the system completely. At the end of 2014, the City of Issaquah accepted funding from the District to completely abandon the LRIG and develop stormwater treatment/conveyance to convey the 2 cubic feet per second injection rate designated in the draft state waste discharge permit to other locations within the Issaquah Highlands, outside of the District's WHPA.

5.4.3.2 Per- and Polyfluorinated Compound (PFAS) Plume

The District is actively engaged in the monitoring and modeling of groundwater per- and polyfluorinated compounds (PFAS) contamination in the VAS. While PFASs are not regulated drinking water contaminants, the United States Environmental Protection Agency (USEPA) established health advisory levels for two PFASs, perfluorooctane sulfonate (PFOS) and perfluorooctanoic acid (PFOA), on May 25, 2016. The cumulative PFOA + PFOS health advisory level was established at 0.07 micrograms per liter (µg/L), equivalent to 0.07 parts per billion (ppb) and 70 parts per trillion (ppt).

Between 2013 and 2015, the District and the neighboring City of Issaquah both took part in monitoring for PFASs as part of the third Unregulated Contaminants Monitoring Rule (UCMR3). During the UCMR3 monitoring, the City of Issaquah had detections of PFASs elevated above the health advisory level in two groundwater supply wells (Wells 4 and 5) that are 1,600 feet west-northwest of District wells 7 and 8. Monitoring in the District's system as part of the USEPA's UCMR3 found detections of PFOS and one additional PFAS below the survey's minimum reporting level (MRL) of 0.04 µg/L; consequently, PFAS concentrations for these sample dates were reported as non-detect. Recent ongoing sampling utilizing a laboratory with a lower reporting limit has found detectable PFAS concentrations at three of the District's groundwater wells. While in all cases the PFOA + PFOS concentrations have been well below the health advisory level, there is uncertainty for future PFAS levels in the District VAS production wells.

During the second and third quarters of 2016, the District began a PFAS groundwater sampling program at District production wells to monitor and take immediate action if PFAS concentrations in any of the production wells started to increase to health advisory levels. At the same time, the District engaged a consultant (Corona Environmental Consulting, LLC (Corona) to develop a monitoring and response plan for PFASs in the District's production wells. This plan, prepared and released in March 2017, provides triggers and actions levels for responding to elevated PFAS levels in the District's production wells and evaluates non-treatment and treatment options to ensure that PFAS concentrations in water supplied to the District's customers does not exceed the health advisory level (Corona, 2017). Additionally, the District engaged a second consultant, CDM Smith, to perform groundwater modeling to better understand the migration of the PFAS plume as delineated by the City of Issaquah from their groundwater sampling/monitoring well installation in 2016, including any directional effects caused by pumping. The model construction, simulation runs and subsequent recommendations as a result of the modeling is presented in an April 2017 technical memorandum titled *Groundwater Model Development and Applications for PFC Risk Mitigation* (CDM Smith, 2017)

Results of the District monitoring and response plan and groundwater modeling presented several action items (both short-term and long-term) that the District is currently implementing. These include:

- Continued routine sampling and reporting of PFASs in District VAS Production wells and system water that is representative of a blend of VAS and Regional supply source waters.

- Continued coordination of well operation data sharing between the District, City of Issaquah, and Darigold (a local industry with a large pumping well found to have influence on the identified plume pathway) and Eastside Fire and Rescue (owner of the facility identified by the City of Issaquah to be the primary source of the PFAS plume).

- Long-Term seasonal monitoring of two monitoring wells installed by the City of Issaquah. One monitoring well, MW06, has recorded the highest concentration of PFASs and the other, MW04, is located near the northeastern edge of the identified and mapped PFAS plume. The monitoring at these two wells will provide early detection of any increase in PFAS concentrations near the identified source area and detect plume migration to the northeast that could cause an increase in PFAS concentrations at District Wells 7 and 8.

- Submitting a water right change application to the State Department of Ecology to allow some use of Well 9 throughout the year to minimize production from Well 7 and 8. This use will be predicated by demand due to the fact that the instantaneous pumping capacity is limited by its current well pump and during peak summer demand it is necessary to pump Well 8, which has a pump with greater capacity to

keep up with the seasonal peak demand.

- Long-Term surveillance and evaluation of the identified plume as well as ongoing discussions with State, City of Issaquah, and County leaders in the development of a PFAS guidance document to help identify a proper monitoring and enforcement plan to manage groundwater affected by the PFAS plume.

An additional study has been initiated in 2018 by the Washington State Department of Ecology, Eastside Fire and Rescue and the City of Issaquah, to further evaluate the nature and extent of PFAS in the Lower Issaquah Valley. Investigation is being performed at three locations, 175 Newport Way (Eastside Fire and Rescue Headquarters), Issaquah Elementary School and the "Eastern Areas". These areas identified for study are shown on Figure 5-3. The study is to establish whether a direct contact exposure to PFAS exists at all sites, establish whether leaching pathways from soil to groundwater exist at all sites, and to confirm the presence and extent of PFAS contamination at the 175 Newport Way Site. An initial report is anticipated in the first quarter of 2019.

5.4.4 Additional Potential Sources of Contamination

In addition to the point sources identified in 5.4.3, there are other non-point sources within the WHPAs can also be a potential source of contamination. Such sources include roadway runoff and septic system discharges.

Figures 5-1 and 5-2 depict the roadways and highways that are within or near the District's WHPAs. Potential contamination from roadways includes pollutants transported by runoff to areas where surface water infiltrates into groundwater, as well as impacts from spills that occur due to accidents or improper material transport.

The figures also identify those portions of the WHPAs that are currently not provided sewer service, and which therefore contain active septic systems. In Cascade View, sewer service is not provided in any of the WHPAs. This, coupled with the few identified point sources of potential contamination and the more rural nature of the area, results in septic system discharges posing the greatest risk of potential contamination to area groundwater.

Sewer service is provided to approximately half of the extent of the WHPAs for the Sammamish Plateau wells, and nearly all of the WHPA for the Lower Issaquah Valley wells.

5.5 Notification

It is required that all owners/operators of potential sources of contamination within the WHPA boundaries, as well as regulating agencies and local governments, be notified of the WHPA boundaries, inventory findings, and contingency plan conclusions. The District has completed the notification based on the 2017 Inventory of Potential Contaminant Sources. Applicable emergency responders have also been notified so

that they can incorporate the WHPA into their spill response planning activities. Table 5-3 lists the businesses and agencies that have been notified.

Figure 5-3
LOWER ISSAQUAH VALLEY PFAS CHARACTERIZATION EXPLORATION AREAS[1]

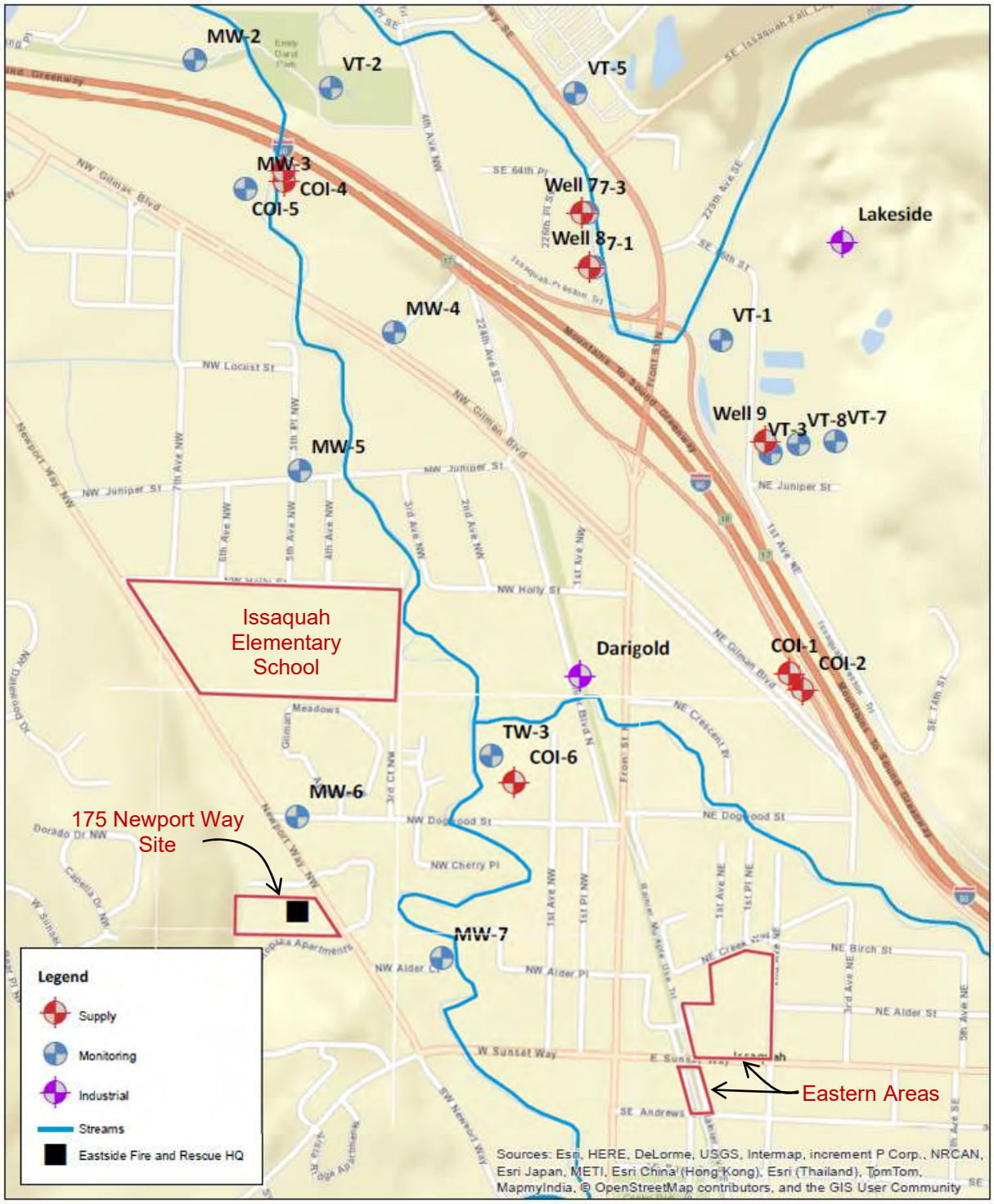

[1]Exploration areas as included in a study by Farallon for Department of Ecology, Eastside Fire and Rescue and City of Issaquah, as referenced above.

Table 5-3
Potential Source Contamination Notifications

Agencies and First Responders	
WA DFW Issaquah Hatchery	City of Issaquah
King County DOT DPW	City of Sammamish
Redmond Fire Station	Issaquah Public Works
Issaquah School District 411	Eastside Fire & Rescue
Eastside Catholic School	Lake Washington School District
	Sammamish Plateau Water District
Businesses	
Virginia Mason Medical Center	Domino's Pizza
Grange Supply Co	Shell Station 120677
Shell 117	Issaquah City Food & Clothing
Eastside Pediatric Dental Group	Napa Auto Parts Issaquah
Douglas L Perkins DDS	Arnold R Sims DDS
Issaquah Feed & Service	Chevron 95399
Boehm's Candies Inc	Mobile Station 10 D6R
Issaquah Brewhouse	Issaquah Cleaners
Oil Can Henry's Issaquah	Barry Feder DDS PS
Flintofts Funeral Home	Casey's Shell
Pacific West Medical Supplies	Las Margaritas
Big O Tires	Darigold Issaquah
Westfarm Foods Issaquah	76 Station
Lakeside Industries/Cadman Sand & Gravel	Issaquah Veterinary Hospital
Bus Garage	Shell 119
Cat Clinic of Issaquah	Toyo Matsumoto DDS
Stephanie A Kavanaugh DMD MSD	Cougar Mountain Veterinary Hospital
Ben Franklin Issaquah	Gramore Development
Marks Japanese & European Auto	Issaquah Furniture Inc
XXX Root Beer	Black Nugget Mine SW Creek
Pogacha Restaurant	Evergreen Autobody
Issaquah Sportsman Club 2	Dirks Fine Dry Cleaning
The Boarding House	Glen Yorita DDS
East Gilman Professional Center	O'Brien Professional Building
Learning Rx	I-90 Motorsports Service Department
Integrity Automotive	Benjamin Moore Paint Store Issaquah
Klahanie Chevron	Klahanie Center Veterinary Hospital
Klahanie Cleaners	Swedish Primary Care
Klahanie Family Dentistry	Issaquah Nails

Table 5-3 (cont.)
Potential Source Contamination Notifications

Agencies and First Responders	
Hawkins Orthodontics	Albert's Jewelers
Klahanie Info Center/Lakeside Pool	Tanglewood at Klahanie
Minuteman Press	Shirley Place/Issaquah Cannabis Co
Site One Landscape Supply	I-90 Marine Center
Abra Auto Body & Glass	Dynafios
Angolkar 4 Smiles Orthodontics	Healy Sunset Building
Julius Boehm Pool	Medical Center of Issaquah
Issaquah Medical Building	Arco
Issaquah Professional Center	Perry Stained Glass Studio
Issaquah Nursing & Rehabilitation	Ohana Sushi Bar & Grill
Tikka Masala	Annotto Bay Veterinary Clinic
Plateau Motors	Rhonda Newton DDS
Bella Cleaners	Plateau Shell
Ogata Professional Building	Oil Can Henry's Sammamish
Sammamish Highlands Veterinary Hospital	Sammamish Highlands 76 Station
Red Carpet Dry Cleaners	Benjamin Moore Paint Store Sammamish
John M Rossi DDS	Safeway #555

5.6 Contingency Plan

The District has developed a contingency plan that prioritizes the measures to be taken if a well or wellfield source is disrupted. The contingency plan is divided into short-term and long-term components listed below.

Short-Term Components. If there is a short-term water disruption to the water supply, the District will restrict water use to 80 percent of the average wintertime water use and attempt to locate alternative water sources to meet this reduced demand:

1. Should a well fail to meet water quality or quantity requirements and the problem appears to be more than temporary, then the District's first line of action will be to apply to Ecology for an emergency transfer of water rights to a well that is not impacted, while the source of the problem is investigated.
2. The District's Regional Supply Connections would be the primary means by which water lost due to a well supply disruption would be replaced.
3. Existing interties will also be utilized as available to meet short-term reduced water demands upon the concurrence of the supply purveyor. This measure would potentially work with Union Hill Water Association in the Cascade View Zone, and with Northeast Sammamish Sewer and Water District and City of Issaquah in the

Plateau Zone. The amount of water available to be conveyed through these existing interties is limited; their use would depend on the volume of water required to meet demands.

4. The District will take measures to develop additional interties to be used as contingency measures. Potential future interties that would meet these criteria could be with the City of Redmond, via the Redmond Ridge development for the Cascade View Zone, and the City of Issaquah via the Issaquah Highlands development, for the Plateau Zone.

Long-Term Components. If there is a long-term water disruption to the District's groundwater supply, the District will consider the potential for redeveloping the disrupted groundwater source, permanent transfer of the water rights from the disrupted source to an unaffected groundwater source, or more fully utilize the Regional Supply Connections.

5.7 Spill Response

The District has completed a spill response plan that specifies the emergency responders to be contacted if a contaminated spill occurs within the identified WHPAs. Table 5-4 lists each of the responders that could potentially be involved in a spill event. The complete Spill Response Plan is included in Appendix Q.

Table 5-4
Emergency Response Plan Emergency Responders

Agency	Telephone Number
Eastside Fire and Rescue	425-313-3700
City of Issaquah Police	425-837-3200
City of Sammamish Police	425-295-0770
Fall City Fire Department (KCFD 27)	425-222-5841
Redmond Fire Department (KCFD 34)	425-556-2200
Duval Fire Department (KCFD 45)	425-788-1625
Eastside Hazardous Materials Team (Bellevue 911 Dispatch	425-577-5656
King County Sheriff Office	206-296-3311
Washington State Highway Patrol	425-401-7788
Washington Military Department Emergency Management Division	800-258-5990
King County Emergency Management Division	206-296-3830
Department of Ecology Spill Response NW Section	425-649-7000
State Department of Health - NW Regional Office	253-395-6750 877-481-4901 after hours

5.8 Regional Coordination

The District has been working with adjacent purveyors and entities to coordinate aquifer management activities. The District shares aquifers with the City of Issaquah, Northeast Sammamish Sewer and Water District, and Union Hill Water Association. In addition, the Cities of Issaquah and Sammamish, and King County have land use jurisdiction within the District's aquifer recharge areas.

The District played an active role in the development of the *Issaquah Creek Valley Groundwater Management Plan* that was finalized in March 1999. The purpose of the Issaquah Creek Valley groundwater management committee is to define and implement the aquifer protection strategies presented in the Groundwater Management Plan.

Because Wells 7, 8, and 9 are located in the same aquifer as the City of Issaquah's wells, the District has met periodically with City of Issaquah representatives to discuss issues associated with co-management of the aquifer. The City of Issaquah requires businesses within the Issaquah Class 1 and Class 2 Critical Aquifer Recharge Areas to submit hazardous materials inventory (HMI) forms to the City. The City actively pursues source control inspections of these businesses, and further requires Hazardous Materials Management Plans (HMMP) for those businesses with reported quantities of hazardous materials equal to or greater than 20 gallons or 200 pounds that may present a potential threat to the aquifer.

The District meets regularly with the Northeast Sammamish Sewer and Water District through a joint facilities committee because the two utilities share facilities (reservoir) and the aquifer. The District's Cascade View Zone is located adjacent to Union Hill Water Association, and it is believed that the two utilities pump from the same aquifer system. The District communicates regularly with Union Hill on issues related to provision of water service in this area.

The District's primary regional strategy is to work with the entities that have land use control within its WHPAs to develop and maintain protection measures. Both the City of Sammamish and City of Issaquah have included Critical Aquifer Recharge Areas (CARA) in their Critical Area Ordinances, which include the District's WHPAs.

This page intentionally left blank.

CHAPTER SIX – OPERATION AND MAINTENANCE PROGRAM

This page intentionally left blank.

6. Operation and Maintenance Program

Table of Contents

6.1 Water System Management and Personnel……6-1
6.2 Certification, Training, and Membership in Professional Organizations……..6-6
6.2.1 Training and Professional Organization Membership…… 6-7
6.3 System Operation and Control……...6-8
6.3.1 Identification of Major System Components……..6-8
6.3.1.1 Plateau Zone Components…… 6-24
6.3.1.2 Cascade View Zone Components…… 6-31
6.3.2 Routine System Operation and Preventative Maintenance…… 6-33
6.3.3 Chemicals, Equipment, Supplies, and Maintenance Contractors…...6-34
6.4 Comprehensive Monitoring (Regulatory Compliance) Plan..6-34
6.4.1 Introduction and Approach…… 6-34
6.4.2 System Overview…… 6-35
6.4.3 Drinking Water Regulatory Framework……6-35
6.4.4 Effective Drinking Water Regulations…….. 6-36
6.4.5 Source and Treatment Regulations…… 6-38
6.4.5.1 Surface Water Treatment Rule……..6-38
6.4.5.2 Groundwater Rule…… 6-39
6.4.5.3 Phase I, II, and V Rules (Inorganic & Organic Chemicals)… 6-42
6.4.5.4 Arsenic Rule……..…… 6-49
6.4.5.5 Radionuclides Rule…… 6-50
6.4.5.6 Unregulated Contaminant Monitoring Rule…… 6-51
6.4.6 Distribution System Regulations……6-53
6.4.6.1 Total Coliform Rule…….. 6-53
6.4.6.2 Stage 1 Disinfectant/Disinfection By-Products Rule…….. 6-54
6.4.6.3 Stage 2 Disinfection By-Products Rule…… 6-55
6.4.6.4 Lead and Copper Rule…… 6-57
6.4.7 Other Regulations…… 6-60
6.4.7.1 Consumer Confidence Reports and Public Notification Rule……6-60
6.4.7.2 Operator Certification…….. 6-61
6.4.8 Recently Promulgated and Anticipated Drinking Water Regulations.. 6-61
6.4.8.1 Unregulated Contaminant Monitoring Rule 4…….. 6-62
6.4.8.2 Lead and Copper Rule Long Term Revisions……6-62
6.4.8.3 Perchlorate …….. 6-65
6.4.9 Certified Laboratories Used for Sample Analyses……..6-65
6.4.10 Response to Customer Inquiries and Complaints…… 6-66
6.4.11 Summary of Regulatory Status……6-66
6.4.11.1 Monitoring Plans…… 6-68
6.4.11.2 Bacteriological Monitoring Plan……6-69

6.4.11.3 Inorganic Chemical, Physical Contaminant, Organic Chemical, Radionuclide Monitoring Plans…….…….. 6-82
6.4.11.4 Lead and Copper Monitoring Plan.....6-82
6.5 Emergency Response Program…….6-84
6.5.1 Emergency Response…….……...6-84
6.5.2 Emergency Response Plan …….……6-85
6.5.3 Emergency Response Plan, Volume 1.....6-86
6.5.3.1 Chapter 1: Introduction……..6-86
6.5.3.2 Chapter 2: Emergency Preparedness: District Planning.….6-86
6.5.3.3 Chapter 3: Emergency Preparedness: Implementing District Planning……. 6-87
6.5.3.4 Chapter 4: Emergency Preparedness: Response Organization……6-87
6.5.3.5 Chapter 5: Emergency Preparedness: Response Process..6-89
6.5.4 Emergency Response Plan, Volume 2: Response……6-90
6.5.5 Emergency Response Plan, Volume 3: Resource Manual ……..… 6-90
Chapter 1 – COMMUNICATIONS AND RADIO
Chapter 2 – FACILITY INFORMATION
Chapter 3 – GENERATORS
Chapter 4 – AGENCIES, CONTRACTORS, SUPPLIERS AND FUEL SUPPLIERS
Chapter 5 – MEDICAL/HOSPITAL
Chapter 6 – MUTUAL AID
6.5.6 Emergency Response Plan, Volume 4: Vulnerability Assessment.…6-91
6.5.7 Emergency Response Plan, Volume 5: District Water Facilities…….6-92
6.5.8 Emergency Response Plan, Volume 6: District Sewer Facilities…… 6-92
6.5.9 Seismic Resiliency……..6-92
6.5.10 Coliform Monitoring Plan & Triggered Ground Water Monitoring Plan……6-93
6.6 Safety Procedures……..…….…6-93
6.7 Cross-Connection Control Program…….....6-96
6.8 Customer Complaint & Inquiry Response….……..……....6-100
6.9 Recordkeeping……..….....6-103
6.10 Reporting……..…6-105
6.11 Operation and Maintenance Improvements …..…….……6-106
6.12 Water Shortage Response Plan……..……6-107

Tables

6-1 District Management……6-2
6-2 Current Water System Operations Full-Time Equivalents……..6-5
6-3 Combined Water Operation Routine and Preventative Maintenance Staffing Level Required for Water Operators……6-6
6-4 Current Personnel - Water System Related Certifications……..6-7

6-5 Major System Components – Supply Sources……6-8
6-6 Major System Components – Treatment Facilities……....6-9
6-7 Major System Components – Storage Facilities.....6-11
6-8 Major System Components – Water Distribution System……6-12
6-9 Major System Components – Booster Pump Stations……..... 6-14
6-10 Major System Components – Pressure Reducing Stations……..……..... 6-15
6-11 Major System Components – Control Valves ...……..……6-18
6-12 Major System Components - Additional Zone Valves ……..……6-20
6-13 Major System Components – Interties…..……..……..……. 6-23
6-14 Applicable Safe Drinking Water Act Regulations……..…….. 6-37
6-15 Inorganic Chemicals – Regulatory Levels and District Monitoring Results (2009 to 2016)…….…..6-43
6-16 Synthetic Organic Chemicals - Regulatory Levels and District Monitoring Results (2009 to 2016)……. 6-44
6-17 Volatile Organic Chemicals – Regulatory Levels and District Monitoring Results (2009 to 2016)…….. 6-47
6-18 Arsenic Rule – Regulatory Levels and District Monitoring Results (2009 to 2016)…… 6-50
6-19 Stage 1 D/DBP Rule – Regulatory Levels and District Monitoring Results (2009 to 2012)…….. 6-55
6-20 Stage 2 D/DBP Rule – Regulatory Levels and District Monitoring Results (2013 to 2017)…….. 6-57
6-21 Lead and Copper Rule Revisions, 2007……. 6-58
6-22 Lead and Copper – Regulatory Levels and District Monitoring Results (2010, 2013 and 2016)……....6-60
6-23 Recently Promulgated and Anticipated Regulations Under the Safe Drinking Water Act……6-62
6-24 Summary of Applicable Regulations and Compliance Status…… 6-66
6-25 Monthly Bacteriological Monitoring Locations…… 6-69
6-26 Inorganic Chemical, Physical Contaminant, Organic Chemical, Radionuclide Monitoring Locations…….. 6-82
6-27 Lead and Copper Monitoring Locations…….. 6-83
6-28 Evaluation of Emergencies……6-86
6-29 Phases of Response…….. 6-87
6-30 Workplace Hazards…… 6-95
6-31 Estimated Staff Time Required to Implement Cross-connection Control Program (1 FTE = 1,788 hours)…… 6-99
6-32 Customer Complaints and Inquiries……6-101
6-33 Record Keeping……6-104
6-34 Operation and Maintenance for System Growth…….. 6-106

Figures

6-1 2018 District Organizational Chart…….. 6-3
6-2 Sampling Stations by Week …….. 6-81
6-3 Sammamish Plateau Water Incident Command System Organization……6-89

This page intentionally left blank.

6. Operation and Maintenance Program

This chapter is intended to outline the daily functions involved in keeping the water system running smoothly. The District's existing program for proper and efficient operation and maintenance of the water system is documented in the following sections. Additional detail is presented in Appendix R, as referenced herein.

6.1 Water System Management and Personnel

The District is organized into five departments, each managed by a department manager:

1. Administration, General Manger
2. Information Services, Information Services Manager
3. Customer Service and Finance, Finance Manager
4. Engineering, Engineering Manager
5. Operations, Operations Manager
   The Operations department is further segregated into three sections:
   a. Water Operations, Team Superintendent
   b. Sewer Operations, Team Superintendent
   c. Building and Grounds Maintenance, Team Superintendent

The department managers report to the General Manager, who in turn reports to the five-member Board of Commissioners. Table 6-1 lists the responsibilities of each management position. As of early 2018, the District employed 56.75 full-time equivalent staff members. Figure 6-1 is the District's current staff organization chart.

The Operations Department is organized into three divisions: the Water Team, the Sewer Team and the Building and Grounds Team. The Water Team is the focus of this section because their activities relate to water operations. The Building and Grounds Team also plays a significant role with respect to the SCADA facilities.

The Water Superintendent manages the Water Team. In addition to the Superintendent, the water team includes two Water Leads, three Water Technicians, and six Operators-in-Training (OIT). The Water Team is responsible for water system operations, water treatment, water quality sampling and monitoring, storage tank maintenance, well maintenance, booster pump maintenance, system pressure reducing valves maintenance, hydrant and valve maintenance, water main break repairs, water main replacement projects that are limited in scope, water service repairs, and water service and meter installations not associated with new main installation in developments. During the summer months, two to four part-time field operations employees are hired to assist with landscape maintenance (under the Building and Grounds Team) and painting of facilities throughout the District. Often, two of these summer hires are dedicated to the Water Team and/or customer service, but additional support may be obtained from the other summer personnel.

Table 6-1
District Management

Position	Responsibilities
General Manager	Utility management, emergency response, public/press contact, planning, information technology, human resources
Finance Manager	Billing, customer meters, accounts payable, budget formulation, response to complaints, cross-connection control
Information Services Manager	Information technology (IT) and Geographical Information Services (GIS)
Engineering Manager	Implementation of the capital plan, design review and inspection of facility construction, and field engineering in consultation with operations team to resolve operational conditions
Operations Manager	Overall management and planning for field operations of the water and sewer systems
Water Superintendent	Normal day to day operations, preventive maintenance, water quality monitoring, meter installations, water system repairs
Sewer Superintendent	Normal day to day operations, preventive maintenance, odor control, infiltration and inflow monitoring, sewer system repairs
Building & Grounds Superintendent	Management of District buildings, grounds, and easements, SCADA services

Figure 6-1
2018 District Organization Chart

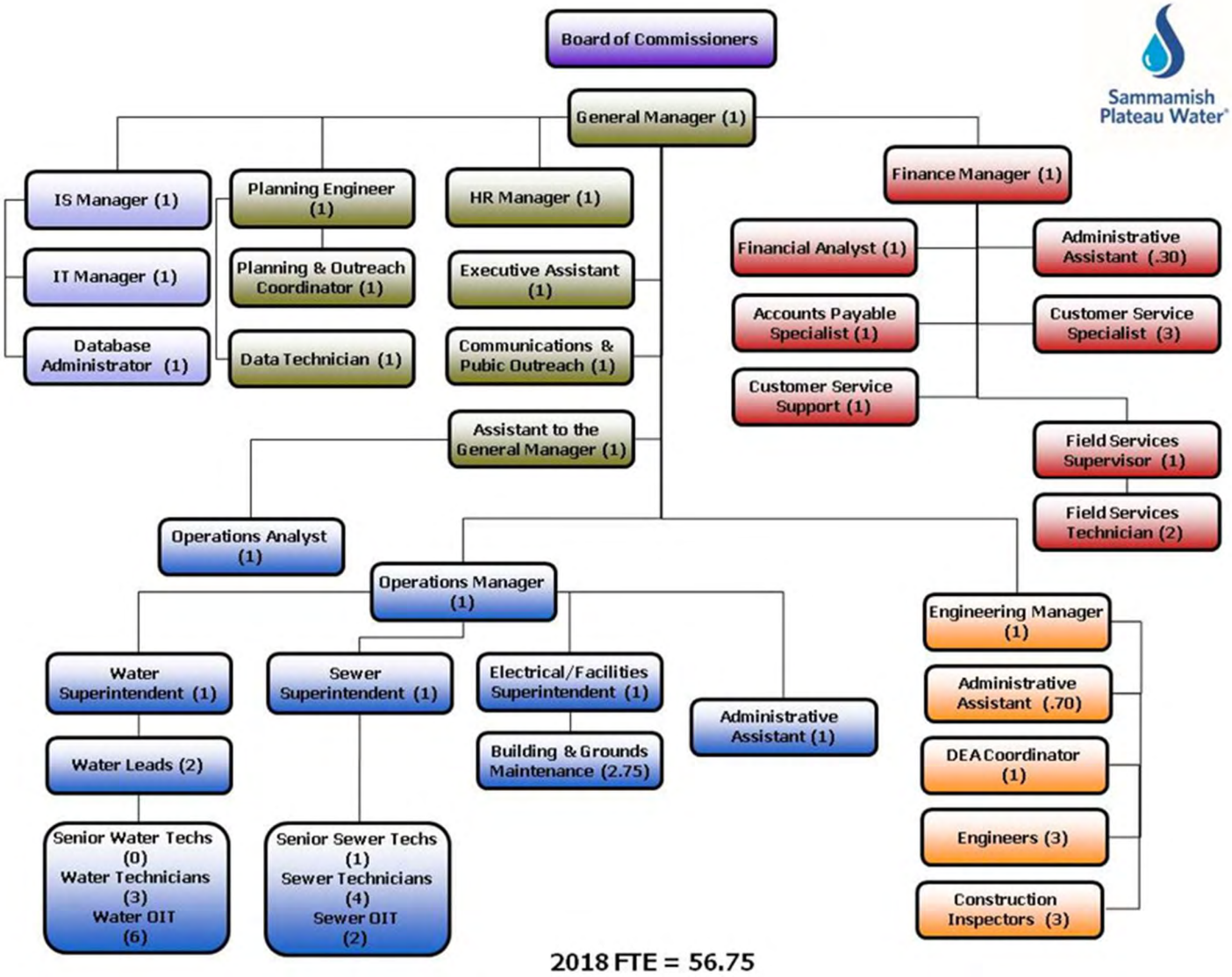

The foregoing discussion indicates that the field teams include both field technicians and OITs. Typically, a new hire begins their role at the District as an OIT and will remain in that role until they have completed the requirements in a training matrix that may take approximately four years, assuming little or no previous relevant experience. The OIT is assigned to a “home” team: water or sewer. During the course of their training time, each year they may spend some time cross-training with the other team. When they have demonstrated they have the experience and skill based on their successfully completing training they can become a full field technician. With even more experience the Technician may be promoted to the position of Senior Technician.

The Customer Service Specialists, Field Services Superintendent and Field Services Technicians work in the Finance Department, but provide services associated with the water operations. The Field Service area handles all water meter drops for single-family and non-single-family developments where meter setters were previously installed. During the summer months, two part-time customer service employees are hired to assist with meter maintenance throughout the District.

The Communications and Public Outreach and Planning and Outreach Coordinator positions, both in the Administration Department, lead the District’s Conservation Program and provide public information services throughout the District, including preparing the annual Water Quality reports.

Table 6-2 summarizes the number of positions and the number of full-time equivalents (FTEs) currently used for water-related work. Based on this information, there are approximately 20.5 FTEs performing work related to the water system. Of these, 11.5 are Water Operators. Table 6-3 describes the total Water Operators staffing requirement for the water system and contract work for Cascade Water Alliance (11.6 FTEs).

Non-public outreach administrative, engineering and non-customer service finance department personnel that support the water system operations are not included in Table 6-2. Note that Table 6-3 reflects the staffing requirements for routine and preventative maintenance work. It does not reflect all time required for reactive situations, such as main breaks.

Table 6-2
Current Water System Operations Full-Time Equivalents

Position	Water FTE[1]		
Operations Manager	0.5	O	1 (50% Water, 50% Sewer)
Administrative Assistant (Operations)	0.5	O	1 (50% Water, 50% Sewer)
Electrical/Facilities Superintendent	0.54	O	1 (33% Water, 33% Sewer, 33% General Admin split 61%W/39%S)
Operations Analyst	0.5	O	1 (50% Water, 50% Sewer)
Water Superintendent	1.0	O	1 (100% Water)
Water Leads	2.0	O	2 (100% Water)
Sr. Technician	0.0	O	0 (100% Water)
Operation Technicians	3.0	O	3 (100% Water)
Operators in Training	6.0	O	6 (100% Water)
Field Services Supervisor	0.9	CSR	1 (90% Water, 10% Sewer)
Field Services Technician	1.80	CSR	2 (90% Water, 10% Sewer)
Customer Service Specialist	1.83	CSR	3 (61% Water, 39% Sewer)
Communications & Public Outreach	0.7	AD	1 (70% Water, 30% Sewer)
Planning & Outreach Coordinator	0.26	AD	0.5 (52% Water, 48% Sewer)
Summer Part Time Equivalents	0.5 0.5	O CSR	2 Water + 2 Field Service positions 3 mo ÷ 12 mo/year (100% Water)
Total	**20.53**		**FTEs**
Water Operator Sub-total	**11.5**		**FTEs** (includes Summer FTEs)

1 O=Operations, CSR = Finance & Customer Service, AD = Administration

Table 6-3
Combined Water Operation Routine and Preventative Maintenance Staffing Level Required for Water Operators

Operations Functions[2]	Annual Staff Hours	Needed FTEs[1]
Water Administration	5,835	3.26
Wells and Production	1,373	0.77
Water Treatment	2,746	1.54
Water Storage	650	0.36
Booster Stations	686	0.38
Water Mains & Appurtenances	7,910	4.42
Water Meters	1,372	0.77
Total District Water Operators Work[3]	**20,572**	**11.51**
Contract Work for Cascade Water Alliance	150	0.08
Total – District + Contract Work[3]	**20,722**	**11.59**
Actual FTEs Employed (see Table 6-2)		11.5

1 - 1 FTE = 1,788 hours, adjusted from 2080 for assumed leave use
2 - See Appendix R for details
3 – Does not include reactive work, such as main breaks

6.2 Certification, Training, and Membership in Professional Organizations

Table 6-4 presents a complete list of water system related certifications and the number of employees that hold each of the certifications.

Table 6-4
Current Personnel - Water System Related Certifications

Certification	Employees with Certification or Training
Asbestos Supervisor	2
Asbestos Cement Pipe Work	17
Backflow Assembly Tester	1
Commercial Driver's License - General	16
Commercial Driver's License - HazMat Endorsement	0
Cross Connection Control Specialist 1	13
Electrician, Journeyman Certificate	1
Traffic Control Flagger	22
Water Distribution Manager 1	11
Water Distribution Manager 2	2
Water Distribution Manager 3	0
Water Distribution Manager 4	3
Water Distribution Specialist	3
Water Treatment Plant Operator - OIT	0
Water Treatment Plant Operator 1	3
Water Treatment Plant Operator 2	2
Water Treatment Plant Operator 3	2

6.2.1 Training and Professional Organization Membership

Annually, the District budgets for personnel training, certification, and membership in professional organizations such as the American Water Works Association (AWWA) and Washington Association of Sewer and Water Districts (WASWD). The amount budgeted is based on past needs and currently is approximately $3,000 for AWWA, including both national and regional level dues, and $19,500 for WASWD, with approximately 60% or $11,700 of the WASWD dues associated with water customers.

Membership in AWWA helps personnel keep up with the state-of-the-art in management and operations of water utilities and WASWD provides opportunities for participation in training and development programs with personnel from other Districts throughout the state.

6.3 System Operation and Control

6.3.1 Identification of Major System Components

The District is divided into two separate and hydraulically independent areas: the Plateau Zone and the Cascade View Zone. The operational zone of each major system component is noted in Tables 6-5 through 6-13. Descriptions and locations of each component are presented in the following subsections. Locations of key components are provided in Chapter 1 (System Description) figures.

Table 6-5
Major System Components - Supply Sources

Wells		
Connection	**Zone Served**	**Current Production Rate (gpm)**
Well 1R	Plateau S – 650 zone	500
Well 2.1	Plateau S – 650 zone	300
Well 2.2	Plateau S – 650 zone	500
Well 10	Plateau S – 650 zone	500
Well 4R	Plateau S – 650 zone	1,580
	Plateau N - 550 zone	1,655
	Plateau N - 700 zone	1,550
Well 11.1	Plateau S – 650 zone	389
	Plateau N - 550 zone	
	Plateau N - 700 zone	
Well 11.2	Plateau S – 650 zone	1,200
	Plateau N - 550 zone	1,370
	Plateau N - 700 zone	1,250
Combined Well 4R & Well 11.2	Plateau S – 650 zone	2,780
	Plateau N - 550 zone	2,650
	Plateau N - 700 zone	2,800
Well 7	Plateau S – 297 zone	2,000
Well 8	Plateau S – 297 zone	3,200
Well 9	Plateau S – 297 zone	2,200
Well 12R	Cascade View – 730 zone	200
Well 13R	Cascade View – 730 zone	260

Table 6-5 (cont.)
Major System Components - Supply Sources

Regional Supply Connection			
Regional Supply Connection	**Zone Served**	**Production Rate (gpm)**	**Operational Status**
Cascade Water Alliance - South Regional Connection	Plateau S – 297 zone	7,000 gpm (24" diameter at 5 fps) (DOH Report = 10MGD at 100psi)	Remote Operation – metered
Cascade Water Alliance – North Regional Connection	Cascade View – 730 zone	400 gpm (DOH report) 780 gpm (8" diameter at 5 fps)	Manual Operation – metered Wheeled through City of Redmond system in Redmond Ridge

Table 6-6
Major System Components - Treatment Facilities

Treatment Facility	Supply Source	Treatment Provided	Treatment Type
Well 1	Plateau S - Well 1R	Sodium hydroxide	Delivered at 50%, diluted to 25% in day tank
		Chlorination	On-site Generation at 0.8 – 1%
		Fluoridation	Sodium Fluoride to Saturator, reduced to 4% in tank
Well 2	Plateau S- Wells 2.1 &2.2	Sodium hydroxide	Delivered at 50%, diluted to 25% in day tank
		Manganese Filtration	Filtration using ATEC sand filter
		Chlorination	On-site Generation at 0.8 – 1%
		Fluoridation	Sodium Fluoride to Saturator, reduced to 4% in tank

Table 6-6 (cont.)
Major System Components - Treatment Facilities

Treatment Facility	Supply Source	Treatment Provided	Treatment Type
Well 4	Plateau N/S - Wells 4R, 11.1 &11.2	Manganese Filtration	Filtration using ATEC sand filter
		Iron & Manganese Removal	Ferric chloride for Coagulation
		Chlorination	On-site Generation at 0.8 – 1%
		Fluoridation (Only to 650 Zone)	Sodium Fluoride to Saturator, reduced to 4% in tank
Well 9	Plateau S - Wells 7,8, & 9	Sodium hydroxide	Delivered at 50%, diluted to 25% in day tank
		Chlorination	On-site Generation at 0.8 – 1%
		Fluoridation	Sodium Fluoride to Saturator, reduced to 4% in tank
Well 10	Plateau S - Well 10	Sodium hydroxide	Delivered at 50%, diluted to 25% in day tank
		Chlorination	On-site Generation at 0.8 – 1%
		Fluoridation	Sodium Fluoride to Saturator, reduced to 4% in tank
Section 36	Plateau S - 550 Zone	Chlorination	On-site Generation at 0.8 – 1%
		Fluoridation	Sodium Fluoride to Saturator, reduced to 4% in tank
Well 12	Cascade View - Well 12R	Manganese Filtration	Filtration using ATEC sand filter
		Chlorination	On-site Generation at 0.8 – 1%
		Fluoridation	Sodium Fluoride to Saturator, reduced to 4% in tank
Well13	Cascade View - Well 13R	Manganese Filtration	Filtration using ATEC sand filter
		Chlorination	On-site Generation at 0.8 – 1%
		Fluoridation	Sodium Fluoride to Saturator, reduced to 4% in tank

Table 6-7
Major System Components - Storage Facilities

Storage Tanks	Pressure Zone Location	Material	Diameter (feet)	Base Elevation (feet, NAVD88)	Height to Overflow (feet)
3 MG Tank[1]	Plateau S – 700 zone	Steel	67	587.5	116
Section 36 E (4 MG)	Plateau N – 550 zone	Steel	165	525	25
Section 36 W (4 MG)	Plateau N – 550 zone	Steel	165	525	25
2 MG Tank	Plateau S – 650 zone	Steel	65	563.5	89
7 MG Tank	Plateau S – 650 zone	Steel	140	593	61
297 Tank (2.25 MG)	Plateau S – 297 zone	Steel	100	259	38
Well 12 Tank (600 KG)	Cascade View – 730 zone	Steel	48	636	45
Well 13 Tank (280 KG)	Cascade View – 730 zone	Concrete	26	663.5	75

[1] Jointly owned and used with Northeast Sammamish Sewer and Water District

Table 6-8
Major System Components - Water Distribution System

By Water Main Size							
Size	**Type**	**Length (Miles)**				**Water Main Size**	**Total Length (Miles)**
		Cascade View Zone	**South Plateau Zone**	**North Plateau Zone**	**Total**		
2"	GALV	0.00	0.15	0.03	0.18	2"	5.10
2"	HDPE	0.00	0.09	0.00	0.09		
2"	PVC	0.50	2.47	1.86	4.83		
3"	PVC	0.00	0.71	0.00	0.71	3"	0.71
4"	AC	0.00	2.86	0.39	3.25	4"	18.91
4"	DI	0.48	12.48	2.42	15.38		
4"	PVC	0.00	0.11	0.07	0.18		
4"	STEEL	0.00	0.10	0.00	0.10		
6"	AC	2.50	7.29	0.34	10.13	6"	12.14
6"	DI	0.23	1.53	0.16	1.92		
6"	PVC	0.00	0.09	0.00	0.09		
8"	AC	0.87	12.25	1.73	14.85	8"	183.32
8"	CI	0.00	0.01	0.00	0.01		
8"	DI	14.61	123.07	26.49	164.17		
8"	HDPE	0.03	1.00	0.13	1.16		
8"	PVC	2.54	0.26	0.33	3.13		
10"	DI	0.00	0.06	0.05	0.11	10"	0.11
12"	AC	0.00	1.06	0.10	1.16	12"	56.71
12"	DI	2.24	40.86	12.19	55.29		
12"	HDPE	0.00	0.12	0.00	0.12		
12"	PVC	0.00	0.14	0.00	0.14		
16"	DI	0.00	8.77	2.23	11.00	16"	11.00
18"	DI	0.00	0.00	0.88	0.88	18"	0.88
20"	DI	0.00	1.19	0.41	1.60	20"	1.78
20"	HDPE	0.00	0.18	0.00	0.18		
24"	DI	0.00	4.25	0.27	4.52	24"	4.79
24"	HDPE	0.00	0.27	0.00	0.27		
30"	DI	0.00	0.42	0.00	0.42	30"	0.42
36"	DI	0.00	0.02	0.00	0.02	36"	0.02
Total		**24.00**	**221.81**	**50.08**	**295.89**	**Total**	**295.89**

Table 6-8 (cont.)
Major System Components - Water Distribution System

By Water Main Type				
Water Main Type	**Length (Miles)**			
	Cascade View Zone	**South Plateau Zone**	**North Plateau Zone**	**Total**
AC	3.37	23.46	2.56	29.39
CI	0.00	0.01	0.00	0.01
DI	17.56	192.65	45.10	255.31
GALV	0.00	0.24	0.03	0.27
HDPE	0.03	1.66	0.13	1.82
PVC	3.04	3.78	2.26	9.08
STEEL	0.00	0.10	0.00	0.10
Total	**24.00**	**221.81**	**50.08**	**295.89**

Table 6-9
Major System Components - Booster Pump Stations

Booster Pump Stations	Supply Zone - Zone Served	Current Production Rate (gpm)	Notes
43rd Booster	***Plateau S – from 297 to 650 zone***		
Pump 1 (150 hp)		1,000	
Pump 2 (250 hp)		1,800	
297 Booster	***Plateau S – from 297 to 650 zone***		
Pump 1 (150 hp)		1,000	
Pump 2 (450 hp)		3,200	
Pump 3 (250 hp)		2,000	
Well 4 Booster	***Plateau N/S – from 550 to 650 or 700 zone***		
Pump 1 (60 hp)		750	
Pump 2 (60hp)		750	
Pump 3 (60 hp)		750	
Pump 4		Future	
Well 12	***Cascade View – 730 zone***		
Pump 1 (7.5hp)	Jockey pump	250	
Pump 2 (40 hp)	Variable Frequency Drive (VFD) pump	200 to 900	Flow varies
Pump 3 (40 hp)	Fire Pump – support	1,200 to 1,500	
Pump 4 (40 hp)	Fire Pump – support	1,200 to 1,500	
NE 80th Regional Line	***Cascade View – from Regional Line pressure to 730 zone***		
Pump 1 (10 hp)	VFD Pump	400	
Boulder Creek	***Plateau S – from 650 to 700 BC zone***		
Pump 1 (7.5 hp)	Jockey pump	70	Pumps Alternate
Pump 2 (7.5 hp)	Jockey pump	70	
Pump 3 (7.5 hp)	Jockey pump	70	
Section 36	***Plateau S – from 550 to 650 zone***		
Pump 1 (75 hp)		1,600	
Pump 2			
Pump 3 (75 hp)		1,600	
Overdale	***Plateau S – from 650 to 700 OV zone Variable Frequency Drive pump***		
Pump # 1 (7.5 hp)	Jockey pump	120	
Pump # 2 (7.5 hp)	Jockey pump	120	

Table 6-10
Major System Components - Pressure Reducing Stations

Pressure Reducing Stations	Location & Address	Zone Served	Bypass Size	Main Size
1	22820 NE 8th St	NP- 700 SH to 550	3”	10”
2	22841 NE 8th St	NP- 700 SH to 550	2”	6”
4	228th Ave NE & NE 2nd St	SP- 650 to 475	3”	6”
5	1210 212th Ave NE	NP- 700 to 540	2”	6”
6	NE 14th St & 228th Ave NE	NP- 700 to 550	2”	6”
7	NE 19th St & 228th Ave NE	NP- 700 to 550	2”	6”
8	208th Ave NE & Louis Thompson Rd	SP- 475 to 375	1.5”	6”
9	207th Ave NE & NE 5th PL	SP- 475 to 375	2”	6”
10	E LK Sammamish & Louis Thompson Rd	SP- 375 to 297	none	6”
11	19609 21st Ave SE	SP- 560 to 466 Sole supply	1.5”	8”
12	19580 SE 24th Way	SP- 650 to 400 WAV Sole supply	3”	10”
13	194th Ave SE & SE 24th Way	SP- 400 WAV to 297	3”	10”
16	200th Ave SE & SE 29th St	SP- 650 to 510 Sole supply	2”	6”
17	SE 29th St & 198th Ave SE	SP- 510 to 499 Sole supply	2”	6”
18	21985 SE 43rd Way	SP- 650 to 297	none	10”
19	930 218th Ave NE	NP- 700 to 540	2”	6”
20	1630 207th Ave NE	NP- 700 to 475 SAMSUN Sole supply	2"	6”
22	NE 16th St & 204th Ave NE	NP- 475 SAMSUN-open Sole supply	2”	6”

Table 6-10 (cont.)
Major System Components - Pressure Reducing Stations

Pressure Reducing Stations	Location & Address	Zone Served	Bypass Size	Main Size
24	210th Ave NE & NE 8th St	SP- 475 to 390	2”	6”
25	4135 Peregrine Point Way SE	SP- 450 to 297	2”	6”
28	Louis Thompson RD & 211th Ave SE	SP- 650 to 475	2”	6”
29	244th Ave NE & NE 30th PL	NP- 550 to 400 BROD Sole supply	2”	6”
30	SE 35th St & 207th Ave SE	SP- 650 to 566 Sole supply	1"	2”
31	421 228th Ave NE	NP- 700 to 590	3”	10”
32	Inglewood Hill Rd & 207th Ave NE	SP- 475 to 390	2”	6”
33	Inglewood Hill Rd & 205th Ave NE	SP- 390 to 297	2”	6”
34	228th Ave NE & NE 8th St	SP- 700 to 590	3”	10”
35	NE 40th & 270th Ave NE	CV- 730 to 650 CV	2”	6”
36	26920 NE 50th St	CV-730 to 650 CV	3"	6"
37	3314 264th Ave NE	CV-730 to 642 Sole supply	2”	6”
38	3006 264th Ave NE	CV- 642 to 550 CV Sole supply	2”	6”
39	25911 NE 34th St	CV- 730 to 590 CV Sole supply	3”	6”
41	22829 Black Nugget RD	SP- 450 WAK to 297	3”	12”
42	23425 SE Black Nugget RD	SP- 650 to 450 WAK	3”	10”
43	23300 SE Black Nugget Rd	SP- 650 to 450 WAK	3”	10”

Table 6-10 (cont.)
Major System Components - Pressure Reducing Stations

Pressure Reducing Stations	Location & Address	Zone Served	Bypass Size	Main Size
45	SE 277th Ave & SE 24th St.	SP- 650 to 550 ALD	3”	6”
46	5300 229th Ave SE	SP- 650 to 475 PH Sole supply	3”	6”
47	Aldarra Clubhouse	SP- 550 ALD to 310 Sole supply	(2) 2"	6"
49	3843 212th Ave SE	SP- 650 to 450	3”	6”
50	2801 275th Ave SE	SP- 650 to 550 ALD	3”	6”
51	21026 NE 4th St	SP- 650 to 475	3”	6”
52	22701 SE 51st ST	SP - 650	6"	24"
54	924 207th Ave NE	SP- 475 to 390	3"	6"
55	4060 212th Ave SE	SP- 450 to 297	3"	6"
56	212th Ave SE & 212th Way SE	SP- 650 to 450	3"	6"
57	2323 200 Ave SE	SP-650 to 560 Sole supply	3"	6"
58	22898 SE 56th St	SP- 650 to 400 OV Sole supply	-	2”

NP = Plateau North, SP = Plateau South, CV = Cascade View

Table 6-11
Major System Components - Control Valves

Control Valves	Location	Facility Type	Control Description
Well 7 Facility Pressure Relief Valves	Plateau S 6503 E. LK. Samm. SE	Well Supply Pressure Relief Valves	Maintain an upper pressure limit inside Well 7 in case a distribution valve is closed.
Wells 11 Facility Pressure Relief Valves	Plateau N 400 228th Ave NE	Well Supply Pressure Relief Valves	Maintain an upper pressure limit inside Well 11 in case a distribution valve is closed.
South Regional Flow Control Valve	Plateau S 940 1st Ave NE	Regional Supply Flow Control Valve	Control water flow from the regional pipeline into the District system by setting a rate of flow. Can control locally and by the computer by selecting a flow rate and a 297 Tank operation set point.
North Regional (NE 80th) Flow Control Valve	Cascade View 24398 NE 80th ST	Intertie Flow Control Valve	Functions as a check valve to stop flow from the District system back to Redmond, as the regional water from Redmond may be at a pressure lower than the 730 zone.
Well 12 Tank Flow Control Valve	Cascade View Zone 26410 NE 50th ST	Flow Control Valve	Allows water to flow into the Well 12 Tank from the distribution system.
Section 36 Tank Altitude Valve	Plateau N 26015 E Main Dr.	Altitude Valve for Two Way Flow	Controls water level in the Section 36 Tanks (550 zone). The valve closes at high tank level and opens on falling pressure in the 550 zone.
7 Million Tank Altitude Valve	Plateau S 23214 SE 47th way	Altitude Valve for Two Way Flow	Controls water level in the 7 MG Tank (650 zone). The valve closes at high tank level and opens on falling pressure in the 650 zone.

Table 6-11 (cont.)
Major System Components - Control Valves

Control Valves	Location	Facility Type	Control Description
7 MG Tank Earthquake Valve	Plateau S 23214 SE 47th Way	Additional Pilot Control with the 7 MG Altitude Valve	Activates in a seismic event to close the 7 MG Altitude Valve
297 Tank Altitude Valve	Plateau S 22664 SE 56th ST	Altitude Valve for Two Way Flow	Controls water level in the 297 Tank. The valve closes at high tank level and opens on falling pressure in the 297 zone.
Earthquake Vault	Plateau S 5100 227th Ave SE	Pressure differential control valve	Closes 24-inch water main between 7 MG Tank and 297 Tank on low pressure below Vault. [6" bypass will still be open.] Swing Check is closed when booster is not pumping.
Well 4 Facility Flow Control Valve	Plateau N 23001 Main Street	Flow Control Valve	Allows water from the 700 or 650 zones to flow into the 550 zone based on set points from the Section 36 Tanks.
Section 36 Booster Flow Control Valve	Plateau N 26015 E Main Dr.	Flow Control Valve	Allows water from the 650 zone to flow into the 550 zone by pressure set points, if open. Normally closed.
Issaquah Intertie Flow Control Valve	Plateau S SE 56th & SE 221st	Flow Control Valve	Combination pressure reducing & pressure sustaining valve, originally for automatic operation for fire protection in Issaquah business area. Currently manual operation only.

Table 6-12

Major System Components - Additional Zone Valves

Higher Pressure Zone	Lower Pressure Zone	# Zone Valves	Valve Location	Description	Notes
700 Plateau N	540 Plateau N	1	216th Ave NE + NE 10th Pl	North valve, 2 valve cluster	
540 Plateau N	475 Plateau S	4	212th Ave NE + Inglewood Hill Rd	Northeast valve, 4 valve cluster	Segregated to Blended connection
			216th Ave NE + NE 8th St	West valve, 4 valve cluster	Segregated to Blended connection
			216 Ave NE + NE 8th St	South valve, 4 valve cluster	Segregated to Blended connection
			NE 8th St + 218th Ave NE (west jog)	South valve, 2 valve cluster	Segregated to Blended connection
700 Plateau N	590 Plateau N	1	222nd Pl NE + NE 7th St	East valve, 2 valve cluster	
590 Plateau N	475 Plateau S	1	222nd Pl NE + Inglewood Hill Rd	West valve, 2 valve cluster	Segregated to Blended connection
650 Plateau S	475 Plateau S	5	221st Ave NE at 130 221st Ave NE	Single in-line valve	
			216th Ave NE + NE 4th St	Single in-line valve south of intersection	
			Main St + 210th Pl NE	Single in-line valve east of intersection East of 3-valve cluster	

Table 6-12 (cont.)
Major System Components - Additional Zone Valves

Higher Pressure Zone	Lower Pressure Zone	# Zone Valves	Valve Location	Description	Notes
650 Plateau S (cont'd)	475 Plateau S (cont'd)	5 (cont'd)	SE 5th St between 209th + 201st SE	Single in-line valve	
			208th Ave SE at 611 208th Ave SE	South valve, 3 valve cluster	
475 SamSun Plateau N	390 Plateau N	2	NE 16th + 204th Ave NE	North valve, 4 valve cluster	
			NE 16th + 204th Ave NE	West valve, 4 valve cluster	
550 Plateau N	Wells 11 Plateau N	1	Eastlake High School - south west of Wells 11	Cla-Valve in "Flow Control" Vault	Allows 550 treated water to flow to Well 11 Raw Water line on pressure drop in raw water line
Wells 11 Plateau N	700 Plateau N	1	Main Street at Well 4 Site	Eastern cluster West Valve of 3-valve cluster (east of hydrant valve)	Well 11 Raw Water
650 Plateau S	550 Plateau N	3	Main Street at Well 4 Site	West Valve, 3-valve cluster (West of Hydrant, north valve = hydrant valve)	Segregated to Blended connection
			Main Street at 228th Ave	East Valve, 3-valve cluster on 12" DI to east	Segregated to Blended connection

Table 6-12 (cont.)
Major System Components - Additional Zone Valves

Higher Pressure Zone	Lower Pressure Zone	# Zone Valves	Valve Location	Description	Notes
650 Plateau S (cont'd)	550 Plateau N (cont'd)	3 (cont'd)	228th Ave NE + NE 2nd	North Valve, 3-valve cluster	Segregated to Blended connection
466 Plateau S	297 Plateau S	1	SE 22nd Pl + E Lake Sammamish Pkwy SE	East Valve, 2-valve cluster	
499 Plateau S	297 Plateau S	1	19732 SE 30th St + 198th Ave SE	Single in-line valve	
Well 9 30" Plateau S	297 Plateau S	1	229th Ave between SE 66th St + E Lake Sammamish Pkwy SE	North valve on 12-inch connector 2-valve cluster	Connection between 30-inch treated and 12-inch distribution before full contact time.
650 Plateau S	550 ALD Plateau S	1	Duthie Hill Rd + 278th Ave SE	West Valve, 4-valve cluster	

This table lists zone valves not associated with PRVs.

Table 6-13
Major System Components - Interties

Interties	Zone	Location	Operation Status
Issaquah	Plateau S 297 zone	SE 56th Street at 221st SE	When ON, Automatic on reduced pressure in Issaquah, Manual Operation to District, Metered, Bi-directional Normally Closed
Issaquah	Plateau S 297 zone	Well 9 - 940 1st Avenue NE	Manual Operation, Metered, Bi-directional Normally Closed
Northeast Sammamish Sewer & Water District	Plateau S 297 zone	E. Lake Sammamish Pkwy at NE 20th	Manual Operation, Unmetered valve, Bi-directional Normally Closed
Northeast Sammamish Sewer & Water District	Plateau N 700 zone	216th Avenue NE at NE 17th	Free flowing, Metered, Bi-directional Normally Open
Northeast Sammamish Sewer & Water District	Plateau N 700 zone	Green Acres - 1910 226th NE	Free flowing, Metered, Bi-directional Currently Closed
Northeast Sammamish Sewer & Water District	Plateau N 700 zone	Shannonwood/ Sterlingwood - NE 19th Place @ 208th	Manual Operation, Valve - metered by NESSWD, Bi-directional Normally Closed
Union Hill Water Association	Cascade View - 730 zone	NE Union Hill Rd at 244th Avenue NE	Manual Operation, Unmetered valve, Bi-directional, Flow to District requires pump Normally Closed
Union Hill Water Association	Cascade View - 730 zone	NE 52nd Street at 244th Avenue NE	Manual Operation, Unmetered valve, Bi-directional, Flow to District requires pump Normally Closed
Ames Lake Water Association	Cascade View - 650 CV zone	NE Union Hill Rd at 272nd Avenue NE	Manual Operation, Metered, Flow to Ames Lake only Normally Closed

6.3.1.1 Plateau Zone Components

The Plateau Zone is divided into the “North End” and the “South End”. The approximate boundary between these two “ends” is Main Street to the east of 228th Avenue and Inglewood Hill Road to the west of 228th Avenue. The segregation is required due to a storage tank in the North End that is shared with NESSWD. The water treatment allowed in the North End is limited by agreements with NESSWD and does not allow chlorination for disinfection or fluoridation. The water supplied to the North End is segregated from the treated and blended water supplied to the South End.

The South End’s primary pressure zones include the 650, 475 and 297 Zones. The North End’s primary pressure zones are the 700 and 550 pressure zones. Each “end” has several other smaller pressure zones that are used to provide service across the widely varying elevations that make up the Plateau Zone.

The operational scheme reflected in the following description utilizes groundwater sources in preference to the regional sources, to utilize the water that costs the least to produce and honors the District’s agreement with Cascade. Based on water treatment restrictions for the segregated North End the scheme uses at least one of either Wells 4R, 11.1 or 11.2 at all times for the North End supply. To most efficiently use the water, an attempt is also made to supply the 297 Zone using a valley well (7, 8 or 9). [Well 9 is supplemental to Wells 7 and 8 and is utilized as a back-up to these sources. In 2017 the DOE provided a Temporary Change authorizing Well 9 as a Temporary Additional Point of Withdrawal to the Wells 7 and 8 year-round water rights. The District is applying to DOE for a Permanent Change to make Well 9 an Additional Point of Withdrawal.]

<u>South End</u>

The major components for the South End are described in the following sections by component type. Certain components that operate in the South End vary primarily by the season of the year. Two seasons are considered, winter and summer. The winter season runs from November through April and the summer season runs from May through October.

Source of Supply

The South End of the Plateau Zone is supplied by Wells 1R, 2.1 & 2.2 (a well field), 4R, 7, 8, 9, 10, 11.1, and 11.2 and the South Regional Connection. The District meter for the Plateau Zone supply from Cascade is located at the District’s Well 9 site.

The following descriptions reflect what would be considered a normal operational scheme. There are always variations to this guide reflecting actual demands and operational situations.

The South Regional Connection is generally used year-round, with a minimum of 0.5 MGD, and a target for an average flow rate of 1.0 MGD. Starting in 2018 the South Regional Connection has been used at a higher rate, to have a blending ratio of 2:1

regional water to groundwater from Wells 7, 8 or 9, due to groundwater quality concerns.

During the winter months Well 7, Well 4R, Well 11.2 and the South Regional Connection provide the primary source of water to the South End. Well 4R, Well 7 and the South Regional Connection are pumped at constant rates throughout the winter. Well 11.2 varies the flow to reflect the variations in demand through the winter. Well 2.1 is often turned on during the spring and fall months to further supplement the supply.

During the summer months in the Issaquah Valley wells, Well 7 is shut down and Well 8 is started. However, starting in 2018 Well 9 is being used in place of Wells 7 and 8 due to groundwater quality concerns in the Issaquah Valley Aquifer. The operation also normally replaces Well 2.1 with Well 2.2. Well 1 and Well 10 are added as active sources and the use of Well 4R and Well 11.2 continues. During the summer it is anticipated that Well 1, Well 2.2 and Well 10 will be in constant use. Well 4R, Well 8, and Well 11.2 will reflect the variations throughout the summer months. See Table 6-5 for a summary of the supply for the entire system.

Treatment Facilities

Water treatment facilities are located with other major components. Water from the Issaquah Valley Wells, 7, 8 and 9, and Shallow Plateau Aquifer wells, 1R, 2.1 & 2.2, and 10, are treated for pH adjustment with sodium hydroxide to raise the pH to 7.8, disinfected with on-site generated chorine to 0.5 ppm, and fluoridated to 0.7 ppm. Wells 7, 8 and 9 are treated at the Well 9 facility. Wells 2.1 and 2.2 are treated in the Well 2 building. Wells 1R and 10 are each treated at their respective sites.

Water from Wells 4R, 11.1 and 11.2, drawing from the Deep Plateau Aquifer, is treated at the Well 4 Treatment Facility using chlorination followed by an ATEC filter system to remove iron and manganese. Ferric chloride is used in conjunction with the ATEC filter system to improve flocculation efficiency and reduce the amount of water wasted in the treatment backwash process. Water being fed to the South End is also disinfected with on-site generated chlorine to 0.5 ppm and fluoridated to 0.7 ppm in the Well 4 Treatment Facility. Water being provided to the North End of the Plateau Zone through the Well 4 Treatment Facility is not fluoridated, and chlorination is only provided associated with the ATEC filter system to remove iron and manganese.

Water that is boosted from the 550 Pressure Zone to the 650 Pressure Zone at the Section 36 Booster Pump Station is chlorinated for disinfection to 0.5 ppm and fluoridated to 0.7 ppm with treatment facilities located in the Section 36 Booster Pump Station prior to being fed to the 650 Pressure Zone.

The regional water supplied to the District through the South Regional Connection has been chlorinated and fluoridated prior to conveyance to the District. See Table 6-6 for a summary of treatment facilities and their capabilities.

Analyzers are located at the facilities to check the pH, fluoride and chlorination levels. These run continuously and are connected to the District's SCADA system, and can send

notifications if the levels are outside of preset parameters.

The Sodium Hydroxide effect is checked through the pH analyzer. In addition, the District checks the ratio of the amount of sodium hydroxide used to the amount of water pumped through the facility. Occasional hand sampling is done as well to verify the analyzer results.

The fluoride and chlorine analyzer results are double checked by calculating the ratio of the amount of each chemical added to the amount of water pumped. These figures are then compared to the previously determined standard quantity expected to be required to achieve the desired levels in the distribution system. The chlorination for disinfection facilities were originally designed to provide a chlorine residual of 0.2 ppm. In some cases, this also meets a CT of 6. For the chlorination for disinfection, the chlorine residual in the system is further checked with each of the Bacteriological samples taken in the distribution system each month.

The ferric chloride treatment is monitored three times per week by checking the ratio of rate of ferric chloride use to the volume of water backwashed. This ratio is checked against the expected rate of ferric chloride use that was initially set with a jar test.

Storage Tanks

Five storage tanks provide service to the South End. The 297 Tank is located in the 297 Pressure Zone and is used for service to the 297 Zone as well as indirectly to the 650 Zone. The 2 MG Tank and 7 MG Tank are both in the 650 Zone. The Section 36 E and W Tanks are in the 550 Zone in the north end, but provide indirect (non-gravity) storage for the south end 650 Zone (via pumping). One of the 650 Zone tanks can be taken offline for periodic maintenance. The 297 Tank can be bypassed if necessary for cleaning or maintenance.

All District tanks, except the 2 MG Tank have separate inflow/outflow pipes. A high standpipe inlet coupled with a low outlet configuration assists with turnover and mixing within the tanks. The inlet elevation close to the overflow elevation also causes the distribution system to see full head pressure whenever the tank is in fill mode. See Table 6-7 for more detail

Water Distribution System

The South End of the Plateau includes distribution and transmission mains ranging in size from 1-inch to 36-inch, made of steel, asbestos cement (AC), polyvinyl-chloride (PVC), high-density polyethylene (HDPE), and ductile iron (DI). The oldest remaining pipes, made of steel, were installed in 1959. Newer pipes are all DI, with PVC and HDPE used under certain specific construction circumstances.

The South End includes approximately 75 percent of the District's distribution system. The majority of these water mains, over 86 percent, are DI. AC pipe makes up just short of 11 percent, PVC less than 2 percent and the remainder is galvanized, steel or HDPE.

There is also a 1,450 foot section of 28-inch diameter HDPE17 pipe, located in the western portion of the Section 36 Park loop. See Table 6-8 for more detail.

Booster Pump Stations

The South End is also served with five booster pump stations, the 297 Booster, 43rd Booster, Boulder Creek Booster, Overdale Booster, and the Section 36 Booster. The 297 Booster pump station and the 43rd Booster pump station pump from the 297 Zone into the 650 Zone, and into the 2 MG and the 7 MG Tanks. The Section 36 Booster also pumps to the South End 650 Zone from the 550 Zone in the vicinity of the Section 36 E and W Tanks. The Boulder Creek and Overdale Boosters provide domestic flows from the 650 Zone to two small residential 700 Zones adjacent to the 7 MG Tank. The booster pumps remain active throughout the year. See Table 6-9 for an overview of the District's booster pump stations.

Pressure Reducing Stations

There are thirty-two pressure reducing valve (PRV) stations in the South End of the Plateau Zone. They allow water to flow from the 650 Zone to lower zones. Twenty-three of the PRVs flow to pressure zones that are only supplied by pressure reducing stations.

Nine of the twenty-three supply pressure zones have only one PRV providing supply, with no redundancy. These include PRV 11 serving Sammamish Woods Highlands, PRV 12 serving SE 24th Way, PRV 16 and PRV 17 serving portions of Upper Waverly Hills, PRV 30 serving portions of Rockmeadow Farms, PRV 46 serving Park Hill at Issaquah Single-Family and PRV 47 serving the Aldarra Golf Club, PRV 57 serving Sammamish Woods and Loree Estates, and PRV 58 serving a small portion of Overdale.

There are eight abandoned pressure reducing stations within the south end of the District. These include PRV 14, PRV 15, PRV 21, PRV 23, PRV 26, PRV 27, PRV 44, and PRV 48. PRV 53 is listed as Not In Operation.

For an overview of the operational pressure reducing stations, see Table 6-10.

Control Valves

There are seven control valves associated with the South End of the Plateau Zone. Four of the control valves are directly associated with and/or located at major District facilities. Two control valves are associated with interties to other water purveyors. See Table 6-11 for more details on the control valves.

One valve not directly associated with operation of a major facility is the Earthquake Vault control valve. This valve's function is to close the 24-inch diameter transmission main in the event of low pressure on the down-stream side of the valve. The 24-inch main supplies water to the 650 Zone from the 297 Booster Station. The 24-inch main alignment traverses a slope that has a history of slides. The automatic valve closure would limit the loss of water from the 650 Zone through a pipe break.

The system includes nine additional zone control valves (see Table 6-12). These valves are located at five zone or major facility interface locations within the South Plateau zone. There are eight additional valves at three locations that separate the South Plateau and North Plateau zone.

Interties

The South End system includes three interties between the District and other water purveyors. There are two emergency interties with the City of Issaquah. One, located at the Well 9 facility, is designed to flow either direction when opened manually. The other, located on SE 56th Street just east of the Issaquah Creek Bridge, was originally designed to automatically provide fire flow from the District's 297 Zone to the City's Pickering Farm area, if the City of Issaquah's 297 Zone experienced a reduction in pressure. However, this intertie is now only operated manually. Table 6-13 contains an overview of the district's interties.

Emergency Operation Considerations

The multiple facilities in the South End provide redundancy for source, storage and booster pumping capabilities. The District also has back-up power generators permanently located at the Well 1R, Well 4R, Well 9, and 297 Booster Pump facilities, and has portable generators available that can provide power to the Section 36 Booster Pump and Well 2.1 & 2.2 or Well 10 facilities.

North End

The major components for the North End are described in the following sections by component type. The configuration of North End components is largely the same throughout the year. One operational difference is that only one of the two Section 36 Storage tanks is used during the winter months, whereas both are used during the summer.

Source of Supply

Wells 4R, 11.1 and 11.2 provide the supply to the North End. All of the wells can be used during any time of the year. The raw water from Wells 11.1 and 11.2 is piped to the Well 4 site, where it joins with water pumped from Well 4R prior to being treated and fed into the distribution system. These wells can pump to the 700, 650 or 550 Pressure Zones and is directed to the zone currently being provided supply by valves at the Well 4 treatment facility. See Table 6-5 for a summary of the supply for the entire system.

Treatment Facilities

Water from Well 4R, Well 11.1 and Well 11.2 is treated at the Well 4 Treatment Facility. The treatment for water destined for the North End includes chlorination followed by an ATEC filter system to remove iron and manganese. Ferric chloride is used in conjunction

with the ATEC filter system to improve flocculation efficiency and reduce the amount of water wasted in the treatment backwash process.

Analyzers are located at the facilities to check the chlorination levels. These run continuously and are connected to the District's SCADA system, and can send notifications if the levels are outside of preset parameters. See Table 6-6 for a summary of treatment facilities and their capabilities.

The ferric chloride treatment is monitored three times per week by checking the ratio of rate of ferric chloride use to the volume of water backwashed. This ratio is checked against the expected rate of ferric chloride use that was initially set with a jar test.

Storage Tanks

The 3 MG Tank is located in the 700 Pressure Zone and is shared with the NESSWD. The Section 36 E & W Tanks, each 4 MG, are located in and provide direct storage for the 550 Zone. The Section 36 E & W Tanks also provide storage for the South End of the Plateau Zone in conjunction with the Section 36 Booster Pump Station that pumps to the 650 Pressure Zone. See Table 6-7 for more detail.

Water Distribution System

The North End of the Plateau includes distribution and transmission mains ranging in size from 2-inch to 24-inch, made of galvanized steel, asbestos cement (AC), polyvinyl-chloride (PVC), and ductile iron (DI). The oldest remaining pipes are AC and a small amount of galvanized steel and were installed in 1968. Newer pipes are all DI, with PVC used under certain specific construction circumstances.

The North End includes approximately 17 percent of the District's distribution system. The majority of these water mains, over 90 percent, are DI. AC pipe makes up over 5 percent, PVC over 4 percent and the remainder is galvanized steel. See Table 6-8 for more detail.

Booster Pump Station

The Well 4 booster station takes 550 Zone water to supply the 700 pressure zone, as a backup to direct supply from the wells. The booster station can also supply the Plateau South 650 Zone from the 550 Zone. See Table 6-9 for an overview of the District's booster pump stations.

Pressure Reducing Stations

There are ten pressure reducing stations in the North End of the Plateau Zone. They allow water to flow primarily from the 700 Pressure Zone to lower zones. Seven of the pressure reducing stations flow to pressure zones that are only supplied by pressure reducing stations. Note that PRV 22 is in place, but currently open and not reducing pressure.

Three of the seven supply pressure zones have only one pressure reducing station

providing supply, with no redundancy. These include PRV 20 serving the Sammamish Sunset area, PRV 22 in Inglewood Station (but currently operating fully open), and PRV 29 serving the Broadmoore Estates area.

There is one abandoned pressure reducing station, PRV 3, within the north end of the District. Additionally, PRV 53 is listed as Not In Operation.

For an overview of the operational pressure reducing stations, see Table 6-10.

Control Valves

There are five control valves associated with the North End of the Plateau Zone. They are all directly associated with and/or located at major District facilities. Three of the control valves can allow flow into the 550 Zone. Neither are anticipated to be used except on an emergency basis.

One is a flow control valve located near the Wells 11.1 and 11.2 site. Use of this valve would result in the raw water from Wells 11.1 or 11.2 to be delivered to the 550 Pressure Zone. The second is a flow control valve located near the Section 36 Tank. The third is a pressure reducing flow control valve in the Well 4 Treatment Facility that will allow water to flow directly from this facility at the 650 Pressure Zone to the 550 Pressure Zone. The second and third would allow water that has been treated including chlorination for disinfection and fluoridation, to flow to the 550 Pressure Zone, which does not normally have water treated with chlorination for disinfection or fluoridation. See Table 6-11 for more details on the control valves.

The system also includes six additional zone control valves (see Table 6-12). These valves are located at four zone or major facility interface locations. There are eight additional valves that separate the South Plateau and North Plateau Zones.

Interties

There are four interties between the District and NESSWD. Three are located in the 700 Zone and one in the 297 Zone. Two of the 700 Zone interties, 216th and Green Acres, are free-flowing, allowing water to move between the 3 MG tank and the NESSWD distribution system. The other two interties, emergency interties, located on E Lake Sammamish Pkwy at NE 20th and north of the Shannonwood development, require manual operation. Table 6-13 contains an overview of the District's interties.

Emergency Operation Considerations

The number of facilities providing service to the North End is considerably fewer than to the South End, but there is still redundancy in supply sources. Permanent on-site back-up power generation is available at the Well 4 facility. The District can operate the 700 Zone with the Well 4 Booster pump station when the 3 MG tank is offline for cleaning or maintenance. In addition, NESSWD facilities provide redundancy to the North End.

6.3.1.2 Cascade View Zone Components

The components that operate in the Cascade View Zone, described in the following sections, vary with the season of the year. Winter and summer seasons are considered: from November through April, and from May through October, respectively.

Source of Supply

The Cascade View Zone is served by Wells 12R and 13R and the North Regional Connection. During the winter months Well 13R and the North Regional Connection provide water for this zone. During the summer months Well 12R is added to the system. Well 14 previously served this zone but has been decommissioned due to aesthetic taste and odor issues.

The North Regional Connection provides the Cascade View Zone connection to the regional system. The current configuration includes wheeling water from the Seattle Tolt pipeline through the City of Redmond system in Redmond Ridge to NE 80th Street. A transmission main in NE 80th carries the water from the Redmond Ridge site to the District's boundary at 244th Avenue NE. The District meter for the Cascade View Zone supply from Cascade, used for District control purposes, is located at the eastern terminus of the 8-inch diameter transmission main that extends from Redmond Ridge facilities at Redmond Ridge Dr. NE just north of NE 80th to the District's corporate limit at 244th Avenue NE (if extended) on NE 80th. The City of Redmond also has a meter located at the western terminus of the transmission main which is the official meter for Cascade supply. A booster pump system (see below) is required to fully utilize the intertie at normal system pressures. See Table 6-5 for a summary of the supply for the entire system.

Treatment Facilities

Treatment facilities are located at both Well 12 and Well 13 sites.

The Well 12 site includes chlorination followed by an ATEC filtration system for the removal of iron and manganese. The old 60,000 gallon storage tank is utilized as a settling tank as part of this treatment system. The chlorination for disinfection is at 0.5 ppm. Fluoridation to 0.7 ppm is also provided at the Well 12 location prior to delivering the water to the distribution system.

The Well 13 site also includes chlorination followed by an ATEC filtration system for the removal of iron and manganese. The chlorination for disinfection is at 0.5 ppm. Fluoridation to 0.7 ppm is also provided at the Well 13 location.

The regional water supplied to the District through the North Regional Connection has been chlorinated and fluoridated prior to conveyance to the District.

Analyzers are located at the facilities to check the fluoride and chlorination levels. These run continuously and are connected to the District's SCADA system, and can send notifications if the levels are outside of preset parameters. See Table 6-6 for a summary

of treatment facilities and their capabilities.

The fluoride and chlorine analyzer results are double checked by calculating the ratio of the amount of each chemical added to the amount of water pumped. These figures are then compared to the previously determined standard quantity expected to be required to achieve the desired levels in the distribution system. The chlorination for disinfection facilities were originally designed to provide a chlorine residual of 0.2 ppm. In some cases this also meets a CT of 6. For the chlorination for disinfection, the chlorine residual in the system is further checked with each of the Bacteriological samples taken in the distribution system each month.

Storage Tanks

Two storage tanks serve the Cascade View Zone. The Well 12 Tank, at 600,000 gallons, and the Well 13 Tank, at 275,000 gallons, are located at the respective well sites noted in their names. Both tanks are in the 730 Zone. However, only the Well 13 Tank has an overflow elevation matching the 730 elevation. The Well 12 Tank overflow is at the 681 NAVD88 elevation, but is operated in conjunction with a booster pump station. There is a second smaller (60,000 gallon) tank at the Well 12 site, but it is now operated as part of the treatment facility. See Table 6-7 for more detail.

Water Distribution System

The Cascade View Zone includes distribution and transmission mains ranging in size from 2- inch to 12-inch, made primarily of asbestos cement (AC), polyvinyl-chloride (PVC), and ductile iron (DI). The oldest facilities were installed in approximately 1970. Newer pipes are all DI, with PVC used under certain specific construction circumstances. These facilities include a transmission main outside the District boundaries to connect to the Regional supply.

The Cascade View Zone includes approximately 8 percent of the District's distribution system. The majority of these water mains, approximately 73 percent, are DI. AC pipe makes up 14 percent of the system, PVC over 12 percent and the remainder is poly. See Table 6-8 for a more detailed description.

Booster Pump Stations

The Well 12 Booster Pump Station is operated in conjunction with the Well 12 Tank, to move water from the storage tank into the 730 Zone.

The NE 80th Booster Station provides a small increase in pressure from the North Regional Connection in Redmond Ridge to the District's distribution system. The Redmond Ridge and District systems both operate at the 730 Zone, but head loss through the Redmond Ridge system is enough to require use of a booster pump to bring the water into the District's system at a pressure matching that provided by the District facilities. See Table 6-9 for an overview of the District's booster pump stations.

Pressure Reducing Stations

There are five (5) pressure reducing stations in the Cascade View Zone. They allow water to flow primarily from the 730 Pressure Zone to lower zones. All of the pressure reducing stations flow to pressure zones that are only supplied by pressure reducing stations.

Three (3) supply pressure zones have only one pressure reducing station providing supply, with no redundancy. These include PRVs 37 serving the Estates at Thornbury area, 38 serving the Amesbury area, and 39 serving the Broadhurst area.

For an overview of the operational pressure reducing stations, see Table 6-10.

Control Valves

There are two control valves associated with the Cascade View Zone. Both are located at major District facilities, and their functions are described in Table 6-11.

Interties

There are two emergency interties with Union Hill Water Association, both located at the 244th Avenue NE alignment. One is at NE 52nd and the other at Union Hill Rd. Both interties take the form of a closed valve that must be manually operated. While they can provide service in either direction in an emergency, the pressure from the Union Hill Water Association would be lower than that normally provided by the District's system. Any use for a protracted period of time would require use of a booster pump system.

An emergency intertie with Ames Lake Water Association to provide back-up and peaking supply to the Ames Lake Water system is located in the vicinity of 272nd Ave NE and Union Hill Rd. For more information Table 6-13 contains an overview of the whole district's interties.

Emergency Operation Considerations

The District's Cascade View Zone also has redundancy in supply sources. Permanent on-site back-up power generation is available at the Well 12 facility, and a portable back-up generator designated for use at the Well 13 site is also housed at the Well 12 site. An additional generator connection is proposed for the NE 80th booster pump station.

6.3.2 Routine System Operation and Preventative Maintenance

Most water system tasks can be categorized as either routine operation or preventative maintenance. The District performs activities to ensure continued operations with minimal disruptions due to equipment failure. Most preventative maintenance activities take place with minimal system interruption. In addition, the system has been developed to have redundancy, so that the temporary loss of a facility does not disrupt service provision.

The District has prepared a detailed estimate of the hours for routine operations and

preventative maintenance tasks for the water operations staff. These tasks and corresponding hours are presented in Table R-1 in Appendix R. The standard operating procedures for these tasks are also included in Appendix R. There are some tasks that require major equipment be taken offline during which time the system operations may need to be modified. These are noted in the table, as extraordinary operations, and a more detailed explanation of operational considerations is provided in Table R-2 (Appendix R).

The estimated staff hours needed to complete a task are used to calculate the water operations staff FTEs required to complete the work for each task group in the table. One FTE is equal to 1,788 staff hours (260 available workdays less 15 days' vacation, 10 days sick leave, and 11.5 days of holidays).

The existing water operations system staff FTEs are presented in Table 6-2, and the estimated hours and FTEs required for the routine and preventative maintenance work is presented in Table 6-3. For comparison, the water system operations staff activities were calculated to require 11.59 FTEs, with 11.5 currently on staff. It is important to note that the totals here do not include all reactive work for unplanned situations, such as main breaks.

The information provided here is based on an average annual anticipated required work. In addition, the Operations department prepares an annual Operations Work Plan that provides a more detailed account of work required in the coming year. This allows for tracking actual hours and asset maintenance compared to labor allocations and asset maintenance targets set at the beginning of each year. Leveraging the available GIS technology with the operations work plan enables Operations Staff to see and track maintenance history of each asset and adjust future work plans accordingly.

6.3.3 Chemicals, Equipment, Supplies, and Maintenance Contractors

Table R-3 (Appendix R) provides a list of vendors the District currently uses for chemical, equipment, and part supplies and maintenance contractors.

6.4 Comprehensive Monitoring (Regulatory Compliance) Plan

6.4.1 Introduction and Approach

This section provides a review of current state and federal drinking water quality regulations pursuant to the Safe Drinking Water Act (SDWA) and an assessment of the District's regulatory compliance status based on monitoring performed and water quality data obtained for the eight-year period from 2009 to 2016. This section also summarizes recently promulgated regulations, as well as proposed and anticipated regulations over the next ten-year planning horizon, and the potential implications of each to the District. This section includes the following:

- An overview of the water system;
- A brief description of the state and federal drinking water regulatory framework;
- A description of current applicable state and federal drinking water regulations and the District's compliance status;
- A description of applicable proposed and anticipated regulations that could impact the District's system;
- Certified laboratories used for sample analyses; and
- Response procedures to customer inquiries or complaints.

6.4.2 System Overview

As of the end of 2016, the District served a population of over 62,400 within its retail service area. The water system is hydraulically grouped into two separate areas: the Plateau Zone and the Cascade View Zone. The Plateau Zone is further divided into North and South Ends. This segregation is due to the use of a 3-MG storage tank in the 700 Zone in the North End that is shared with NESSWD. Based on agreements with NESSWD (which uses unchlorinated groundwater), water supplied from the Well 4 Treatment Facility to the North End is not fluoridated, and chlorination is only provided associated with the ATEC filter system to remove iron and manganese. Throughout the remainder of its retail system, the District provides chlorination (for pre-oxidation and secondary disinfection) and fluoridation.

To meet its drinking water supply needs, the District uses groundwater supplied from 12 local wells, treated surface water purchased from Cascade and supplied through two regional connections, and two free-flowing interties with NESSWD.

The purchasing of water from Cascade was initiated in 2005. At present, this water originates primarily from the Tolt River, although it may also originate from the Cedar River. Both surface water sources are treated and supplied by Seattle Public Utilities (SPU). Cascade water reaches the District from Redmond Ridge, which enters the Cascade View Zone, and from connections from the Cascade Bellevue-Issaquah Pipeline (BIP), located in the City of Issaquah, which enters the Plateau Zone.

6.4.3 Drinking Water Regulatory Framework

Washington State drinking water suppliers are subject to both federal and state drinking water regulations. At the federal level, the SDWA (1974) and SDWA Amendments (1986 and 1996) give the United States Environmental Protection Agency (USEPA) the responsibility of developing and administering national standards for drinking water quality. The Washington State law that incorporates the SDWA and its amendments is Chapter 246-290 of the Washington Administrative Code (WAC). The Washington State Department of Health (DOH) is the primacy agency responsible for implementing and enforcing state drinking water laws.

The District is responsible for maintaining compliance with all applicable regulations for Group A public water systems. The District is required to comply with monitoring

and water quality requirements at each source entry-point (excluding interties) and within its distribution system. Cascade is responsible for ensuring that water purchased from SPU meets applicable drinking water regulations for surface water.

Because of the use of blended surface water and groundwater supplies throughout most of its retail service area, the District is considered a Subpart H system. This has implications regarding distribution system monitoring requirements.

6.4.4 Effective Drinking Water Regulations

Table 6-14 lists effective drinking water regulations that were applicable to the District during the 2009 to 2016 review period. These regulations are divided into three categories: source water and treatment; distribution system; and other. The sections that follow discuss each regulation, its relevance to the District, and the District's compliance status.

As noted previously, a portion of the District's water supply is purchased from CWA, supplied by Seattle Public Utilities (SPU). SPU is responsible for the water quality in the SPU system, and must meet federal and state drinking water regulations. A summary of SPU's Water Quality test results is reported annually in the District's Water Quality Reports (aka Consumer Confidence Reports or CCRs), available on the District's website. Additional information on SPU water quality would be obtained directly from SPU. The remainder of Section 6.4 pertains to the water quality requirements that are the District's responsibility.

Table 6-14
Applicable Safe Drinking Water Act Regulations

Name of Regulation	Parameters Regulated	Date Rules Took Effect
Source and Treatment Regulations		
Surface Water Treatment Rule	Turbidity, *Giardia lamblia*, heterotrophic bacteria, enteric viruses, *Legionella*, disinfectant residual	December 1990
Interim Enhanced Surface Water Treatment Rule	Turbidity, *Cryptosporidium*	January 2002
Long Term 2 Enhanced Surface Water Treatment Rule	*Cryptosporidium*	March 2006
Groundwater Rule	Indicators of fecal contamination	Promulgated November 2006 Effective December 2009
Phase I Rules	Volatile Organic Compounds	January 1989
Phase II, IIB and V Rules	Volatile, Inorganic and Synthetic Organic Compounds	January 1992 - 1994
Arsenic Rule	Arsenic (IOC)	January 2006
Radionuclides Rule	Combined radium, gross alpha, beta and photon emitters, and uranium (IOC)	December 2003
Unregulated Contaminant Monitoring Rule	10 parameters	2001 – 2005
Unregulated Contaminant Monitoring Rule 2	Chemical and Biological Contaminants 25 parameters	2007 - 2011 Monitoring 2008 - 2010
Unregulated Contaminant Monitoring Rule 3	Chemical and Biological Contaminants 30 parameters	2012-2016 Monitoring 2013 - 2015
Unregulated Contaminant Monitoring Rule 4	Chemical and Biological Contaminants 30 parameters	2017-2021 Monitoring 2019

Table 6-14 (cont.)
Applicable Safe Drinking Water Act Regulations

Name of Regulation	Parameters Regulated	Date Rules Took Effect
Distribution System Regulations		
Total Coliform Rule	Total and fecal coliform, *E. coli*	December 1990
Revised Total Coliform Rule/Distribution System Rule	Total coliform, fecal coliform, *E. coli*	April 2016
Lead and Copper Rule and Revisions	Lead, copper, water quality parameters	December 1992, December 2007
Stage 1 Disinfectants and Disinfection By-Products Rule	Trihalomethanes, haloacetic acids, disinfectant, total organic carbon	February 1999
Stage 2 Disinfection By-Products Rule	Trihalomethanes, haloacetic acids	March 2006
Other Regulations		
Consumer Confidence Reports	Annual report addressing drinking water quality	September 1998
Operator Certification	Minimum standards for operator certification	February 2001

6.4.5 Source and Treatment Regulations

6.4.5.1 Surface Water Treatment Rule

The Surface Water Treatment Rule (SWTR) was issued in 1989 and applies to water systems that supply and/or distribute surface water or groundwater under the direct influence of surface water (GUI). The SWTR and related rules (i.e., Interim Enhanced Surface Water Treatment Rule, Long Term 2 Enhanced Surface Water Treatment Rule) regulate turbidity, *Giardia lamblia*, *Cryptosporidium*, enteric viruses, *Legionella*, heterotrophic bacteria, and disinfectant residual levels in drinking water. For systems that purchase treated surface water, the only provisions of the SWTR that apply are those pertaining to secondary disinfection, i.e., the maintenance of a disinfectant residual of at least 0.2 mg/L at each entry-point and the presence of a detectable disinfectant residual in at least 95% of monthly distribution system water samples, including samples taken concurrently with routine and repeat total coliform samples. Alternatively, samples may be analyzed for heterotrophic bacteria using a plate count method. A

heterotrophic plate count (HPC) of 500 colony forming units (cfu) per milliliter or less is considered equivalent to a detectable disinfectant residual.

The District's Status

As a water system that purchases treated surface water from Cascade, the District is subject to the secondary disinfection requirements of the SWTR. To meet these requirements, the District began chlorinating its well sources in 2004. Hypochlorite systems are operated to ensure that the chlorine residual at each entry-point is at least 0.2 mg/L, as verified through continuous on- line monitoring. The District also monitors chlorine residual concurrent with coliform sample collection. Per its agreement with NESSWD, the 700- and associated Pressure Zones are isolated from the rest of the system (i.e., it does not use purchased surface water from the south end of the Plateau Zone) and remains undisinfected.

The District has been in compliance with the secondary disinfection requirements of the SWTR since installation and startup of the hypochlorite facilities. A review of chlorine residual data collected by the District within the distribution system indicates that all samples each month had a detectable level of chlorine residual present (i.e., chlorine residual ≥ 0.01 mg/L and/or HPC ≤ 500 cfu/mL).

6.4.5.2 Groundwater Rule

The Groundwater Rule (GWR) was promulgated on November 8, 2006 and became effective in December 2009. It applies to all public water systems that use groundwater, unless the groundwater sources are under the influence of surface water or groundwater and surface water are blended prior to treatment. The GWR contains the following primary elements:

- Sanitary surveys
- Source water monitoring
- Corrective action treatment requirements
- Public notification requirements.

Systems were required to be in compliance with all requirements except for the sanitary surveys requirement by December 1, 2009. States must have conducted the first cycle of sanitary surveys by December 31, 2012.

Further details on each primary element are below.

Sanitary Surveys

The GWR requirement for sanitary surveys builds on existing requirements related to the SWTR and related rules. However, the GWR adds requirements for frequency, scope of surveys, survey documentation, and corrective actions. DOH must conduct sanitary surveys every three years, or five years if the system meets specified performance criteria. The sanitary survey must include eight elements:

- Source
- Treatment
- Distribution system
- Finished water storage
- Pumps, pump facilities, and controls
- Monitoring, reporting, and data verification
- System management and operation
- Operator compliance with State requirements.

If DOH identifies a significant deficiency during the course of the sanitary survey, the State must notify the system within 30 days and may specify the appropriate corrective action. The system has 120 days to take the corrective action or develop a State-approved plan for being in compliance.

Source Water Monitoring

Systems which do not provide (and demonstrate via monitoring) 4-log treatment of viruses at groundwater sources may be required to conduct source water monitoring for fecal indicators. The GWR specifies two types of source monitoring: assessment monitoring and triggered monitoring. DOH may require systems to conduct assessment source water monitoring for fecal indicators on a case-by-case basis at each source. Groundwater systems will be required to conduct triggered source water monitoring within 24 hours of a positive distribution system total coliform sample to determine whether the coliform presence is due to fecal contamination of the source. Triggered monitoring requires systems to collect a source water sample from each groundwater source in use when the positive sample occurred (or at sources requested by DOH).

DOH will determine whether groundwater systems must conduct assessment source water monitoring and will specify the appropriate fecal indictor. The GWR indicates that States could require systems to monitor for *E. coli*, enterococci, or coliphage.

Corrective Action Treatment Requirements

If it is determined that a system has a significant deficiency, either through the results of a sanitary survey or source water monitoring, the system will be required to implement corrective actions. The GWR specifies that corrective actions are:

- Correct significant deficiencies
- Provide an alternative source of water
- Eliminate the source of contamination
- Provide treatment that reliably achieves at least 4-log treatment of viruses.

Public Notification Requirements

The GWR also establishes requirements for notifying the public according to the type of violation incurred by the groundwater system.

The District's Status

Sanitary Survey
The District's most recent sanitary survey was 2015. The results of that sanitary survey show that the District meets all current water quality standards and is operating with a green operating permit. There were a small number of specific points that the surveyor wanted the District to address. Those points are as follows:

SANITARY SURVEY RESULTS	
Points	Status
1. Verify that the correct treatment plant information is logged in the Sentry data system.	Completed
2. Submit a monthly distribution chlorine residual monitoring and reporting plan to DOH for systems purchasing surface water [WAC 246-290-664(6)].	Sending monthly reports to DOH including chlorine residuals taken at sample stations plus a list of wells in operation for that month.
3. Submit a monthly report with data showing that water treatment plants are operating in accordance with good operating procedures and are achieving outcomes established in DOH approved designs [WAC 246-290-110 and -415].	Completing a log each month.
4. Develop 5 talking points to highlight the Cross Connection Control program and indicate the next steps for the program	Completed
5. Develop a quarterly chlorine residual distribution profile to ensure stable residual throughout the system, and to understand baseline water quality.	Since 2017 have taken residual chlorine readings at each sample station during monthly Coliform sampling. Starting to map results.
6. Create long- and short-term plans for maintaining a stable free chlorine residual despite the shared storage tank leading to a blending of chlorinated and unchlorinated water.	Future project

The system also received the following "kudos" from the surveyor:

1. Installing radio read meters is a strong tool for water use efficiency, detecting hydraulic transients, and water quality tracking.
2. The initial E. coli response team's effective coordination with DOH in a situation where key management staff was unavailable.
3. The consolidation of the Overdale Water Association in to the District.

Source Water Monitoring
In 2017 the District updated the Coliform Monitoring Plan for samples required by the

revised Total Coliform Rule and developed the associated Triggered Groundwater Monitoring Plan as required by the Groundwater Rule requirements. Both the Coliform Monitoring Plan and Triggered Groundwater Monitoring Plan are provided in Appendix J.

Corrective Action Treatment Requirements
No significant deficiencies were identified in the District's system, so there are no corrective action requirements.

Public Notification Requirements
The required public notification activities are included in the 2017 Coliform Monitoring Plan.

6.4.5.3 Phase I, II, and V Rules (Inorganic & Organic Chemicals)

Monitoring requirements and maximum contaminant levels (MCLs) were established for volatile organic compounds (VOCs), synthetic organic compounds (SOCs), and inorganic compounds (IOCs) in the federal Organic, Synthetic Organic and Inorganic Chemicals Phases I, II and V Rules and WAC 246-290-300. These rules collectively regulate 21 VOCs, 32 SOCs, 15 primary IOCs, Arsenic, Radionuclides, and 15 secondary/unregulated inorganic and physical parameters. WAC 246-290-300 requires that these compounds be monitored at each system entry-point on 12- to 36-month sampling cycles depending on the contaminant, source type, vulnerability, and whether DOH has issued monitoring waivers.

As part of the Phase II Rule, systems with a significant amount of asbestos cement (AC) pipe must conduct periodic asbestos monitoring in the distribution system. In Washington State, DOH has historically required systems that contain more than 10% AC pipe in their distribution system to comply with the monitoring requirement. These systems must collect one sample in the distribution system at a location served by AC pipe and under conditions where asbestos contamination is most likely to occur.

The District's Status

Tables 6-15, 6-16, and 6-17 list regulated IOCs, SOCs, and VOCs that have been tested for in the District, their associated MCLs, and the range of observations for the District's groundwater entry-points for the period 2009 to 2016.

Table 6-15
Inorganic Chemicals - Regulatory Levels and District Monitoring Results (2009 to 2016)

Parameter	Units	MCL	Observed Range
EPA REGULATED			
Antimony	mg/L	0.006	<0.003
Asbestos	MFL	7	<0.115
Barium	mg/L	2.000	<0.1
Beryllium	mg/L	0.004	<0.003
Cadmium	mg/L	0.005	<0.001
Chromium	mg/L	0.100	<0.007
Copper	mg/L	1.3	< 0.02 – 0.04
Cyanide	mg/L	0.200	<0.01
Fluoride	mg/L	4.000	<0.02-1.6
Lead	mg/L	0.015	< 0.001 – < 0.01
Mercury	mg/L	0.002	<0.0002
Nitrate - N	mg/L	10.000	<2.3
Nitrite – N	mg/L	1.000	<0.1
Selenium	mg/L	0.050	<0.002
Thallium	mg/L	0.002	<0.001
Arsenic Rule			
Arsenic	mg/L	0.010	<.001-0.007
Radionuclides			
Combined Radium-226 & Radium-228	pCi/L	5	ND
Gross Alpha (excluding Radon & Uranium)	pCi/L	15	ND
EPA REGULATED (SECONDARY) Aesthetics			
Aluminum	mg/L	0.05–0.2	
Chloride	mg/L	250	4 – 13
Color	Color units	15	< 5.0
Copper	mg/L	1	< 0.02 – 0.04
Conductivity	µmhos/cm	700	116 – 315
Fluoride	mg/L	2.0 (0.7)	< 0.02 – 1.6
Foaming Agents	mg/L	0.5	
Iron	mg/L	0.3	<0.1 – 0.1
Manganese	mg/L	0.05	<0.01 – 0.12
Odor	TON	3	
pH	su	6.5-8.5	

Table 6-15 (cont.)
Inorganic Chemicals - Regulatory Levels and District Monitoring Results (2009 to 2016)

Parameter	Units	MCL	Observed Range
Silver	mg/L	0.1	<0.001 - <0.01
Sulfate	mg/L	250	< 1 – 15
Total Dissolved Solids	mg/L	500	NA
Zinc	mg/L	5	< 0.2
STATE REGULATED			
Sodium	mg/L	5 ^	5 – 28
Hardness	mg/L	10 ^	47 – 160
Turbidity	NTU	0.1 ^	< 0.1 – 0.6
Nickel	mg/L	0.005 ^	<0.005
STATE UNREGULATED			
Lead	mg/L	1 ^	< 0.001 – < 0.01
Copper	mg/L	20 ^	< 0.02 – 0.04

ND: **<**Less than detectable limits

MCL: Maximum Containment Level

^ SRL – State Reporting Limit

Table 6-16
Synthetic Organic Chemicals - Regulatory Levels and District Monitoring Results (2009 to 2016)

Parameter	Units	MCL	SRL	Observed Range
EPA REGULATED				
2,4,5 - TP (SILVEX)	µg/L	50	0.2	ND
2,4 - D	µg/L	70	0.1	ND
Alachlor	µg/L	2.0	0.2	ND
Atrazine	µg/L	3.0	0.1	ND
Benzo(A)Pyrene (PAHs)	µg/L	0.2	0.02	ND
Carbofuran	µg/L	40	0.9	ND
Chlordane (Total)	µg/L	2.0	0.2	ND
Dalapon	µg/L	200	1	ND
Di(2-Ethylhexyl) Adipate	µg/L	400.0	0.6	ND

Table 6-16 (cont.)
Synthetic Organic Chemicals - Regulatory Levels
and District Monitoring Results (2009 to 2016)

Parameter	Units	MCL	SRL	Observed Range
1,2-Dibromo-3-chloropropane (DBCP)	µg/L	0.20	0.02	ND
Di(2-Ethylhexyl)Phthalate (DEHP)	µg/L	6.0	0.6	ND
Dinoseb	µg/L	7	0.2	ND
Endrin	µg/L	2.0	0.01	ND
EDB	µg/L	0.05	0.01	ND
Heptachlor	µg/L	0.4	0.04	ND
Heptachlor Epoxide	µg/L	0.2	0.02	ND
Hexchlorobenzene	µg/L	1.0	0.1	ND
Hexachlorocyclopentadiene	µg/L	50.0	0.1	ND
Lindane (HCH Gamma)	µg/L	0.2	0.02	ND
Methoxychlor	µg/L	40.0	0.1	ND
Oxamyl	µg/L	200	2	ND
Pentachlorophenol	µg/L	1	0.04	ND
Picloram	µg/L	500	0.1	ND
Polychlorinated Biphenyls (PCB)(PCB as Total Arochlors)	µg/L	0.5	0.2	ND
Arochlor 1221	µg/L		20	ND
Arochlor 1232	µg/L		0.5	ND
Arochlor 1242	µg/L		0.3	ND
Arochlor 1248	µg/L		0.1	ND
Arochlor 1254	µg/L		0.1	ND
Arochlor 1260	µg/L		0.2	ND
Arochlor 1016	µg/L		0.08	ND
Simazine	µg/L	4.0	0.07	ND
Toxaphene	µg/L	3.0	1	ND
Aldicarb	µg/L	3	0.5	ND
Aldicarb Sulfone	µg/L	2	0.8	ND
Aldicarb Sulfoxide	µg/L	4	0.5	ND
EPA UNREGULATED				
1,2,3 - Trichloropropane	µg/L	21*	0.5	ND
2,4 - DB	µg/L		1	ND
DICAMBA	µg/L		0.2	ND

Table 6-16 (cont.)
Synthetic Organic Chemicals - Regulatory Levels and District Monitoring Results (2009 to 2016)

Parameter	Units	MCL	SRL	Observed Range
Total DCPA (DACTHAL)	µg/L			ND
Acifluorfen	µg/L		2	ND
Chloramben	µg/L		0.2	ND
DCPA Acid Metabolites (A)	µg/L		0.1	ND
3,5 - Dichlorobenzoic Acid	µg/L		0.5	ND
4 - Nitrophenol	µg/L		0.5	ND
Butachlor	µg/L		0.4	ND
Dieldrin	µg/L		0.1	ND
Metolachlor	µg/L		1	ND
Metribuzin	µg/L		0.2	ND
Propachlor	µg/L		0.1	ND
Fluorene	µg/L		0.2	ND
Bromacil	µg/L		0.2	ND
Carbaryl	µg/L		2	ND
Methomyl	µg/L		1	ND
3 - Hydroxycarbonfuran	µg/L		2	ND
STATE UNREGULATED				
2,4 - DB	µg/L		1	ND
Acifluorfen	µg/L		2	ND
DCPA Acid Metabolites (A)	µg/L		0.1	ND
3,5 - Dichlorobenzoic Acid	µg/L		0.5	ND
Dimethyl Phthalate	µg/L		0.6	ND
Heptachlor Epoxide 'A'	µg/L		0.2	ND
Acetochlor	µg/L			ND
Molinate	µg/L			ND
2,4 - Dinitrotoluene	µg/L			ND
2,6 - Dinitrotoluene	µg/L			ND
OTHER COMPOUNDS				
Baygon	µg/L		1	ND
Methiocarb	µg/L		4	ND

TT: Treatment Technique

ND: <Less than detectable limits

MCL: Maximum contaminated level

SRL: State Reporting Level

***** Not an MCL, but a State Advisory Level

Table 6-17
Volatile Organic Chemicals - Regulatory Levels and District Monitoring Results (2009 to 2016)

Parameter	Units	MCL	SRL	Observed Range
EPA REGULATED				
1,1,1 - Trichloroethane	µg/L	200	0.5	ND
1,1,2 - Trichloroethane	µg/L	5	0.5	ND
1,1 - Dichloroethylene	µg/L	7	0.5	ND
1,2,4 - Trichlorobenzene	µg/L	70	0.5	ND
1,2 - Dichloroethane	µg/L	5	0.5	ND
1,2 - Dichloropropane	µg/L	5	0.5	ND
Benzene	µg/L	5	0.5	ND
Carbon Tetrachloride	µg/L	5	0.5	ND
Chlorobenzene	µg/L	100	0.5	ND
Cis-1,2 - Dichloroethylene	µg/L	70	0.5	ND
Dichloromethane	µg/L	5	0.5	ND
Ethylbenzene	µg/L	700	0.5	ND
1,4 - Dichlorobenzene	µg/L	75	0.5	ND
1,2 - Dichlorobenzene	µg/L	600	0.5	ND
Styrene	µg/L	100	0.5	ND
Tetrachloroethylene	µg/L	5	0.5	ND
Toluene	µg/L	1000	0.5	ND
Trans-1,2 - Dichloroethylene	µg/L	100	0.5	ND
Trichloroethylene	µg/L	5	0.5	ND
Vinyl Chloride	µg/L	2	0.5	ND
Total Xylenes	µg/L	10000	0.5	ND
M/P Xylenes (MCL For Total)	µg/L		0.5	ND
O - Xylene (MCL For Total)	µg/L		0.5	ND
EPA UNREGULATED				
Chloromethane	µg/L		0.5	ND
Bromomethane	µg/L		0.5	ND
1,1 - Dichloroethane	µg/L		0.5	ND
1,1,1,2 - Tetrachloroethane	µg/L		0.5	ND
Bromobenzene	µg/L		0.5	ND
1,2,3 - Trichloropropane	µg/L		0.5	ND
O - Chlorotoluene	µg/L		0.5	ND
Fluorotrichloromethane	µg/L		0.5	ND
Bromochloromethane	µg/L		0.5	ND
1,3,5 - Trimethylbenzene	µg/L		0.5	ND

Table 6-17 (cont.)
Volatile Organic Chemicals - Regulatory Levels and District Monitoring Results (2009 to 2016)

Parameter	Units	MCL	SRL	Observed Range
1,2,4 - Trimethylbenzene	µg/L		0.5	ND
S - Butylbenzene	µg/L		0.5	ND
P - Isopropyltoluene	µg/L		0.5	ND
N - Butylbenzene	µg/L		0.5	ND
Napthalene	µg/L		0.5	ND
EDB	µg/L		0.5	ND
DBCP	µg/L		0.5	ND
Dichlorodifluoromethane	µg/L		0.5	ND
MTBE	µg/L		0.5	ND

ND: <Less Than Detectable Limits

MCL: Maximum Contaminated Level

SRL: State Reporting Level

DOH has provided the District with waivers which allow for reduced IOC monitoring at ten of the District's groundwater sources. This waiver requires only one round of IOC monitoring at each source every nine years. DOH source number S14 (Well 11.1) is required to have standard IOC monitoring, every three years. One monitoring sample for nitrate is required for each source annually. The District's monitoring results for each regulated IOC have been consistently below the MCL and the state reporting level for each parameter, and in most cases non-detect.

Ambient fluoride at the District's local wells is at trace levels as indicated by IOC sampling levels summarized in Table 6-15. The District has installed fluoridation systems at most of its local wells, providing the capacity to fluoridate all water entering the retail system that is not associated with the North End of the Plateau Zone. Target fluoride treatment concentrations are 0.7 mg/L for compatibility with fluoridated regional supply blending with local groundwater in the District system. WAC 246-290-460 was revised in 2016 to state that 0.7 mg/L as the optimal fluoride concentration where fluoridation is practiced. This concentration is consistent with Federal Department of Health and Human Services recommendations. The revised WAC also provides an operating tolerance of 0.5 to 0.9 mg/L, with action required by the purveyor when samples or measurements fall outside the operating tolerance. The WAC also includes monitoring and reporting requirements that must be followed.

Lead and copper levels shown in Table 6-15 are ambient levels associated with local source water. These levels are not regulated by the state. Values shown are not associated with monitoring for the federal Lead and Copper Rule, which requires reporting of 90th percentile values for sampling at customer taps and is discussed in its own section below.

DOH has provided the District with waivers which allow for reduced SOC monitoring. Waivers were provided for all sources for soil fumigants sampling, requiring samples every three years. Testing waivers for herbicides were provided for all sources except one, requiring testing every nine years. DOH source number S14 (Well 11.1) is required to have standard herbicide monitoring, every three years. General Pesticide sampling has also been granted waivers to three-year testing, for all sources except for S14 (Well 11.1) where only one sample is required every three years. The District's monitoring results for SOCs have been consistently below detection limits.

DOH has provided the District with waivers which allow for reduced VOC monitoring at all but one source. The District is required to perform one round of VOC monitoring every six years for all of the District's sources except S14 (Well 11.1). DOH currently requires that the district collect one VOC sample every 3 years at the S14 source. The District's monitoring results for VOCs have been consistently below the state reporting level, usually not detected, for each parameter.

6.4.5.4 Arsenic Rule

The original arsenic MCL of 0.05 mg/L was established as part of the 1975 National Interim Primary Drinking Water Regulations. After years of additional health effects research and cost/benefit analysis, the EPA published the final Arsenic Rule in January 2001 with an effective date of January 2006. The Arsenic Rule revised the arsenic MCL downward to 0.010 mg/L and identified several best available treatment technologies for compliance. As with other primary MCLs, compliance with the new arsenic MCL is based on the running annual average of results collected for each entry point to the distribution system. The rule makes arsenic monitoring requirements consistent with monitoring for other IOCs regulated under the Phase II/V standardized monitoring framework. However, if arsenic is detected above the MCL in any individual sample, the system must increase the frequency of monitoring at that sampling point to quarterly.

The District's Status

Between 2009 and 2016, the District detected the presence of arsenic at seven of its sources. Table 6-18 summarizes the observed range of arsenic concentrations along with the corresponding MCL in effect. It should be noted that these results do not reflect annual arsenic monitoring of each source. The District is required to monitor arsenic at five sources every three years, in addition to the complete IOC panel which includes arsenic. As shown in Table 6-18, there have not been any MCL exceedances during the review period. However, arsenic levels in some wells have approached the current MCL of 0.010 mg/L (10 µg/L).

The District has remained in compliance with the Arsenic Rule since it became effective in January 2006. Historical arsenic levels at Well 12R and Well 11.1 have been greater than the current MCL. The District has used well blending prior to distribution, as well as arsenic co-removal in the ATEC filter systems, to maintain compliance. In cases where blending of multiple sources is needed to reduce the finished water arsenic to below the MCL, the District should ensure that source operation includes the

appropriate controls and interlocks to achieve the requisite blend ratios.

Table 6-18
Arsenic Rule - Regulatory Levels and District Monitoring Results (2009 to 2016)

Year	MCL µg/L	CCR Level µg/L	Observed Range µg/L
2009	10	ND - 10	2 – 6
2010	10	ND - 10	<1 – 7
2011	10	ND - 10	<1
2012	10	ND - 10	1 - 4
2013	10	ND - 10	1 - 6
2014	10	ND - 10	1 - 6
2015	10	ND - 10	<1 - 6
2016	10	ND - 10	1 - 6

6.4.5.5 Radionuclides Rule

The original Radionuclides Rule became effective in 1978. The rule was revised in December 2000 with an effective date of 2003. The revised rule includes MCLs for radium-226 and radium-228, referred to as combined radium (5 pCi/L), adjusted gross alpha emitters (15 pCi/L), beta and photon emitters (4 mrem/year), and uranium (30 µg/L).

Under this rule, monitoring for radionuclides must be conducted at each entry point to the distribution system. Systems were required to conduct an initial round of monitoring between 2003 and 2007, unless earlier radionuclide data was accepted for use in grandfathering by DOH. Thereafter, the required monitoring frequency is determined by DOH and depends on system contaminant levels observed during initial monitoring. The rule allows for eliminating the analysis of radium-226 and uranium for a particular source if gross alpha results are ≤ 5 pCi/L and 15 pCi/L, respectively. Similarly, monitoring for beta and photon emitters may be waived by DOH if the system is deemed not vulnerable to these contaminants.

The District's Status

The District has collected samples from all new and proposed well sites since 1990, and also at Wells 7 and 8. Between 2001 and 2003, the District performed monitoring for gross alpha and gross beta activity at all of its well sources that were then in operation. All of these initial samples indicated non-detectable levels of these radiological parameters. In 2004, DOH established radionuclide monitoring requirements for the District which was required to collect two samples at nine sources every three years to be analyzed for radium-228. At the remaining three sources, the District was required to collected two samples every three years to be analyzed for radium-228 and gross

alpha particle activity.

DOH has most recently revised these requirements to 1 sample every six years at 11 sources. The District has maintained compliance with these monitoring requirements and associated MCLs since 2001.

6.4.5.6 Unregulated Contaminant Monitoring Rule

The USEPA issued the first Unregulated Contaminant Monitoring Rule (UCMR) in 1999. The EPA uses the UCMR to collect data for contaminants that are suspected to be present in drinking water and do not have health-based standards set under the SDWA. The UCMR requires public water systems to perform monitoring and reporting of specified contaminants to investigate their occurrence.

UCMR1
Given that its retail service population exceeds 10,000, the District was required to perform monitoring for 10 parameters included on the UCMR1 List 1. The District was not selected to conduct monitoring for List 2 parameters. Groundwater systems were required to conduct UCMR monitoring at all distribution system entry points two times during a one-year period occurring between 2001 and 2003. District results from UCMR1 sampling were all “Not Detected.”

UCMR2
In August 2005, the EPA proposed a second Unregulated Contaminant Monitoring Rule (UCMR2) that included two lists of contaminants. The rule became final in February 2007 and required public water systems serving more than 10,000 people to conduct assessment monitoring for 10 contaminants on the UCMR2 Assessment Monitoring List 1 at distribution system entry-points twice during a 12-month period between January 2008 and December 2010. Systems serving more than 100,000 people are required to conduct screening monitoring for 15 contaminants on the Screening Survey List (i.e., List 2).

Based on its retail service population of 50,000 to 60,000, the District was required to conduct monitoring for parameters on the Assessment Monitoring List 1. EPA required the District to conduct additional List 1 assessment monitoring at seven locations including five wells starting in the last quarter of 2009. Samples at six locations were required twice per year, and quarterly sampling was required from the corrosion control facility finished water line. District results from UCMR2 sampling were all “Not Detected.”

UCRM3
The third UCMR was active between 2013 and 2015 and included 30 contaminants for monitoring. The District participated in sampling for UCMR3, based on a population greater than 10,000 and less than 100,000, for the 21 UCMR3 List 1 contaminants at all entry point treatment plants. The contaminants tested for included Volatile Organic Compounds, Synthetic Organic Compounds, Metals, Chromium-6, Oxyhalide Anion and Perfluorinated Compounds. In addition, the distribution system was sampled at several

points for the metals, Chromium-6 and Oxyhalide Anion contaminants on List 1. The District did not participate in sampling for the contaminants on UCMR3 List 2 or List 3.

As a groundwater system the District was required to sample twice in one consecutive 12-month period. Quarterly samples were required at the corrosion control facility finished water line where the regional surface water enters the District's system. There were detections at certain sites for Chromium, Molybdenum, Strontium, Vanadium, Hexavalent Chromium and Chlorate. In addition, there were detections of two of the five Perfluorinated Compounds (PFAS) in the sources tested located in the Issaquah Valley Aquifer. A summary of the District results from UCMR3 are included in Appendix J.

UCMR4

UCMR 4 was published December 20, 2016 and will run from 2018 to 2020 and includes a list of 30 contaminants to monitor.

The District's Status

The District participated in the UCMR1, UCMR2 and UCMR3 efforts, sampling and testing for the parameters designated for the District by EPA.

The District has remained compliant with all UCMR monitoring requirements and has added monitoring for Per- and Polyfluoroaklyl Substances (PFAS) based on detections in the Issaquah Valley Aquifer. PFAS were included in the UCMR3 sampling tests.

<u>Per- and Polyfluoroalkyl Substances (PFAS) – UCMR3 Sampling</u>

Per- and Polyfluoroalkyl Substances (PFASs): PFASs are a group of fluorinated chemicals that have been manufactured since the 1950s, for a variety of consumer products as well as for use in firefighting foams. Most of the study regarding presence of the chemicals in the environment and in human bodies has been focused on two of these chemicals: perfluorooctanesulfonic acid (PFOS) and perfluorooctanoic acid (PFOA). These are the two chemicals in this class that have been found most frequently in the environment and in the human body.

The EPA has established drinking water health advisories for combined PFOS and PFOA, based on lifetime exposure from multiple sources, including drinking water. The advisories are not national primary drinking water regulations, but PFOS and PFOA are in the Safe Drinking Water Act process of being evaluated for potential regulation.

Samples from the District's sources were analyzed for PFOS and PFOA, along with other per- and poly-fluorinated compounds for the UCMR3. All results from this sampling effort were below the minimum reporting levels for both PFOS (0.04 µg/L) and PFOA (0.02 µg/L). The health advisory level for the combined concentrations of PFOS and PFOA is 0.07 µg/L, so the District's source waters are below the health advisory level issued by EPA.

The City of Issaquah also analyzed water from their groundwater sources under UCMR3

and did have detections of PFASs above the health advisory limit. The City of Issaquah has implemented treatment within their water system.

Since Issaquah and the District share a common aquifer, to respond to these PFAS detections the District has: 1) updated the District's Lower Issaquah Valley Aquifer (LIVA) groundwater model; 2) developed a monitoring program to provide the District with information regarding the movement of PFASs in the LIVA, 3) changed source production practices to blend regional and groundwater supply to achieve non-detection of PFOS and PFOA in finished water samples, and 4) requested changes to District water rights to allow modified use of Wells 7, 8 and 9. As noted previously, in 2017 the DOE provided a Temporary Change authorizing Well 9 as a Temporary Additional Point of Withdrawal to the Wells 7 and 8 year-round water rights, and the District is applying to DOE to make this a permanent change. Additional information on the District's PFAS related activities is included in Chapter 5.

6.4.6 Distribution System Regulations

The Revised Total Coliform, Stage 1 Disinfectant/Disinfection By-Products, Stage 2 Disinfection By-Products Rule, and Lead and Copper Rule apply primarily to the quality of drinking water in the distribution system. These regulations establish monitoring requirements, MCLs, Maximum Residual Disinfectant Levels (MRDLs), and Action Levels for regulated parameters.

6.4.6.1 Total Coliform Rule

The Revised Total Coliform Rule (RTCR) requires water systems to monitor their distribution system for the presence of coliform bacteria, a surrogate used to indicate possible contamination of fecal origin. Routine monitoring is required at representative distribution system sites on a monthly basis, with the sample quantity dependent on the retail population served. All samples testing positive for total coliform must be followed by repeat sampling and additional testing to determine if fecal coliform and/or *E. coli* are present.

Under the RTCR, there are two types of violations: acute and non-acute. An acute MCL violation for coliform is based on the presence of either fecal coliform or *E. coli* in a repeat sample, or coliform presence in a repeat sample collected as a follow-up to a sample indicating the presence of fecal coliform or *E. coli*. A non-acute MCL violation for coliform occurs under when a water system that collects ≥ 40 routine coliform samples per month has more than 5% of the samples test positive for the presence of total coliform.

The District's Status

The District uses 70 different sample sites and collects 70 total coliform samples throughout the distribution system per month. The District's current RTCR monitoring plan has been prepared as required by WAC 246-290 and is included in Appendix J. This plan

is used to present information on sample sites, number of samples collected, sampling frequency and schedule, repeat sample locations, and public notification procedures. The current RTCR Monitoring Plan was last revised November 2017 and contains the District's *E. coli*-Present Response plan. This plan outlines the District's response to tests which show positive for *E. coli*. The specific sampling locations and schedule are provided in Section 6.4.6.12 Bacteriological Monitoring Plan.

Note that since the District adopted the RTCR Monitoring Plan, included in Appendix J, there have been terminology changes. The District's RTCR Monitoring Plan is being updated to reflect the latest terminology and format of the RTCR.

6.4.6.2 Stage 1 Disinfectant/Disinfection By-Products Rule

Disinfection by-products (DBPs) result from the reaction of natural organic matter (NOM) and various inorganic precursors with chemical disinfectants. Toxicological research has shown that many DBPs have carcinogenic and other adverse properties when ingested over long periods of time. In 1979, the EPA enacted the Total Trihalomethane Rule, which set an interim MCL for total trihalomethanes (TTHM) of 0.1 mg/L as a running annual system-wide average based on quarterly monitoring within the distribution system. This rule applied to water systems using a chemical disinfectant and serving over 10,000 customers.

In 1998, the EPA promulgated the Stage 1 Disinfectants/Disinfection By-Products (D/DBP) Rule to further reduce the DBP levels in drinking water. The Stage 1 D/DBP Rule, which applies to all community water systems that apply a primary or secondary chemical disinfectant to their water supply, became effective in January 2002 for systems serving 10,000 or more people.

The Stage 1 D/DBP Rule lowered the MCL for TTHM to 0.080 mg/L, established an MCL of 0.060 mg/L for five haloacetic acids (HAA5), established a maximum residual disinfection level (MRDL) of 4.0 mg/L for chlorine residual, and established other requirements not currently applicable to the District.

The Stage 1 D/DBP Rule also established new monitoring requirements to ensure compliance with these standards. For chlorinated Subpart H systems that serve over 10,000 people, the Stage 1 D/DBP Rule requires the collection of four paired TTHM and HAA5 samples per treatment plant from the distribution system each quarter. Compliance with the MCLs was based on the system-wide running annual average (RAA) of quarterly results. At least 25% of the samples collected each quarter must be from locations representing maximum residence time in the system. The remaining samples must be taken at locations representing average residence time and providing thorough spatial coverage. The rule allowed reduced monitoring if the RAA of TTHM and HAA5 levels drop below 0.04 mg/L and 0.03 mg/L, respectively, over a 12-month sampling period. Reduced monitoring requires the collection of one paired TTHM and HAA5 sample per quarter per treatment plant collected from the location of maximum residence time.

Compliance with the chlorine MRDL is based on the RAA, computed quarterly, of the monthly average based on all chlorine residual measurements collected from the distribution system.

The District's Status

The District developed a Stage 1 D/DBP Rule Monitoring Plan and began compliance monitoring during the third quarter of 2005 (following implementation of permanent chlorination of its well sources). In its Monitoring Plan, the District identified three distinct treatment plants, based on aquifer characteristics and blending of sources prior to entering the distribution system. To meet the Stage 1 D/DBP Rule requirements, the District collected thirteen DBP samples within the distribution system each quarter, distributed appropriately between average and maximum residence time locations. In November 2006, DOH granted the District approval for reduced monitoring.

The District collected three DBP samples per quarter (i.e., one per plant, at the respective maximum residence time location). The District continued monitoring at these locations until Stage 2 DBP monitoring locations took effect in May 2012. Table 6-19 summarizes the results of the District's Stage 1 DBP monitoring. Since initiating monitoring in August 2005, the District has been in compliance with Stage 1 D/DBP Rule.

Table 6-19
Stage 1 D/DBP Rule - Regulatory Levels and District Monitoring Results (2009 to 2012)

Parameter	Units	MCL	RAA 2009	RAA 2010	RAA 2011	RAA 2012
TTHM	µg/L	80	18.9	18.9	19.9	19.84
HAA5	µg/L	60	7.8	7.9	14.9	14.72

6.4.6.3 Stage 2 Disinfection By-Products Rule

The Stage 2 DBP Rule was proposed in August 2003 as part of the Stage 2 M/DBP cluster. The final rule was promulgated concurrently with the LT2ESWTR in January 2006 and became effective in March 2006. The Stage 2 DBP rule built upon the public health protection offered by the Stage 1 D/DBP Rule by providing more equitable protection from DBP exposure across the entire distribution system and by focusing on the reduction of DBP peaks. The Stage 2 DBP Rule applies to water systems that use or receive water with a primary or secondary chemical disinfectant.

The Stage 2 DBP Rule did not add to the list of DBPs being regulated, nor did it reduce the MCLs for TTHM or HAA5. Rather, the rule changed the compliance determination from that of a system-wide RAA approach (as used in the Stage 1 D/DBPR) to that of location-specific running annual average (LRAA) approach. For compliance under the Stage 2 DBP Rule, the MCLs must be met at each monitoring location based on the LRAA of quarterly results. The Stage 2 DBP Rule also redefined the number of samples;

with the monitoring requirements based on retail service population, not the number of treatment plants.

Compliance monitoring sites for the Stage 2 DBP Rule were determined through an Initial Distribution System Evaluation (IDSE). The purpose of the IDSE is to identify high TTHM and HAA5 sites. Two approaches are available – a Standard Monitoring Program (SMP) or a System-Specific Study (SSS). Systems may receive an exemption from the IDSE based on 40/30 Certification if 2 years of eligible DBP data can be provided that show all individual TTHM and HAA5 results are below 40 µg/L and 30 µg/L, respectively.

Consecutive systems that purchase drinking water carrying a disinfectant are required to implement Stage 2 DBP requirements on the same schedule as the largest water system in their combined distribution system.

The District's Status

The District is considered to be a Schedule 1 system because it is in a combined distribution system with City of Seattle. As a Schedule 1 system, the District was required to develop and submit either an IDSE Plan or 40/30 Certification to EPA complete by October 1, 2006. The District's initial submittal of the IDSE Plan was on September 27, 2006, with final submittal on February 15, 2007. The EPA approved the Plan on February 20, 2007.

Upon the completion of SMP monitoring, the District developed an IDSE Report that included the proposed Stage 2 DBP monitoring locations. The monitoring report was submitted December 30, 2008.

For Subpart H systems with a retail service population between 50,000 and 249,999, the Stage 2 DBP Rule requires monitoring at 8 locations per quarter, allocated as follows:

- 3 sites at the maximum TTHM locations
- 3 sites at the maximum HAA5 location
- 2 sites at existing Stage 1 D/DBP Rule compliance locations

For the District, the routine monitoring requirements of the Stage 2 DBP Rule took effect in May 2012. At that time the District began monitoring at the Stage 2 locations.

The District has been sampling and testing consistent with the sampling plan meeting the requirements of the Stage 2 DBP since 2012. Through December 2017, there have been no exceedances of the MCLs under the Stage 2 DBP rule. The Stage 2 D/DBP Rule results for 2013 through 2017 are provided in Table 6-20.

Table 6-20
Stage 2 D/DBP Rule - Regulatory Levels and District Monitoring Results (2013 to 2017)

Site	TTHM – MCL = 80 µg/L									
	2013		2014		2015		2016		2017	
	LRAA	Max	LRAA	Max	LRAA	Max	LRAA	Max	LRAA	Max
PLATEAU ZONE										
31	7.59	13.7	8.75	12.9	14.13	21.2	9.72	13.48	12.4	22.5
33	9.2	15.7	10.95	15.5	18.38	36.4	13.29	27.54	9.3	12.2
48	14.43	18.4	11.78	14.4	17.35	20.1	17.02	21.39	13.55	21.2
63	26.6	42.3	20.23	26.8	32.15	50.2	24.09	30.97	32.58	41.4
Average	14.45		12.93		20.50		16.03		16.96	
CASCADE VIEW										
2	9.43	12.1	8.8	20.4	16.73	44	8.89	15.31	10.1	14.8
3	20.28	31.8	14.4	23.1	23.03	44.4	18.18	29.54	19.78	34.2
62	25.2	35.4	33.73	50.1	51.65	73.1	27.41	32.40	30.33	53.2
64	13.08	15.9	13.5	19	22.55	42.2	13.03	17.07	12.33	14.1
Average	17		17.61		28.49		16.88		18.13	
Site	**HAA5 – MCL = 60 µg/L**									
	2013		**2014**		**2015**		**2016**		**2017**	
	LRAA	**Max**	**LRAA**	**Max**	**LRAA**	**Max**	**LRAA**	**Max**	**LRAA**	**Max**
PLATEAU ZONE										
31	8.66	12.3	17.18	27.8	19.65	27	11.38	19.15	17.15	27.3
33	9.41	13.8	16.88	25.4	18.50	26.2	12.91	26	12.8	15.1
48	6.95	9.05	9.68	14	8.1	11.9	7.53	9.43	10.18	15.1
63	33.08	45.2	30.93	40.8	39.50	62.3	25.79	30.55	39.35	49.9
Average	14.52		**18.66**		21.44		14.40		**19.87**	
CASCADE VIEW										
2	5.41	6.31	4.6	6.4	9.73	25.1	4.93	7.18	5.83	9.3
3	17.39	30.3	7.63	17.3	11.88	24.1	9.08	15.56	13.28	31.6
62	27.9	35.8	31.93	49.8	32.05	35.6	27.41	32.4	29.33	45.3
64	4.67	6.97	5.58	7.7	11.23	27.3	6.02	7.83	5.9	7.5
Average	13.84		12.43		16.22		11.86		**13.58**	

TTHM = Total Trihalomethanes
HAA5 = Haleoacetic Acids
LRAA = Localized Running Annual Average

6.4.6.4 Lead and Copper Rule

Lead and copper are heavy metals that may be found in household plumbing materials and water service lines. Lead can cause a variety of adverse health impacts, including delaying physical and mental development in infants and children. Copper can cause aesthetic issues in addition to short-term and long-term negative health impacts. The Lead and Copper Rule (LCR) establishes monitoring requirements, action levels, and compliance requirements to control the levels of these metals at customers' taps.

Under the LCR, water systems are required to perform monitoring of standing water samples at customer taps to determine if more than 10% of homes that meet certain criteria exceed the lead and copper action levels of 0.015 mg/L and 1.3 mg/L, respectively. If these action levels cannot be met, systems must implement public

education and a corrosion control treatment strategy for meeting these levels.

In 2004, the EPA initiated a review of LCR implementation across the nation. This effort was focused on determining whether national lead levels are increasing. As a result of this effort, the EPA identified several targeted changes for improving implementation of the LCR. These revisions, which became effective in December 2007, intended to enhance LCR implementation in the areas of monitoring, treatment, customer awareness, and lead service line replacement.

Additionally, these short-term revisions focus on improving compliance with public education requirements to ensure that consumers receive meaningful and timely information that assists in limiting exposure to lead in drinking water. Table 6-21 provides a summary of the LCR revisions.

Table 6-21
Lead and Copper Rule Revisions, 2007

Activity	Rule Revision
Monitoring	• Clarify language in the rule regarding the number of samples required and the number of sites from which samples should be collected. • Modify definitions for monitoring and compliance periods to make it clear that all samples must be taken in the same calendar year. • Clarify the reduced monitoring criteria that would prevent small and medium water systems above the lead action level or large systems deemed to no longer meet Optimum Corrosion Control Treatment from remaining on a reduced monitoring schedule.
Treatment or Source Water Changes	• Require water systems to provide advanced notification to the primacy agency of intended changes in treatment or source water that could impact long-term water quality. • The primacy agency must approve the planned changes using a process that will allow the states and water systems to take as much time as needed for systems and states to consult about potential problems.

Table 6-21 (cont.)
Lead and Copper Rule Revisions, 2007

Activity	Rule Revision
Customer Awareness and Public Education	• Require utilities to provide a notification of tap water monitoring results for lead to owners and/or occupants of homes and buildings that are part of the utility's sampling program. • Changes to the content, delivery, and time frame of public education regarding lead action level exceedances. Systems must partner with additional organizations to disseminate the message to at-risk populations. • Requires educational statements about lead in drinking water to be included in all Consumer Confidence Reports.
Lead Service Line Replacement	• Require utilities to reconsider previously "tested-out" lead service lines when resuming lead service line replacement programs.

The Washington State Board of Health adopted revisions to WAC 246-366 which included a section requiring lead testing in primary and secondary schools, but the testing has not been funded by the legislature, so the rule has not taken effect. This does not impact the District, but the District should be aware of the attention to lead is receiving in schools.

In addition to the EPA rules and potential revisions, Washington State Governor Inslee issued the Governor's Directive 16-06 on May 2, 2016 regarding assisting community and agency responses to lead in water systems. The section of the directive that could directly impact the District is section 6, which reads in part:

> *DOH shall prioritize the removal of lead service lines and other lead components in water distribution systems when considering a funding proposal through the Drinking Water State Revolving Fund … As part of this effort, DOH shall work with stakeholder groups to develop policy and budgetary proposals with a goal of removing all lead service lines and lead components in Group A Public Water drinking systems within 15 years. DOH shall work with each Group A Public Water system to identify all lead service lines and lead components within two years.*

The District is not aware of any lead service lines in the District's water system, so none have been formally identified.

The District's Status

The District performs at-the-tap monitoring for lead and copper as outlined in its Lead and Copper Rule Monitoring Plan. The District currently collects samples from 30 homes, with a monitoring frequency of once every three years. The 90th percentile results from

each of these rounds are summarized in Table 6-22. The District has consistently maintained compliance with lead and copper action levels and the broader monitoring and notification requirements of the LCR. The Lead and Copper Rule Monitoring Plan is more fully detailed in section 6.4.11.4.

Table 6-22

Lead and Copper - Regulatory Levels and District Monitoring Results (2010, 2013 and 2016)

			90th Percentile Results		
Parameter	**Units**	**Action Level**	**2010**	**2013**	**2016**
Lead	ppb	15	2	2	2
Copper	ppm	1.3	<0.1	0.1	0.1

6.4.7 Other Regulations

6.4.7.1 Consumer Confidence Reports and Public Notification Rule

Under the Consumer Confidence Report (CCR) Rule promulgated in 1998, water systems are required to provide an annual CCR on the source of their drinking water and levels of any contaminants found. The annual report must be supplied to all customers and must include the following:

- Information on the source of drinking water;
- A brief definition of terms;
- If regulated contaminants are detected, the MCLG, MCL, and the level detected;
- If an MCL is violated, information on health effects;
- If USEPA requires it, information on levels of unregulated contaminants; and
- Minimum requirements of the contents of the report per WAC 246-290-72001.

While the CCR provides annual “state-of-the-water” reports, the Public Notification Rule (PNR) directs utilities in notifying customers of acute violations when they occur. The PNR was revised in May 2000 and outlines public notification requirements for violations of MCLs, treatment techniques, testing procedures, monitoring requirements, and violations of a variance or exemption. If violations have the potential for “serious adverse effect,” consumers and the State must be notified within 24 hours of the violation. The notice must explain the violation, potential health effects, corrective actions, and whether consumers need to use an alternate water source. Notice must be made by appropriate media or posted door-to-door. Less serious violations must be reported to consumers within 30 days, in an annual report, or by mail or direct delivery service within 1 year depending on the severity of the violation.

The District’s Status

The District is in compliance with these requirements. The District has provided a copy of

the CCR to its customers prior to July 1 of each year. A copy of the District's CCR is available online at www.spwater.org, under menu item *Your Water,* and *Annual Drinking Water Reports*.

6.4.7.2 Operator Certification

The 1996 amendments to the SDWA require that states develop and implement an operator certification program. The regulation sets out minimum guidelines for such a certification program including operator classification and qualifications. These sections require that:

- Each treatment facility and/or distribution system be placed under the direct supervision of a certified operator
- Operator certification must be equal to or greater than the system classification being operated
- All process control personnel must be certified
- At least one certified operator be available on every shift
- Operators must sit for, and pass, a validated exam demonstrating skills, knowledge, ability, and judgment necessary for the system classification
- Each operator has a high school diploma, a General Educational Development (GED) degree, or state-approved experience and training.

While the responsibility for developing the program lies with DOH, systems such as the District is required to bring all operators up to the required level of certification.

The District's Status

The District satisfies USEPA and DOH operator certification requirements. As discussed in Section 6.2, all water system managers, supervisors, and water operators have the appropriate level of state certification.

6.4.8 Recently Promulgated and Anticipated Drinking Water Regulations

New drinking water regulations have been promulgated that will have a direct impact on the District. Additional applicable regulations are anticipated over the next several years. Table 6-23 summarizes these recent and anticipated future regulations, including regulated parameters and schedule for each. For anticipated regulations, it is important that the District keep track of any developments.

Table 6-23
Recently Promulgated and Anticipated Regulations Under the Safe Drinking Water Act

Rule	Parameters Regulated	Effective Date
Unregulated Contaminant Monitoring Rule 4	Chemical and Biological Contaminants	Monitoring 2018 - 2020
Lead and Copper Rule Revisions	Lead and Copper	February 2020
Perchlorate	Perchlorate	Process to develop a national primary drinking water regulation has been initiated

In addition, the District can track potential regulations by keeping up-to-date with the Contaminant Candidate List, which is the primary source used by the USEPA for establishing priority contaminants that may face future regulation. The EPA has issued non-enforceable health advisories for the following compounds from the Contaminant Candidate List:

6.4.8.1 Unregulated Contaminant Monitoring Rule 4

The fourth Unregulated Contaminant Monitoring Rule (UCMR4) was published in 2016, with monitoring to occur from 2018 to 2020. UCMR4 includes 30 chemical contaminants with 10 cyanotoxins and 20 additional contaminants. All analyses are to be conducted by laboratories that are EPA approved for the contaminants in consideration.

The District's Status

The District will participate in the fourth UCMR, monitoring 30 contaminants, scheduled for 2019.

6.4.8.2 Lead and Copper Rule Long Term Revisions

EPA is considering Long-Term Revisions to the LCR, in part as a result of the lead crises in Flint, Michigan and subsequent national attention. A Lead and Copper Rule Revisions White Paper was published by EPA in October 2016.

A proposed rule is currently being developed according to the EPA's regulatory agenda, with the final rule scheduled for February 2020.

A range of revisions to the rule are under consideration according to the EPA white paper, summarized as follows:

- Increasing the rate of replacement of lead service lines (including those not owned by the public water system), by requiring programs that target service line replacement. This is a complicated issue due to access, ownership, costs, and implementation schedules, so it is difficult at this time to predict how the LCR will be specifically revised to address it. The impact to the District's responsibilities and budget are also unknown at this time, though there is likely to be a significant consumer education effort involved.
- Improving optimal corrosion control treatment requirements, by implementing a number of changes to current requirements for assessing optimization. Changes could include increasing the frequency requirements for monitoring water treatment objective parameters, as well as periodic re-evaluation of corrosion control strategies. Changes affecting water providers would be implemented after the EPA issues new guidance documents for corrosion control technology selection.
- Establishment of a "Household Action Level" as a health-based benchmark to help inform the public about risks and help to prioritize mitigation efforts for various populations and risk groups. The household action level is not anticipated to replace the lead and copper action levels in the current LCR or replace the role of the current action levels.
- Consideration of point-of-use filters as a potential tool to address household level risks, potentially including exceedances of health-based benchmarks and to mitigate possible effects of disturbances to lead service lines.
- Changes and clarifications to sampling requirements, to incorporate previously issued sampling procedures recommendations. The sampling changes proposed for the LCR are in part to reinforce recommended practices to the primacy agencies (Washington Department of Health), but also to establish and develop additional data about water system-wide effectiveness of corrosion control strategies. Some of these changes may have minor budgetary impacts. Changes are likely to include:
    - Continued use of "first-draw" tap samples, with specific requirements regarding "first-draw", and potentially provisions to allow systems to sample customer's taps on request.
    - Mandatory sampling of schools that are not public water systems, given the presence of vulnerable populations and ongoing challenges schools continue to encounter with elevated lead in drinking water.
    - Encouraging partnerships with EPA in the development of real-time monitoring for water quality parameters measuring the effectiveness of corrosion control in the distribution system.
- Increasing transparency and information sharing by incorporating in the transparency and public access recommendations EPA issued in the wake of the lead crises in Flint, MI. These recommendations include enhancing requirements for water utilities for providing information to customers, including:
    - Clearly posting all LCR sampling results on a publicly accessible website that protects the privacy of the customers,
    - Shortening the time frames for reporting lead sample results to customers,

    - Shortening the time frame for providing public health education when high lead levels are detected,
    - Enhancing requirements for sharing results of materials evaluations, including publicly identifying the locations of lead service lines.
    - Enhancing requirements for the State agency to publicly identify water systems that have had an action level event, as well as requiring specific steps the system must take, and requiring specific progress in implementing those requirements,
    - Requiring systems to provide information on LCR sampling, such as number of tap samples, number of samples exceeding the lead action level, and to provide customers with information about voluntary sample results, and any changes to water quality parameters that might affect lead in their water,
    - Requiring timely electronic reporting of sampling results to primacy agencies (DOH) and EPA.
- Improving public education requirements, to better inform customers, potential new customers, and the public about potential risks of lead in drinking water. New requirements could include specific outreach efforts regarding lead service lines, updated health statements, and expanded outreach to customers with vulnerable populations, such as caregivers and health care professionals. Public education requirements are likely to be revised to be a continuous, proactive, targeted effort to help consumers take action to reduce lead exposure regardless of whether or not action levels have been exceeded.
- Targeted outreach for customers served by lead service lines may also become part of the revised rule.
- Revisions to identify copper corrosion where action levels have not been exceeded are also under consideration for the rule revisions. These could include requirements by the water system to demonstrate the water is not corrosive to copper at multiple locations in the distributions system. The rule could be revised to assist this effort by prompting EPA to develop water quality parameter criteria to aid in assessing copper aggressiveness. Depending on how aggressive the water is to copper, sample location selection and sample frequency requirements may be adjusted in the revised rule.

As mentioned previously, in addition to the EPA rules and potential revisions, the Washington State Board of Health adopted revisions to WAC 246-366 which included a section requiring lead testing in primary and secondary schools, but the testing has not been funded by the legislature, so the rule has not taken effect.

The District's Status

The District has implemented the 2007 recommendations from EPA to comply with short term revisions for the LCR and is therefore well positioned to be in compliance with the long-term revisions when issued.

With respect to lead in schools, the rules do not directly impact the District, but the District should be aware of the potential water quality testing that may occur. As a side note, most

of the older public school buildings in the District's service area have or are being replaced, which will limit the likelihood of lead being found.

6.4.8.3 Perchlorate

Perchlorate is a persistent naturally occurring and man-made anion. Manufactured forms of perchlorate include perchloric acid and salts of ammonium, sodium, and potassium, and is commonly used as an oxidizer in solid propellants, munitions, fireworks, and other products. EPA determined by 2012 that perchlorate is appropriate for regulation under the safe drinking water act. Perchlorate can disrupt the normal function of the thyroid gland. The EPA is in the process of proposing a national primary drinking water regulation. An interim Lifetime Drinking Water Health Advisory (non-enforceable) is 15 μg/L).

The District's Status

At this time the District is simply monitoring the development of the Perchlorate Rule.

6.4.9 Certified Laboratories Used for Sample Analyses

The District uses four laboratories to perform water quality testing. The laboratories and their associated contact information are provided below. Each of these laboratories is USEPA and/or DOH-certified for the analysis assigned to it.

Water Management Laboratories
1515 80th St. E
Tacoma, WA 98404
Phone: 253-531-3121

AMTest Laboratories
13600 NE 126th Place, Suite C
Kirkland, WA 98034
Phone: 425-885-1664

City of Seattle Public Utilities
800 S Stacy St
Seattle, WA 98134
Phone: 206-684-7880

State of Washington
Department of Health
1610 NE 150 St.
PO Box 550501
Shoreline, WA 98155-9701
Phone: 206-361-2896

6.4.10 Response to Customer Inquiries and Complaints

Section 6.8 describes how the District responds to customer inquiries and complaints, including those related to water quality issues.

6.4.11 Summary of Regulatory Status

Table 6-24 summarizes the District's regulatory status from 2009 to 2016, including regulatory requirements and recommendations for continued compliance.

Table 6-24
Summary of Applicable Regulations and Compliance Status

Regulation	***Applicable Requirements***	***Status***	***In Compliance?***	***Future Actions***
Surface Water Treatment Rule	Monitor chlorine residual throughout the dist. system.	Began disinfection of well sources in 2004	Yes	Continue monitoring as required
Phase I, II, V Rules	Monitor finished water for IOCs, SOCs, and VOCs, and meet MCLs. Monitor distribution system for asbestos.	No MCL violations occurred between 2009 and 2016	Yes	A document to track monitoring requirements to prevent future violations is in development
Arsenic Rule	Monitor finished water for arsenic and meet MCL.	Arsenic was detected, though MCL has not been exceeded.	Yes	Increase monitoring and determine if further action is needed to prevent MCL violations.
Radionuclides Rule	Monitor for regulated radionuclides.	Not detected between 2009 and 2016	Yes	Continue monitoring as required by DOH.

Table 6-24 (cont.)
Summary of Applicable Regulations and Compliance Status

Regulation	***Applicable Requirements***	***Status***	***In Compliance?***	***Future Actions***
Unregulated Contaminant Monitoring Rule	Monitor for listed contaminants under UCMR1, UCMR2, UCMR3, UCMR4.	UCMR4 monitoring starts 2018	Yes	The District's first year of required monitoring for UCMR 4 is 2019 Continue monitoring as required
Revised Total Coliform Rule	Maintain written TCR plan; perform distribution system monitoring; meet MCL.	Coliform Monitoring Plan updated in 2017 Triggered GW Monitoring Plan created in 2017	Yes.	Continue monitoring as required
Stage 1 D/DBP Rule	Maintain written plan; perform distribution system monitoring; meet MCLs.	DBP levels below MCL	Yes	Stage 1 monitoring has been completed
Stage 2 DBP Rule	Prepare IDSE Plan and Report; perform distribution system monitoring; meet MCLs.	DBP levels below MCL	Yes	IDSE Report developed. Continue monitoring as required.
Groundwater Rule	Sanitary surveys; source water monitoring	Last Sanitary Survey completed in 2015	Yes	Continue monitoring as required.

Table 6-24 (cont.)
Summary of Applicable Regulations and Compliance Status

Regulation	*Applicable Requirements*	*Status*	*In Compliance?*	*Future Actions*
Lead and Copper Rule	Maintain written plan; perform monitoring; and meet Action Levels.	Lead and copper levels below Action Levels.	Yes	Continue monitoring as required.
CCR and PNR	Distribute annual reports.	Annual CCR provided to customers.	Yes	Continue providing customers with CCR prior to each July 1.

6.4.11.1 Monitoring Plans

Water quality monitoring requirements for groundwater, surface water, and combined source systems were discussed in the previous subsections. The monitoring programs are described below. The complete water quality monitoring plans are provided in Appendix J.

In 2015 the District developed a Surveillance Monitoring Program with Confluence to collect information about water quality conditions throughout the distribution system. The data to be collected was not compliance-based. The goal was to enhance the District's understanding of baseline water quality conditions. Objectives described in the Monitoring Program are:

1. Develop baseline data to help District staff better understand prevailing conditions within the distribution system.
2. Provide a basis for developing water quality goals within the District's distribution system.
3. Provide a tool to allow water quality data to be evaluated and assessed and to potentially provide an early-warning of water quality upsets.
4. Provide a source of up-to-date water quality information to be considered by District staff for CIP planning, operations, and maintenance activities.
5. Gather the necessary information to target water quality concerns identified while carrying out this effort.
6. Gather the necessary information to develop a long-term, on-going water quality surveillance monitoring plan.

A follow-up review of water quality data collected from February to October of 2016 per the Surveillance Monitoring Program was provided, with recommendations for further work to develop a more robust understanding of water quality within the District's distribution system.

6.4.11.2 Bacteriological Monitoring Plan

The District's bacteriological monitoring plan, updated in 2017 as the coordinated Coliform Monitoring Plan and Triggered Ground Water Monitoring Plan, is in accordance with WAC 246-290-300 monitoring requirements. Based on the District's population served and Table 2 of WAC 246- 290-300, 70 samples are required. The District currently collects the required 70 samples throughout each month, and the samples are tested at certified laboratories. The number of samples will be increased when the District's population reaches 70,001.

The sample locations have been divided into four groups. Each group is scheduled for collection during a specific week of the month. The samples in each group are geographically distributed across the entire District, thus each week's sample group represents a cross-section of the District.

The sample locations are listed in Table 6-25 and depicted in Figure 6-2. The colors in the table and on the figure denote the week for the sample location. All routine sample sites are dedicated sample stands. Repeat sites are at customer hose bibs. The Groundwater Sources for Triggered Sample Sites also includes the interties to the regional water system, identified as either CWA North Intertie or CWA South Intertie. The interties are not required to be monitored per the Ground Water Rule, but the District chooses to include samples at these sources for completeness of water supply source information.

Table 6-25
Monthly Bacteriological Monitoring Locations

Routine, Repeat and Triggered Source Sample Locations and Weekly Rotation Schedule						
Week		**ID No.**	**Routine Sample Site Location**	**Upstream Repeat Site**	**Downstream Repeat Site**	**Groundwater Sources for Triggered Sample Sites**
	1	3	25920 NE 29th Pl	25906 NE 29th Pl	25936 NE 29th Pl	Well 12 (S16), Well 13 (S24), CWA North Intertie (S19)
	1	6	1639 209th Pl NE	1651 209th Pl NE	1633 209th Pl NE	Well 1 (SO1), Well 2.1/2.2 (S18), Well 4 (S17), Well 7 (S06), Well 8 (S07), Well 9 (S13), Well 10 (S11), Well 11.1 (S14), Well 11.2 (S12), CWA South Intertie (S19)
	1	7	22202 NE 12th Pl	1139 NE 22nd Pl	22212 NE 12th Pl	Well 1 (SO1), Well 2.1/2.2 (S18), Well 4 (S17), Well 7 (S06), Well 8 (S07), Well 9 (S13), Well 10 (S11), Well 11.1 (S14), Well 11.2 (S12), CWA South Intertie (S19)

Table 6-25 (cont.)
Monthly Bacteriological Monitoring Locations

Routine, Repeat and Triggered Source Sample Locations and Weekly Rotation Schedule						
Week		ID No.	Routine Sample Site Location	Upstream Repeat Site	Downstream Repeat Site	Groundwater Sources for Triggered Sample Sites
	1	11	407 238th Ave NE	421 238th Ave NE	408 238th Ave NE	Well 1 (SO1), Well 2.1/2.2 (S18), Well 4 (S17), Well 7 (S06), Well 8 (S07), Well 9 (S13), Well 10 (S11), Well 11.1 (S14), Well 11.2 (S12), CWA South Intertie (S19)
	1	21	19605 SE 23rd St	19615 SE 23rd St	19543 SE 23rd St	Well 1 (SO1), Well 2.1/2.2 (S18), Well 4 (S17), Well 7 (S06), Well 8 (S07), Well 9 (S13), Well 10 (S11), Well 11.1 (S14), Well 11.2 (S12), CWA South Intertie (S19)
	1	25	25005 SE 24th St	24640 SE 24th St	2322 SE 24th St	Well 1 (SO1), Well 2.1/2.2 (S18), Well 4 (S17), Well 7 (S06), Well 8 (S07), Well 9 (S13), Well 10 (S11), Well 11.1 (S14), Well 11.2 (S12), CWA South Intertie (S19)
	1	29	2214 275th Ct SE	2206 275th Ct SE	2228 275th Ct SE	Well 1 (SO1), Well 2.1/2.2 (S18), Well 4 (S17), Well 7 (S06), Well 8 (S07), Well 9 (S13), Well 10 (S11), Well 11.1 (S14), Well 11.2 (S12), CWA South Intertie (S19)
	1	34	4210 244th Pl SE	4187 244th Pl SE	4430 SE 42nd Pl	Well 1 (SO1), Well 2.1/2.2 (S18), Well 4 (S17), Well 7 (S06), Well 8 (S07), Well 9 (S13), Well 10 (S11), Well 11.1 (S14), Well 11.2 (S12), CWA South Intertie (S19)
	1	37	4708 227th Pl SE	4714 227th Pl SE	4702 227th Pl SE	Well 1 (SO1), Well 2.1/2.2 (S18), Well 4 (S17), Well 7 (S06), Well 8 (S07), Well 9 (S13), Well 10 (S11), Well 11.1 (S14), Well 11.2 (S12), CWA South Intertie (S19)

Table 6-25 (cont.)
Monthly Bacteriological Monitoring Locations

Routine, Repeat and Triggered Source Sample Locations and Weekly Rotation Schedule						
Week		ID No.	Routine Sample Site Location	Upstream Repeat Site	Downstream Repeat Site	Groundwater Sources for Triggered Sample Sites
	1	38	5408 248th Pl SE	5420 247th Pl SE	5510 248th Pl SE	Well 1 (SO1), Well 2.1/2.2 (S18), Well 4 (S17), Well 7 (S06), Well 8 (S07), Well 9 (S13), Well 10 (S11), Well 11.1 (S14), Well 11.2 (S12), CWA South Intertie (S19)
	1	39	22664 SE 56th Ave	5218 229TH Ave SE	22621 SE 56th St	Well 1 (SO1), Well 2.1/2.2 (S18), Well 4 (S17), Well 7 (S06), Well 8 (S07), Well 9 (S13), Well 10 (S11), Well 11.1 (S14), Well 11.2 (S12), CWA South Intertie (S19)
	1	44	214th Ave SE & SE 5th Pl	530 214th Ave SE	21410 SE 5th Pl	Well 1 (SO1), Well 2.1/2.2 (S18), Well 4 (S17), Well 7 (S06), Well 8 (S07), Well 9 (S13), Well 10 (S11), Well 11.1 (S14), Well 11.2 (S12), CWA South Intertie (S19)
	1	54	1434 241st Pl SE	1428 242nd Ave SE	1610 242nd Ave SE	Well 1 (SO1), Well 2.1/2.2 (S18), Well 4 (S17), Well 7 (S06), Well 8 (S07), Well 9 (S13), Well 10 (S11), Well 11.1 (S14), Well 11.2 (S12), CWA South Intertie (S19)
	1	56	2637 231st Pl SE	2640 231st Pl SE	2631 231st Pl SE	Well 1 (SO1), Well 2.1/2.2 (S18), Well 4 (S17), Well 7 (S06), Well 8 (S07), Well 9 (S13), Well 10 (S11), Well 11.1 (S14), Well 11.2 (S12), CWA South Intertie (S19)
	1	65	4014 251st Pl SE	4002 252nd Ave SE	4019 251st Pl SE	Well 1 (SO1), Well 2.1/2.2 (S18), Well 4 (S17), Well 7 (S06), Well 8 (S07), Well 9 (S13), Well 10 (S11), Well 11.1 (S14), Well 11.2 (S12), CWA South Intertie (S19)

Table 6-25 (cont.)
Monthly Bacteriological Monitoring Locations

Routine, Repeat and Triggered Source Sample Locations and Weekly Rotation Schedule						
Week		ID No.	Routine Sample Site Location	Upstream Repeat Site	Downstream Repeat Site	Groundwater Sources for Triggered Sample Sites
	1	66	3416 221st Ave SE	3400 221st Ave SE	3424 221st Ave SE	Well 1 (SO1), Well 2.1/2.2 (S18), Well 4 (S17), Well 7 (S06), Well 8 (S07), Well 9 (S13), Well 10 (S11), Well 11.1 (S14), Well 11.2 (S12), CWA South Intertie (S19)
	1	77	609 216th Ave NE	418 216th Ave NE	632 216th Ave NE	Well 1 (SO1), Well 2.1/2.2 (S18), Well 4 (S17), Well 7 (S06), Well 8 (S07), Well 9 (S13), Well 10 (S11), Well 11.1 (S14), Well 11.2 (S12), CWA South Intertie (S19)
	2	2	5524 264th Ave NE	5612 264th Ave NE	5510 264th Ave NE	Well 12 (S16), Well 13 (S24), CWA North Intertie (S19)
	2	4	24010 NE 30th Pl	24042 NE 30th Pl	24002 NE 30th Pl	Well 1 (SO1), Well 2.1/2.2 (S18), Well 4 (S17), Well 7 (S06), Well 8 (S07), Well 9 (S13), Well 10 (S11), Well 11.1 (S14), Well 11.2 (S12), CWA South Intertie (S19)
	2	8	1806 229th Ave NE	1812 229th Ave NE	1736 228th Ave NE	Well 1 (SO1), Well 2.1/2.2 (S18), Well 4 (S17), Well 7 (S06), Well 8 (S07), Well 9 (S13), Well 10 (S11), Well 11.1 (S14), Well 11.2 (S12), CWA South Intertie (S19)
	2	12	410 228th Ave NE	410 228th Ave NE	706 228th Ave NE	Well 1 (SO1), Well 2.1/2.2 (S18), Well 4 (S17), Well 7 (S06), Well 8 (S07), Well 9 (S13), Well 10 (S11), Well 11.1 (S14), Well 11.2 (S12), CWA South Intertie (S19)
	2	14	20928 SE 3rd Way	21009 SE 3rd Way	20920 SE 3rd Way	Well 1 (SO1), Well 2.1/2.2 (S18), Well 4 (S17), Well 7 (S06), Well 8 (S07), Well 9 (S13), Well 10 (S11), Well 11.1 (S14), Well 11.2 (S12), CWA South Intertie (S19)

Table 6-25 (cont.)
Monthly Bacteriological Monitoring Locations

Routine, Repeat and Triggered Source Sample Locations and Weekly Rotation Schedule						
Week		ID No.	Routine Sample Site Location	Upstream Repeat Site	Downstream Repeat Site	Groundwater Sources for Triggered Sample Sites
	2	17	24415 SE 4th Pl	24416 SE 4th Pl	24421 SE 4th Pl	Well 1 (SO1), Well 2.1/2.2 (S18), Well 4 (S17), Well 7 (S06), Well 8 (S07), Well 9 (S13), Well 10 (S11), Well 11.1 (S14), Well 11.2 (S12), CWA South Intertie (S19)
	2	19	1510 228th Ave SE	1515 228th Ave SE	1517 228th Ave SE	Well 1 (SO1), Well 2.1/2.2 (S18), Well 4 (S17), Well 7 (S06), Well 8 (S07), Well 9 (S13), Well 10 (S11), Well 11.1 (S14), Well 11.2 (S12), CWA South Intertie (S19)
	2	23	2814 217th Ave SE	2808 217th Ave SE	2820 217th Ave SE	Well 1 (SO1), Well 2.1/2.2 (S18), Well 4 (S17), Well 7 (S06), Well 8 (S07), Well 9 (S13), Well 10 (S11), Well 11.1 (S14), Well 11.2 (S12), CWA South Intertie (S19)
	2	24	2847 241st Ave SE	2837 241st Ave SE	2861 241st Ave SE	Well 1 (SO1), Well 2.1/2.2 (S18), Well 4 (S17), Well 7 (S06), Well 8 (S07), Well 9 (S13), Well 10 (S11), Well 11.1 (S14), Well 11.2 (S12), CWA South Intertie (S19)
	2	30	4138 205th Ave SE	4139 205th Ave SE	4130 205th Ave SE	Well 1 (SO1), Well 2.1/2.2 (S18), Well 4 (S17), Well 7 (S06), Well 8 (S07), Well 9 (S13), Well 10 (S11), Well 11.1 (S14), Well 11.2 (S12), CWA South Intertie (S19)
	2	35	4040 262nd Pl SE	26221 SE 40th Pl	4032 262nd Pl SE	Well 1 (SO1), Well 2.1/2.2 (S18), Well 4 (S17), Well 7 (S06), Well 8 (S07), Well 9 (S13), Well 10 (S11), Well 11.1 (S14), Well 11.2 (S12), CWA South Intertie (S19)

Table 6-25 (cont.)
Monthly Bacteriological Monitoring Locations

Routine, Repeat and Triggered Source Sample Locations and Weekly Rotation Schedule						
Week		ID No.	Routine Sample Site Location	Upstream Repeat Site	Downstream Repeat Site	Groundwater Sources for Triggered Sample Sites
	2	41	2311 259th Pl SE	2317 259th Pl SE	2219 259th Pl SE	Well 1 (SO1), Well 2.1/2.2 (S18), Well 4 (S17), Well 7 (S06), Well 8 (S07), Well 9 (S13), Well 10 (S11), Well 11.1 (S14), Well 11.2 (S12), CWA South Intertie (S19)
	2	49	6503 E Lake Sammamish Pkwy SE	6415 E Lake Sammamish Pkwy SE	6420 East Lake Sammamish Pkwy SE	Well 1 (SO1), Well 2.1/2.2 (S18), Well 4 (S17), Well 7 (S06), Well 8 (S07), Well 9 (S13), Well 10 (S11), Well 11.1 (S14), Well 11.2 (S12), CWA South Intertie (S19)
	2	52	5150 236th Ave SE	4995 236th Ave SE	23590 SE 52nd St	Well 1 (SO1), Well 2.1/2.2 (S18), Well 4 (S17), Well 7 (S06), Well 8 (S07), Well 9 (S13), Well 10 (S11), Well 11.1 (S14), Well 11.2 (S12), CWA South Intertie (S19)
	2	67	2905 204th Ave SE	2829 204th Ave SE	2915 204th Ave SE	Well 1 (SO1), Well 2.1/2.2 (S18), Well 4 (S17), Well 7 (S06), Well 8 (S07), Well 9 (S13), Well 10 (S11), Well 11.1 (S14), Well 11.2 (S12), CWA South Intertie (S19)
	2	68	20621 NE 8th St	20627 NE 8th St	20609 NE 8th St	Well 1 (SO1), Well 2.1/2.2 (S18), Well 4 (S17), Well 7 (S06), Well 8 (S07), Well 9 (S13), Well 10 (S11), Well 11.1 (S14), Well 11.2 (S12), CWA South Intertie (S19)
	2	72	23944 SE 41st St	4054 239th Pl SE	4060 239th Pl SE	Well 1 (SO1), Well 2.1/2.2 (S18), Well 4 (S17), Well 7 (S06), Well 8 (S07), Well 9 (S13), Well 10 (S11), Well 11.1 (S14), Well 11.2 (S12), CWA South Intertie (S19)

Table 6-25 (cont.)
Monthly Bacteriological Monitoring Locations

Routine, Repeat and Triggered Source Sample Locations and Weekly Rotation Schedule						
Week		ID No.	Routine Sample Site Location	Upstream Repeat Site	Downstream Repeat Site	Groundwater Sources for Triggered Sample Sites
	2	78	21214 SE 40th St	21219 SE 40th	21200 SE 40th PL	Well 1 (SO1), Well 2.1/2.2 (S18), Well 4 (S17), Well 7 (S06), Well 8 (S07), Well 9 (S13), Well 10 (S11), Well 11.1 (S14), Well 11.2 (S12), CWA South Intertie (S19)
	3	5	2404 NE 244th Pl	2403 245th Pl NE	2416 244th Pl NE	Well 1 (SO1), Well 2.1/2.2 (S18), Well 4 (S17), Well 7 (S06), Well 8 (S07), Well 9 (S13), Well 10 (S11), Well 11.1 (S14), Well 11.2 (S12), CWA South Intertie (S19)
	3	10	2575 E Plateau Dr SE	25855 NE 4th PL	25625 E Plateau Dr.	Well 1 (SO1), Well 2.1/2.2 (S18), Well 4 (S17), Well 7 (S06), Well 8 (S07), Well 9 (S13), Well 10 (S11), Well 11.1 (S14), Well 11.2 (S12), CWA South Intertie (S19)
	3	15	21828 SE 1st St	21838 SE 1st St	21827 SE 1st St	Well 1 (SO1), Well 2.1/2.2 (S18), Well 4 (S17), Well 7 (S06), Well 8 (S07), Well 9 (S13), Well 10 (S11), Well 11.1 (S14), Well 11.2 (S12), CWA South Intertie (S19)
	3	18	19820 SE 8th St	19818 SE 8th St	19824 SE 8th St	Well 1 (SO1), Well 2.1/2.2 (S18), Well 4 (S17), Well 7 (S06), Well 8 (S07), Well 9 (S13), Well 10 (S11), Well 11.1 (S14), Well 11.2 (S12), CWA South Intertie (S19)
	3	22	19636 SE 29th St	19640 SE 29th St	19632 SE 29th St	Well 1 (SO1), Well 2.1/2.2 (S18), Well 4 (S17), Well 7 (S06), Well 8 (S07), Well 9 (S13), Well 10 (S11), Well 11.1 (S14), Well 11.2 (S12), CWA South Intertie (S19)

Table 6-25 (cont.)
Monthly Bacteriological Monitoring Locations

Routine, Repeat and Triggered Source Sample Locations and Weekly Rotation Schedule						
Week		ID No.	Routine Sample Site Location	Upstream Repeat Site	Downstream Repeat Site	Groundwater Sources for Triggered Sample Sites
	3	27	3030 E Beaver Lake Dr SE	2830 East Beaver Lake Dr SE	25704 SE 31st Pl SE	Well 1 (SO1), Well 2.1/2.2 (S18), Well 4 (S17), Well 7 (S06), Well 8 (S07), Well 9 (S13), Well 10 (S11), Well 11.1 (S14), Well 11.2 (S12), CWA South Intertie (S19)
	3	32	4126 220th Pl SE	4125 220th Pl SE	3727 220th Pl SE	Well 1 (SO1), Well 2.1/2.2 (S18), Well 4 (S17), Well 7 (S06), Well 8 (S07), Well 9 (S13), Well 10 (S11), Well 11.1 (S14), Well 11.2 (S12), CWA South Intertie (S19)
	3	45	270th Ave SE & SE 11th St	1101 270h Pl SE	1103 272th Pl SE	Well 1 (SO1), Well 2.1/2.2 (S18), Well 4 (S17), Well 7 (S06), Well 8 (S07), Well 9 (S13), Well 10 (S11), Well 11.1 (S14), Well 11.2 (S12), CWA South Intertie (S19)
	3	46	Trossachs Blvd. & SE 24th Ave.	27187 27th St.	2206 SE 22nd Way	Well 1 (SO1), Well 2.1/2.2 (S18), Well 4 (S17), Well 7 (S06), Well 8 (S07), Well 9 (S13), Well 10 (S11), Well 11.1 (S14), Well 11.2 (S12), CWA South Intertie (S19)
	3	47	1931 249th Pl SE	2002 249th Pl SE	1927 249th Pl SE	Well 1 (SO1), Well 2.1/2.2 (S18), Well 4 (S17), Well 7 (S06), Well 8 (S07), Well 9 (S13), Well 10 (S11), Well 11.1 (S14), Well 11.2 (S12), CWA South Intertie (S19)
	3	48	1537 E. Lk Samm Pkwy NE	1715 E. Lk Samm Pkwy. NE	1560 E. Lk Samm Pkwy NE	Well 1 (SO1), Well 2.1/2.2 (S18), Well 4 (S17), Well 7 (S06), Well 8 (S07), Well 9 (S13), Well 10 (S11), Well 11.1 (S14), Well 11.2 (S12), CWA South Intertie (S19)

Table 6-25 (cont.)
Monthly Bacteriological Monitoring Locations

Routine, Repeat and Triggered Source Sample Locations and Weekly Rotation Schedule						
Week		ID No.	Routine Sample Site Location	Upstream Repeat Site	Downstream Repeat Site	Groundwater Sources for Triggered Sample Sites
	3	55	4644 238th Way SE	4634 238th Way SE	4652 238th Way SE	Well 1 (SO1), Well 2.1/2.2 (S18), Well 4 (S17), Well 7 (S06), Well 8 (S07), Well 9 (S13), Well 10 (S11), Well 11.1 (S14), Well 11.2 (S12), CWA South Intertie (S19)
	3	57	3609 212th Pl SE	3605 212th Pl SE	3606 212th Pl SE	Well 1 (SO1), Well 2.1/2.2 (S18), Well 4 (S17), Well 7 (S06), Well 8 (S07), Well 9 (S13), Well 10 (S11), Well 11.1 (S14), Well 11.2 (S12), CWA South Intertie (S19)
	3	58	21341 SE 13th Pl	21326 SE 13th Pl	21520 SE 13th Pl	Well 1 (SO1), Well 2.1/2.2 (S18), Well 4 (S17), Well 7 (S06), Well 8 (S07), Well 9 (S13), Well 10 (S11), Well 11.1 (S14), Well 11.2 (S12), CWA South Intertie (S19)
	3	59	1514 235th Ave SE	1630 235th Ave SE	1502 235th Ave SE	Well 1 (SO1), Well 2.1/2.2 (S18), Well 4 (S17), Well 7 (S06), Well 8 (S07), Well 9 (S13), Well 10 (S11), Well 11.1 (S14), Well 11.2 (S12), CWA South Intertie (S19)
	3	60	24213 SE 37th Pl	24207 SE 37th Pl	24303 SE 37th Pl	Well 1 (SO1), Well 2.1/2.2 (S18), Well 4 (S17), Well 7 (S06), Well 8 (S07), Well 9 (S13), Well 10 (S11), Well 11.1 (S14), Well 11.2 (S12), CWA South Intertie (S19)
	3	64	8513 255th Ave NE	8407 255th Ave NE	8535 255th Ave NE	Well 12 (S16), Well 13 (S24), CWA North Intertie (S19)
	3	71	1838 236th Ave NE	23530 NE 17th Pl	1911 236th Ave NE	Well 1 (SO1), Well 2.1/2.2 (S18), Well 4 (S17), Well 7 (S06), Well 8 (S07), Well 9 (S13), Well 10 (S11), Well 11.1 (S14), Well 11.2 (S12), CWA South Intertie (S19)

Table 6-25 (cont.)
Monthly Bacteriological Monitoring Locations

Routine, Repeat and Triggered Source Sample Locations and Weekly Rotation Schedule						
Week		ID No.	Routine Sample Site Location	Upstream Repeat Site	Downstream Repeat Site	Groundwater Sources for Triggered Sample Sites
	4	1	2308 E Lake Sammamish Pl SE	2311 East Lake Sammamish Pl SE	2221 East Lake Sammamish Pl SE	Well 1 (SO1), Well 2.1/2.2 (S18), Well 4 (S17), Well 7 (S06), Well 8 (S07), Well 9 (S13), Well 10 (S11), Well 11.1 (S14), Well 11.2 (S12), CWA South Intertie (S19)
	4	9	823 258th Ave NE	815 258th Ave NE	1004 258th Ave NE	Well 1 (SO1), Well 2.1/2.2 (S18), Well 4 (S17), Well 7 (S06), Well 8 (S07), Well 9 (S13), Well 10 (S11), Well 11.1 (S14), Well 11.2 (S12), CWA South Intertie (S19)
	4	13	230 211th Pl NE	214 211th Pl NE	236 211th Pl NE	Well 1 (SO1), Well 2.1/2.2 (S18), Well 4 (S17), Well 7 (S06), Well 8 (S07), Well 9 (S13), Well 10 (S11), Well 11.1 (S14), Well 11.2 (S12), CWA South Intertie (S19)
	4	20	2030 212th Ave SE	2205 212th Ave SE	1904 212th Ave SE	Well 1 (SO1), Well 2.1/2.2 (S18), Well 4 (S17), Well 7 (S06), Well 8 (S07), Well 9 (S13), Well 10 (S11), Well 11.1 (S14), Well 11.2 (S12), CWA South Intertie (S19)
	4	26	3045 249th Ave SE	3044 249th Ave SE	3037 249th Ave SE	Well 1 (SO1), Well 2.1/2.2 (S18), Well 4 (S17), Well 7 (S06), Well 8 (S07), Well 9 (S13), Well 10 (S11), Well 11.1 (S14), Well 11.2 (S12), CWA South Intertie (S19)
	4	28	2917 266th Ave SE	2819 266th Ave SE	2922 266th Ave SE	Well 1 (SO1), Well 2.1/2.2 (S18), Well 4 (S17), Well 7 (S06), Well 8 (S07), Well 9 (S13), Well 10 (S11), Well 11.1 (S14), Well 11.2 (S12), CWA South Intertie (S19)

Table 6-25 (cont.)
Monthly Bacteriological Monitoring Locations

Routine, Repeat and Triggered Source Sample Locations and Weekly Rotation Schedule						
Week		ID No.	Routine Sample Site Location	Upstream Repeat Site	Downstream Repeat Site	Groundwater Sources for Triggered Sample Sites
	4	33	3725 Providence Point Dr SE	3710 Providence Point Dr. SE	3727 Providence Point Dr. SE	Well 1 (SO1), Well 2.1/2.2 (S18), Well 4 (S17), Well 7 (S06), Well 8 (S07), Well 9 (S13), Well 10 (S11), Well 11.1 (S14), Well 11.2 (S12), CWA South Intertie (S19)
	4	36	4606 247th Pl SE	4561 247th Pl SE	4612 247th Pl SE	Well 1 (SO1), Well 2.1/2.2 (S18), Well 4 (S17), Well 7 (S06), Well 8 (S07), Well 9 (S13), Well 10 (S11), Well 11.1 (S14), Well 11.2 (S12), CWA South Intertie (S19)
	4	40	SE 44th and 232nd Ct SE	23209 SE 44th St	4305 SE Issaquah-Pine Lake Rd.	Well 1 (SO1), Well 2.1/2.2 (S18), Well 4 (S17), Well 7 (S06), Well 8 (S07), Well 9 (S13), Well 10 (S11), Well 11.1 (S14), Well 11.2 (S12), CWA South Intertie (S19)
	4	42	222 238th Ave SE	218 238th Ave SE	23808 SE 2nd Pl	Well 1 (SO1), Well 2.1/2.2 (S18), Well 4 (S17), Well 7 (S06), Well 8 (S07), Well 9 (S13), Well 10 (S11), Well 11.1 (S14), Well 11.2 (S12), CWA South Intertie (S19)
	4	43	21838 NE 18th Way	21903 NE 18th Way	21822 NE 18th St	Well 1 (SO1), Well 2.1/2.2 (S18), Well 4 (S17), Well 7 (S06), Well 8 (S07), Well 9 (S13), Well 10 (S11), Well 11.1 (S14), Well 11.2 (S12), CWA South Intertie (S19)
	4	50	23425 SE Black Nugget Rd	23205 SE Black Nugget Rd	23425 SE Black Nugget Rd (Club house)	Well 1 (SO1), Well 2.1/2.2 (S18), Well 4 (S17), Well 7 (S06), Well 8 (S07), Well 9 (S13), Well 10 (S11), Well 11.1 (S14), Well 11.2 (S12), CWA South Intertie (S19)

Table 6-25 (cont.)
Monthly Bacteriological Monitoring Locations

Routine, Repeat and Triggered Source Sample Locations and Weekly Rotation Schedule						
Week		ID No.	Routine Sample Site Location	Upstream Repeat Site	Downstream Repeat Site	Groundwater Sources for Triggered Sample Sites
	4	51	NE 8th Pl & 233rd Ave NE	817 233rd Ave NE	23306 NE 8th Pl	Well 1 (SO1), Well 2.1/2.2 (S18), Well 4 (S17), Well 7 (S06), Well 8 (S07), Well 9 (S13), Well 10 (S11), Well 11.1 (S14), Well 11.2 (S12), CWA South Intertie (S19)
	4	53	25913 NE 27th Dr	25923 NE 27th Dr	25901 NE 25th St	Well 12 (S16), Well 13 (S24), CWA North Intertie (S19)
	4	69	265th Ave SE & Belvedere Way	1932 SE Belvedere Way	1901 264th Pl SE	Well 1 (SO1), Well 2.1/2.2 (S18), Well 4 (S17), Well 7 (S06), Well 8 (S07), Well 9 (S13), Well 10 (S11), Well 11.1 (S14), Well 11.2 (S12), CWA South Intertie (S19)
	4	70	21606 SE 16th Pl	21520 SE 16th Pl	21616 SE 16th Pl	Well 1 (SO1), Well 2.1/2.2 (S18), Well 4 (S17), Well 7 (S06), Well 8 (S07), Well 9 (S13), Well 10 (S11), Well 11.1 (S14), Well 11.2 (S12), CWA South Intertie (S19)
	4	73	23039 SE 37th St	23023 SE 37th St	23307 SE 37th St	Well 1 (SO1), Well 2.1/2.2 (S18), Well 4 (S17), Well 7 (S06), Well 8 (S07), Well 9 (S13), Well 10 (S11), Well 11.1 (S14), Well 11.2 (S12), CWA South Intertie (S19)

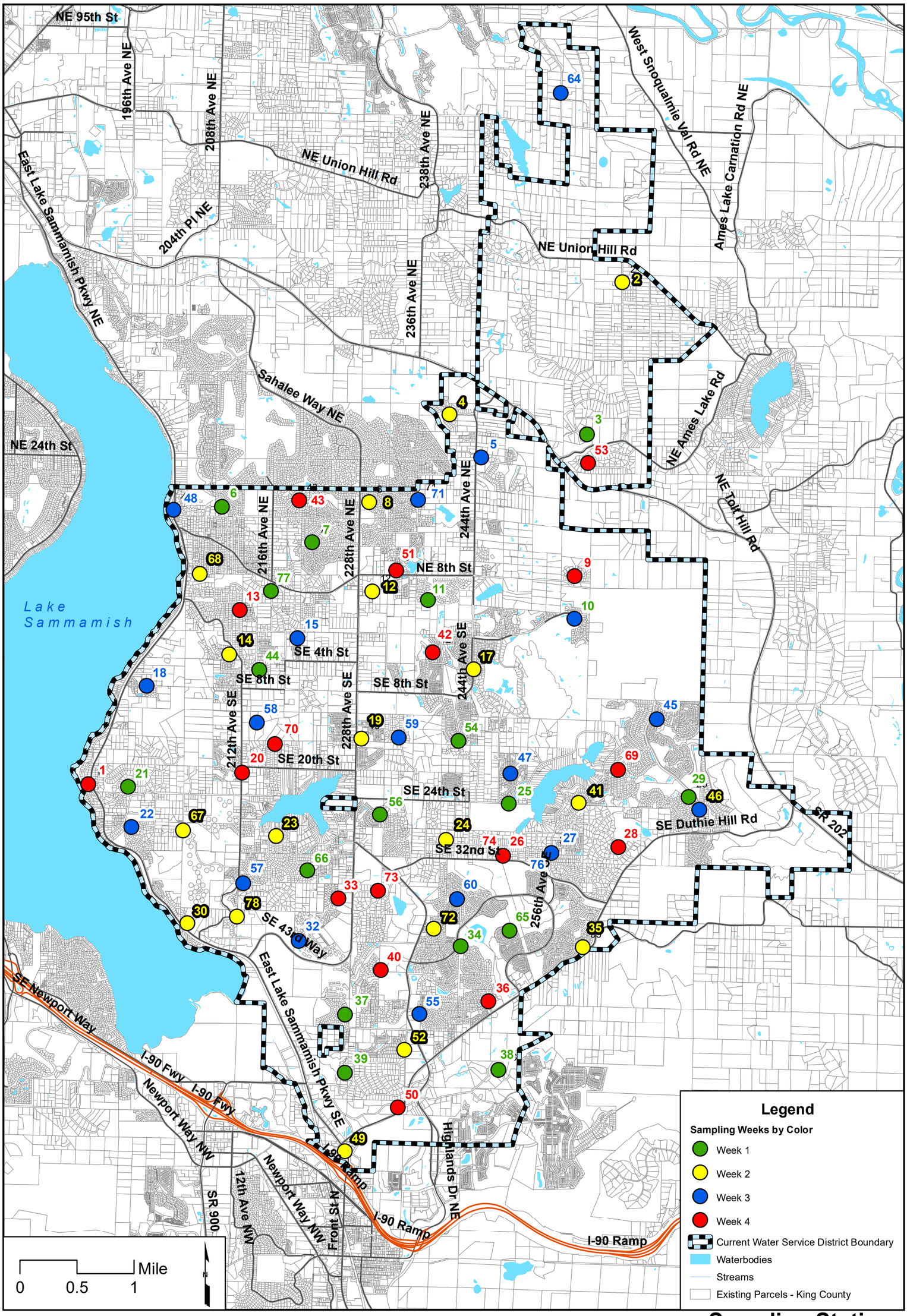

CHS ENGINEERS

Sammamish Plateau Water

Sampling Stations by Week

FIGURE 6-2

Water Comprehensive Plan

6.4.11.3 Inorganic Chemical, Physical Contaminant, Organic Chemical, Radionuclide Monitoring Plans

The District's current Inorganic Chemical, Physical Contaminant, Organic Chemical, and Radionuclide Monitoring Plans are in accordance with WAC 246-290-300. Samples are collected from points representative of the groundwater source, before treatment, and prior to entry to the distribution system.

Sample collection occurs during periods of normal operating conditions. Sample locations are located at the wells and are listed in Table 6-26.

Table 6-26
Inorganic Chemical, Physical Contaminant, Organic Chemical, Radionuclide Monitoring Locations

Location	Address	City
Well 1	2810 - 241st Ave SE	Sammamish
Well 2.1 & 2.2 (Well field)	3401 E. Beaver Lake Dr SE	Sammamish
Well 4	3001 Main St	Sammamish
Well 7	6503 E. Lake Sammamish Parkway SE	Issaquah
Well 8	6651 Lake Sammamish Parkway SE	Issaquah
Well 9	940 - 1st Ave NE	Issaquah
Well 10	25025 SE 32nd Way	Unincorporated King Co.
Well 11.1	400 - 228th Ave NE	Sammamish
Well 11.2	400 - 228th Ave NE	Sammamish
Well 12 (Cascade View)	6410 NE 50th St	Unincorporated King Co.
Well 13 (Cascade View)	26002 NE 70th St	Unincorporated King Co.

6.4.11.4 Lead and Copper Monitoring Plan

The District completed a Corrosion Control Study (Kennedy/Jenks, May 1999) in response to exceedance of copper action levels. A corrosion control system to adjust the pH of the groundwater from the Issaquah Valley Aquifer and Shallow Plateau Aquifer Wells (Wells 1R, 2.1, 2.2, 7, 8, 9, and 10) using Sodium Hydroxide successfully reduced these levels in the southern Plateau Zone water system. The District sampled for copper and lead at 60 locations in 1999 in compliance with WAC 246-290. Because of good results leading to compliance, the number of sampling locations has been reduced to

30. The monitoring locations are located throughout the District's service area and are selected from the list in Table 6-27.

Table 6-27
Lead and Copper Monitoring Locations

Location	City/Post Office	ZIP Code
23953 SE 42nd Pl	Issaquah	98029
24224 SE 42nd Pl	Issaquah	98029
24229 SE 44th St	Issaquah	98029
25508 NE 62nd St	Redmond	98053
27106 NE 40th St	Redmond	98053
4707 272nd Ave NE	Redmond	98053
1328 222nd Pl NE	Sammamish	98074
1627 209th Pl NE	Sammamish	98074
1809 211th Ct NE	Sammamish	98074
1831 226th Pl NE	Sammamish	98074
22433 NE 12th Ct	Sammamish	98074
22512 NE 19th St	Sammamish	98074
22922 NE 14th St	Sammamish	98074
23617 NE 6th St	Sammamish	98074
23703 NE 4th St	Sammamish	98074
24102 NE 6th Pl	Sammamish	98074
24206 NE 22nd St	Sammamish	98074
24240 NE 5th Pl	Sammamish	98074
47 210th Pl NE	Sammamish	98074
723 212th Ave SE	Sammamish	98074
741 218th Pl NE	Sammamish	98074
1803 203rd Ave SE	Sammamish	98075
1810 203rd Ave SE	Sammamish	98075
1920 W Beaver Lk Dr SE	Sammamish	98075
20037 SE 19th St	Sammamish	98075
2018 205th Ave SE	Sammamish	98075
21238 SE 28th St	Sammamish	98075
21420 SE 24th St	Sammamish	98075
21802 SE 38th Pl	Sammamish	98075
22304 SE 18th Ct	Sammamish	98075
22504 SE 20th St	Sammamish	98075
24528 SE 30th St	Sammamish	98075

Table 6-27 (cont.)
Lead and Copper Monitoring Locations

Location	City/Post Office	ZIP Code
3126 213th Pl SE	Sammamish	98075
2907 202nd Pl SE	Sammamish	98075
25206 SE 18th Pl	Sammamish	98075

6.5 Emergency Response Program

6.5.1 Emergency Response

The District is well equipped to deal with most emergencies. Major and catastrophic emergencies will require mutual aid from other agencies for emergency response. The District's capabilities are based primarily on redundancy and backup power supplies as described below:

Multiple Water Sources. The District currently operates 12 wells and 8 booster pump stations. Four separate Puget Sound Energy (PSE) substations serve these facilities. Three of the PSE substations serve District facilities directly. Tanner Electric purchases power from the fourth PSE substation, and in turn sells it back to the District to power Wells 12 and 13. The Plateau Zone Regional Line connection does not require power to provide service to the 297 Zone. PSE has granted the District emergency priority service status during incidents.

Emergency Electrical Power Sources. Fixed diesel generators are available to operate three of the 14 wells currently in use (Wells 4, 9, and 12) and three booster pump stations (297, Well 4, and Well 12) during extended power outages. Due to the large power requirements for Wells 7, 8 and 11.2 and the 43rd Booster Station, these components cannot be run on District owned portable generators. A fixed diesel generator also powers the office site during power outages. Four portable generators are available at the District office and at the Well 12 site to provide power to the other wells and booster pump stations.

Multiple Water Storage Tanks. The District currently has eight storage tanks. In 2017, the District completed a pilot project to install an earthquake valve on the 7MG tank to retain water in the tank that can be distributed to customers during an emergency incident. The District is researching this option to install on other tanks.

Redundancy Analysis. The District performs redundancy and capacity analyses of the distribution system as part of the Water Comprehensive Plan to determine whether additional pipeline looping is required and where loops would be most beneficial to the system operation. Additional looping will be incorporated into future projects as they are developed.

District Fuel Storage Tanks. After having difficulty securing reliable fuel supplies to fuel generators and vehicles during the Hanukkah Eve Windstorm in December 2006 and the 2012 Winter Storm Event, the District installed a fueling station at its headquarters site in 2015. The site improvements included a 6,000-gallon storage tank for unleaded gasoline and an 8,000-gallon tank for diesel storage. Under normal operating conditions unleaded gasoline is reordered when the tank reaches 2,500 gallons remaining and diesel is reordered when the tank reaches 4,000 gallons remaining. The tanks are topped off prior to any expected or forecasted events such as an impending weather event such as a winter storm.

Emergency Equipment. The District is equipped with radio-dispatched vehicles that have the necessary tools to deal with routine emergencies. The District is connected to King County's regional 800 MHz radio station and has an amateur radio station with Winlink email messaging capabilities. The District participates in weekly radio checks on the 800 MHz system and also checks the amateur radio station regularly. The District has a van equipped with many repair equipment parts. A backhoe, a trackhoe excavator, a vactor truck and two dump trucks with trailers are also available for emergencies such as pipeline failures. Emergency lights and generators are available along with safety equipment. The District also has a fuel truck to store and transport fuel for refueling generators during an emergency.

Emergency Telephone and On-Call Personnel. Customers can call a 24-hour telephone number (425-392-6256) which links to the District's on-call field personnel. The two on-call staff members are equipped with service vehicles, pagers, cellular telephones, and laptop computers for remote connection to the telemetry system and District local area network. The response time is generally less than 40 minutes. Each on-call staff member has a copy of portions of the District's Emergency Response Plan, including a list of emergency staff telephone numbers. Only fully qualified and experienced field technicians are in the on-call rotation.

6.5.2 Emergency Response Plan

The District developed an Emergency Response Plan (ERP) in 2004 to guide the District through emergency incidents. District policy is to use the Incident Command System (ICS) to organize its response to emergency incidents that occur within the District and ensure the health and safety of the public as well as District employees. District staff updated the Plan in November 2004 to be compliant with the National Incident Management System (NIMS) and ICS. The Plan was most recently revised in 2014. The Emergency Response Plan is exempt from public inspection and copying pursuant to the provisions of the Revised Code of Washington (RCW) 42.56.420.

The Incident Command System is a key NIMS component. ICS provides a standardized, on-scene, all-hazards incident management concept that can be consistently applied by all agencies. The District trains all staff in ICS 100 (an Introduction to ICS); 200 (ICS for Single Resource and Initial Action Incidents); 700 (an Introduction to NIMS) and 800 (National Response Framework, an Introduction.) All staff serving as Command or General Staff positions on the ICS Org chart are also trained in ICS 300 (Intermediate

ICS for Expanding Incidents) and 400 (Advanced ICS: Command and General Staff – Complex Incidents.) Ongoing training includes tabletop exercises and building evacuation drills. In addition, District staff participate in regional training exercises, and in 2016 participated in the Cascadia Rising Regional Earthquake Exercise.

The District's Emergency Response Plan is divided into six volumes:

- Volume 1: Planning
- Volume 2: Response
- Volume 3: Resource Manual
- Volume 4: Vulnerability Assessment
- Volume 5: District Water Facilities Schematics
- Volume 6: District Sewer Facilities Schematics

6.5.3 Emergency Response Plan, Volume 1

6.5.3.1 Chapter 1: Introduction

Chapter 1 of Volume 1 includes a brief introduction to the District's boundaries and services. It also outlines alignment with NIMS, emergency management policies and priorities and basic assumptions including the expectations that employees will be familiar with safe operating procedures and planned responses to system component failures. The chapter discusses who authorizes and directs emergency responses.

6.5.3.2 Chapter 2: Emergency Preparedness: District Planning

The chapter discusses the emergency planning committee, the vulnerability assessment, mutual aid, and the definition of emergencies. Table 6-28 summarizes the evaluation of emergencies.

Table 6-28
Evaluation of Emergencies

Level I – Minor Emergencies	
Definition:	A minor to moderate incident wherein local resources are adequate and available.
Examples:	Minor earthquakes (magnitude less than 5.0) Local flooding Short term power or communications failure
Level II – Major Emergency	
Definition:	A moderate to severe emergency wherein local resources are adequate and mutual aid may be required on a regional or statewide basis.
Examples:	Strong to very strong earthquakes (magnitude 5.0 to 6.1) Regional flooding

Table 6-28
Evaluation of Emergencies

	Long-term power and/or communications failure, usually system-wide
Level III – Catastrophic Emergency	
Definition:	A major disaster wherein resources in or near the impacted area are overwhelmed and extensive state and/or federal resources are required.
Examples:	Major earthquakes (magnitude greater than 6.1)

6.5.3.3 Chapter 3: Emergency Preparedness: Implementing District Planning

This chapter discusses the phases of a response to an emergency and the incident command system used to respond to those emergencies. The phases of response are outlined in Table 6–29.

Table 6-29
Phases of Response

Phase	Basic Action
1. Detect and Notify	First person to detect an emergency must immediately notify the appropriate personnel or direct another staff member to do so.
2. Isolate and Contain	After notification is made identify and secure primary containment points.
3. Evaluate and Plan	Evaluate the situation and gather intelligence as much as possible to resolve the incident.
4. Resolve	The Incident Commander (the senior first responder at the scene) will activate the plan to resolve the situation. Incident resolution includes life safety, protecting critical systems and incident stabilization.
5. Deactivate	The post incident recovery process. This process can be done in three phases: 1. Short-term – Can involve de-mobilization, refuse removal, report writing, debriefing, etc. 2. Medium-term – Can involve begin facility repairs, investigations, media relations. 3. Long-term – Can involve policy review, training, counseling, etc.

6.5.3.4 Chapter 4: Emergency Preparedness: Response Organization

Chapter 4 outlines basic planning concepts, SMART objectives and the Incident Command System organization. It defines the roles and responsibilities for each Incident

Staff Command and General Staff position. Below is a brief description of each position:

- **Incident Commander:** Responsible for all incident activities, strategies and tactics. Oversees all incident operations.
- **Public Information Officer:** Develops and distributes incident information to the public and media outlets.
- **Safety Officer:** Monitors and assesses safety hazards or unsafe conditions and develops measures to ensure safety of incident personnel.
- **Operations Section Chief:** Manages tactical operations during the incident to reduce hazards, control the situation and restore normal operations.
- **Planning Section Chief:** Maintains situational awareness, gathers incident documentation and prepares the Incident action Plan.
- **Logistics Section Chief:** Provides and orders resources such as facilities, fuel, equipment, food service, communications and medical services
- **Finance Section Chief:** Conducts all financial and cost analysis activities related to the incident.

Figure 6-3 shows the District's ICS Organization Chart:

Figure 6–3: Sammamish Plateau Water Incident Command System Organization

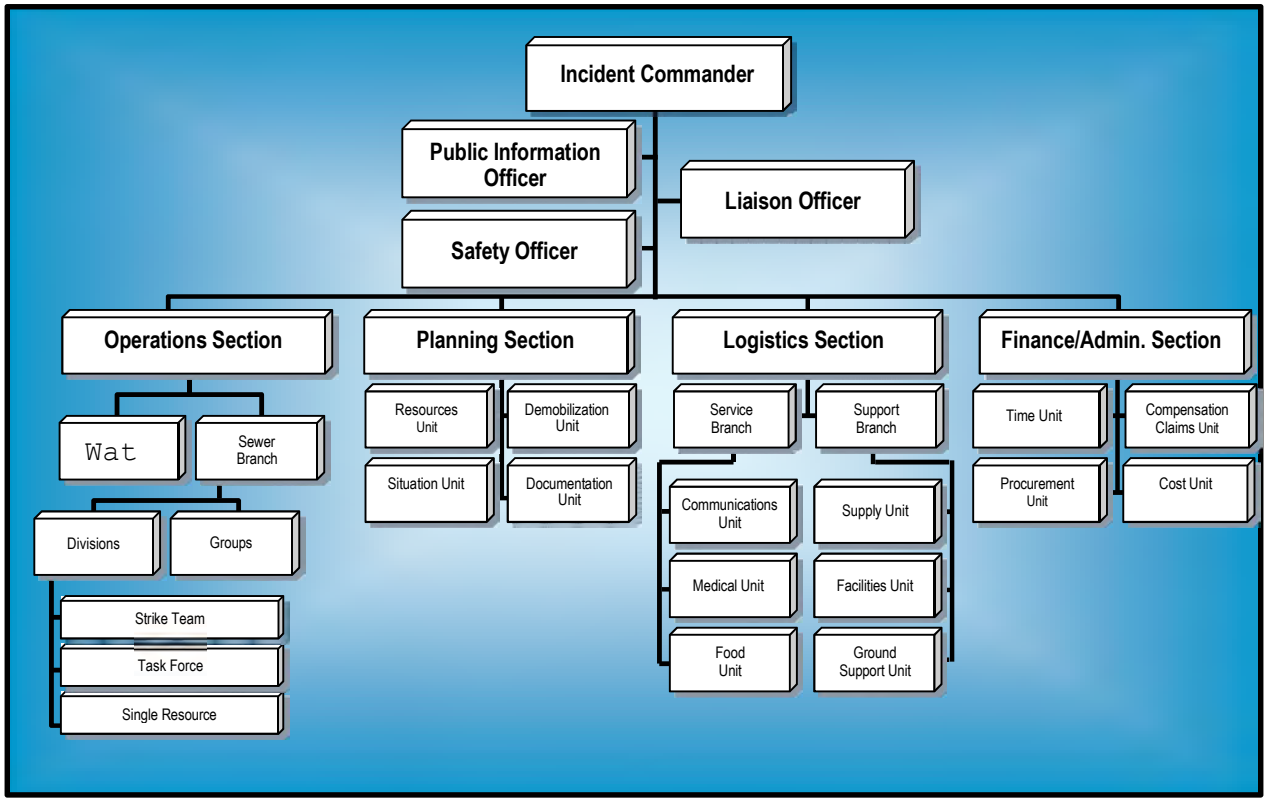

A key feature of the NIMS Incident Command System organization is the ability to expand or contract the organization in an orderly manner as the size and significance of an incident changes.

The size of the District's response is determined by three major incident priorities:

1. Life Safety
2. Incident Stability – the Incident Commander is responsible for determining the strategy that will:
   a. Minimize the effect that the incident may have on the surrounding area.
   b. Maximize the response effort while using resources efficiently.
3. Property Conservation

The District's Incident Command System adheres to NIMS principles. The District recognizes that the nature and size of incidents is constrained by the size of the District, the range of services that it provides and the number of staff available to respond to an incident.

6.5.3.5 Chapter 5: Emergency Preparedness: Response Process

Chapter 5 discussed incident action planning, the development of the Incident Action

Plan, and the Planning Cycle and the Planning "P", a visual guide to the processes and steps involved in incident planning.

6.5.4 Emergency Response Plan, Volume 2: Response

Volume 2 of Sammamish Plateau Water's Emergency Response Plan is designed to use during actual emergency incident response. Volume 1 provides the background theory of the Incident Command System structure, and Volume 2 provides the working tools to put the plan in place.

Volume 2 contains the following:

- District Incident Command System (ICS) Structure
- District ICS Organizational Chart
- Incident Command and General Staff responsibilities
- S.M.A.R.T. Objectives
- Four District Incident Preplans for Service Disruptions, Natural Causes Incidents, Human Causes Incidents and Pandemic Incidents.
- All ICS Forms and Checklists, arranged by the Command or General Staff position responsible for completing the forms.
- Additional District resource document forms such as media releases, boil water order information, and District facility lists.

6.5.5 Emergency Response Plan, Volume 3: Resource Manual

The Resource Manual is a supplement to Volumes 1 and 2. It contains District-specific information and is updated on an ongoing basis:

Chapter 1 - COMMUNICATIONS AND RADIO

Emergency Response Telephone Message Directions Checklist
General Location of Employee References
800 MHz Emergency Radio Protocol and Directions
Motorola Talkabout 200 Handheld Radio
Emergency Telephone System Operation
Zone 1 Emergency Managers Checklist

Chapter 2 - FACILITY INFORMATION

Building Emergency Escape Plan
FEMA Damage Ranking Assessment
Vicinity and Community Facilities Map
Facilities and Vulnerable Areas Map
Adjoining Utilities Intertie Locations
Plateau Zone Booster Pump Stations and Pressure Reducing Valves
Plateau
Existing Facilities Cascade View Zone
Cascade View Zone Hydraulic Profile
Bioxide Safety Data Sheet

Caustic Soda Safety Data Sheet
Sodium Fluoride Safety Data Sheet
Sodium Hypochlorite Safety Data Sheet
Elevator Emergency Evacuation Plan
Water Management Laboratories After Hours Testing

Chapter 3 - GENERATORS

List of Generators and Locations
SPWSD Generator Fuel Consumption Calculations
Generator Fuel Consumption Worksheet
Diesel Fuel Consumption Rate Calculator and KVA, Ampere Calculator

Chapter 4 - AGENCIES, CONTRACTORS, SUPPLIERS AND FUEL SUPPLIERS

Fire District Notification During Emergencies
Area Agency/Institution Contacts
Contractors
Suppliers
Generator Rentals
Wholesale Fuel Suppliers
Portable Toilet Vendors

Chapter 5 - MEDICAL/HOSPITAL

Medical Clinic and Hospital Listing
Plateau Medical and Rescue Facilities
Hospital Driving Directions

Chapter 6 - MUTUAL AID

This chapter contains mutual aid agreements, forms and procedures for the following networks:

- Washington Water/Wastewater Agency Response Network
- King County Regional Coordination Framework

6.5.6 Emergency Response Plan, Volume 4: Vulnerability Assessment

In the wake of the tragic 9/11 terrorist attacks on the World Trade Center and the Pentagon, there is widespread concern about the vulnerability of water utilities and other critical infrastructure as possible terrorist targets. As a result, President Bush signed the "Public Health Security and Bioterrorism Preparedness and Response Act of 2002", PL 107-188. This Act states that community water systems that serve more than 3,000 people must review the vulnerability of their water systems to a terrorist attack or other intentional acts intended to substantially disrupt the ability of the system to provide a safe and reliable supply of drinking water.

The District performed this assessment in 2003 and used the Risk Assessment Methodology for Water as defined by Sandia National Laboratories and the American

Water Works Research Association. The document is exempt from public inspection and copying pursuant to the provisions of the Revised Code of Washington (RCW) 42.56.420.

6.5.7 Emergency Response Plan, Volume 5: District Water Facilities

The District compiled a manual of all of its water facilities. The manual includes a photo of each building or tank, inside views of piping, water treatment facilities, pumps, generators and control panels. The manual is designed for staff to use in the field during an emergency to isolate and contain damaged infrastructure. Staff revises the manual as new infrastructure is added or changed.

6.5.8 Emergency Response Plan, Volume 6: District Sewer Facilities

The District has also developed a manual of all of its sewer facilities. The manual includes a photo of each lift station building, tanks, pumps and control panels. The manual is designed for staff to use in the field during an emergency to isolate and contain damaged infrastructure. Staff revises the manual as new infrastructure is added or changed.

6.5.9 Seismic Resiliency

The District conducted a seismic vulnerability assessment in 2014. The objective of the project included the following items:

- Quantify the seismicity and earthquake hazards confronting the District service area
- Evaluate the reliability of the District's system performance for three earthquake scenarios
- Identify the District's system assets that are deficient and contribute to overall system risk
- Develop and prioritize mitigation projects that can effectively reduce the risk of failure
- Assess the economics of the mitigation projects with the potential of applying for Federal Emergency Management Agency (FEMA) grant funding.

This report is organized into the following sections:

- Section 1. Introduction, Overview, Findings, and Recommendations
- Section 2. Seismology and Geotechnical Hazards
- Section 3. Facility and Pipe Vulnerability
- Section 4. Consequence of Asset Failure and System Risk
- Section 5. Mitigation Recommendations
- Section 6. Economic Analysis of Seismic Mitigation Projects

In 2017, the District engineering staff is proceeded with the report recommendation to work with a consultant to review routes regarding the installation of a new seismic resistant water pipeline from Well 9 to the 650 Zone. In 2018, the District Board adopted a resolution to move forward with implementing recommendations from the 2017 report.

6.5.10 Coliform Monitoring Plan and Triggered Ground Water Monitoring Plan

The District developed a Coliform Monitoring Plan in 2012. The plan was updated in 2017 to meet requirements in the WAC 246-290 (Washington Administrative Code) 2016 Revised Total Coliform Rule that apply to Group A Public Water Systems.

This updated Coliform Monitoring Plan has been developed to meet the following objectives:

- To ensure representative routine coliform sampling.
- To establish repeat sampling sites both upstream and downstream of the routine sites.
- To provide documentation of how the District conducts coliform sampling.
- To enhance water quality surveillance.

The Coliform Monitoring Plan describes procedures for coliform violations, both non-acute, acute and other types of violations, and identifies sampling locations and locations in the event that repeat sampling is needed.

In conjunction with the update of the Coliform Monitoring Plan, in 2017 the District developed a Triggered Ground Water Monitoring Plan. The Triggered Ground Water Monitoring Plan meets the Ground Water Rule, intended to increase protection for consumers of public drinking water systems that rely on ground water sources.

The Triggered Ground Water Monitoring Plan describes:

- The strategy chosen to provide compliance with the Ground Water Rule (triggered monitoring).
- The District's system, which includes two hydraulically separate systems that each use both ground and surface water sources.
- Establishes sources representing coliform monitoring locations identified in the Coliform Monitoring Plan
- Details of the District's implementation of triggered ground water monitoring

The Triggered Ground Water Monitoring Plan will be updated in conjunction with updates to the Coliform Monitoring Plan, anticipated to occur every six years. Copies of these plans can be found in Appendix J.

6.6 Safety Procedures

The District places a high value on the safety of its employees. The District is committed to providing a safe workplace for all employees and has developed this accident prevention program for injury prevention to involve management, supervisors, and employees in identifying and eliminating hazards that may develop during our work

process.

It is the basic safety policy of the District that no task is so important that an employee must violate a safety rule or take a risk of injury or illness in order to get the job done. Employees are required to comply with all District safety rules and are encouraged to actively participate in identifying ways to make our District a safer place to work.

The District administration does its part by devoting the resources necessary to maintaining a safety committee composed of management and elected employees. Implementation of the Safety Program is a shared responsibility assigned to two Operation Team members, one each from the Water Team and Sewer Team. These Safety Leads are assisted by the Human Resources Manager and Operations Analyst. The District has developed a system for identifying and correcting hazards. As much as possible, the District plans for foreseeable emergencies. The District also provides initial and ongoing training for employees and supervisors and has established a disciplinary policy to ensure that District safety policies are followed. The District is committed to provide a safe working environment and to abide by or exceed the OSHA/DOSH Rules and Regulations.

Whenever reasonably possible the District designs its facilities and equipment to eliminate employee exposure to hazards. Where these engineering controls are not reasonably possible, the District writes work rules that effectively limit employee exposure to the hazard. When the above methods of control are not possible or are not fully effective employees are required to use personal protective equipment (PPE).

There are workplace hazards that field personnel are exposed to that are intrinsic to water utility work. These hazards are grouped into seven fundamental categories in Table 6-30 below. This table lists the workplace hazards and the locations where these are typically found.

Table 6-30
Workplace Hazards

Type of Hazard	Location of Hazard
Chemical	Sodium Hydroxide (NaOH, caustic soda, maximum 50% concentration): Wells 1, 2, 9, 10
	Sodium Fluoride (NaF): Wells 1, 2, 9, 10, 12, 13, Section 36 Booster Pump Station
	Ferric Chloride (FeC13) Well 4
	Miscellaneous chemicals for water analysis, cleaning, etc.
Asbestos Cement Pipe	Water mains
Confined Spaces	43rd Booster Pump Station Reclassified
	Pressure Reducing Valve Vaults
	Meter Vaults
	Tanks
Falls	43rd Booster Pump Station Reclassified
	Pressure Reducing Valve Vaults
	Meter Vaults
	Tanks
Electrical – Lockout/Tagout	Generators and Pump Station Control Panels
Non-Electrical – Lockout/Tagout	High-Pressure Fluid Compressors
	Pressure Reducing Valves
	Distribution System
Heavy Equipment	Backhoes, Trackhoe, Skid loader, Dump Trucks, Jet & Vac Truck Forklift

The District has a formal Accident Prevention Program. The Accident Prevention Program is subdivided into three parts: 1) the Basic Program section, 2) the Hazard Specific Safety Programs section, and 3) the Safety Training section. Together, these sections comprise the District's Accident Prevention Program. Interested individuals may examine the Districts Accident Prevention Program at the District's main offices.

The Basic Program section was adopted by the District Board of Commissioners on January 7 , 2013 by Resolution 4210, and addresses the subjects of:

- Management Commitment
- Safety and Health Responsibilities
- Employee Participation
- Safety Committee Charter
- Hazard Recognition
- Incident Response

- Hazard Prevention and Control
- Disciplinary Policy

The Hazard Specific Safety Programs section is where the hazards listed in Table 6-30 are addressed. Eighteen specific programs are currently included in the Accident Prevention Program.

In the Safety and Health Training and Education section, employee safety and training requirements are identified, and safety and health training course outlines are presented. This assures consistency in the ongoing training of employees with respect to safety and health issues.

The Accident Prevention Program is continually evaluated for relevance and appropriateness as the work environment changes and as accumulated experience demonstrates the need for changes in the individual elements of the program. The Safety Program Manager in cooperation with the Safety Committee is responsible for the preparation and maintenance of this program. Because the Basic Program section is more general in nature, most updates and changes impact elements of the Hazard Specific Safety Programs or Safety Training sections.

The District's Accident Prevention Program creates certain legal liabilities and requires the commitment of significant resources, both people and financial to be effective, consequentially the Program is presented to and approved by the District's Board of Commissioners. There is a formal process for updating and changing elements of the program to reflect changed District facilities, needs and regulatory requirements.

6.7 Cross-Connection Control Program

The following section summarizes the Cross-Connection Control Program presented in Appendix L. This version of the program was adopted by District Resolution No. 3340 (on July 18, 2005. The Cross-Connection Control Program (CCCP) describes the operating policies and the backflow prevention assembly, installation, and testing practices and procedures of the District. The CCCP conforms to the requirements of WAC 246-290-490, but it is structured so that it can be supplemented with other published documents as well as with materials developed specifically by the District for District use. Implementation of the CCCP initially targeted the higher risk cross-connection customer class (nonresidential). As resources allow, the CCCP is being extended to cover all customer classes.

The Cross-Connection Control Program consists of 11 sections and is summarized below:

1. ***Purpose.*** The Washington State Department of Health (DOH) mandates that all Group A Water Systems develop a cross-connection control program. The purpose of the CCCP is to protect the public water system from contamination via cross-connection and therefore the health of District water customers.

2. ***Responsibilities.*** This CCCP section clearly defines the responsibilities of the District and its customers. The District is responsible for requiring inspections, regulation interpretation and guidance, records, and customer inquiry response. The water customer is responsible for control or elimination of cross-connections directly affecting their property, providing records to the District, and the costs of inspections, testing, repairs, and/or replacement of backflow prevention assemblies.

3. ***Applicability of Regulations and References.*** There are numerous state and local regulations that directly or indirectly relate to cross-connection control. This section of the CCCP identifies many of these regulations and adopts the most current regulations as the standards for cross-connection control within the District.

   There are also policies and procedures, developed by professional organizations that provide methods and guidance for operation, installation, and inspection. Publications of three of these organizations are noted in this section. They are: 1) the *Cross-Connection Control Manual: Accepted Procedure and Practice* [Pacific Northwest Section, AWWA], 2) the *Manual of Cross-Connection Control* [Foundation for Cross-Connection Control and Hydraulic Research, University of Southern California], and *Recommended Practice for Backflow Prevention and Cross-Connection Control (AWWA M14)* [AWWA]. This section of the CCCP, also adopts the most current versions of these guidebooks.

   Interpretation of the referenced regulations and references are subject to the discretion of the District.

4. ***Operating Procedures.*** This CCCP section describes guidelines for 1) Premises Isolation, 2) the Type and Location of Protection, and 3) Elimination of Cross-Connections. The type and location of protection assemblies that should be used is based upon the degree of hazard of the connection. WAC 246-290-010 includes definitions of two types of cross- connection control: (1) (external) premises isolation, in which an air gap or backflow prevention device is installed at or near the connection, and (2) (internal) premises isolation, in which an air gap or backflow prevention device is installed within a privately-owned property or as a plumbing fixture. Because devices used for external premises isolation are more accessible for inspections, the District requires this method for new installations. However, both methods may be considered on a case-by-case basis.

5. ***Installation Procedures*****.** The publications of the professional organizations noted in Section 3, Applicability of Regulations and References", provide generally accepted methods for installation of backflow prevention assemblies. This section references those publications and provides specific guidance on installing Approved Air Gaps, Reduced Pressure Backflow Assemblies, Double Check Valve Assemblies, and Pressure Vacuum Breaker Assemblies and Spill-Resistant Pressure Vacuum Breaker Assemblies.

6. ***Inspection and Testing Procedures.*** Backflow prevention assemblies must be inspected and tested at the time of 1) initial installation, 2) after the assembly is

repaired, reinstalled, or relocated, 3) annually after the initial installation, and 4) as required by the District if testing indicates repeated failures.

Testing must be done in accordance with WAC 246-290-490 and the requirements of the DOH. This section describes the process for notifying, testing, reporting of test results, and enforcement of the CCCP.

7. ***Backflow Incident Response Procedures.*** With the implementation of the District's current AMI system, the District has the ability to detect backflow occurrences at the meter and quickly investigate the problem. Customers may also report water quality issues that may lead to the discovery of a backflow incident upon investigation. In accordance with WAC 246-290-90, all incidents are reported and documented on a form acceptable to the DOH, as delineated in the WAC. Backflow incidents that are discovered by or reported to the District are documented in the annual CCCP summary report.

8. ***Quality Control Program.*** This section of the CCCP describes the minimum requirements for the District to maintain quality control of the cross-connection control program. The tester/inspector and their equipment are required to be certified and have those certifications on record at the District. A test report submittal schedule is also provided in this CCCP section.

9. ***Records.*** WAC 246-290-490 describes the minimum records that the water purveyors must maintain. This CCCP section lists the extensive records the District keeps for all cross connections within its water system. Customer involvement is a vital element of the record maintenance. A sample test report, to be used after installation, repair, and for annual inspection is provided as an attachment to the CCCP.

10. ***Public Education Program.*** The District is responsible for educating its customers about the District's cross-connection program and backflow prevention. This CCCP section outlines five elements of the public education programs used to accomplish this task. A sample notification letter is provided as an attachment to the CCCP.

11. ***Improvements Program.*** The final CCCP section provides guidance for continuous improvement of the District's Cross-Connection Control Program. To meet existing and future cross-connection needs, this section states the tasks the District should undertake to comply with this cross-connection control program. Table 6-31 provides an estimate of the staff time required to execute this program.

Table 6-31
Estimated Staff Time Required to Implement Cross-connection Control Program
(1 FTE = 1,788 hours)

Activity	Description	Annual Staff Hours	FTE
Inspect new connections	1 hr/connection x 20 nonresidential connections/year estimated)	20	0.011
Inspect existing connections (residential, nonresidential, and irrigation)	Annual tests performed by outside testers.	0	0
	District testing for special circumstances – 1 hr x 3/year	3	0.002
	Inspections – 1 hr x 300/year	300	0.168
Incident response (including travel)	4 hrs/response x 3 incidents/year (assumed)	12	0.007
Program administration (includes public education, program guidance, plan review, recordkeeping, etc.)	0.25 hr/connection x 6,642 existing connections w/ cross-connection control devices (estimated will increase as connections increase)	1,660	0.928
			0
Program compliance expansion to non single-family accounts	1 hr/account x 20 accounts/yr (total of 150 accounts)	10	0.006
Program compliance expansion to single-family accounts	1 hr/account x 500 accounts/yr (assumes 3,000 accounts over 6 years)	500	0.280
Totals		2,505	1.401

The District's 2017 CCCP records identified 6,916 backflow assemblies. Test reports were received for 5,864, representing 84% of these assemblies. There were 59 high hazard premises identified, with 55, representing 93%, protected by an air gap or reduced pressure devices.

The District has an active program to identify and enforce the CCCP for new services. The majority of site surveys conducted over the past few years are associated with projects for new construction or tenant improvements where a permit sign-off by the District is required. In addition, the District is continuing to work on identification of existing service connections that should have backflow protection implemented and bringing them into compliance. Acquisition of new software that will allow electronic submission of backflow assembly test reports is expected to reduce program staff time spent on data entry. The new software may also allow direct integration with Customer Information System software, to assist in identification of non-single-family service connections that do not currently have a backflow assembly and/or test report.

6.8 Customer Complaint & Inquiry Response

Customer service specialists in the Customer Service and Finance Department receive the majority of customer complaints and inquiries, typically by phone or email. The nature of the inquiry (general complaint, pressure problems, consumption issues – billing question, cloudy water, bad taste or odor, etc.) is electronically recorded in the District's Customer Service Information computer system. Certain inquiries, especially those associated with billing questions, are handled by the customer service specialists. If the customer service specialist is not able to resolve the inquiry, they will initiate a service order including the customer's name, address, telephone number(s), account number, and the best time to meet with the customer. These inquiries are normally forwarded to the Field Services Supervisor. Either the Field Services Supervisor or Field Services Technician will contact the customer to try to resolve the problem. The goal is to make the initial contact within 1 hour of receipt of complaints and inquiries received during normal work hours. Complaints and inquiries left as telephone messages or emails received during non-working hours are addressed during the next regular business day. The outcome of each service order is recorded electronically, and the completed service order is filed.

The relatively recent addition of Automated Metering Infrastructure (AMI) has changed the District's approach to leaks in the customer's water system. Previously the District staff would look for use that was out of a customer's normal usage rate during meter reading and bill preparation activities. Now, the District receives AMI daily system monitoring reports. These include alerts for higher than normal usage through preset parameters programmed into the AMI system. For single-family customers, if an alert occurs and there is evidence of a leak in progress, continuous use of at least 0.7 cubic-feet per hour (5.2 gallons per hour) for 95 hours, an attempt is made to notify the customer. If the suspected leak is between 0.7 and 2.0 cubic feet per hour, the customer is sent a letter by U.S. mail. If the suspected leak is over 2.0 cubic feet per hour (15 gallons per hour), an attempt is immediately made to notify the customer by phone, email or in person. If no direct contact can be made, the flow may be reduced at the meter, leaving positive pressure on the customer's system and a door hanger left advising the customer of the situation. Non single-family customers are notified if there is continuous use for 95 hours of more than 3.0 cubic-feet per hour (22.4 gallons per hour).

There are some complaints or inquiries that cannot be readily addressed by the customer service or field service personnel. These are forwarded to the Water Operations Superintendent for further investigation and/or action. These most frequently include water quality complaints that appear to be associated with the distribution system water quality, or service line leaks located between the District water main and meter.

The District is developing a system to plot complaints that relate to water quality or pressure using the District's Geographic Information System (GIS), to examine the data for geographical trends and groupings.

The numbers of customer complaints for 2017 are shown in Table 6-32, along with general descriptions of the inquiries and typical resolutions. The figures presented in

Table 6-32 represent those inquiries that are recorded in the Customer Information System software.

Table 6-32
Customer Complaints and Inquiries

2017 Inquiry Type	Inquiries Received		
	Customer Initiated	**District Initiated**	**Total**
BILLING The majority of inquiries concerning billing are addressing payments, including providing information and direction on bill payment options, final bills, late payments, and payment arrangements. These are typically handled by customer service providing information over the telephone. District initiates most actions to padlock meters (for non-payment). Customer initiated padlock inquiries are normally requesting a meter be unpadlocked. Other inquiries are to change or correct contact information and other miscellaneous questions regarding billing. All inquiries regarding billing originate from the customer to the District.			
Payment	2,348	0	2,348
Padlock / Un-Padlock	126	199	325
Contact Information	152	0	152
Question / Miscellaneous	38	0	38
BILLING TOTAL	**2,863**	**0**	**2,863**
WATER USE Communications regarding water use can originate either from the customer or the District. Queries regarding "No Water" come from the customer. If the meter has been turned off by the District for non-payment, this information will be explained to the customer. If it is unclear why the customer does not have water, a field service representative will investigate the possible cause. "No Flow" reports are generated through the District's AMI meters, indicating 21 continuous days of no water flow. These are also investigated with a customer contact and/or field visit to verify the situation. The most common inquiry regarding water use concerns a higher than expected rate of water flow. In a few cases the customer will contact the District and may request verification of the meter reading. The majority of the communications regarding water use are generated from the District's AMI meter alerts as described previously, with the District providing notification to the customer.			
No Water	19	0	19
No Flow	0	197	197
Use – High/Continuous	19	2,455	2,474
Use – Verify Reading	12	0	12
WATER USE TOTAL	**50**	**2,652**	**2,702**

Table 6-32 (cont.)
Customer Complaints and Inquiries

2017 Inquiry Type	Inquiries Received		
	Customer Initiated	District Initiated	Total
LEAK Communications identified as "Leak" are generated by the customer based on their knowledge or suspicion of a leak or notifying the District that they have fixed a leak. District customer service will note the situation and may provide information on how a customer can identify a leak within their system. In some situations, a field service representative will assist the customer at their residence.			
LEAK TOTAL	**83**	**0**	**83**
PRESSURE Calls regarding pressure are also generated by the customer. The inquiry may be requesting information on their pressure or indicating a change in their water pressure. District customer service and/or field service representatives may provide general information on pressure expectations in the area, and also describe what the customer can look for in their system that might explain or be the cause of a pressure change, such as a malfunctioning individual pressure reducing valve. If there has been specific work on the water system in the area during the time of the pressure issue, that information will be provided as well.			
PRESSURE TOTAL	**56**	**0**	**56**
BACKFLOW The District's AMI meters can detect flow that appears to be flowing from the customer's side of the water meter towards the District's water main. When these situations are noted in an alert to the District, they are investigated by the District to verify whether this is accurate, determine what the cause, and stop the potential cross-connection situation.			
BACKFLOW TOTAL	**0**	**12**	**12**
WATER QUALITY Water quality questions are all generated by customers. These calls are most frequently directed to the Field Service Superintendent for review and may be forwarded to the Water Operations team if it appears to require additional investigation and potential action, such as flushing a water main. In some situations, water samples may be taken as well.			
Color	16	0	16
Taste/Smell	17	0	17
Other	9	0	9
WATER QUALITY TOTAL	**42**	**0**	**42**
SHUT OFF/TURN ON REQUEST Customers may contact the District to shut off their water at the meter. The remainder of the calls are for requests to turn on a meter that has been previously shut-off.			
SHUT OFF/TURN ON TOTAL	**19**	**0**	**19**

Table 6-32 (cont.)
Customer Complaints and Inquiries

2017 Inquiry Type	Inquiries Received		
	Customer Initiated	District Initiated	Total
METER Inquiries regarding meters have to do with a problem with the meter itself including AMI appurtenances, the meter box or the area directly around the meter. The AMI system report and District discoveries in the field account for about half of these reports. The other half are customer reports of problems. Examples include broken or damaged meter boxes or frozen or other meter damage. The District does a field visit to determine how to rectify the situations. Customers may also call to find out where their meter is located. These may be answered over the phone, or in the field if the customer is not able to locate the meter based on verbal directions only. If the call is associated with a potential project where the customer will be digging, the District will advise them to call the One-Call system before digging.			
Meter/Setter Problem or Repair	0	86	86
Miscellaneous / Unknown	84	0	84
Locate Request	6	0	6
METER TOTAL	**90**	**86**	**176**
FACILITY PROBLEM Facility problems are most frequently reported by a customer, and the report may be for a situation that does not involve their water service, such as a fire hydrant. These are most frequently reviewed through a field investigation by District personnel.			
Water Facility	13	0	13
AMI Facility	3	3	6
FACILITY PROBLEM TOTAL	**16**	**3**	**19**
GRAND TOTAL	**3,219**	**2,753**	**5,972**

6.9 Recordkeeping

In accordance with WAC 246-290-480, the District maintains records of its operations and water quality analyses. A summary of the types of information kept and the length of time these records are retained is presented in Table 6-33.

Table 6-33
Record Keeping

Item No.	Type of Record	Minimum Retention Period	Record Manager	Record Use
1	Bacteriological sample analysis	5 years	Operations Administrative Assistant + Lead Water Technician	Consumer confidence report
2	Chemical analysis results including lead and copper sampling results	As long as water system is in operation	Operations Administrative Assistant	Compiled in table, provided to customers upon request Preparation of annual Consumer Confidence Report
3	Chlorine residuals	3 years	Operations Administrative Assistant	State Department of Health (DOH) report
4	Fluoride levels	3 years	Operations Administrative Assistant+ Lead Water Technician	State DOH report
5	Daily source meter readings	10 years	Operations Administrative Assistant + Operations Analyst	State Department of Ecology verification of water usage rights
6	Other records of operation and analyses as may be required by DOH	3 years	Operations Administrative Assistant	As required
7	Records of action taken by the system to correct violations of primary drinking water standards, including copies of public notifications	3 years after last corrective action	Operations Administrative Assistant + Operations Manager	DOH verification of public notification

Table 6-33 (cont.)
Record Keeping

Item No.	Type of Record	Minimum Retention Period	Record Manager	Record Use
8	Written reports, summaries, or communications relating to sanitary surveys or SPIs of the system	10 years	Operations Administrative Assistant + Water Superintendent	DOH verification that system is sanitary
9	Project reports, construction documents, and related drawings, inspection reports and approvals, Construction Completion Reports	Life of the facility	Engineering Department in project files; as-built drawings + Operations Department + IS Manager	As-built transfer to mapping system by GIS Locating existing facilities Future designs

Operations and maintenance manuals for the District's wells, treatment plants, booster pump stations and emergency generators are stored in the District's library and at each facility. Historical water quality information is stored in hard copy books. Current water quality information is stored both digitally and in hard copy format.

Copies of reports such as the Comprehensive Water Plan, Wellhead Protection Program, water supply evaluations, neighboring water system comprehensive plans, and other governmental agencies' comprehensive planning documents are stored in the District's library.

The District uses the Docuware system to electronically store and retrieve project-related information. Using this system, information relating to a facility may be retrieved through the District's computer system. The information is scanned, its accuracy and completeness are verified, and it is indexed by project or facility. The scanning of documents to the Docuware system is in progress.

6.10 Reporting

The District is required to report to DOH within 48 hours if the District fails to comply with primary water quality standards, fails to comply with monitoring requirements, or if there is a violation of the primary maximum contaminant level (MCL). Monthly reports are submitted to DOH by the tenth day of the following month and water facility inventory (WFI) forms are submitted annually. In addition, updated WFI forms must be

submitted within 30 days of any change in name, category, ownership, or responsibility for management of the water system, or any addition of source or storage facilities. Daily source meter readings and annual water production records for each source must be made available to Department of Ecology on request. Results of monitoring for unregulated volatile organic compounds (VOCs) will be sent to DOH within 30 days of receipt of the analytical results.

Special reporting requirements apply to bacteriological samples. The District will notify DOH:

- Within 10 days of notification by the laboratory if coliform is found in a sample
- By the end of the business day in which notification is received from the laboratory that fecal coliform or Escherichia coli (E. coli) is found in a sample
- Within 24 hours of determining acute coliform MCL violations (fecal coliform or E. coli present in repeat sample)
- By the end of the next business day of determining a non-acute coliform MCL violation (i.e., more than 5 percent of samples show presence of coliform)

Public notification of an MCL violation, monitoring requirements, analytical requirements, or a DOH order will be in accordance with WAC 246-290-495.

6.11 Operation and Maintenance Improvements

As new supplies and facilities are introduced into the District's water system, their introduction will require some additional modifications and additions to the Operation and Maintenance Section of the Water Plan. Table 6-34 outlines the potential changes.

Table 6-34
Operation and Maintenance for System Growth

Facility	Tasks
Water Distribution System/Conveyance	Maintain additional mainline piping and attributes installed. These additions are most frequently the result of land development.
Sampling	Additional sampling to meet comprehensive monitoring requirements.
Wells	Maintain new wells (to be constructed if the ASR program or new water rights indicate a need).
Booster Pump Station	Maintain new booster pump stations.
Reservoirs	Maintain new reservoirs if required by growth or operational decisions.

Table 6-34 (cont.)
Operation and Maintenance for System Growth

Facility	Tasks
Treatment Systems	Maintain expanded sodium hydroxide, chlorine, fluoride and manganese filtration at treatment plants. Potential modification of certain treatment systems, particularly for corrosion control systems.
Cross-Connection Control	Maintain expanded Cross-Connection Control Program.
Computerized Maintenance Management Program	Maintain and expand CMMS program, including continued population of data to system, and development of associated asset management system.
Administration	New activities will result in extra administrative work. Additional filing, recordkeeping, and customer contact is required. Maintain records for cross- connection control, treatment facilities, and water quality monitoring.

* See Table R-1 for a detailed description of tasks for the conveyance, wells, booster pump station, and reservoirs.

6.12 Water Shortage Response Plan

The District has prepared a Water Shortage Response Plan (WSRP) that provides systematic responses and methods to reduce customer water demand due to a water supply shortage from an emergency, drought event, or operational situation. Interested parties may review a complete copy of the WSRP at the main offices of the District, or on the District website as Appendix S of this document.

The objective of the WSRP is to establish actions and procedures for evaluating supply options and managing water demand during a water supply shortage. The WSRP should only be implemented during infrequent and unusual events, and it is not a substitute for the development of water supply projects and conservation programs. The WSRP establishes strategies in advance of actual conditions. The District is prepared to maintain essential public health and safety, and minimize adverse impacts to residents and businesses, should a water shortage event occur.

The WSRP was originally developed in January 2001 in response to an anticipated drought that occurred later that year. Development of the 2001 WSRP drew from information contained in other area Water Shortage Contingency Plans and utilized information from the Washington Department of Health's "Guidelines for the Preparation of Water Shortage Response Plans."

In 2001, the District also created a Water Conservation Task Force that activates as necessary to examine water supply and demand issues, develop criteria for implementation of the WSRP, develop water use reduction goals, and apply water use

reduction methods. During water shortage events, the District forms a Water Conservation Task Force to coordinate the short-term water shortage response.

When the District identifies that a water shortage situation is imminent, the Board of Commissioners may direct the Task Force to implement the WSRP. Plan activations have occurred as follows:

- 2001 – District wide, elevated to Stage 3, Mandatory Restrictions
- 2003 – Cascade View Zone only, elevated to Stage 2, Voluntary Conservation
- 2004 – Cascade View Zone only, elevated to Stage 3, Mandatory Restrictions
- 2005 – District wide, elevated to Stage 1, Advisory Stage
- 2015 – District wide, elevated to Stage 2, Voluntary Conservation in conjunction with Cascade Water Alliance.

The District has its own independent supply served by groundwater from 12 wells. The system is separate from the regional system and provides redundancy. In some instances, water shortages affecting regional supplies may not affect the District's groundwater supply resources. Over the last few years the District has received between 10% - 20% of its water supply through the regional surface water supply managed by the Cascade Water Alliance ("Cascade"). Cascade manages a contract with Seattle Public Utilities on behalf of its members to use water from the regional supply system.

Cascade has a Shortage Management Plan (SMP) that Cascade activates on behalf of its members when regional water supplies reach trigger points indicating an impending water shortage. Cascade describes member obligations in Section 3.4 of the SMP:

> **3.4 Applicability to Cascade Members**
> Consistent with the Section 7.3 of the Joint Agreement, activation of the SMP applies to Cascade Members as follows:
> - **Members receiving all of their water supply from Cascade:** Required to comply with Cascade's SMP.
> - **Members receiving partial supply from Cascade:** Required to comply, in portions of their service areas that receive regional supply; *or* to discontinue use of Cascade supply during the water shortage.
> - **Members not receiving Cascade supply.** Not required to comply with Cascade's SMP.
> - **Members with interruptible supply**. *None at this time*.

The District's WSRP was revised in April 2017 to reflect changes in the District's water supply situation, including the addition of water shortage plan information from the Cascade SMP.

The WSRP provides approaches that can be tailored to specific water shortages. The responses become more assertive as conditions become progressively more serious. These responses are presented in four stages, Advisory, Voluntary, Mandatory and Rationing:

1. Advisory – District informs customers as early as meaningful data is available that water supply and demand conditions may result in a less than normal supply of water.
2. Voluntary – District relies on the voluntary cooperation and support of customers to meet water use reduction goals.
3. Mandatory – District requires customers to implement water-saving measures to meet the District's reduced consumption goal.
4. Rationing – District requires extraordinary levels of reduction to ensure that demand does not exceed supply and that public health and safety are not compromised.

A menu of water use reduction measures has been developed for each WSRP Stage. Actions to respond to the specific water shortage situation can be tailored through choices within the menus. More severe stages build on previous stages. Objectives and actions from less severe stages would all be considered for implementation with a more severe stage. During a water shortage situation, the Task Force will provide a recommendation for specific implementation of the WSRP to the General Manager and Board of Commissioners.

Water supply shortages arise from three primary causes – an emergency, a drought event, or an operational situation:

Emergencies. Water shortage emergencies could potentially occur when there is damage to major infrastructure that in turn affects water supply, storage or distribution to customers' homes and businesses. Response to this type of emergency includes reestablishing water for basic domestic uses as well as for fire protection. The District's *Emergency Response Plan* should be used during any water supply shortage due to an emergency. The Emergency Response Plan includes procedures to follow during an incident to reestablish normal water and sewer system operations.

***Droughts*.** Droughts are naturally occurring but unpredictable weather events of varying frequency, duration and severity. Available regional data indicate that a low probability of a multiple year drought exists in our region. This data includes weather records collected for the past century, tree ring analysis, and soil sampling.

Operational Situations. An Operational Situation requiring implementation of the WSRP can occur when a critical link in the District's system is not available for service. The inability to operate a portion of the water system at full capacity may result in a situation where there is a need to achieve a significant water use reduction, but over a limited period. The affected critical link could be a storage tank, well, booster pump, treatment system, telemetry system or transmission facility.

Conservation versus Curtailment

There are important differences between long-term conservation programs and curtailment of water use during a water shortage situation. During a water shortage situation, staff designs actions that quickly reduce water use, are relatively short-lived,

and usually involve some tradeoffs or hardships for customers. Conservation programs, on the other hand, are long-term programs structured to encourage customers to reduce water waste and increase water efficiency in a sustainable manner. Some conservation programs offer financial incentives for implementing water conservation, such as the District's commercial irrigation audit program. The focus of the public message and information strategy is different for water shortage and conservation programs. The long-term conservation message of encouraging an environmental ethic and saving money shifts during water supply shortage situations to a more urgent message. However, conservation methods included in the Conservation program may be promoted as part of the strategies employed during a water supply shortage situation.

Measuring reduction goals

Historically, the District has evaluated the success of curtailment efforts through review of operational pump logs as well as bi-monthly customer consumption records. District staff anticipates that the new Automated Metering Infrastructure (AMI) software will give District staff a greater ability to monitor customer consumption, identify water waste during plan activations and quickly notify customers of water loss through leaks or through excessive water use.

This page intentionally left blank.

This page intentionally left blank.

7. Distribution Facilities Design and Construction Standards

Table of Contents

7.1 Project Review Procedures 7-1
7.2 Policies and Requirements for Outside Parties 7-1
7.2.1 Developer Extension Agreement.....7-1
7.2.2 Pipe Looping Requirements.....7-3
7.2.3 Fire Flow 7-3
7.2.4 Other Requirements.....7-3
7.3 Design Standards.....7-4
7.3.1 Water Service Pressure 7-4
7.3.2 Pipeline Velocities.....7-4
7.3.3 Pipelines 7-4
7.3.4 Storage Tanks.....7-5
7.3.5 Booster Pumps 7-5
7.3.6 Pressure-Reducing Valve Stations 7-5
7.3.7 Valves 7-5
7.3.8 Hydrants.....7-6
7.4 Construction Standards 7-6
7.4.1 Ductile-Iron Pipe.....7-6
7.4.2 Polyvinyl Chloride Pipe 7-6
7.4.3 High-Density Polyethylene Pipe..... 7-7
7.4.4 Valves 7-7
7.4.5 Backflow Prevention Assemblies 7-8
7.4.6 Fire Hydrants 7-8
7.4.7 Pipe Laying 7-8
7.4.8 Connection to Existing Main.....7-8
7.4.9 Water Service Connections.....7-9
7.4.10 Fire Hydrant Installation 7-9
7.5 Construction Certification and Follow-Up Procedures 7-9
7.5.1 Hydrostatic Tests 7-9
7.5.2 Sterilization and Flushing of Water Mains 7-10
7.5.3 As-Builts.....7-10
7.5.4 Notice of Completion.....7-11

Tables

Table 7-1 Service Area Governing Fire Guidelines.....7-4

This page intentionally left blank.

7. Distribution Facilities Design and Construction Standards

The Sammamish Plateau Water and Sewer District (District) facilities were built to meet the District's design standards, which are regularly reviewed and updated to incorporate new technology and products to ensure the installation of high-quality, efficient facilities. Staff members from each District department meet monthly to review the design standards and new products and installation techniques, as well as changes in the International Building Code, International Fire Code (IFC) and Uniform Plumbing Code. The District issues new design standards every five years (see Appendix F). This chapter provides a general description of the District's review procedure, policies and requirements, and design and construction standards.

7.1 Project Review Procedures

The District has a formal review process that is used to review all projects. When a project is submitted, District engineering staff reviews the documents (reports/drawings) for compliance with the District's technical specifications as well as with the standards of the Cities of Sammamish and Issaquah, and King County. Projects designed or prepared by District staff are reviewed by the Engineering Manager. After District staff review comments have been addressed and the documents have been found to be in compliance with the above-referenced standards, the Engineering Manager then conducts a final review of the documents. On completion of the final review, the General Manager signs and approves the project.

The District provides project reports and construction documents to DOH for review and approval prior to installation or construction of water system extensions or improvements (per WAC 246-290-110 and 246-290-120), except for distribution main related projects, for which the District requests exemption from the submittal requirements (per WAC 246-290-125, regarding project report and construction document submittal exemptions).

7.2 Policies and Requirements for Outside Parties

7.2.1 Developer Extension Agreement

This section presents a summary of the Developer Extension Agreement (DEA) procedure, from inception to completion. The District has a DEA Booklet that is available to developers and that is included in its entirety in Appendix I. The DEA is also located on the District's website, and the most up to date copy can be obtained on-line.

Preliminary Fee Phase. Once a DEA application has been submitted, the District calculates equivalent residential units (ERUs) and checks for compliance with the District's comprehensive plans. The developer is at that time responsible for paying the preliminary/certificate fees which include the partial General Facility Charges and the Development Services Deposit. The DEA is approved by the District Commissioners by

resolution. The developer may obtain completed Certificates of Water and/or Sewer Availability from the District following such approval.

Design Phase. After the preliminary fees have been paid, a predesign meeting is conducted to discuss the District's standards and the developer's preliminary design. The District reviews the submitted drawings for compliance with District technical specifications. The District also addresses the issues of fire flow, pipe looping, and other local or regional requirements. After the final plans are approved, the developer pays the remaining General Facility charges. The developer submits Mylar™ copies of the plans to be signed by the General Manager and submits four copies of the drawings to the District for use during construction and for submittal to permitting agencies. The District then submits the necessary copies to King County, the City of Sammamish or the City of Issaquah for a right-of-way permit, to the State Department of Ecology (DOE) and King County for sewer approval, and to DOH for water approval if the project is not exempt from DOH review.

Preconstruction Phase. After receiving the necessary approvals and permits from the District and the applicable permitting agencies, the District conducts a preconstruction meeting with representatives from the District, the developer, and the general contractor. The preconstruction conference checklist is provided to all attendees. Offsite easements, material and equipment submittal list, certificate of insurance, and the performance guarantee are items required to be submitted and approved by the District prior to the preconstruction conference.

Construction/Final Acceptance Phase. The contractor must notify the District 48 hours before the start of construction. District inspectors visit the site regularly during the construction phase to ensure that the facilities are constructed in accordance with District standards and the District-approved plans. Where technically feasible, all new water system components are constructed separately from the District's existing system. Prior to connection to the District's existing system, the District's inspectors perform purity and pressure tests. Once those tests are completed successfully, the contractor connects the new facilities to the District's existing system under the condition of full-time District inspection. The District's inspectors provide a final inspection on the newly installed system, and provide the developer with a punchlist of items to be completed as part of the final inspection. The Developer Extension Construction Field Final document is completed by the District Inspector. After the work identified on the punchlist inspection report has been completed and approved, the project is deemed final. The developer is responsible for submitting the as-built drawings including contractor markups and survey as-built information. The developer is responsible for submitting the necessary easement documents and a copy of the development documents to be recorded with the applicable land use agency. The developer also must provide the District with the Bill of Sale and the Final Cost Summary for the project, pay the final acceptance fees, and provide a Maintenance Guarantee. After receiving the final acceptance fees, the District sends a letter to the County Health Department, Department of Developmental Services, the City of Sammamish or the City of Issaquah, stating District acceptance. The District's Project

Manager completes the “Construction Completion Report Form for Submittal Exception Process” and files it with the project.

Two-Year Post-Acceptance Warranty Phase. Approximately twenty-three months after the final inspection the District performs a Maintenance Guarantee Inspection. If final paving or other surface improvements have not been completed at the time of the District’s acceptance of the facilities for use, the Warranty Phase may extend for longer than two years. The two-year period will not start until the surface improvements have been completed. After completion of the inspection and the repair of any deficient items, the District releases the Maintenance Guarantee to the developer.

7.2.2 Pipe Looping Requirements

The District does not permit dead-end pipelines except in certain cul-de-sac streets. If dead-end pipelines are allowed, blow-offs are required at the end of the main. The District requires pipe looping for three primary reasons: water quality, distribution redundancy, and improved fire flow. Pipe looping assists in maintaining good water quality because the water does not become stagnant in the line. The distribution redundancy feature enables the District to limit the number of customers affected in cases of waterline breaks, emergencies, and shutdowns. The pipe looping configuration allows for increased fire flow to the area.

7.2.3 Fire Flow

The fire flow requirements within the District’s service area are based on the requirements of the local land use authority. Historically the county and cities (and in turn the fire districts serving those areas) referenced the Insurance Services Office (ISO) *Guide for Determination of Required Fire Flow.* Previously all the agencies followed the ISO publication, except for the King County Fire Marshal. In unincorporated King County, a modified ISO has been used with different hydrant and flow requirements. The county and cities have or are transitioning to the requirements of the 2015 IFC, Appendix B, *Fire Flow Requirements for Buildings*. A summary of the fire districts and their requirements are shown in Table 7-1.

7.2.4 Other Requirements

The District requires compliance with the current standards of the International Building Code (IBC), International Fire Code (IFC) and Uniform Plumbing Code (UPC), Washington State Administration Code (WAC), American Water Works Association (AWWA) Standards, Washington State Department of Transportation (WSDOT)/American Public Works Association (APWA) specifications, and DOH Guidelines.

Table 7-1
Service Area Governing Fire Guidelines

Fire District	Fire Flow Guidelines
Eastside Fire and Rescue	2015 IFC, Appendix B
Redmond Fire Department (King County Fire District #34)	2015 IFC, Appendix B
Fall City Fire Department (King County Fire District #27)	2015 IFC, Appendix B
Duvall Fire Department (King County Fire District #45)	2015 IFC, Appendix B
King County Fire Marshal	Transitioning from Modified ISO Publication Guidelines to 2015 IFC, Appendix B

7.3 Design Standards

The District has developed general standards of design (see Appendix F). This section summarizes the general standards associated with the design of water systems.

7.3.1 Water Service Pressure

The District strives to maintain a minimum pressure of 30 psi during peak hour demand conditions and normal operation. The minimum pressure shall be 20 psi during a fire flow emergency condition. The maximum service pressure at any meter shall be 115 psi during normal operating conditions. Exceptions to this maximum pressure may be approved on an individual project basis, particularly in response to developer requests.

7.3.2 Pipeline Velocities

The maximum pipeline velocity allowed by the District during peak hour demand operating conditions is five feet per second (fps). The maximum velocity allowed during a fire flow emergency shall be eight fps.

7.3.3 Pipelines

The minimum pipe diameter permitted by the District shall be 8 inches, although a 4-inch diameter pipeline may be allowed in certain cul-de-sac streets or in other similar circumstances. The exception to this is that no water main serving the City of Issaquah residents shall be less than 8 inches in diameter, in accordance with the City of Issaquah standards. For non-single family residential developments, the minimum line size shall be 12-inch diameter unless the requirement is waived by the District. Transmission mains shall be a minimum 12-inch diameter pipe. All pipes shall be cement-lined ductile iron, Class 52, wrapped with a polywrap material that conforms to

AWWA C-600. The cover over the top of the pipeline shall be a minimum of 36 inches. The minimum separation between the water main and the sanitary sewer shall be in accordance with the criteria set forth in DOE and DOH guidelines. Separation between the water main and storm sewer, underground power, gas, telephone, or cable shall be three feet horizontally.

7.3.4 Storage Tanks

The storage volume requirement shall be at a minimum in compliance with DOH standards. Storage requirements for fire protection are generally based on the standards established by the ISO. The required storage volume for fire suppression shall be stored above an elevation that will produce a minimum pressure of 20 psi at any place in the system.

7.3.5 Booster Pumps

Booster pump stations shall contain a minimum of two pumps each that are each capable of pumping the design flow for the pump station. A booster pump station with multiple pumps shall be capable of pumping the design flow for the pump station when the largest pump is out of service. The rate of pumping shall be sufficient to provide the required flow at the maximum day rate or fire flow, whichever is greater. A booster station required for primary water supply shall be provided with auxiliary power, unless a redundant power supply is provided.

7.3.6 Pressure-Reducing Valve Stations

Pressure-reducing valve (PRV) stations shall be sized for the greater of the maximum day demand or the required fire flow. When PRVs are located where storage is available, the settings should be set so that the PRV will open only in emergency situations. PRV stations shall be used to reduce the hydraulic gradient from one pressure zone to another within the District.

7.3.7 Valves

The District requires gate valves on all water mains less than 12 inches in diameter. Butterfly valves shall be installed on all water mains with a diameter of 12 inches or more. Valves shall be located at a minimum of every 800 feet in residential areas (500 feet in commercial areas), with full valve clusters provided on all major waterline intersections. The valves enable the District to serve waterlines from alternate directions in a looped system, while isolating a section of water main for maintenance, repair, or extension. The District requires blow-offs at the end of all dead-end mains, and 2-inch air/vacuum release valves shall be installed on pipelines with a diameter of 8 inches and larger at all high points in the system.

7.3.8 Hydrants

The District requires the standard 5-1/4-inch main valve opening fire hydrants approximately every 700 feet in rural areas, every 500 feet in urban areas, and every 300 feet in commercial areas. The King County Fire Marshal's Office, City of Sammamish or Issaquah Fire Marshal shall approve the location of the fire hydrants, and the Fire Marshal's approved print shall be submitted to the District. The fire hydrant shall be affixed with the required Storz fitting. The District allows up to 50 feet of 6-inch-diameter pipe run from the water main to the fire hydrant. If the pipe run is greater than 50 feet, the pipe diameter shall be increased to 8 inches. Hydrant guard posts shall be required wherever their installation does not violate the King County, City of Sammamish or City of Issaquah Road Standards for obstacle placement. A minimum of two, and a maximum of four, may be required for each hydrant.

7.4 Construction Standards

The District's construction standards are in accordance with, and as recommended in, the applicable AWWA specifications; and/or the latest edition of the WSDOT/APWA (Washington State Chapter) Standard Specifications for Road, Bridge, and Municipal Construction; and/or the 10 States Standards; and the King County Road Standards; and according to the recommendations of the material or equipment manufacturer. A complete set of construction standards is presented in Appendix F.

7.4.1 Ductile-Iron Pipe

Ductile-iron pipe shall conform to AWWA C151, Thickness Class 52. The pipes shall have cement mortar lining conforming to AWWA C104. The joints shall be mechanical joints or push- on joints and shall conform to AWWA C111.

Ductile-iron and cast-iron fittings shall conform to AWWA C110 and all fittings shall be cement mortar lined in conformance with AWWA C104. Flanged joints shall conform to ASA Standard B-16.1, Class 152 with ductile-iron followers. If restrained joints are required, the restrained joint pipe shall conform to AWWA C151, Thickness Class 52. The pipe shall be cement mortar lined in accordance with AWWA C104 and the push-on restrained joints shall conform to AWWA C111.

The District requires all ductile-iron pipes to be polywrapped. The polywrap shall conform to ANSI/AWWA A21.5/C105 (see AWWA C600).

7.4.2 Polyvinyl Chloride Pipe

Polyvinyl chloride (PVC) pipe for water service shall be used only when crossing a gas pipeline easement. The pipe shall conform to WSDOT/APWA 9-30.1(5) and any PVC pipe 4 inches or larger in diameter shall also conform to AWWA C900, Class 150.

7.4.3 High-Density Polyethylene Pipe

The District requires the use of high-density polyethylene (HDPE) pipe for water service lines. HDPE pipe shall be manufactured from a high density, extra high molecular weight pipe resin polyethylene defined by ASTM D3350 having a cell classification of 345464C as polyethylene type III, grade PE34 (PE3408). Water Service lines shall have an iron pipe size (IPS), ID ASTM D2239, with a DR 7 and have a pressure class of 250 psi.

The District also allows use of HDPE pipe for installation of water distribution piping using trenchless installation methods. The pipe material shall be high density, extra high molecular weight pipe resin polyethylene defined by ASTM D3350 having a cell classification of 345464C as polyethylene type III, (PE4710 or higher). The specified pipe must be rated for a testing pressure at least 1.5 times the working pressure. The pipe dimension ratio will be calculated for each individual project based on working pressures and installation methods.

7.4.4 Valves

Gate valves shall be epoxy coated, resilient seated with a non-rising stem. The gate valve shall have a minimum working pressure of 150 psi with a standard 2-inch operating nut and standard counterclockwise opening rotation. The District requires all gate valves to conform to AWWA C509.

Butterfly valves shall conform to AWWA C504, be rubber seated, epoxy coated, and have stainless steel bolts. The valves shall be Class 150, with O-ring type shaft seals, with a standard 2-inch operating nut and standard counterclockwise opening rotation.

Air and vacuum relief valve assemblies shall be APCO No. 143-C for 1-inch assemblies and APCO No. 145-C for 2-inch assemblies, or an approved equivalent, and equipped with a brass plug on the top service port. The valves shall conform to WSDOT/APWA 9-30.3(7).

Blow-off assemblies shall conform to the District Standard Details for Type I and II Blow-Off Assembly shown in Appendix F. All pipe and pipe fittings shall be brass (to minimize corrosion) up to the isolation valve, then galvanized piping is used between the valve and the cane assembly (to minimize risk of theft and reduce replacement cost).

Pressure reducing valves (PRVs) shall conform to the District Standard Details for PRVs shown in Appendix F. The District requires that a PRV vault meet the current District standards. For example, a 6-inch PRV station would include a 6-inch fire flow valve and a 3-inch bypass valve and be in a vault. The District requires all pipe fittings less than 6 inches in diameter to be brass and all bolts inside the vault shall be hot-dipped galvanized.

7.4.5 Backflow Prevention Assemblies

The District will only allow backflow prevention assemblies that are approved by DOH. The District also requires a Backflow Prevention Assembly Test Report to be conducted by a certified Washington State Tester prior to acceptance of the system. The backflow prevention assemblies shall adhere to WAC 246-290-490 and to District Resolution 3340, which regulates the District's Cross-Connection Control Program.

7.4.6 Fire Hydrants

Fire hydrants shall comply with AWWA C502. Fire hydrants shall have the following characteristics:

- 5-1/4-inch main valve opening with brass on brass or brass on stainless steel seating as specified for 36-inch trench
- Flanged at the ground line
- 6-inch mechanical restrained joint connections
- Two 2-1/2-inch hose connections, National Standard Thread
- 4-inch pumper connection with Seattle Standard Thread and 5-inch, 125-5 Storz fitting, except within the Fire District 27 boundary where a 4-inch Storz fitting is required
- Operating nut shall be 1-1/4-inch pentagon that opens counterclockwise
- Constructed in a fashion that the pumper connection faces the roadway
- Traffic-type dry barrel hydrant with flange construction
- Minimum of two and a maximum of four hydrant guard posts may be required for each hydrant.

7.4.7 Pipe Laying

The construction standards for laying ductile-iron and PVC pipe are as follows:

- ***Ductile-Iron Pipe***. Pipe laying of ductile-iron pipe shall conform to AWWA C600 and manufacturer's recommendations. The pipe shall not be rolled or dragged, and the pipe shall be handled in such a way to avoid damaging ends, coatings, and linings.
- ***PVC Pipe***. PVC pipe shall be bedded by hand with material containing no organic matter and no rocks larger than 3/4-inch. The District may require that the bedding material be imported and conform to WSDOT/APWA classification of bedding material, Section 9-03.16.

7.4.8 Connection to Existing Main

Connection to an existing water main can be made in three ways: end of mainline connection, tee connection by wet tap, and cut-in. All connections to the District's existing system are to be conducted with full-time District inspection and appropriate

disinfection techniques to ensure public health and safety.

- ***End of Mainline Connection.*** For the connection of a new main to the end of an existing main the District requires a mainline valve, sized the same as the mainline. Exceptions shall be considered where there is an existing valve in close proximity to the new connection.
- ***Tee Connection by Wet Tap.*** A wet tap of the main under pressure shall be used for connection where the tee connection has the same diameter as the main being tapped and the main is ductile iron, or the tee connection has a smaller diameter than the main being tapped.
- ***Cut-in.*** Cut-in connections shall be performed in cases where wet taps are not used or where crossing under an existing AC water main. The cut-in connection consists of a ductile- iron tee, valving, two 10-foot lengths of ductile-iron pipe (one on each side of the tee), and fittings to connect the ductile-iron pipe to the existing pipe.

7.4.9 Water Service Connections

Water service connections shall be installed with double-strap-type pipe saddles. The District does not allow splices or couplings in service lines. The installations of the service connections are shown in the District Standard Details in Appendix F.

7.4.10 Fire Hydrant Installation

Hydrant installation shall conform to AWWA C600 unless specifically contradicted by the detail for Fire Hydrant Assembly shown in the District's Standard Details in Appendix F. Hydrants shall be covered with a sack until operational.

7.5 Construction Certification and Follow-Up Procedures

Construction inspection procedures for District water systems include hydrostatic tests and sterilization and flushing of the water mains.

7.5.1 Hydrostatic Tests

Water main installations shall be subjected to a hydrostatic pressure test of 250 psi for a minimum of 15 minutes before leakage measurement starts. This pressure shall be held without pumping, and any leaks or imperfections found under said pressure shall be remedied by the contractor before final acceptance of the work. Leakage shall be measured by approved means in the presence of a District representative. The tests shall be made after corporation stops and service lines have been installed. All valves within the section being tested shall be open. Butterfly valves shall be tested to a pressure that is 150 psi greater than the static water pressure, with a maximum pressure of 250 psi.

The allowable leakage (in gallons per 15 minutes per 1,000 feet of pipe) during

hydrostatic tests for various sizes of pipe is shown below:

2-inch – 0.06 gallon	8-inch – 0.24 gallon	14-inch – 0.42 gallon
4-inch – 0.12 gallon	10-inch – 0.30 gallon	16-inch – 0.48 gallon
6-inch – 0.18 gallon	12-inch – 0.36 gallon	18-inch – 0.54 gallon

7.5.2 Sterilization and Flushing of Water Mains

Water mains are flushed to clean and sterilize them. Cleaning includes flushing at a velocity and volume that will remove rocks and debris from the main.

Sterilization of water mains shall be accomplished in accordance with the requirements of DOH, AWWA C601 and D105, or DOT/APWA Section 7-11.3(12) and in a manner satisfactory to the District. During pipe installation, the contractor shall install chlorine granules per manufacturer's specifications to achieve a chlorine concentration of not less than 50 parts per million (ppm). When a chlorine concentration of not less than 50 ppm has been established throughout the line, the valves shall be closed and the line left undisturbed for 24 hours. The line shall then be thoroughly flushed and water samples taken for approval by the local health agency.

If water in the main fails to pass purity tests, the following procedure shall be carried out. The section to be sterilized shall be thoroughly flushed at maximum flow prior to chlorination. Flushing shall be done in the presence of a representative from the District. Sections will ordinarily be sterilized between adjacent gate valves unless, in the opinion of the District, a longer section can be sterilized satisfactorily. Chlorine shall be applied by solution feed at one end of the section, with a valve or hydrant at the opposite end opened sufficiently to permit a flow through the section during chlorine application. The chlorine solution shall be fed into the pipeline already mixed by an automatically proportioning applicator so that it provides a steady application rate of not less than 60 ppm chlorine. Hydrants along the chlorinated section shall be opened while the chlorine is being applied until the presence of chlorine has been detected. When a chlorine concentration of not less than 50 ppm has been established throughout the line, the valves shall be closed and the line left undisturbed for 24 hours. The line shall then be thoroughly flushed and water samples taken for approval by the local health agency. Chlorination shall be repeated until water samples test satisfactory. The contractor shall exercise special care in flushing to avoid damage to surrounding property.

The contractor shall be responsible for disposal of the treated water that is flushed from the mains and shall neutralize the wastewater for protection of the aquatic life in the receiving waters before disposal of the wastewater into a natural drainage channel.

7.5.3 As-Builts

All surface features of the water system, together with the staked location of water main bends, shall be field-surveyed during construction and the information used to prepare the As-Built drawings. The surveyed locations of all features shall be shown

on the draft as-built drawings (point-plot map), and shall be in accordance with the local projection of Washington State Plane North HARN, NAD 1983, Feet. If the original design drawings were prepared in digital format using AutoCAD or other automated drafting/design software, the revisions during construction shall be incorporated onto the as-built record drawings digitally. The drawings shall be on a minimum 4-mil Mylar™ format, clearly marked in the lower right-hand corner as "As-Built". If the "As-Built" record drawing is not on the original District Approved plan, a Mylar™ of the original District approved plan shall also be provided.

The details of construction for water systems shall include, but not be limited to, the following:

- Bends—Location of bends used, or deletion of bends shown on the plans and not used.
- Meter Boxes—Changing the meter box location from one lot corner to another.
- Service Line Locations—Route the service line follows, if other than perpendicular to the street, from the main to the meter box. This is especially important in cul-de-sacs or bubbles.
- Valves—Actual constructed location of all valves.
- Fittings—Any changes to the fitting callouts on the design plans should be noted.
- Other Utilities—Crossings of other utilities and detailed locations of other utilities where they run parallel to the water main and are closer than 3 feet horizontally.
- Deep Bury of Lines—Areas where the line depth exceeds 6 feet below finished grade should be noted. The District requires that as-built drawings include profiles of the installed water facilities showing the actual depth of the water facilities throughout the project.

7.5.4 Notice of Completion

A Notice of Completion is prepared by District staff for each Developer Extension Agreement or Capital Improvement Project with water improvements. The Notice of Completion is placed in the project file for inspection by DOH as requested.

This page intentionally left blank.

CHAPTER EIGHT – CAPITAL PLAN

This page intentionally left blank.

8. Capital Plan

Table of Contents

8.1 Development of CP 8-1
8.2 Planned Projects 8-2
8.2.1 Combined Water and Sewer Projects 8-11
8.2.2 General Water System 8-12
8.2.3 Water Supply 8-13
8.2.4 Booster Pumping 8-13
8.2.5 Water Storage 8-14
8.2.6 Water Distribution System 8-16
8.2.6.1 Plateau Zone 8-16
8.2.6.2 Cascade View Zone 8-29

Tables

Table 8-1 Capital Plan (2018 – 2037) 8-4

Figures

Figure 8-1 CP - Pipe Projects - Plateau Zone 8-7
Figure 8-2 CP - Pipe Projects - Cascade View Zone 8-8
Figure 8-3 CP - Other Projects - Plateau Zone 8-9
Figure 8-4 CP - Other Projects - Cascade View Zone 8-10

This page intentionally left blank.

8. Capital Plan

This chapter describes the methodology used in developing the District's water system Capital Plan (CP), and presents the costs and schedule for projects planned for implementation annually from 2018 through 2027, and for the following ten years.

8.1 Development of CP

The CP was prepared from two primary resources. The District prepares a biannual capital plan as part of the budget process. The most recent CP covers the period 2018-2023, with emphasis on financial planning for years 2018 and 2019. That process addresses projects identified in the prior WCP, but not yet completed, and new projects identified by the District since the prior WCP. The CP was augmented with projects identified to address water system needs or deficiencies, as documented in earlier chapters of the WCP. In addition, recurring or annual capital improvement projects related to system maintenance (e.g., reservoir recoating and water main replacement programs) have been included in the list of improvements.

A 20-year implementation schedule of the projects was then developed. Generally, projects of higher priority (i.e., those that address current system needs) were scheduled for implementation within the ten-year planning horizon (2018-2027). Projects that serve anticipated future needs associated with system growth, or are less critical to system operation, were scheduled for implementation between 2028 and 2037. Detailed scheduling of the higher priority projects was based primarily upon the District's existing forecast of project implementation timelines.

Planning-level cost estimates have been developed for each capital improvement project included in the 2018-2037 CP. Generally, each project cost includes the following components:

- *Base construction cost***.** Includes all labor and material costs needed to construct a project. For pipeline and valving projects, construction costs were estimated based upon unit construction costs derived from bid tabulations for recent District projects and similar water distribution projects for other utilities in King County.
- *Sales tax***.** Calculated as 10.0 percent (the 2018 local tax rate) of the base construction cost.
- *Construction contingency***.** Considers the uncertainties associated with estimating project costs at this planning level. Calculated as 30 percent of the total of base construction plus sales tax.
- *Design engineering***.** Includes District and consultant design costs, and other related cost items, such as permitting and construction administration. For most projects, this is calculated as 25 percent of the base construction cost. However, a higher percentage of the base construction cost is used for projects with more complex design or permitting needs.

These components are combined to determine the total project-level cost estimate for a

project, as expressed in 2018 dollars[1].

Where applicable, projects with significant design costs are scheduled one year in advance of construction costs, to reflect the phasing typically used for larger projects.

The District has an Asset Management program developed using the Environmental Protection Agency (EPA) model considering the following elements; the current state or condition of the District's assets, asset performance needed to deliver the desired level of service, an assets' criticality to sustained performance and service delivery, an assets' minimum life-cycle costs, and the best long-term funding strategy to operate and renew assets. The Asset Management Plan provides the basis to project future capital replacement needs and costs to establish a reserve funding strategy based on each generation of customers paying for their current use of assets. A portion of customer rates is identified and held in the Capital Renewal Fund for the future replacement of all of the major components of the system.

The District has developed useful life estimates for major asset types. The useful life schedule, install dates and field condition assessments are used to determine the remaining useful life of major facilities. As the District's system is very young, the majority of rehabilitation and replacement of assets is not expected until at least 2075. The District reviews the assets' consequence of failure, remaining useful life/condition and replacement drivers such as growth, asset failure or level of service to determine priority and funding sources to determine when an asset should be considered for replacement.

Assets may be replaced for reasons other than their normal replacement schedule, such as a road realignment or development needs. In those situations, the capital renewal fund is only used to pay for the percentage of the asset life used prior to replacement and amount funded to date. The expected remaining life portion is paid for from operating funds.

8.2 Planned Projects

Table 8-1 presents the District's schedule of capital improvement projects (CIPs) planned for implementation between 2018 and 2037. Figures 8-1 and 8-2 indicate the locations for the pipe network improvements and future extensions in the Plateau Zone and Cascade View Zone, respectively. These projects represent the District's systematic approach to upgrading and expanding the transmission and distribution system. Developer extension and District projects in progress are also listed in Table 8-1 and presented on Figures 8-1 and 8-2. Figures 8-3 and 8-4 indicate other water facility projects, for the Plateau Zone and Cascade View Zone, respectively. Projects of a general system or District-wide nature are not indicated on the figures.

Descriptions of all CIPs are provided following the exhibits described above.

Table 8-1 identifies the following for each project:

[1] The *Engineering News Record* Construction Cost Index for Seattle for August 2018 was 11,515.

- Purpose of project: Provides the primary purpose of the project
    - Deficiency: to correct a deficiency
    - Improve: to improve overall system operation
    - O&M (Operation and Maintenance): to assist with proper maintenance
    - Growth: addresses growth and system expansion
- Funding source: The fund or funds that will pay for the project
    - WOF: Water Operating Fund
    - CRF: Capital Renewal Fund
    - LFC: Water Local Facility Fund
    - GFC: Water General Facility Fund
    - SPWJFF: Sammamish Plateau share of Joint Facility Fund (JFF) (does not include Northeast Sammamish share of JFF)
    - Other: Sources not included above, such as Grants or Developer Extension funded projects (DEAs). Note that DEA project funding does not show as "Other" until the project is approved for construction.
- Funding type: Indicates the type of project anticipated to install the project.
    - CR – Capital Replacement: CIP installation of a project replacing existing facilities representing the expended life of the project
    - LFC – Local Facility: CIP installation of a project providing local service
    - GFC – General Facility: CIP installation of storage, supply, transmission or other projects that provide shared service to large areas of the District
    - SPWJFF - Sammamish Plateau Joint Facility Fund: CIP installation of a project associated with the jointly owned 3 MG storage tank
    - DEA/ULID – Developer Extension or Utility Local Improvement District: project installed by a developer or funded by property owners assessments
- Anticipated project cost
    - Provided in 2018 dollars
    - Includes 10% Sales Tax
    - Includes 30% Construction Contingency
    - Assumes soft costs at 25% of base construction costs
- Anticipated year of completion.
    - The estimated year for project expenses or project completion.

The total cost of funding by fund type is summarized annually at the bottom of the table.

In total, the District's ten-year CP (for years 2018-2027) includes approximately $55.0 million in improvements. The long-term CP (2028-2037) includes approximately $58.6 million in additional improvements.

This page intentionally left blank.

Table 8-1
Capital Plan (2018-2037)

Project No.	Description	Funding Information			Schedule and Cost of Improvements (In dollars)													
		Purpose of Project	Project Funding Source	Project Funding Type	2018	2019	2020	2021	2022	2023	2024	2025	2026	2027	10-yr CIP TOTAL	2028-2037	20-yr CIP total	Future Projects 2038+
Combined Water and Sewer Projects - Water Share of Budget Only																		
C-1	District Headquarters Maintenance Program	O&M	WOF (60% share)	CR	30,000	113,835	30,000	30,000	30,000	30,000	30,000	30,000	30,000	30,000	383,835	300,000	683,835	
C-2	Enterprise Level System Replacement Program	Improve	WOF (60% share)	CR	15,000			120,000			45,000	45,000	45,000	45,000	315,000	450,000	765,000	
C-3	Computerized Maintenance Management System	Replace	WOF (60% share)	CR		201,000									201,000		201,000	
C-4	District Headquarters Communications Rewiring	Improve	WOF (60% share)	CR		96,000									96,000		96,000	
C-5	Miscellaneous Capital Improvement Projects	Improve	WOF (65% share)	CR		65,000	65,000	65,000	65,000	65,000	65,000	65,000	65,000	65,000	585,000	650,000	1,235,000	
C-6	Security Improvements	Improve	WOF (60% share)	CR	18,000	15,296	26,400	26,400	26,400	32,074					144,570		144,570	
C-7	Vehicles and Large Equipment (General)	O&M	WOF (60% share)	CR		20,400	20,400	34,800	3,900				18,000	24,000	121,500	48,000	169,500	
C-8	District Headquarters Facility Expansion	Improve	70% GFC, 30% WOF (50% share)	GFC, WOF			50,000			1,250,000					1,300,000		1,300,000	
General																		
G-1	AMI	Improve	WOF	CR	31,284										31,284		31,284	
G-2	Smart Water Infrastructure	Improve	WOF	CR			100,000	100,000	100,000	100,000					400,000		400,000	
G-3	Vehicles and Large Equipment (Water)	O&M	WOF	CR	100,000	290,963	431,000		109,000	215,000		87,500	230,000	103,000	1,566,463	486,000	2,052,463	111,000
G-4	Water Hydraulic Model	Growth	30% GFC 70% WOF	GFC, CR	35,836	20,000									55,836		55,836	
G-5	Water Comprehensive Plan	Growth	GFC	GFC	263,000	35,560									298,560	500,000	798,560	500,000
G-6	550 Zone Study (Conversion to Blended Supply)	Improve	WOF	CR					30,000						30,000		30,000	
G-7	700 SH Zone Study (Conversion to 550 & 590 Zones)	Improve	WOF	CR											0	30,000	30,000	
Supply																		
W-1	Well 9 Pump and Motor Upgrade for Wells 7, 8 and 9 Well Field	Improve	15% GFC, 15% WOF, 70% CRF	GFC, WOF, CR				550,000							550,000		550,000	
W-2	Well 9 PFC Treatment	Improve	GFC	GFC						4,881,000					4,881,000		4,881,000	
W-3	Well 13 Pump Enclosure	Improve	30% GFC 70% WOF	GFC, CR	20,000	382,000									402,000		402,000	
Booster Pumping																		
BP-1	SE 43rd Booster Pump Station Rehabilitation	O&M	WOF	CR											0	3,000,000	3,000,000	
BP-2	New 297 Booster Pump	O&M	30% GFC 70% WOF	GFC, CR	41,781										41,781		41,781	
n/a	Well 9 to 650 Zone Booster Pump Station (see Project M-8)	Improve	GFC	GFC											0		0	
n/a	2 MG Booster Pump Station (see Project ST-11)	Improve	GFC	GFC											0		0	
Water Storage																		
ST-1	Reservoir Safety Improvements	Deficiency	30% GFC 70% WOF	GFC, CR	72,948	327,052									400,000		400,000	
ST-2	3 MG Tank Replace Interior Coating and Exterior Top Coating	O&M	15% GFC 35% SPWJFF 50% Other	GFC, SPW JFF, Other							840000				840,000		840,000	
ST-3	3 MG Tank Replace Exterior Coating (2035)	O&M	15% GFC 35% SPWJFF 50% Other	GFC, SPW JFF, Other											0	550,000	550,000	
ST-4	Section 36 East Tank Replace Interior Coating	O&M	30% GFC 70% WOF	GFC, CR								730000			730,000		730,000	
ST-5	Section 36 East Tank Exterior Top Coating (2030)	O&M	30% GFC 70% WOF	GFC, CR											0	380,000	380,000	
ST-6	Section 36 West Tank Exterior Top Coating and Replace Interior Coating (2030)	O&M	30% GFC 70% WOF	GFC, CR											0	1,100,000	1,100,000	
ST-7	Section 36 East Tank Replace Exterior and Interior Coating (2045)	O&M	30% GFC 70% WOF	GFC, CR											0		0	1,410,000
ST-8	Section 36 West Tank Replace Exterior Coating (2040)	O&M	30% GFC 70% WOF	GFC, CR											0		0	740,000
ST-9	2 MG Tank Replace Interior and Exterior Tank Coating	O&M	30% GFC 70% WOF	GFC, CR	50,000	1,543,000									1,593,000		1,593,000	
ST-10	2 MG Tank Improvements	Deficiency	30% GFC 70% WOF	GFC, CR	200,000	1,539,000									1,739,000		1,739,000	
ST-11	2 MG Tank Booster Pump Station	Improve	GFC	GFC										475000	475,000		475,000	
ST-12	10 MG Reservoir (Future)	Growth	GFC	GFC											0		0	20,000,000
ST-13	7 MG & 297 Tank Seismic Retrofit	Improve	WOF	CR	269,045	1,010,341									1,279,386		1,279,386	
ST-14	7 MG Tank Exterior Coating	O&M	30% GFC 70% WOF	GFC, CR			980,000								980,000		980,000	
ST-15	7 MG Tank Replace Interior Coating	O&M	30% GFC 70% WOF	GFC, CR							760000				760,000		760,000	
ST-16	7 MG Tank Replace Exterior Coating (2035)	O&M	30% GFC 70% WOF	GFC, CR											0	775,000	775,000	
ST-17	297 Tank Replace Interior Coating and Exterior Top Coating	O&M	30% GFC 70% WOF	GFC, CR							610000				610,000		610,000	
ST-18	297 Tank Replace Exterior Coating (2035)	O&M	30% GFC 70% WOF	GFC, CR											0	425,000	425,000	
ST-19	Well 12 Tank Replace Interior Coating and Exterior Top Coating	O&M	30% GFC 70% WOF	GFC, CR							250000				250,000		250,000	
ST-20	Well 12 Tank Replace Exterior Coating (2037)	O&M	30% GFC 70% WOF	GFC, CR											0	215,000	215,000	
ST-21	Well 12 Reclaim Tank Replace Interior and Exterior Coating (2030)	O&M	30% GFC 70% WOF	GFC, CR											0	130,000	130,000	
Mains - Transmission and General Improvements																		
M-1	Zackuse Creek Fish Passage Culvert Main Replacement - 8"	Replace	WOF	CR	20,491	4,510									25,001		25,001	
M-2	216th Ave SE and Main Street Replacement - 8" & 12"	Improve	17% GFC 83% LFC	GFC, LFC											0	517,000	517,000	
M-3	Main Street from 216th to 218th Replacement (Flynn 218th SE Plat DEA) - 12"	Improve	17% GFC 83% LFC	GFC, DEA/ULID		200,000									200,000		200,000	
M-4	SE 8th from 212th to 218th Ave SE Replacement - 12"	Improve	17% GFC 83% LFC	GFC, LFC			728,000						362,000		1,090,000		1,090,000	
M-5	228th Avenue SE 24" Transmission Main/Replacement	Improve	GFC	GFC										934,000	934,000		934,000	
M-6	Sorrento Estates 24" Transmission Main	Improve	GFC	GFC		726,360									726,360		726,360	
M-7	Issaquah Fall City Rd 16" Transmission Main/Replacement	Deficiency	GFC	GFC	84,467	565,347									649,814		649,814	
M-8	Well 9 to 650 Zone 16" Transmission Main and Booster Pump Station	Improve	GFC	GFC		50,000		200,000							250,000	6,800,000	7,050,000	
M-9	Redmond-Fall City Rd/Ames Lake Rd 12" Transmission Main	Improve	GFC	GFC											0	3,911,000	3,911,000	
M-10	Distribution System Connectivity and Extension Program[5]	Improve	LFC	LFC											0		0	

Notes:

(1) Costs are in 2018 dollars. ENR Construction Cost Index for Seattle as of August 2018 is 11,515.
(2) Purpose of Project: Deficiency = Addresses deficiencies identified in the Water Comprehensive Plan; Improve = Does not address a deficiency, but improves overall system operation; Growth = Required to address Growth/ Expansion in the system; O&M = Necessary for proper maintenance.
(3) Funding Source: General Facility Charge (GFC); Local Facility Charge (LFC); Water Operating Fund (WOF); Capital Renewal Fund (CRF); SPW Joint Facility Fund (SPW JFF); Other - could be implemented through Developer Extension Agreements (DEAs), Utility Local Improvement Districts (ULIDs), grants or other.
(4) Funding Type: General Facility Charge (GFC); Local Facility Charge (LFC); Capital Replacement (CR); Developer Extension Agreement or Utility Local Improvement District (DEA/ULID), SPW Joint Facility Fund (SPW JFF).
(5) These are projects identified and mapped for general system connectivity and generally anticipated system extensions to serve property not yet fully developed. Projects identified in M-10 are developer funded/contributed or are funded through the Local Facility Charge and General Facility Charge fund. Costs for M-10 will be developed in future budget cycles as specific projects and funding approaches are identified.

Table 8-1
Capital Plan (2018-2037)

Project No.	Description	Funding Information			Schedule and Cost of Improvements (In dollars)													
		Purpose of Project	Project Funding Source	Project Funding Type	2018	2019	2020	2021	2022	2023	2024	2025	2026	2027	10-yr CIP TOTAL	2028-2037	20-yr CIP total	Future Projects 2038+
Mains - Fire Flow Deficiency Solutions																		
FF-1	NE 27th Pl/NE 29th St PRV Addition and Main Connection - 8"	Deficiency	LFC	DEA/ULID										848,000	848,000		848,000	
FF-2	212th Ave NE from NE 14th to NE 16th AC Replacement - 8"	Improve	WOF	CR											0	241,000	241,000	
FF-3	NE 11th St and 209th Ave Replacement - 8"	Deficiency	WOF	CR											0	669,000	669,000	
FF-4	N Inglewood Pressure Zone Modification Connection - 8"	Deficiency	CRF	CR	30,000	441,590									471,590		471,590	
FF-5	216th Ave NE PRV Addition	Deficiency	GFC	GFC										217,000	217,000		217,000	
FF-6	SE 1st St/222nd PL SE in Town Center and 228th Ave SE to Sammamish Commons Connection - 16"	Deficiency	LFC	DEA/ULID			549,000	549,000	274,500	274,500	274,500	274,500	274,500	274,500	2,745,000		2,745,000	
FF-7	Sammamish Town Center SE 4th St Replacement - 12"	Improve	6% GFC 63% LFC 5% CRF 26% WOF	GFC, LFC, CR	4,000	913,730									917,730		917,730	
FF-8	Plateau Club Replacement - 12"	Deficiency	LFC	DEA/ULID											0	53,000	53,000	
FF-9	SE 14th St Connection - 8"	Deficiency	WOF	CR											0	322,000	322,000	
FF-10	SE 16th St PRV Addition and SE 17th St Connection - 8"	Deficiency	26% GFC 74% LFC	GFC, LFC								545,000			545,000		545,000	
FF-11	Waverly Hills PRV Addition and Main Replacement - 8"	Deficiency	WOF	CR											0	2,633,000	2,633,000	
FF-12	Waverly Shores Connection - 8"	Deficiency	LFC	DEA/ULID											0	356,000	356,000	
FF-13	Overdale 232nd Ave SE and SE 54th Pl Fire Flow Connection - 8"	Deficiency	WOF	CR											0	835,000	835,000	
FF-14	NE 80th St Connection - 12"	Improve	17% GFC 83% LFC	GFC, LFC							1,283,000				1,283,000		1,283,000	
FF-15	NE 70th St Replacement - 12"	Deficiency	17% GFC 83% WOF	GFC, CR											0	1,432,000	1,432,000	
FF-16	NE Union Hill Rd and 266th Ave NE Connection - 8"	Deficiency	LFC	DEA/ULID											0	1,156,000	1,156,000	
FF-17	NE 45th St/268th Ave NE Connection - 8"	Deficiency	WOF	CR											0	1,251,000	1,251,000	
FF-18	NE 45th St/272nd Ave NE Replacement - 8"	Improve	WOF	CR											0	301,000	301,000	
Mains - Redundancy Improvements																		
R-1	NE 25th St Connection 1 (NE 25th St Assemblage DEA) - 8"	Improve	LFC	DEA/ULID			211,000								211,000		211,000	
R-2	NE 25th St Connection 2 - 8"	Improve	LFC	DEA/ULID								450,000			450,000		450,000	
R-3	NE 24th St Connection (Cedar Hill DEA) - 8"	Improve	Other	DEA/ULID			262,000								262,000		262,000	
R-4	NE 26th St Connection - 8"	Improve	LFC	DEA/ULID											0	618,000	618,000	
R-5	207th Ave NE PRV Addition	Improve	GFC	GFC											0	217,000	217,000	
R-6	NE 15th St from 207th Pl NE to 208th NE Connection - 8"	Improve	75% LFC 25% WOF	LFC, CR								139,000			139,000		139,000	
R-7	East Sammamish Park Connection - 12"	Improve	17% GFC 83% LFC	GFC LFC										612,000	612,000		612,000	
R-8	NE 14th St from 212th to 216th NE Connection - 8"	Improve	LFC	DEA/ULID											0		0	1,194,946
R-9	NE 8th St Replacement - 8"	Improve	31% LFC 69% WOF	LFC / DEA/ULID											0	228,000	228,000	
R-10	212th Ave NE PRV Addition	Improve	GFC	GFC										217,000	217,000		217,000	
R-11	236th Ct NE Connection - 8"	Improve	WOF	LFC											0	206,000	206,000	
R-12	NE 14th St Connection - 12"	Improve	17% GFC 83% LFC	GFC, LFC						274,000					274,000		274,000	
R-13	238th Ave NE Connection - 8"	Improve	LFC	DEA/ULID										228,000	228,000		228,000	
R-14	240th Ave NE Replacement (NE 8th Assemblage DEA) - 8"	Improve	LFC	DEA/ULID			521,000								521,000		521,000	
R-15	NE 4th St from 235th to 238th NE Connection - 8"	Improve	LFC	DEA/ULID											0		0	851,588
R-16	243rd Ave NE Connection - 8"	Improve	WOF	LFC											0	76,000	76,000	
R-17	NE 18th St Connection 1 (NE 18th Assemblage DEA) - 8"	Improve	LFC	DEA/ULID			366,000								366,000		366,000	
R-18	NE 18th St Connection 2 - 8"	Improve	LFC	DEA/ULID					228,000						228,000		228,000	
R-19	247th Pl NE from NE 18th to 20th Connection - 8"	Improve	LFC	DEA/ULID										312,000	312,000		312,000	
R-20	245th Ave NE Connection (Atherton-Campbell 246th NE Plat DEA) - 8"	Improve	LFC	DEA/ULID			838,000								838,000		838,000	
R-21	NE 11th St to 250th Ave NE Connection - 8"	Improve	LFC	DEA/ULID											0	748,000	748,000	
R-22	250th Ave NE from NE 14th to NE 18th Connection - 8"	Improve	LFC	DEA/ULID											0	801,673	801,673	
R-23	254th Ave NE from NE 8th to NE 4th Connection - 8"	Improve	LFC	DEA/ULID											0	681,000	681,000	
R-24	222nd Pl NE Connection - 8"	Improve	LFC	DEA/ULID											0	121,000	121,000	
R-25	NE 2nd Ct Connection - 8"	Improve	WOF	LFC											0	255,000	255,000	
R-26	208th Ave SE PRV Addition	Improve	GFC	GFC											0	217,000	217,000	
R-27	220th Ave NE Connection - 8"	Improve	LFC	DEA/ULID					343,000						343,000		343,000	
R-28	Town Center Connections NW - 12"	Improve	LFC	DEA/ULID			426,600	426,600	213,300	213,300	213,300	213,300	213,300	213,300	2,133,000		2,133,000	
R-29	Town Center Connections SW - 12"	Improve	LFC	DEA/ULID			438,800	438,800	219,400	219,400	219,400	219,400	219,400	219,400	2,194,000		2,194,000	
R-30	Town Center Connections SE - 12"	Improve	LFC	DEA/ULID			350,600	350,600	175,300	175,300	175,300	175,300	175,300	175,300	1,753,000		1,753,000	
R-31	Future Town Center School Site Connection - 12"	Improve	LFC	DEA/ULID											0	1,216,000	1,216,000	
R-32	Thirty Acres Park Connection - 8"	Improve	LFC	DEA/ULID											0	794,000	794,000	
R-33	SE 19th St and 193rd Ave SE Connection (8") and PRV Addition	Improve	41% GFC 59% LFC	GFC DEA/ULID											0	1,020,000		
R-34	SE 12th St and 208th Ave SE Connection - 8"	Improve	LFC	DEA/ULID											0	1,239,535	1,239,535	
R-35	SE 19th St and 205th Ave SE Connection - 8"	Improve	LFC	DEA/ULID											0	270,000	270,000	
R-36	SE 20th St Connection - 8"	Improve	LFC	DEA/ULID											0	168,000	168,000	
R-37	SE 24th St to 210th Pl SE Connection (Tridco SE 24th Short Plat or Baker SE 24th Short Plat DEA) - 8"	Improve	LFC	DEA/ULID			292,000								292,000		292,000	
R-38	215th SE Connection - 8"	Improve	LFC	DEA/ULID										265,000	265,000		265,000	
R-39	218th Ave SE Connection - 8"	Improve	LFC	DEA/ULID											0	498,000	498,000	
R-40	223rd Ave SE Connection (Lancaster 223rd DEA) - 8"	Improve	LFC	DEA/ULID				474,000							474,000		474,000	
R-41	226th Ave SE Connection - 8"	Improve	LFC	DEA/ULID											0	759,000	759,000	
R-42	SE 22nd St Connection - 8"	Improve	LFC	DEA/ULID											0	522,000	522,000	
R-43	239th Pl SE Connection - 8"	Improve	LFC	DEA/ULID											0	961,000	961,000	
R-44	244th Ave SE Connection - 8"	Improve	LFC	DEA/ULID											0	561,000	561,000	
R-45	247th Ave to 248th Ave SE Connection - 8"	Improve	LFC	DEA/ULID											0	191,000	191,000	
R-46	SE 13th St Connection - 8"	Improve	LFC	DEA/ULID											0	175,000	175,000	
R-47	SE 17th St to SE 14th St Connection - 8"	Improve	LFC	DEA/ULID											0	727,000	727,000	

Notes:

(1) Costs are in 2018 dollars. ENR Construction Cost Index for Seattle as of August 2018 is 11,515.
(2) Purpose of Project: Deficiency = Addresses deficiencies identified in the Water Comprehensive Plan; Improve = Does not address a deficiency, but improves overall system operation; Growth = Required to address Growth/ Expansion in the system; O&M = Necessary for proper maintenance.
(3) Funding Source: General Facility Charge (GFC); Local Facility Charge (LFC); Water Operating Fund (WOF); Capital Renewal Fund (CRF); SPW Joint Facility Fund (SPW JFF); Other - could be implemented through Developer Extension Agreements (DEAs), Utility Local Improvement Districts (ULIDs), grants or other.
(4) Funding Type: General Facility Charge (GFC); Local Facility Charge (LFC); Capital Replacement (CR); Developer Extension Agreement or Utility Local Improvement District (DEA/ULID), SPW Joint Facility Fund (SPW JFF).
(5) These are projects identified and mapped for general system connectivity and generally anticipated system extensions to serve property not yet fully developed. Projects identified in M-10 are developer funded/contributed or are funded through the Local Facility Charge and General Facility Charge fund. Costs for M-10 will be developed in future budget cycles as specific projects and funding approaches are identified.

Table 8-1
Capital Plan (2018-2037)

Project No.	Description	Funding Information			Schedule and Cost of Improvements (In dollars)													
		Purpose of Project	Project Funding Source	Project Funding Type	2018	2019	2020	2021	2022	2023	2024	2025	2026	2027	10-yr CIP TOTAL	2028-2037	20-yr CIP total	Future Projects 2038+
R-48	SE 17th St Connection (Yu SE 17th Short Plat DEA) - 8"	Improve	LFC	DEA/ULID			62,000								62,000		62,000	
R-49	SE 20th Pl from 245th to 242nd Ave SE Connection - 8"	Improve	LFC	DEA/ULID											0	409,000	409,000	
R-50	246th Ave SE to SE 17th Pl Connection (Sammamish Highlands on 248th and Hamilton Estates DEA for 246th section) - 8"	Improve	Other	DEA/ULID		151,000									151,000	612,000	763,000	
R-51	251st Ave SE to West Beaver Lake Dr SE Connection - 8"	Improve	WOF	LFC											0	323,000	323,000	
R-52	SE 29th St to SE 24th Way Connection (8") and PRV Addition	Improve	GFC	GFC											0	691,000	691,000	
R-53	SE 29th St Connection - 8"	Improve	LFC	DEA/ULID											0	662,000	662,000	
R-54	SE 28th Pl Connection - 8"	Improve	WOF	LFC											0	269,000	269,000	
R-55	SE 39th St Connection - 8"	Improve	LFC	DEA/ULID											0	830,000	830,000	
R-56	SE 29th Pl Connection - 8"	Improve	LFC	DEA/ULID											0	363,000	363,000	
R-57	221st Ave SE Connection - 8"	Improve	LFC	DEA/ULID											0	386,000	386,000	
R-58	SE 35th St Connection - 8"	Improve	LFC	DEA/ULID											0	152,000	152,000	
R-59	239th Ave SE Connection - 8"	Improve	WOF	LFC											0	474,000	474,000	
R-60	241st Ave SE Connection - 8"	Improve	LFC	DEA/ULID											0	349,000	349,000	
R-61	SE 25th St and SE Duthie Hill Rd Connections - 8"	Improve	LFC	DEA/ULID											0	1,765,000	1,765,000	
R-62	SE Issaquah-Fall City Rd Connection - 8"	Improve	LFC	DEA/ULID											0	1,419,000	1,419,000	
R-63	SE 48th St to SE 46th Alignment Connection (Hochanadel SE 48th Property - Sorrento Estates DEA) - 8"	Improve	LFC	DEA/ULID				704,000							704,000		704,000	
R-64	229th Pl SE Connection - 8"	Improve	WOF	LFC				134,620							134,620		134,620	
R-65	240th Ave SE Connection - 8"	Improve	LFC	DEA/ULID											0	101,000	101,000	
R-66	East Lake Sammamish Center North Connection - 16"	Improve	GFC	GFC				230,000							230,000		230,000	
R-67	229th Ave SE Connection - 8"	Improve	LFC	DEA/ULID											0	380,000	380,000	
R-68	East Lake Sammamish Center South Connection - 16"	Improve	GFC	GFC				489,000							489,000		489,000	
R-69	University House/Timbers Connection - 8"	Improve	WOF	LFC											0	123,000	123,000	
R-70	Dawnbreaker Cascade Intertie/Connection - 8"	Improve	GFC	GFC											0		0	1,919,000
R-71	250th and 252nd Ave NE from NE 80th to NE 85th St Connection - 8"	Improve	LFC	DEA/ULID											0	2,697,000	2,697,000	
R-72	248th Ave NE Connection - 8"	Improve	LFC	DEA/ULID											0	587,000	587,000	
R-73	254th Ave NE Connection - 8"	Improve	LFC	DEA/ULID											0	1,113,000	1,113,000	
R-74	245th Ave NE Connection - 8"	Improve	WOF	LFC											0	322,000	322,000	
R-75	NE 47th Pl and 254th Ave NE Connection - 8"	Improve	WOF	LFC											0	771,000	771,000	
R-76	NE 29th Pl Connection (8") and PRV Addition	Improve	GFC	GFC											0	739,000	739,000	
R-77	NE 24th St Amesbury Connection - 8"	Improve	LFC	DEA/ULID											0	936,000	936,000	
Mains - Projects in Progress																		
DEA/CIP	Inglewood JNT 2387 NE 15th Residence DEA - 8"	Improve	Other	DEA/ULID	88,000										88,000		88,000	
DEA/CIP	Inglewood Hill Rd at 211th PL NE Main Replacement - 8"	Deficiency	50% LFC 50% CRF	LFC, CR	57,500										57,500		57,500	
DEA/CIP	16th Sammamish II - Shillam DEA - 8"	Improve	Other	DEA/ULID	108,000										108,000		108,000	
DEA/CIP	Twins Ridge DEA - 8"	Improve	Other	DEA/ULID	698,000										698,000		698,000	
DEA/CIP	Morningside Estates DEA - 8"	Improve	Other	DEA/ULID	358,000										358,000		358,000	
DEA/CIP	Flynn 218th SE Plat DEA (onsite portion) - 8"	Improve	Other	GFC, DEA/ULID	150,000										150,000		150,000	
DEA/CIP	218th McCabe (aka Brixton) DEA - 12"	Improve	17% GFC, 83% Other	GFC, DEA/ULID	125,000										125,000		125,000	
DEA/CIP	Hennessey 222nd SE Short Plat & 218th McCabe (aka Brixton) DEAs - 8"	Improve	Other	DEA/ULID	496,000										496,000		496,000	
DEA/CIP	Village at Sammamish Town Center DEA - 12"	Improve	Other	DEA/ULID	680,000										680,000		680,000	
DEA/CIP	Town Center Plateau 120 Apartments DEA - 12"	Improve	Other	DEA/ULID	414,000										414,000		414,000	
DEA/CIP	Coffman 222nd NE Short Plat DEA - 8"	Improve	Other	DEA/ULID	231,000										231,000		231,000	
DEA/CIP	Reynolds SE 8th Short Plat DEA - 8"	Improve	Other	DEA/ULID	121,000										121,000		121,000	
DEA/CIP	Richter SE 14th Plat DEA - 8"	Improve	Other	DEA/ULID	179,000										179,000		179,000	
DEA/CIP	Sammamish Highlands on 248th DEA - 8"	Improve	Other	DEA/ULID	301,000										301,000		301,000	
DEA/CIP	Penny Lane South DEA - 8"	Improve	Other	DEA/ULID	426,000										426,000		426,000	
DEA/CIP	223rd Mullen-Warren Assemblage DEA - 8"	Improve	Other	DEA/ULID	919,000										919,000		919,000	
DEA/CIP	Providence Ridge DEA - 12"	Improve	Other	DEA/ULID	1,028,000										1,028,000		1,028,000	
DEA/CIP	Taylor SE 20th Short Plat DEA - 8"	Improve	Other	DEA/ULID	123,000										123,000		123,000	
DEA/CIP	Sienna Lane II DEA- 8"	Improve	Other	DEA/ULID	105,000										105,000		105,000	
DEA/CIP	Sunnyhills Elementary School Replacement DEA - 12"	Improve	Other	DEA/ULID	733,000										733,000		733,000	
DEA/CIP	Jarvis Estates SW DEA - 8"	Improve	Other	DEA/ULID	458,000										458,000		458,000	
DEA/CIP	Oxley SE 30th Short Plat DEA - 8"	Improve	Other	DEA/ULID	316,000										316,000		316,000	
DEA/CIP	Irons-Hedberg Issaquah-Beaver Lake Rd Plat DEA - 8"	Improve	Other	DEA/ULID	398,000										398,000		398,000	
DEA/CIP	212th Way SE Road Improvements - 8"	Improve	WOF	LFC	170										170		170	
DEA/CIP	SE 52nd at 229th SE AC Main Replacement - 8"	Improve	GFC	GFC	1,100										1,100		1,100	
DEA/CIP	221st PL SE Main Replacement - 12"	Improve	50% GFC 50% WOF	GFC, CR	301,395										301,395		301,395	
DEA/CIP	SE 62nd & 221st Pl SE Main Replacement - 12"	Improve	26% GFC 74% WOF	GFC, CR	160,065										160,065		160,065	
DEA/CIP	201 Development 9081 Redmond Ridge Short Plat DEA - 8"	Improve	Other	DEA/ULID	1,064,000										1,064,000		1,064,000	
DEA/CIP	Culbertson 252nd NE Plat DEA - 8"	Improve	Other	DEA/ULID	923,000										923,000		923,000	
	Total Forecast Project Cost Of Water System Improvements				**12,248,082**	**8,711,984**	**6,747,800**	**4,922,820**	**1,817,800**	**7,729,574**	**4,765,500**	**2,974,000**	**1,632,500**	**5,257,500**	**56,807,560**	**59,259,208**	**115,046,768**	**26,726,534**
	Sub-Total: Funded by General Facilities Charge				688,541	2,609,406	452,760	1,001,500	0	5,802,580	830,110	360,700	61,540	1,947,040	13,754,177	14,817,049	28,150,507	23,064,000
	Sub-Total: Funded by Local Facilities Charge				31,270	741,650	4,659,240	2,943,000	1,453,500	1,109,920	1,947,390	1,840,050	1,182,960	3,043,460	18,952,440	25,863,923	44,217,082	2,046,534
	Sub-Total: Funded by Water Operating Fund				1,048,571	4,722,651	1,373,800	593,320	364,300	817,074	1,274,000	773,250	388,000	267,000	11,621,966	17,498,736	29,120,702	1,616,000
	Sub-Total: Funded by Capital Renewal Fund				58,950	487,277	0	385,000	0	0	0	0	0	0	931,227	0	931,227	0
	Sub-Total: Funded by SPW Joint Facility Fund				0	0	0	0	0	0	294,000	0	0	0	294,000	192,500	486,500	0
	Sub-Total: Funded by Other including DEAs, ULIDs, grants, or other				10,420,750	151,000	262,000	0	0	0	420,000	0	0	0	11,253,750	887,000	12,140,750	0

Notes:

(1) Costs are in 2018 dollars. ENR Construction Cost Index for Seattle as of August 2018 is 11,515.
(2) Purpose of Project: Deficiency = Addresses deficiencies identified in the Water Comprehensive Plan; Improve = Does not address a deficiency, but improves overall system operation; Growth = Required to address Growth/ Expansion in the system; O&M = Necessary for proper maintenance.
(3) Funding Source: General Facility Charge (GFC); Local Facility Charge (LFC); Water Operating Fund (WOF); Capital Renewal Fund (CRF); SPW Joint Facility Fund (SPW JFF); Other - could be implemented through Developer Extension Agreements (DEAs), Utility Local Improvement Districts (ULIDs), grants or other.
(4) Funding Type: General Facility Charge (GFC); Local Facility Charge (LFC); Capital Replacement (CR); Developer Extension Agreement or Utility Local Improvement District (DEA/ULID), SPW Joint Facility Fund (SPW JFF).
(5) These are projects identified and mapped for general system connectivity and generally anticipated system extensions to serve property not yet fully developed. Projects identified in M-10 are developer funded/contributed or are funded through the Local Facility Charge and General Facility Charge fund. Costs for M-10 will be developed in future budget cycles as specific projects and funding approaches are identified.

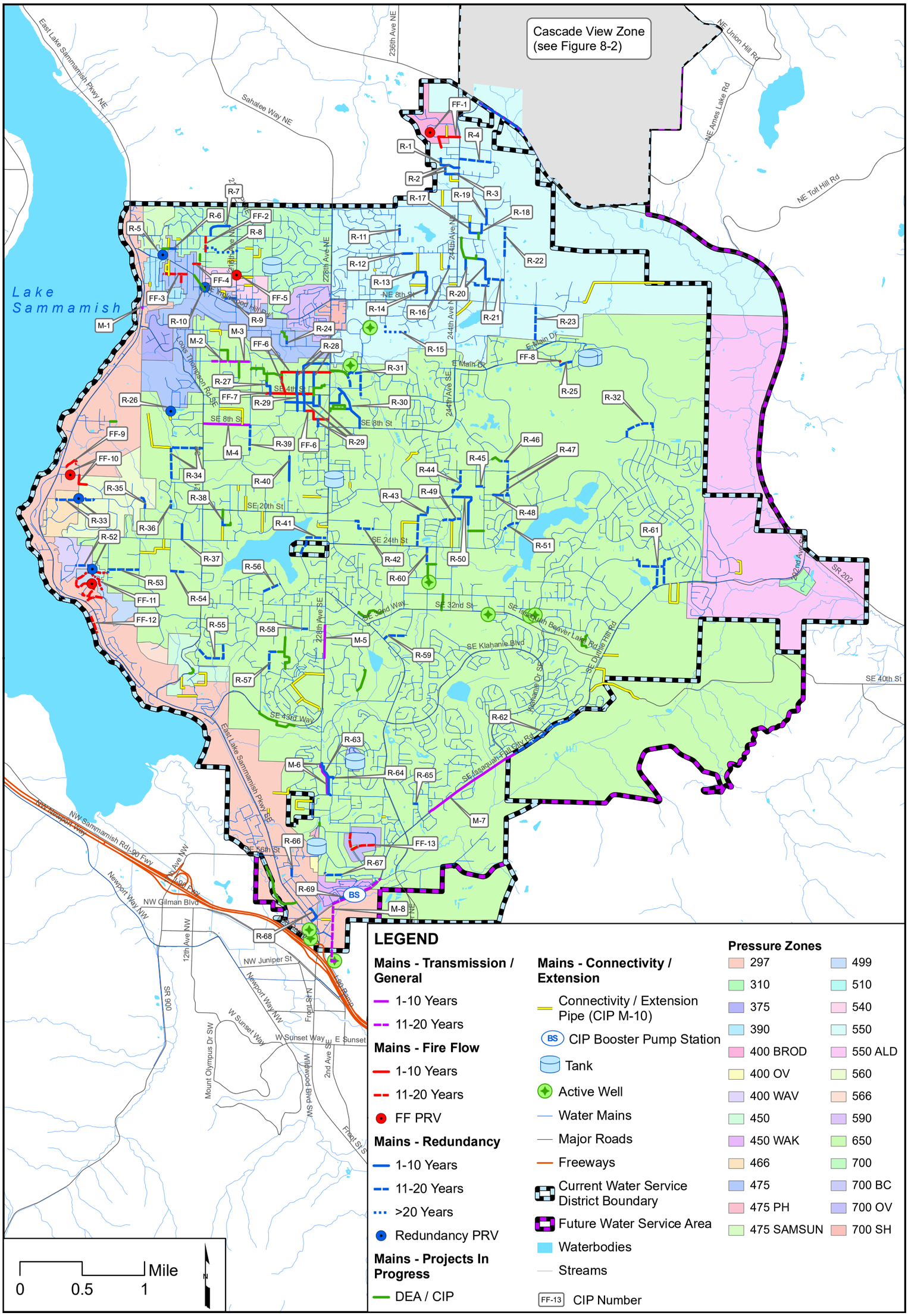

CHS ENGINEERS

Sammamish Plateau Water

CP - Pipe Projects
Plateau Zone

FIGURE 8-1

Water Comprehensive Plan

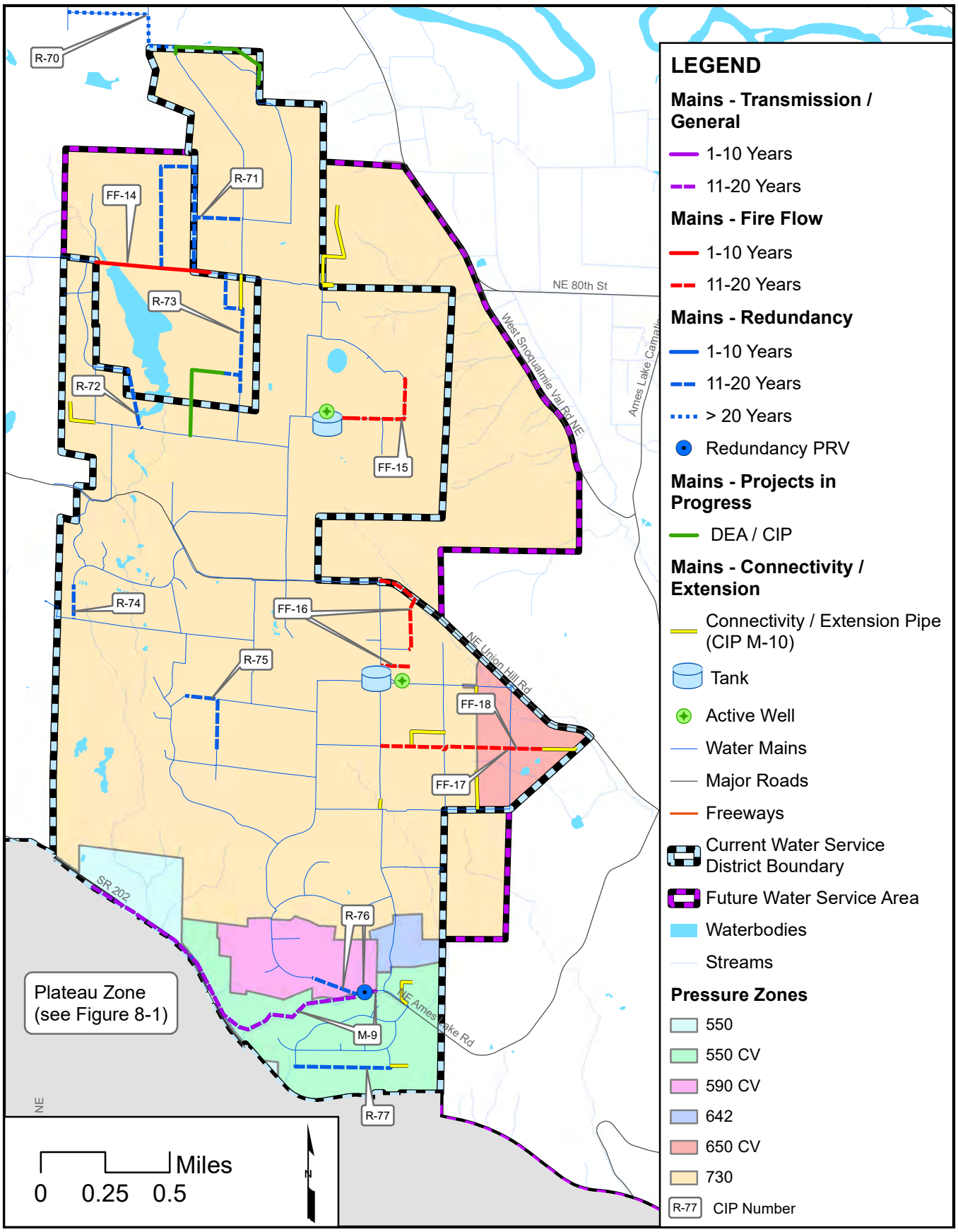

CHS ENGINEERS

Sammamish Plateau Water

CP - Pipe Projects Cascade View Zone

FIGURE 8-2

Water Comprehensive Plan

This page intentionally left blank.

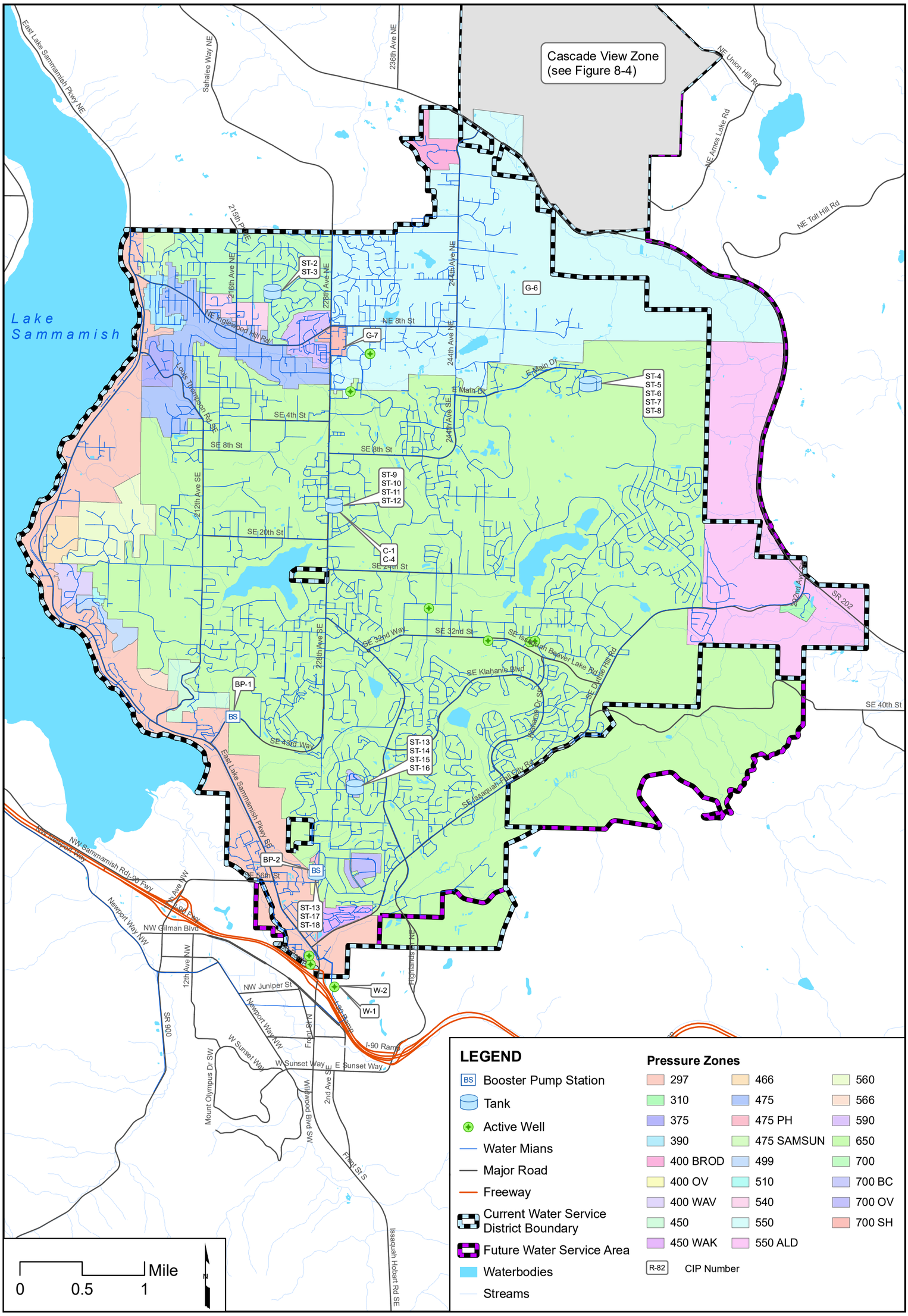

CHS ENGINEERS

Sammamish Plateau Water

CP - Other Projects
Plateau Zone
FIGURE 8-3
Water Comprehensive Plan

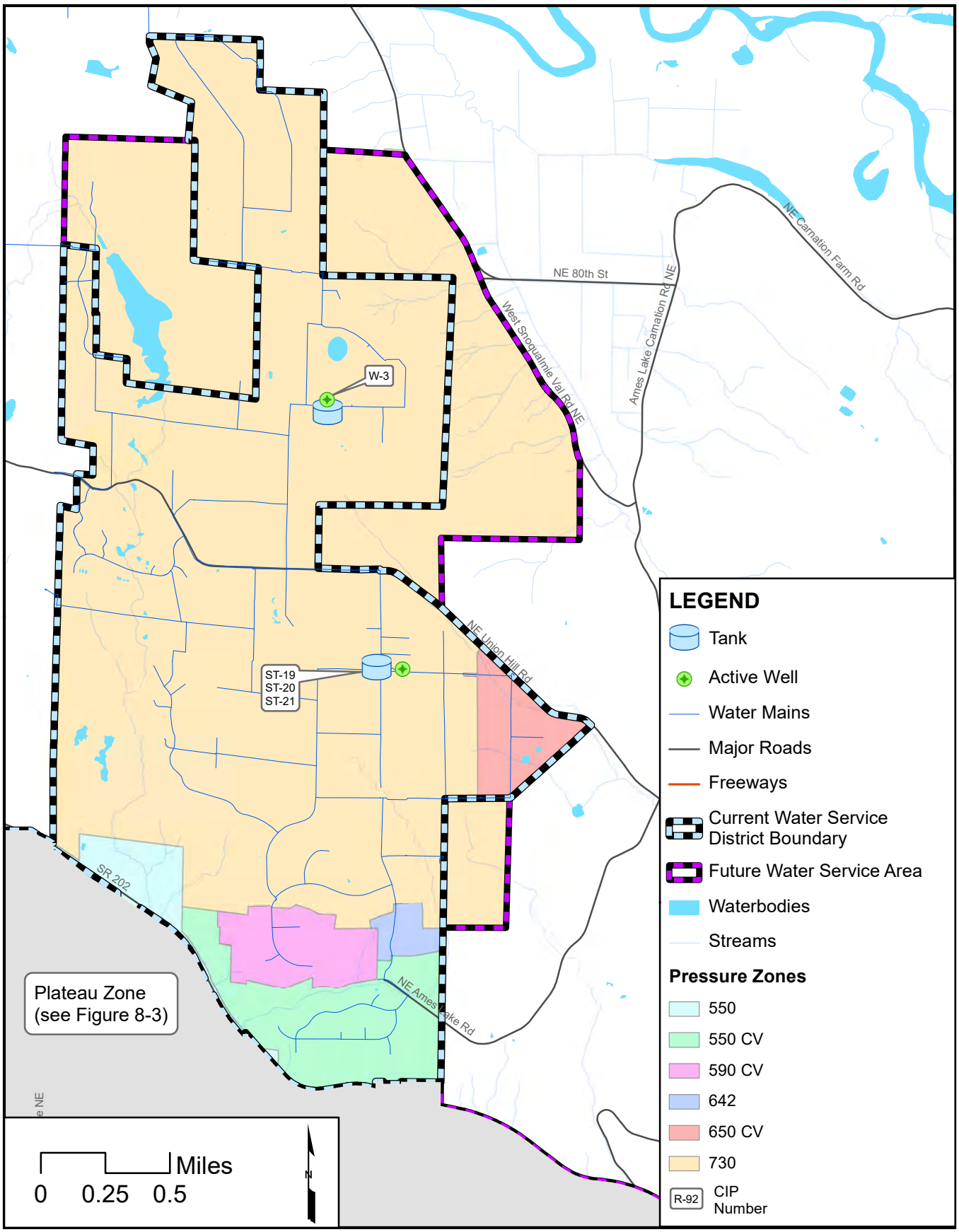

CHS ENGINEERS

Sammamish Plateau Water

CP - Other Projects Cascade View Zone

FIGURE 8-4

Water Comprehensive Plan

8.2.1 Combined Water and Sewer Projects

The District operates both a water and sewer system and each system supports programs and projects that are jointly managed and implemented for the benefit of each system. Each system supports such programs or projects in proportion to the benefit or size of each system. The values indicated in Table 8-1 are the water system share of the combined project total cost.

- **C-1 District Headquarters Maintenance Program.** This program covers building and grounds maintenance and upgrade projects. Outdoor grounds projects include parking lot seal coating and striping and gate replacement. Building projects include skylight and carpet replacement and exterior building paint. The water system funds 60% of the combined project cost.

- **C-2 Enterprise Level System Replacement Program.** This program includes replacement of computer software and hardware to support work plans and daily functions, which will be able to integrate with other District administration programs. Future program upgrades would include utility billing and financial, human resources, payroll, and project accounting software. The water system funds 60% of the combined project cost.

- **C-3 Computerized Maintenance Management System.** This program will implement a new computerized maintenance management system. The new system will be integrated with the District's asset management and customer service programs to guide the system operators for implementation of pro-active maintenance of District's assets. The water system funds 60% of the combined project cost.

- **C-4 District Headquarters Communications Rewiring.** This project will complete upgrades throughout the 20-year old headquarters building to replace and/or enhance communication systems wiring to current technology and standards. The water system funds 60% of the combined project cost.

- **C-5 Miscellaneous Capital Improvement Projects.** This program covers projects which are identified after the WCP, Capital Plan and annual budget are approved, originating from local needs, projects by other jurisdictions, and/or from operational necessity. Project expenses are transferred to identified projects once the project charter is complete. The water system funds 65% of the combined project cost.

- **C-6 Security Improvements.** Security measures at several locations are planned to reduce the vulnerability of the District's system. The installation of motion detectors at all water tanks is underway. Badge entry at most facilities is a potential project. Additional funds are allocated for other unspecified security improvement projects. The water system funds 60% of the combined project cost.

- **C-7 Vehicles and Large Equipment (General).** This program funds additional new

and replacement of vehicles and large equipment shared by the water and sewer systems. Additional vehicles and equipment may be needed for increased maintenance plans and additional requirements for water treatment, safety issues and changing technology. Vehicles and equipment are scheduled for replacement due to age, heavy use, wear and tear, or required to meet operational needs of the District. The water system funds 60% of the combined project cost.

- **C-8 District Headquarters Facility Expansion.** Conduct a spatial needs analysis for the District headquarters considering existing use and requirements to support growth into the future. Implement analysis recommendations through a remodel/expansion capital improvement project. The water system funds 50% of the combined project cost.

8.2.2 General Water System

- **G-1 AMI.** This project is an extension of the nearly-complete project to implement advanced metering technology throughout the system. The identified budget will support customer outreach and launch of a customer portal.

- **G-2 Smart Water Infrastructure.** This project adds new data systems to enable analysis that will maximize efficiency of the water operations, particularly in the areas of leak detection, pressure monitoring, water quality monitoring and leveraging electricity use.

- **G-3 Vehicles and Large Equipment (Water).** The District budgets an amount annually to cover periodic purchases of vehicles and large equipment specifically for the water system. The vehicles and equipment are scheduled for replacement due to age, wear and tear and the ability of the vehicle to meet the evolving needs of the District.

- **G-4 Water Hydraulic Model.** The water system hydraulic model was updated and calibrated in 2016 for steady state conditions. With implementation of the AMR/AMI project, additional demand data is available. This project will further develop and enhance the hydraulic model, including development of extended period simulation parameters and analysis.

- **G-5 Water Comprehensive Plan.** Every ten years the District must update its water comprehensive plan. Capital funds are allocated periodically to support these updates.

- **G-6 550 Zone Study (Conversion to Blended Supply).** This is a study to evaluate the feasibility of transitioning the 550 Zone from the segregated supply area to the blended supply area.

- **G-7 700 SH Zone Study (Conversion to 550 & 590 Zones).** This is a study to evaluate the feasibility of transitioning the 700 SH Zone to the 550 and 590 Zones.

The 700 SH Zone currently receives high pressures as it is a lower elevation area obtaining water from the 700 Zone transmission main in 228th. This conversion would result in more moderate pressures to this area. The study would involve consideration of specific customer needs, in addition to impacts to the District's system.

8.2.3 Water Supply

- **W-1 Well 9 Pump and Motor Upgrade for Wells 7, 8 and 9 Well Field.** This project will replace pump and motor assemblies for Well 9. The pump replacement and motor upgrade will allow Well 9 to maximize the capacity of the well, and match the adjusted water right. The schedule for this project is dependent upon Department of Ecology approval of Well 9 as a permanent additional point of withdrawal for the Wells 7 and 8 water rights.

- **W-2 Well 9 PFC Treatment.** As described in Chapters 5 and 6, perfluorinated compounds (PFCs), and in particular Per- and Polyfluoroalkyl Substances (PFASs), have been detected in District wells 7, 8 and 9, as well as in nearby City of Issaquah wells. The District is monitoring this situation to discern trends and consider a long-range plan to manage these water resources in context of present health advisory levels. One alternative includes the potential implementation of additional treatment at the Well 9 treatment facility for supply from wells 7, 8 and 9, as described in Chapter 1. This project has been scheduled in the event the alternative chosen is to treat existing well supplies for PFASs.

- **W-3 Well 13 Pump Enclosure.** This project will create an addition to the existing building or create a separate shelter to enclose the existing well and piping that is located outside the structure. Additional consideration will be given to efficiency and safety concerns within the current space which may lead to renovation of the current structure.

8.2.4 Booster Pumping

No water booster pumping improvements were identified as being required in Chapter 3 for the 20-year planning horizon. The following projects address potential long-term improvements related to growth and facility maintenance and service reliability.

- **BP-1 SE 43rd Booster Pump Station Rehabilitation.** This project involves replacing the current below-grade booster pump station with an above-grade facility with new pumps and related components.

- **BP-2 New 297 Booster Pump.** This project will complete addition of a third pump in the existing station for increased capacity and reliability.

- **Well 9 to 650 Zone Booster Pump Station.** This project is a reliability measure associated and integrated with water main project M-8, for system reliability following

a significant seismic event. See project description in the Transmission and General Improvements section.

- **2 MG Reservoir Booster Pump Station Project.** The objective of this project is to make more effective use of storage in the 2 MG reservoir. See description for Project ST-11 in the Water Storage section.

8.2.5 Water Storage

No water storage capacity improvements were identified as being required in Chapter 3 for the 20-year planning horizon. District staff has identified several storage-related improvements for the CP, as follows.

- **ST-1 Reservoir Safety Improvements.** This project encompasses safety improvements to comply with current regulations. Work will address safety of ladders, step-offs, and safety cables on all reservoirs in the District.

- **ST-2 3 MG Tank Replace Interior Coating and Exterior Top Coating.** This project will replace the interior coating of the reservoir and upgrade the exterior coating with a top coat. This facility is jointly owned with Northeast Sammamish Sewer and Water District (NESSWD) and project implementation will be a joint decision. There is a Joint Facility Fund ("JFF") that has been established for funding projects associated with shared facilities. District use of the SPW portion of the JFF is shown as SPW JFF. NESSWD portion of funding is identified as "Other". The total project cost is reflected in Table 8-1.

- **ST-3 3 MG Tank Replace Exterior Coating.** This project will replace the exterior coating of the reservoir. As described for Project ST-2, the total project cost is reflected in Table 8-1, with cost sharing by NESSWD and SPW. This project is forecast for completion in 2035, subject to periodic assessment of the existing coating.

- **ST-4 Section 36 East Tank Replace Interior Coating.** This project will replace the interior coating of the reservoir.

- **ST-5 Section 36 East Tank Exterior Top Coating.** This project will upgrade the exterior coating of the reservoir with a top coat. This project is forecast for completion in 2030, subject to periodic assessment of the existing coating.

- **ST-6 Section 36 West Tank Exterior Top Coating and Replace Interior Coating.** This project will replace the interior coating of the reservoir and upgrade the exterior coating with a top coat. This project is forecast for completion in 2030, subject to periodic assessment of the existing coating.

- **ST-7 Section 36 East Tank Replace Exterior and Interior Coating.** This project will replace the interior and exterior coatings of the reservoir. This project is forecast

for completion in 2045, subject to periodic assessment of the existing coating.

- **ST-8 Section 36 West Tank Replace Exterior Coating.** This project will replace the exterior coating of the reservoir. This project is forecast for completion in 2040, subject to periodic assessment of the existing coating.

- **ST-9 2 MG Tank Replace Interior and Exterior Tank Coating.** This project will replace the interior and exterior coatings of the reservoir. The project will be coordinated with Project ST-10.

- **ST-10 2 MG Tank Improvements.** This project will include the installation of new piping or equipment in the tank structure to allow for better circulation of the water within the tank to improve the water quality and chlorine residual and add improvements for seismic resiliency. The timing of this project would be coordinated with Project ST-9.

- **ST-11 2 MG Tank Booster Pump Station.** This project will involve installation of a booster pump station to make more effective use of storage in this facility for the 650 Zone. The primary objective of this project is to enhance reliability by making storage in this tank more available to the 650 Zone in the event that storage in other facilities is unavailable.

- **ST-12 10 MG Reservoir.** This project is a conceptually-planned new facility near the 2 MG Reservoir, for storage needs anticipated beyond the 20-year planning period.

- **ST-13 7 MG & 297 Tank Seismic Retrofit.** Both tanks have been evaluated and found to be vulnerable to anchorage failure during a 1,000-year return seismic event. This project will retrofit both tanks with appropriate anchoring designed for the event level, to support continued service of each facility and to prevent collateral damage to the surrounding built and natural environment in the event of failure.

- **ST-14 7 MG Tank Exterior Coating.** The exterior coating of this tank is in good structural condition but will be damaged during the seismic retrofit (Project ST-13). The recoating of this tank is to follow the completion of the seismic retrofit work.

- **ST-15 7 MG Tank Replace Interior Coating.** This project will replace the interior coating of the reservoir.

- **ST-16 7 MG Tank Replace Exterior Coating.** This project will replace the exterior coating of the reservoir. This project is forecast for completion in 2035, subject to periodic assessment of the existing coating.

- **ST-17 297 Tank Replace Interior Coating and Exterior Top Coating.** This project will replace the interior coating of the reservoir and upgrade the exterior coating with a top coat.

- **ST-18 297 Tank Replace Exterior Coating.** This project will replace the exterior coating of the reservoir. This project is forecast for completion in 2035, subject to periodic assessment of the existing coating.

- **ST-19 Well 12 Tank Replace Interior Coating and Exterior Top Coating.** This project will replace the interior coating of the reservoir and upgrade the exterior coating with a top coat.

- **ST-20 Well 12 Tank Replace Exterior Coating.** This project will replace the exterior coating of the reservoir. This project is forecast for completion in 2037, subject to periodic assessment of the existing coating.

- **ST-21 Well 12 Reclaim Tank Replace Interior and Exterior Coating.** This project will replace the interior and exterior coatings of the reservoir. This project is forecast for completion in 2030, subject to periodic assessment of the existing coating.

8.2.6 Water Distribution System

Many of the following transmission and distribution-related capital improvement projects address deficiencies or needs described in Chapter 3, while some represent system improvement projects that the District plans to implement. Pipeline projects are grouped into four sections:

M-x: Transmission mains, mains related to projects by other agencies and general projects for mains (M) that provide connectivity or extensions for service that are not specifically identified as either redundancy or fire flow projects described in the following sections.

FF-x: Water mains and pressure reducing valve (PRV) stations planned to address fire flow deficiencies (FF).

R-x: Water mains and additional PRV stations planned to address water distribution redundancy and looping (R), as determined through the evaluation process described in Section 3.3.8 of Chapter 3.

Projects in Progress: Both Capital Improvement Projects (CIP) and Developer Extension (DEA) projects that are completed or nearing completion in 2018. These projects do not have individual project numbers or labels, but are simply designated DE/CIP in Table 8.1 and shown as solid lines on Figures 8-1 and 8-2.

8.2.6.1 Plateau Zone

Transmission and General Improvements

The transmission mains and general system improvement projects are summarized as

follows:

- **M-1 Zackuse Creek Fish Passage Culvert Main Replacement.** Replacement of existing main with new 8-inch main in the immediate vicinity of a fish passage culvert replacement project by the City of Sammamish due to conflicts with construction of the new culvert.

- **M-2 216th Ave SE and Main Street Replacement.** Replacement of existing 6-inch asbestos cement (AC) main with 660 feet (ft.) of 12-inch and 340 ft. of 8-inch ductile iron (DI) main along Main Street, west of 216th Ave SE.

- **M-3 Main Street from 216th to 218th Replacement (Flynn 218th SE Plat DEA).** This portion of the Flynn 218th SE Plat DEA will replace approximately 660 ft. of existing 6-inch AC main with 12-inch DI main.

- **M-4 SE 8th from 212th to 218th Replacement.** Replacement of approximately 1,330 ft. 6-inch AC main and 660 ft. 8-inch DI main in SE 8th St with 12-inch DI main.

- **M-5 228th Avenue SE 24" Transmission Main/Replacement.** Replacement of approximately 1,150 ft. of 12-inch AC main with 24-inch DI main. Project is located along 228th Ave SE from the south side of Pine Lake Middle School southward to the entrance to Marionwood.

- **M-6 Sorrento Estates 24" Transmission Main.** Connect 24-inch DI transmission main between the existing 24-inch transmission main in SE 48th St and the existing 20-inch transmission main from Providence Point to the 7 MG Tank. The project would be constructed simultaneously with a proposed developer extension project. This transmission main will allow the District to transfer water tank-to-tank between the 7 MG Tank and the 297 Tank to improve system reliability and meet build-out demands.

- **M-7 Issaquah Fall City Rd 16" Transmission Main/Replacement.** Replacement of approximately 790 ft. of 8-inch DI main with 16-inch DI main to improve fire flow. The 8-inch main was installed with the intention of replacement with the larger main when the road was improved. Construction will be coordinated with City's improvements on Issaquah Fall City Road Phase 3.

- **M-8 Well 9 to 650 Zone 16" Transmission Main and Booster Pump Station.** This project will install approximately 4,865 ft. of 16-inch DI main from Well 9 to the 650 Zone. The pipeline will be routed from Well 9 north to, then northeasterly along, SE Issaquah Fall City Rd, to SE Black Nugget Rd. The booster pump station would be located at a suitable location to be determined along SE Issaquah Fall City Rd. The initial project phase will focus on acquisition of the booster pump location.

- **M-10 Distribution System Connectivity and Extension Program.** The redundancy analysis described in Chapter 3 and system review by District staff

identified additional piping projects that are recommended for future implementation to improve overall system connectivity (i.e. looping and flow), as well as piping required to extend service to unserved or underserved parcels within the District's Service Area. Figures 8-1 and 8-2 indicate the general anticipated location and route for water mains to be added under this program. These depictions are schematic in nature to illustrate the general principle of pipe network connectivity and extension requirements. The actual connection and extension requirements will be determined at time of project initiation or during review of developer extension application.

Fire Flow Deficiency Improvements

The projects to address fire flow deficiencies are summarized as follows:

- **FF-1 NE 27th Pl/NE 29th St PRV Addition and Main Connection.** Addition of approximately 1,382 ft. of 8-inch DI main between 244th Ave NE and NE 29th St, and connection to existing main to the south. Project includes a new PRV on NE 29th St.

- **FF-2 212th Ave NE from NE 14th to NE 16th AC Replacement.** Replacement of approximately 660 ft. of existing 6-inch AC main with 8-inch DI main, to address a local segment of undersized main.

- **FF-3 NE 11th St and 209th Ave Replacement.** Replacement of approximately 1,464 ft. of 6-inch main with 8-inch DI main along NE 11th St from 207th Ave NE to 210th Ave NE and south along 209th Ave NE.

- **FF-4 N Inglewood Pressure Zone Modification Connection.** Install approximately 400 ft. of new 8-inch DI main to provide adequate customer and fire flow pressure. Convert existing valves to zone valves. Project is between 211th Pl NE and 211th Ave NE.

- **FF-5 216th Ave NE PRV Addition.** Install new PRV on 216th Ave NE north of NE 10th Pl on existing main.

- **FF-6 SE 1st St/222nd PL SE in Town Center and 228th Ave SE to Sammamish Commons Connection.** Install approximately 4,296 ft. of 16-inch main along future extension of SE 1st St west from 228th Ave SE to and south along 222nd Pl SE to SE 4th St, and from 228th Ave SE westerly along the extension of SE 8th St to the east side of Sammamish Commons, then northerly and westerly around Sammamish Commons.

- **FF-7 Sammamish Town Center SE 4th St Replacement.** In conjunction with the Sammamish Town Center project replace approximately 3,000 ft. of 8-inch main with 12-inch DI main along SE 4th St from 220th Ave SE to 225th Pl SE.

- **FF-8 Plateau Club Replacement.** Replacement of approximately 96 ft of 6-inch main with 12-inch DI main in the parking/access area of the Plateau Club golf course.

- **FF-9 SE 14th St Connection.** Install approximately 704 ft of 8-inch DI main along and east of SE 14th St to connect to existing main at northerly extension of 196th Ave SE.

- **FF-10 SE 16th St PRV Addition and SE 17th St Connection.** Install approximately 718 ft. new 8-inch DI main between the end of SE 17th St and SE 16th St at 196th Ave SE alignment and add new PRV on SE 16th St west of the new main connection.

- **FF-11 Waverly Hills PRV Addition and Main Replacement.** Replacement of approximately 5,289 ft. of 4-inch and 6-inch AC main along the following streets: SE 32nd St from E Lake Sammamish Pkwy SE to 199th Ave SE, 198th Ave SE/SE 30th St/196th Ave SE/SE 29th St from SE 32nd St to 200th Ave SE, SE 31st Pl from 198th Ave SE to 197th Ave SE and 198th Ave SE south of SE 29th St continuing south to 199th Ave SE. Project includes addition of a PRV on SE 30th St.

- **FF-12 Waverly Shores Connection.** Install approximately 779 ft of 8-inch DI main in E Lake Sammamish Shore Lane SE, south of the intersection with SE 33rd St, to connect two existing mains.

- **FF-13 Overdale 232nd Ave SE and SE 54th Pl Fire Flow Connection.** Install approximately 1,829 ft. of 8-inch main in SE 54th Pl SE, from 235th Ave SE to 232nd Ave SE, continuing north in 232nd Ave SE to SE 53rd St. connected to the 650 Pressure Zone system, to provide improved fire flow to an area served by the 700 OV Pressure Zone.

Redundancy Improvements

The projects identified to improve redundancy are summarized as follows:

- **R-1 NE 25th St Connection 1 (NE 25th St Assemblage DEA).** Install approximately 461 ft. of 8-inch DI main along NE 25th St and north to NE 26th Pl, west of 244th Ave NE to connect existing main to Project R-2. Easements crossing private properties may be required.

- **R-2 NE 25th St Connection 2.** Install approximately 985 ft. of 8-inch DI main along NE 25th St to connect Project R-1 with existing main in 244th Ave NE, and south of NE 25th to extension of NE 24th St west of 244th Ave NE, to connect to Project R-3. Easements crossing private properties may be required.

- **R-3 NE 24th St Connection (Cedar Hill DEA).** Install approximately 574 ft. of 8-inch DI main along extension of NE 24th St west of 244th Ave NE to connect existing main to Project R-2. Easements crossing private properties may be required.

- **R-4 NE 26th St Connection.** Install approximately 1,352 ft. of 8-inch DI main along NE 26th St east of 244th Ave NE to connect existing mains. Easements crossing private properties may be required.

- **R-5 207th Ave NE PRV Addition.** Install PRV on existing main on 207th Ave NE south of NE 15th St to provide additional supply path between pressure zones.

- **R-6 NE 15th St from 207th Pl NE to 208th NE Connection.** Install approximately 304 ft. of 8-inch DI main along NE 15th St from 207th Pl NE to 208th Ave NE to connect existing mains. Easements crossing private properties are required**.** New main will link the 475 Zone and 475 SAMSUN Zone and will allow the 475 SAMSUN Zone to receive water from the 650 Zone, which is fluoridated and chlorinated. PRV 20 would become normally closed and only open during fire flow conditions.

- **R-7 East Sammamish Park Connection.** Install approximately 1,118 ft. of 12-inch DI main from NE 16th St north and east through park property to connect existing mains. An easement crossing the park property is required**.**

- **R-8 NE 14th St from 212th to 216th NE Connection.** Install approximately 2,220 ft. of 8-inch DI main along NE 14th St from 212th to 216th Ave NE to connect existing mains. Easements crossing private properties are required**.**

- **R-9 NE 8th St Replacement**. Replacement of approximately 500 ft of 6-inch main with 8-inch DI main along NE 8th St from 216th Ave NE west to 214th Pl NE.

- **R-10 212th Ave NE PRV Addition.** Install PRV on existing main on 212th Ave NE north of NE Inglewood Hill Rd to provide additional supply path between pressure zones.

- **R-11 236th Ct NE Connection.** Install approximately 451 ft. of 8-inch DI main from 236th Ct NE north to connect existing mains. Easements crossing private properties are required**.**

- **R-12 NE 14th St Connection.** Install approximately 500 ft. of 12-inch DI main along NE 14th St alignment from 236th Pl NE east to connect existing mains. Easements crossing private properties are required**.**

- **R-13 238th Ave NE Connection.** Install approximately 500 ft. of 8-inch DI main from north end of 238th Ave NE north and east to connect existing main to Project R-14. Easements crossing private properties are required**.**

- **R-14 240th Ave NE Replacement (NE 8th Assemblage DEA).** Replacement of approximately 1,140 ft of 2-inch main with 8-inch DI main along 240th Ave NE north of NE 8th St, and extension to west to connect to Project R-13.

- **R-15 NE 4th St from 235th to 238th NE Connection.** Install approximately 1,580 ft. of 8-inch DI main from south end of 235th Ave NE south and east to NE 4th St at 238th Ave NE to connect existing mains. Easements crossing private properties are required**.**

- **R-16 243rd Ave NE Connection.** Install approximately 167 ft. of 8-inch DI main along 243rd Ave NE south of NE 14th St to connect existing mains. Easements crossing private properties may be required.

- **R-17 NE 18th St Connection 1 (NE 18th Assemblage DEA).** Install approximately 802 ft. of 8-inch DI main south from NE 18th St and east to connect to the 16th Sammamish Phase 2 - Shillam DEA (in progress). Easements crossing private properties may be required.

- **R-18 NE 18th St Connection 2.** Install approximately 500 ft. of 8-inch DI main south from NE 18th St and west to connect to the 16th Sammamish Phase 2 - Shillam DEA (in progress). Easements crossing private properties may be required.

- **R-19 247th Pl NE from NE 18th to 20th Connection.** Install approximately 683 ft. of 8-inch DI main along 247th Pl NE from NE 18th St to NE 20th St to connect existing mains. Easements crossing private properties may be required.

- **R-20 245th Ave NE Connection (Atherton-Campbell 246th NE Plat DEA).** Install approximately 1,834 ft. of 8-inch DI main from end of 245th Ave NE north of NE 11th Pl north to Twins Ridge DEA (in progress), and from east end of Twins Ridge extension east and south, for connection to Project R-21. Easements crossing private properties may be required.

- **R-21 NE 11th St to 250th Ave NE Connection.** Install approximately 1,638 ft. of 8-inch DI main from east end of NE 11th St to 250th Ave NE to connect existing mains and to Project R-20. Easements crossing private properties may be required.

- **R-22 250th Ave NE from NE 14th to NE 18th Connection.** Install approximately 1,490 ft. of 8-inch DI main from north end of 250th Ave NE at NE 14th St extension to NE 18th St to connect existing mains. Easements crossing private properties may be required.

- **R-23 254th Ave NE from NE 8th to NE 4th Connection**. Install approximately 1,492 ft. of 8-inch DI main along 254th Ave NE from NE 8th St to existing main north of NE 4th (if extended) to connect existing mains in the 550 Pressure Zone. Easements crossing private properties may be required.

- **R-24 222nd Pl NE Connection.** Install approximately 265 ft. of 8-inch DI main along 222nd Pl NE north of NE 2nd St north to Coffman 222nd NE Short Plat DEA (in progress). Easements crossing private properties may be required.

- **R-25 NE 2nd Ct Connection.** Install approximately 559 ft. of 8-inch DI main along NE 2nd Ct from 259th Ave NE west to connection to existing main in the parking/access area of the Plateau Club golf course. Easements crossing private properties may be required.

- **R-26 208th Ave SE PRV Addition.** Install PRV on existing main on 208th Ave SE at about westerly extension of SE 5th St to provide additional supply path between pressure zones.

- **R-27 220th Ave NE Connection.** Install approximately 750 ft. of 8-inch DI main along 220th Ave NE north from SE 4th St to connect to the Hennessey 220th SE Project and 218th McCabe (aka Brixton) DEAs (in progress). Easements crossing private properties may be required.

- **R-28 Town Center Connections NW.** Install approximately 3,894 ft. of 12-inch DI main between SE 4th St and the westerly extension of Main St from 228th Ave, with segments connecting to mains from the Villages at Sammamish Town Center DEA (in progress) and mains to be completed per Projects FF-6 and FF-7. Easements crossing private properties may be required.

- **R-29 Town Center Connections SW.** Install approximately 4,006 ft. of 12-inch DI main between SE 4th St, the northern edge of Sammamish Commons (NE 6th if extended) and continuing south to SE 8th west of 228th Ave SE, with segments connecting to Projects FF-6 and FF-7. Easements crossing private properties may be required.

- **R-30 Town Center Connections SE.** Install approximately 3,200 ft. of 12-inch DI main in a triangular area bounded on the south by SE 8th St, the west by 228th Ave SE and the north by Crusader Way, with segments connecting to existing mains and mains from Sammamish Town Ctr Townhomes TCA-3-1 DEA (in progress). Easements crossing private properties may be required.

- **R-31 Future Town Center School Site Connection.** Install approximately 2,220 ft. of 12-inch DI main in an area north and south of Crusader Way, including connection to existing main at the west end of SE 4th Pl. This project will connect to the Town Center Plateau 120 Apartments DEA (in progress). Easements crossing private properties may be required.

- **R-32 Thirty Acres Park Connection.** Install approximately 1,738 ft. of 8-inch DI main parallel to and north of SE 9th Way, between the Soaring Eagle Regional Park Pipeline Trail and transmission main and the mid-point of SE 9th Way, to provide additional capacity for the west end of SE 9th Way. Easements crossing the park property may be required.

- **R-33 SE 19th St and 193rd Ave SE Connection and PRV Addition.** Install approximately 1,758 ft. of 8-inch DI main between the west end of SE 19th St and the north end of 193rd Ave SE. A PRV will be necessary at the pressure zone boundary. Easements crossing private properties may be required.

- **R-34 SE 12th St and 208th Ave SE Connection.** Install approximately 2,670 ft. of 8-inch DI main along SE 12th St from 212th Ave SE west to then south along 208th Ave to SE 16th St to connect existing mains. Easements crossing private properties may be required.

- **R-35 SE 19th St and 205th Ave SE Connection.** Install approximately 592 ft. of 8-inch DI main between the east end of SE 19th St and the north end of 205th Ave SE to connect existing mains. Easements crossing private properties may be required.

- **R-36 SE 20th St Connection.** Install approximately 367 ft. of 8-inch DI main between the existing main serving Creekside Elementary School and SE 20th St, to connect existing mains. Easements crossing private properties may be required.

- **R-37 SE 24th St to 210th Pl SE Connection (Tridco SE 24th Short Plat or Baker SE 24th Short Plat DEA).** Install approximately 369 ft. of 8-inch DI main between SE 24th St and the intersection of SE 22nd St and 210th Pl SE, to connect existing mains. Easements crossing private properties may be required.

- **R-38 215th SE Connection.** Install approximately 580 ft. of 8-inch DI main along the extension of 215th Ct SE, connecting mains installed by Sienna Lane II and Taylor SE 20th Short Plat DEAs (in progress). Easements crossing private properties may be required.

- **R-39 218th Ave SE Connection.** Install approximately 1,090 ft. of 8-inch DI main south from SE 8th St along the southerly extension of 218th Ave SE to connect to the existing main at the east end of SE 13th Pl. Easements crossing Big Rock Park or private properties may be required.

- **R-40 223rd Ave SE Connection (Lancaster 223rd DEA).** Install approximately 1,037 ft. of 8-inch DI main between the south end of Lancaster Way SE and the existing main at the north end of 223rd Ave SE, to connect existing mains. Easements crossing private properties may be required.

- **R-41 226th Ave SE Connection.** Install approximately 1,662 ft. of 8-inch DI main between 228th Ave SE west along SE 23rd Pl then south, crossing Pine Lake Park, to the existing main at the north end of 226th Ave SE, to connect existing mains. Easements crossing private properties and Pine Lake Park may be required.

- **R-42 SE 22nd St Connection.** Install approximately 1,142 ft. of 8-inch DI main between the east end of SE 21st St, east of 228th Ave SE, east and south to the existing main at the west end of SE 22nd St, to connect existing mains. Easements crossing private properties may be required.

- **R-43 239th Pl SE Connection.** Install approximately 2,104 ft. of 8-inch DI main between SE 24th St, north along 239th Pl SE then northeasterly to the existing main

in SE 18th Pl, to connect existing mains. Easements crossing private properties may be required.

- **R-44 244th Ave SE Connection.** Install approximately 1,229 ft. of 8-inch DI main between 244th Ave SE at SE 17th Pl north and northeasterly to SE 14th St, east of and parallel to 244th Pl SE, to connect existing mains. Easements crossing private properties may be required.

- **R-45 247th Ave to 248th Ave SE Connection.** Install approximately 418 ft. of 8-inch DI main between 247th Ave SE and 248th Ave SE south of SE 14th St, to connect existing mains. Easements crossing private properties and the powerline easement may be required.

- **R-46 SE 13th St Connection.** Install approximately 384 ft. of 8-inch DI main from 251st Ave SE, west, to connect existing main to the Richter SE 14th Plat DEA (in progress). Easements crossing private properties may be required.

- **R-47 SE 17th St to SE 14th St Connection.** Install approximately 1,591 ft. of 8-inch DI main along SE 17th St between 249th Pl SE and 251st Pl SE, then north to SE 14th St, to connect existing mains. This project will also connect to Project R-48. Easements crossing private properties may be required.

- **R-48 SE 17th St Connection (Yu SE 17th Short Plat DEA).** Install approximately 135 ft. of 8-inch DI main along SE 17th St from east end of existing main to 249th Pl SE, to connect existing mains, and to connect to Project R-47. Easements crossing private properties may be required.

- **R-49 SE 20th Pl from 245th to 242nd Ave SE Connection.** Install approximately 895 ft. of 8-inch DI main along SE 20th Pl west of 245th Ave SE to 242nd Ave SE, to connect existing mains. Easements crossing private properties may be required.

- **R-50 246th Ave SE to SE 17th Pl Connection (Sammamish Highlands on 248th and Hamilton Estates DEAs for 246th section).** Install approximately 1,670 ft. of 8-inch DI main from along 246th Ave SE from north end of existing main, north and then west to SE 17th Pl at 244th Ave SE, to connect existing mains. Easements crossing private properties may be required.

- **R-51 251st Ave SE to West Beaver Lake Dr SE Connection.** Install approximately 708 ft. of 8-inch DI main from 251st Ave SE at SE 21st Pl to West Beaver Lake Dr SE, to connect existing mains, including connection to main in 251st Pl SE. Easements crossing private properties may be required.

- **R-52 SE 29th St to SE 24th Way SE Connection and PRV Addition.** Install approximately 1,037 ft. of 8-inch DI main from SE 29th St at 198th Ave SE northwest to SE 24th Way at SE 27th Pl. A PRV will be necessary at the pressure zone boundary. Easements crossing private properties may be required.

- **R-53 SE 29th St Connection.** Install approximately 1,450 ft. of 8-inch DI main from the 200th Ave SE to 204th Ave SE in the SE 29th St alignment, to connect existing mains. Easements crossing private properties may be required.

- **R-54 SE 28th Pl Connection.** Install approximately 590 ft. of 8-inch DI main from the west end of SE 28th Pl west to 208th Ave SE, to connect existing mains. Easements crossing private properties may be required.

- **R-55 SE 39th St Connection.** Install approximately 1,818 ft. of 8-inch DI main from 212th Ave SE along SE 39th St, continuing east and north to SE 37th St, to connect existing mains. Easements crossing private properties may be required.

- **R-56 SE 29th Pl Connection.** Install approximately 795 ft. of 8-inch DI main along SE 29th Pl from 222nd Pl SE to 220th Ave SE, to connect existing mains. Easements crossing private properties may be required.

- **R-57 221st Ave SE Connection.** Install approximately 1,170 ft. of 8-inch DI main from SE 40th Ln in Providence Point, north in 221st Ave SE then east along SE 38th St, to connect existing mains to the 223rd Mullen-Warren Assemblage DEA (in progress). Easements crossing private properties may be required.

- **R-58 SE 35th St Connection.** Install approximately 333 ft. of 8-inch DI main between 226th Ave SE and 225th Ave SE, along SE 35 St alignment, to connect existing mains. Easements crossing private properties may be required.

- **R-59 239th Ave SE Connection.** Install approximately 1,038 ft. of 8-inch DI main from Issaquah-Pine Lake Rd SE northwest of SE 36th Ln northeasterly to the south end of 239th Ave SE, to connect existing mains. Easements crossing private properties may be required.

- **R-60 241st Ave SE Connection.** Install approximately 765 ft. of 8-inch DI main from SE 24th St south to connect to the Penny Lane South DEA (in progress), along the 241st Ave SE alignment. Easements crossing private properties may be required.

- **R-61 SE 25th St and SE Duthie Hill Rd Connections.** Install approximately 3,864 ft. of 8-inch DI main along SE 25th St (if extended) between 267th Ct SE and 272nd Way SE, and from the SE 25th St alignment along 270th Ave SE and 271st Ave SE to SE Duthie Hill Rd, to connect existing mains. Easements crossing private properties may be required.

- **R-62 SE Issaquah-Fall City Rd Connection.** Install approximately 3,107 ft. of 8-inch DI main along SE Issaquah-Fall City Rd from east of Klahanie Dr SE to a location near SE 41st Ct, to connect existing mains, including mains that extend from the interior of Klahanie to SE Issaquah-Fall City Rd.

- **R-63 SE 48th St to SE 46th alignment Connection (Hochanadel SE 48th Property - Sorrento Estates DEA).** Install approximately 1,542 ft. of 8-inch DI main from SE 48th St north through the proposed Sorrento development to, parallel to Project M-6, to SE 46th, if extended, and 228th Ave SE, to connect existing mains, including connection with Project R-64. Easements crossing private properties may be required.

- **R-64 229th Pl SE Connection.** Install approximately 250 ft. of 8-inch DI main from the existing main in 229th Pl SE west to connect to Project R-63. Easements crossing private properties may be required.

- **R-65 240th Ave SE Connection.** Install approximately 221 ft. of 8-inch DI main between 240th Ave SE and 240th Pl SE, to connect existing mains. Easements crossing private properties may be required.

- **R-66 East Lake Sammamish Center North Connection.** Install approximately 360 ft. of 16-inch DI main between existing mains in the shopping centers north and south of SE Black Nugget Road. Easements crossing private properties may be required.

- **R-67 229th Ave SE Connection.** Install approximately 831 ft. of 8-inch DI main between south end of 229th Ave SE in Overdale and existing main in northwest corner of The Heights at Issaquah development, to connect existing mains. Easements crossing private properties may be required.

- **R-68 East Lake Sammamish Center South Connection.** Install approximately 765 ft. of 16-inch DI main through the parking lot of the southernmost lot of the East Lake Sammamish Center (currently Walgreens) and along SE Issaquah-Fall City Rd to E Lake Sammamish Pkwy SE, to connect existing mains. Easements crossing private properties may be required.

- **R-69 University House/Timbers Connection.** Install approximately 270 ft. of 8-inch DI main between the existing mains in The Timbers II multi-family development and the University House senior housing, parallel to and northwest of SE Issaquah-Fall City Rd. Easements crossing private properties may be required.

Projects in Progress

The following developer extension and District Capital Improvement Projects are in progress. Projects that are part of current Developer Extension Agreements are identified with DEA as part of the project name.

- **Inglewood JNT 2387 NE 15th Residence DEA.** Extension of approximately 192 ft. of 8-DI main near NE 16th St and 207th Ave NE.

- **Inglewood Hill Rd at 211th PL NE Main Replacement.** Replacement of existing 2-inch galvanized, 4-inch AC main and 8-inch AC main with 8-inch DI main in

Inglewood Hill Rd. between 211th Ave NE & 212th Ave NE, and with 8-inch and 4-inch DI in 211th Pl NE north of NE 13th (if extended).

- **16th Sammamish II - Shillam DEA.** Approximately 236 ft. of 8-inch DI main extension north of intersection of NE 16th St and 247th Ave NE.

- **Twins Ridge DEA.** Approximately 1,527 ft. of 8-inch DI main extension southeast of intersection of NE 16th St and 244th Ave NE.

- **Morningside Estates DEA.** Approximately 783 ft. of 8-inch DI main extension from Main St and 215th NE north and east to 214th Ave NE.

- **Flynn 218th SE Plat DEA (onsite portion).** Approximately 674 ft. of 8-inch DI main extension from 216th Pl SE at SE 2nd north to Main St.

- **218th McCabe (aka Brixton) DEA (offsite portion).** Approximately 675 ft. of 12-inch DI main extension along 218th Ave NE from Main St to SE 2nd (if extended).

- **Hennessey 222nd SE Short Plat and 218th McCabe (aka Brixton) DEAs.** Approximately 2,000 ft. of 8-inch DI main extension along SE 1st from 218th Ave NE to 222nd Pl SE.

- **Village at Sammamish Town Center DEA.** Approximately 1,242 ft. of 12-inch DI main extension in SE 4th and the Villages development between 228th Ave SE and 225th Ave SE.

- **Town Center Plateau 120 Apartments DEA.** Approximately 755 ft. of 12-inch DI main extension on SE 1st, east of 228th Ave SE.

- **Sammamish Town Ctr Townhomes – TCA-3-1 DEA**. Approximately 675 ft. of 12-inch DI main and 755 ft. of 8-inch DI main extension east of 228th Ave SE at SE 5th.

- **Coffman 222nd NE Short Plat DEA.** Approximately 505 ft. of 8-inch DI main extension from the SE 4th alignment south to the north end of 222nd Pl NE.

- **Reynolds SE 8th Short Plat DEA.** Approximately 265 ft. of 8-inch DI main extension along SE 8th St east of 200th Ave SE.

- **Richter SE 14th Plat DEA.** Approximately 392 ft. of 8-inch DI main extension from the east end of SE 13th Pl at 249th Ave SE (if extended).

- **Sammamish Highlands on 248th DEA.** Approximately 660 ft. of 8-inch DI main extension between 246th Ave SE and 248th Ave SE at SE 21st.

- **Penny Lane South DEA.** Approximately 933 ft. of 8-inch DI main extension northwest of intersection of SE 28th St and 242nd Ave SE.

- **223rd Mullen-Warren Assemblage DEA.** Approximately 2,013 ft. of 8-inch DI main extension along 223rd Ave SE between Providence Point and about SE 36th St.

- **Providence Ridge DEA.** Approximately 1,877 ft. of 12-inch DI main extension along and south of SE 43rd Way, from Forest Village in Providence Point at 220th Ave SE (if extended).

- **Taylor SE 20th Short Plat DEA.** Approximately 270 ft. of 8-inch DI main extension along 214th SE south of SE 20th.

- **Sienna Lane II DEA.** Approximately 229 ft. of 8-inch DI main extension along 215th Pl SE, extending from Sienna Lane south of SE 20th.

- **Sunnyhills Elementary School Replacement DEA.** Approximately 1,339 ft. of 12-inch DI main extension from Issaquah-Pine Lake Rd SE to 235th Pl SE north of SE 32nd Way.

- **Jarvis Estates SW DEA.** Approximately 1,003 ft. of 8-inch DI main extension between 232nd Ave SE in Kempton Downs and 234th Ave SE in Lac Riant.

- **Oxley SE 30th Short Plat DEA.** Approximately 691 ft. of 8-inch DI main extension between SE 30th St and SE 32nd St, on 243rd Ave SE.

- **Irons-Hedberg Issaquah-Beaver Lake Rd Plat DEA.** Approximately 871 ft. of 8-inch DI main extension from SE 36th Ct to 262 Ave SE.

- **212th Way SE Road Improvements**. Relocation of approximately 250 ft of 8-inch DI main in 212th Way SE, at the connection to the main into Peregrine Point, included with the City of Sammamish 212th Way SE Road Improvement project.

- **SE 52nd at 229th SE AC Main Replacement**. Approximately 100 ft. of 8-inch DI main at SE 52nd and 229th Ave SE, to connect the northwest Overdale connection to the distribution system, and replace the prior emergency intertie connection to the transmission system.

- **221st Pl SE Main Replacement**. Approximately 1,000 feet of 12-inch DI main in 221st Pl SE extending south from 5655 221st Pl. SE to approximately SE 61st, where it will connect to the SE 62nd and 221st Pl SE Main Replacement Project. This project will improve fire flow for this commercial area and provide additional transmission capacity for supply from the Issaquah Valley Wells.

- **SE 62nd & 221st Pl SE Main Replacement**. Approximately 650 feet of 12-inch DI main in 221st Pl SE extending south from the 221st Pl SE Main Replacement project at approximately SE 61st to SE 62nd St, where it will connect to an existing main in 4th Ave NW and approximately 40 ft. of 8-inch DI main to connect to an existing

main in SE 62nd. This project is included with the City of Issaquah SE 62nd Improvements project, and will improve fire flow for this commercial area and provide additional transmission capacity for supply from the Issaquah Valley Wells.

8.2.6.2 Cascade View Zone

Transmission and General Improvements
The transmission mains and general system improvement projects are summarized as follows:

- **M-9 Redmond-Fall City Rd/Ames Lake Rd 12" Transmission Main.** Extension of approximately 7,141 feet of new 12-inch transmission main from the Plateau Zone 550 Zone to the Cascade View Zone 550 CV Zone.

- **M-10 Distribution System Connectivity and Extension Program.** The redundancy analysis described in Chapter 3 and system review by District staff identified additional piping projects that are recommended for future implementation to improve overall system connectivity (i.e. looping and flow), as well as piping required to extend service to unserved or underserved parcels within the District's Service Area. Figures 8-1 and 8-2 indicate the general anticipated location and route for water mains to be added under this program. These depictions are schematic in nature to illustrate the general principle of pipe network connectivity and extension requirements. The actual connection and extension requirements will be determined at time of project initiation or during review of developer extension application.

Fire Flow Deficiency Improvements
The projects to address fire flow deficiencies are summarized as follows:

- **FF-14 NE 80th St Connection**. Install approximately 2,342 ft. new 12-inch DI main, to complete a loop along NE 80th St between 246th Ave NE and 255th Ave NE. This project will also enable the District to more efficiently move North Regional Connection water from the connection through the Cascade View Zone and to the Well 13 storage tank.

- **FF-15 NE 70th St Replacement.** Replace approximately 2,615 ft of 8-inch main with 12-inch DI main, along NE 70th St from the Well 13 Tank and north along private driveway east of equestrian center.

- **FF-16 NE Union Hill Rd and 266th Ave NE Connection.** Install approximately 2,531 ft. of 8-inch DI main beginning at 264th Ave NE easterly along NE Union Hill Rd and south along the extension of 266th Ave NE to NE 53rd St, together with an extension of 8-inch DI main in NE 51st St east of 264th Ave NE.

- **FF-17 NE 45th St/268th Ave NE Connection.** Install approximately 2,740 ft. of 8-inch DI main from 264th Ave NE to 272nd Ave NE in NE 45th St.

- **FF-18 NE 45th St/272nd Ave NE Replacement.** Replace approximately 660 ft. of existing 2-inch main with 8-inch DI main from 272nd Ave NE to the east. This extension is necessary to provide fire flow to a future extension to the east.

Redundancy Improvements

The projects identified to improve redundancy are summarized as follows:

- **R-70 Dawnbreaker Cascade Intertie/Connection.** Installation of approximately 2,848 ft. of 8-inch DI main from the intersection of 255th Ave NE and NE 100th St west, north and west along NE 100th St, 248th Ave NE and NE 102nd St., from the 201 Development 9081 Redmond Ridge Short Plat (in progress) through Dawnbreaker to Eastridge Dr. NE for an intertie to provide a redundant connection to Cascade Water Alliance and the North Regional Supply.

- **R-71 250th and 252nd Ave NE from NE 80th to NE 85th St Connection.** Install approximately 5,905 ft. of 8-inch DI main from NE 80th St north along 250th Ave NE and along 252nd Ave NE, with a connection between those two alignments, along with segment from 252nd Ave NE to intersection of NE 85th St and 255th Ave NE, to connect existing main to Project FF-14. Easements crossing private properties may be required.

- **R-72 248th Ave NE Connection.** Install approximately 1,285 ft. of 8-inch DI main in 248th Ave NE from the southeast end of NE 72nd St southeasterly to NE 67th Pl, to connect existing mains. Easements crossing private properties and the powerline easement may be required.

- **R-73 254th Ave NE Connection.** Install approximately 2,436 ft. of 8-inch DI main south from NE 80th St along 254th NE to connect to existing main north of NE 67th Pl, and a connection west to the Culbertson 252nd NE Plat (in progress). Easements crossing private properties may be required.

- **R-74 245th Ave NE Connection.** Install approximately 705 ft. of 8-inch DI main north from NE 52nd Pl along and to 245th Ave NE, to connect existing mains. Easements crossing private properties may be required.

- **R-75 NE 47th Pl and 254th Ave NE Connection.** Install approximately 1,687 ft. of 8-inch DI main from in the NE 47th Pl alignment from the end of an existing main at the east edge of the plat of Canyon Creek, east to the end of NE 47th Pl, and south along 254th Ave NE alignment to existing main north of NE 42nd St, to connect existing mains. Easements crossing private properties and the powerline easement may be required.

- **R-76 NE 29th Pl Connection and PRV Addition.** Install approximately 1,143 ft. of 8-inch DI main from the east end of NE 29th Pl to NE Ames Lake Rd near 264th Ave NE, to connect existing mains. A PRV will be necessary at the pressure zone boundary. Easements crossing private properties may be required.

- **R-77 NE 24th St Amesbury Connection.** Install approximately 2,049 ft. of 8-inch DI main along NE 24th St. between 259th Ave NE and 265th Ave NE south of Amesbury, to connect existing mains. Easements crossing private properties may be required.

Projects in Progress

The following developer extension projects are in progress.

- **201 Development 9081 Redmond Ridge Short Plat DEA.** Approximately 2,329 ft. of 8-inch DI main extension along NE 100th St between 255th Ave NE and the end of 258th Ave NE.

- **Culbertson 252nd NE Plat DEA.** Approximately 2,021 ft. of 8-inch DI main extension north of NE 67th Pl, east of 248th Ave NE.

CHAPTER NINE – FINANCIAL SUMMARY

This page intentionally left blank.

9. Financial Summary

Table of Contents

9.1 Past Financial History 9-1
9.2 Review of the District's Water Rates 9-4
9.3 Development of the Financial Analysis 9-6
9.3.1 Revenues and Expenses 9-6
9.3.1.1 Revenues 9-6
9.3.1.2 Expenses 9-7
9.3.2 Internal Sources of Funds 9-10
9.3.3 External Sources of Funds 9-11
9.4 Water General Facilities Charge 9-12
9.4.1 Existing Cost Basis 9-13
9.4.2 Future Cost Basis 9-14
9.4.3 Customer Base 9-14
9.4.4 GFC Calculation 9-14
9.5 Summary of the Financial Analysis 9-17
9.6 Rate Impacts 9-17
9.7 Summary 9-20

Tables

Table 9-1 Summary of Operating Financial History ($000s) 9-2
Table 9-2 Current Water Rates (as of January 1, 2019) 9-5
Table 9-3 Current Water GFCs and LFCs (as of July 17, 2018) 9-6
Table 9-4 Summary of Water Capital Projects ($000s) 9-9
Table 9-5 Updated Water GFC Calculation 9-16
Table 9-6 Summary of the Ten-Year Financial Plan ($000s) 9-18
Table 9-7 Water Rate Forecast 9-19

This page intentionally left blank.

9. Financial Summary

This chapter presents a plan for financing the operating and capital needs of the District's water system, given existing expenses as well as incremental costs associated with the projects identified in the Water Comprehensive Plan. The completion of this master planning effort is a requirement of the Department of Health (DOH).

The District proactively manages the water utility's finances, internally reviewing the utility's financial status regularly and adjusting water rates as needed to cover costs. It periodically initiates a more comprehensive study of utility rates and financial policies, the most recent of which considered a variety of topics:

- Balancing the need to stabilize utility revenue streams (in light of recent declines in water sales) with longer-term objectives such as promoting water conservation
- Reviewing the District's progress in funding capital replacement needs
- Updating general facilities charges (GFCs) to recover an equitable share of system costs from growth, given the District's historical and planned investments in infrastructure

The financial plan developed as part of this Plan includes projected operating and capital costs of the system for the 20-year time horizon of 2018 to 2037. The revenues and expenses used in the financial plan were obtained from the District's 2019 Budget and escalated for future years; the capital costs contained within the financial plan utilize the Capital Plan (CP) in Chapter 8 of this Plan. The financial plan evaluates the sufficiency of revenues at current rates to fund projected operating and capital needs, developing a strategy of rate adjustments needed to cover any costs in excess of available revenues. Note that this financial plan focuses on aggregate revenue needs, and does not address cost allocations between customer classes or rate design (aside from across-the-board adjustments to the current rate structure).

9.1 Past Financial History

This chapter includes a summary of the District's historical financial performance as part of the overall assessment of the District's financial viability prior to completing any projects identified in the CP.

Table 9-1 summarizes the water utility's financial performance over the past ten years.

Table 9-1
Summary of Operating Financial History (Note: Dollars in Thousands, $000s)

	2008	2009	2010	2011	2012	2013	2014	2015	2016	2017
Water Rate Revenue	$ 7,312	$ 8,938	$ 8,211	$ 9,035	$10,474	$10,910	$12,058	$13,803	$13,531	$15,276
Other Water Revenue	176	204	200	199	459	530	626	689	729	746
Total Water Operating Revenue	$ 7,488	$ 9,142	$ 8,411	$ 9,234	$10,933	$11,440	$12,684	$14,492	$14,260	$16,022
Operating Expenses	$ 5,639	$ 6,151	$ 5,433	$ 6,654	$ 6,704	$ 7,152	$ 7,462	$ 7,681	$ 8,204	$ 8,496
Depreciation and Amortization	3,341	3,419	3,396	3,394	3,926	2,571	2,468	2,458	2,495	2,702
Total Water Operating Expenses	$ 8,980	$ 9,570	$ 8,829	$10,048	$10,630	$ 9,722	$ 9,930	$10,139	$10,699	$11,198
Operating Income (Loss)	**$ (1,493)**	**$ (427)**	**$ (418)**	**$ (814)**	**$ 302**	**$ 1,718**	**$ 2,754**	**$ 4,353**	**$ 3,560**	**$ 4,824**
Non-Operating Revenues (Expenses)										
Interest	407	280	196	124	397	105	265	221	339	395
Rental and Other Income	99	74	65	317	305	356	197	348	204	207
Net Gain (Loss) on Disposition/Abandonment of Assets	(674)	(541)	5	(133)	(102)	(41)	(3)	(210)	1,123	7
Interest and Amortization	(235)	(156)	(133)	(204)	(291)	(268)	(203)	(135)	(38)	22
Interlocal Settlement	-	-	-	-	-	-	-	(980)	(0)	-
Income (Loss) Before Capital Contributions	$ (1,896)	$ (770)	$ (287)	$ (710)	$ 611	$ 1,871	$ 3,011	$ 3,598	$ 5,188	$ 5,455
Capital Contributions	4,321	2,371	1,825	4,256	5,408	6,168	5,826	4,111	7,493	7,563
Change In Net Position	**$ 2,425**	**$ 1,601**	**$ 1,538**	**$ 3,546**	**$ 6,019**	**$ 8,039**	**$ 8,836**	**$ 7,708**	**$12,681**	**$13,019**
Operating Ratio[1]										
Excluding Depreciation	**1.33**	**1.49**	**1.55**	**1.39**	**1.63**	**1.60**	**1.70**	**1.89**	**1.74**	**1.89**
Including Depreciation	**0.83**	**0.96**	**0.95**	**0.92**	**1.03**	**1.18**	**1.28**	**1.43**	**1.33**	**1.43**
Current Ratio[2]	**4.76**	**4.21**	**4.07**	**3.97**	**7.30**	**7.28**	**8.02**	**7.67**	**7.84**	**9.25**
Days Cash on Hand	**942**	**778**	**929**	**825**	**1,249**	**1,344**	**1,563**	**1,816**	**1,885**	**2,121**
Capital Reinvestment Transfers	**$ 1,800**	**$ 2,132**	**$ 1,619**	**$ 2,239**	**$ 2,488**	**$ 2,191**	**$ 2,299**	**$ 2,378**	**$ 3,303**	**$ 3,520**
Summary of Outstanding Debt (Joint Water/Sewer)										
Outstanding Debt Principal										
Loans	$ 3,807	$ 3,503	$ 3,412	$ 3,178	$ 2,945	$ 2,712	$ 3,269	$ 3,239	$ 2,540	$ 2,272
Revenue Bonds	23,750	22,035	20,120	18,210	16,235	17,905	15,645	13,320	10,920	8,460
Total	$27,557	$25,538	$23,532	$21,388	$19,180	$20,617	$18,914	$16,559	$13,460	$10,732
Outstanding Principal as % of Capital Assets	*13%*	*11%*	*10%*	*9%*	*8%*	*8%*	*7%*	*6%*	*5%*	*4%*
Debt Service Coverage (Joint Water/Sewer)										
Parity Debt	**2.00**	**1.46**	**1.62**	**1.53**	**3.61**	**3.79**	**4.85**	**6.06**	**5.79**	**6.82**
All Debt	**1.70**	**1.35**	**1.49**	**1.40**	**3.11**	**3.29**	**4.22**	**5.27**	**5.08**	**5.98**

[1] Operating Ratio measures the ability of annual operating revenues to cover annual operating expenses.
[2] Current Ratio is a measure of short-term liquidity.

The key findings of Table 9-1 include:

- Water sales revenue increased by 108.9% from 2008 – 2017. Most of this increase is attributable to the District adjusting its water rates to meet revenue requirements by a cumulative 66.8% during the same period, due in part to the District's policy to fund infrastructure replacement as part of its asset-management efforts. Revenue also increased because the District added 2,573 water service connections, reflecting cumulative growth of 16.0% over the ten-year period (which averages to approximately 1.7% per year).

- Operating expenses (excluding depreciation) increased by 50.7% from 2008 – 2017. The most significant cost increases have occurred in labor, professional services, and water purchase costs. It is worth noting that the District's water purchase costs have increased due to rate increases imposed by Cascade Water Alliance as well as the fact that Cascade imposed a minimum Demand Share on the District of 1.0 mgd in 2012.

- Operating income has remained positive since 2012, coinciding with the completion of a comprehensive water rate study. Following that effort, the District has reviewed and adjusted its water rates annually, with a preference toward small incremental annual increases reflective of the cost of service.

- The operating ratio provides a means of evaluating the District's self-sufficiency as an enterprise, measuring the ability of annual operating revenues to cover annual operating costs. Including depreciation expense in this calculation provides insight as to whether the District is charging customers enough to fund the replacement of assets in addition to daily operating costs. Table 9-1 indicates that the District was able to cover operating costs for the entire ten-year period but was unable to fully fund depreciation expense from 2008 through 2011. Since 2012, this ratio has climbed to 1.43 due to increases in the amount of capital reinvestment that the District has funded through water rates.

- The current ratio is a measure of short-term liquidity or the District's ability to pay its current bills – it is calculated by dividing unrestricted current assets (excluding inventories and prepaid items) by current liabilities. A ratio of 1.0 indicates that the utility has exactly enough to pay its bills; higher values are desirable as they suggest an ability to pay large or unanticipated bills. The District has attained current ratios varying from 3.97 to 9.25 over the past ten years, suggesting that the District has ample capacity to meet its short-term financial obligations.

- Days of cash on hand is a measure of financial security, quantifying how long the District would be able to fund daily operating and maintenance costs if it received no additional revenue. It is calculated by dividing unrestricted cash by the average daily cost of operations (excluding depreciation). While there is no firm minimum standard for this metric, bond rating agencies have recently expressed a preference for a minimum of 180 days of cash on hand for utilities seeking the highest bond ratings. Due in part to cash generated through its capital

reinvestment policy, the District has been able to maintain 778 – 2,121 days of cash on hand over the past ten years.

- The District has cut its outstanding debt principal balance by almost $17 million over the past ten years. It has primarily funded capital improvement projects through cash resources, including general facilities charges (GFCs), local facilities charges (LFCs), developer extension agreements (DEAs), utility local improvement districts (ULIDs), and rates (balances in the Operating Fund and Capital Replacement Fund). The District currently has two outstanding revenue bonds and four outstanding loans, with a combined balance of $10.7 million outstanding as of year-end 2017. The District has maintained debt service coverage ratios of 1.46 – 6.82 on revenue bonds, exceeding the 1.25 ratio required by its bond covenants.

- The Debt-to-Asset Ratio is a measure of indebtedness. This metric is often used to evaluate whether a utility is overleveraged, with values above 60% suggesting that a utility may have too much debt. Excessive indebtedness can be viewed negatively in the context of a fiscal health evaluation, as debt comes with incremental costs (e.g. interest) and requirements (e.g. coverage, reserves) that may reduce a utility's financial flexibility. The District's ratio has decreased steadily from 13% in 2008 to 4% in 2017, which is indicative of a primarily "pay-as-you-go" capital funding strategy.

In addition to the operating revenue shown above, the water utility also receives various revenues for capital improvement projects. Aside from existing fund balances, the primary internal source of capital funding revenue is GFCs – new customers pay GFCs when connecting to the system as their fair share of the system's infrastructure costs. GFC revenues are generally designated for growth-related capital improvements, but are also used to reimburse other funds for the cost of existing facilities with capacity available to serve growth. The District's historical water GFC revenue collections have been relatively variable in the recent past, varying from a high of $3,081,532 in 2014 to a low of $817,180 in 2015.

9.2 Review of the District's Water Rates

To meet its financial requirements, the District has adopted water rates that include:

- A fixed charge that promotes revenue stability, recognizing the relatively fixed nature of the District's cost structure. Multi-family residences pay a monthly charge per living unit, while single-family and non-residential customers pay a charge based on water meter size.

- A usage (commodity) charge that promotes water conservation, recognizing the role that peak demand has in the District's operating costs (e.g. water purchases) and capital costs (e.g. capacity-expanding investments in infrastructure). Single-

family residences pay for their usage under an inclining block structure, with the rate per ccf increasing as a customer uses more water. Other customers are subject to a seasonal rate structure that imposes a higher rate per ccf for water used between the months of July and October relative to water used during the other (off-peak) months.

A copy of the Resolution adopting the 2019 water rates is included in Appendix G.

Table 9-2 summarizes the current water rate structure as of January 1st, 2019:

Table 9-2
Current Water Rates (as of January 1, 2019)

Monthly Water Rate Structure	Single-Family	Multi-Family	Commercial	Irrigation	
				Unaudited	Audited
Fixed Charge per Meter					
3/4" Meter	$30.87		$30.87	$30.87	$30.87
1" Meter	$66.28		$66.28	$66.28	$66.28
1-1/2" Meter	$125.29		$125.29	$125.29	$125.29
2" Meter	$196.11		$196.11	$196.11	$196.11
3" Meter	$384.93		$384.93	$384.93	$384.93
4" Meter	$597.39		$597.39	$597.39	$597.39
Fixed Charge per Dwelling Unit		$17.92			
Volume Charge per ccf					
Single-Family					
Block 1 (≤ 6 ccf)	$2.02				
Block 2 (6 - 12 ccf)	$2.46				
Block 3 (12 - 25 ccf)	$3.98				
Block 4 (> 25 ccf)	$6.63				
All Other Customers					
November - June		$1.63	$1.63	$10.87	$6.44
July - October		$2.40	$2.40	$11.28	$6.63

The District also imposes general facilities charges (GFCs) and local facility charges (LFCs) on new customers connecting to the system and water main extensions, respectively. Table 9-3 summarizes the existing water GFC/LFC structure, which has been in place since July 17, 2018:

Table 9-3
Current Water GFCs and LFCs (as of July 17, 2018)

	Number of ERUs [1]	Charge
General Facilities Charge (GFC):		
3/4" Meter	1.0	$5,342
1" Meter	2.5	$13,355
1-1/2" Meter	5.0	$26,710
2" Meter	8.0	$42,736
3" Meter	16.0	$85,472
4" Meter	25.0	$133,550
6" Meter	50.0	$267,100
8" Meter	80.0	$427,360
10" Meter	115.0	$614,330
Local Facilities Charge (LFC) per Lineal Foot of Water Main:		
Full Charge		$368
Reduced Charge *(Based on 50% Share of Water Main)*		$184

[1] Based on meter flow equivalency factors established by the American Water Works Association (AWWA).

As shown in Table 9-3, the water GFCs increase with water meter size on the premise that water meter size is an indicator of potential water usage (and potential flows sent into the water system). Note that Table 9-3 does not include the regional capital facilities charge (RCFC) that Cascade Water Alliance imposes on new connections, which is $6,416 per Cascade Equivalent Residential Unit (CERU) as of January 1, 2019. At its September 26, 2018 Board Meeting, Cascade also approved increasing the RCFC per CERU to $6,607 in 2020.

9.3 Development of the Financial Analysis

The financial plan includes a forecast of water utility revenues and expenses from 2018 – 2027, which serves as the basis for evaluating the sufficiency of water revenues at existing rates. The District's 2019 Budget serves as the initial basis for the forecast, as most revenues and expenses are based on an escalation of the amounts budgeted for 2019.

9.3.1 Revenues and Expenses

9.3.1.1 Revenues

The first component of the financial plan reviews the sources of funds for the water utility. Sources of operating revenues include:

- ***Rate Revenues:*** The 2019 Budget estimates that the District will receive about $15.5 million in water rate revenue from its customers during 2018, and $14.9 million during 2019. To forecast future-year revenues at existing rates, the forecast assumes annual customer growth of 1.30% through 2021 based on the recent

growth experienced by the District. Beyond 2021, the assumed growth rate drops to 1.00% per year.

- ***Other Revenues:*** Revenues from customer-related fees such as late charges and penalties are assumed to grow with the customer base at 1.30% per year through 2021 and 1.00% per year thereafter. Investment earnings are calculated on projected fund balances, using an assumed investment earnings rate of 1.25% per year. Developer and overhead charges that recover costs associated with District staff time are escalated with labor costs at 5.00% per year. Other miscellaneous operating revenues are kept at the level projected in the 2019 Budget.

The District imposes GFCs and LFCs on new or expanded customer connections to recover an equitable share of the cost of the infrastructure from which they are benefiting. GFCs are typically assessed on an ERU basis, which the District defines based on water meter size; LFCs are assessed to new customers based on characteristics of the property receiving service.

GFCs and LFCs provide an important source of funding for capital improvement projects and debt attributable to growth-related projects – use of GFC revenue for debt service offsets the financial burden that rates would otherwise have to bear. These capital-related revenues are further discussed under the capital improvement section of this chapter.

9.3.1.2 Expenses

The second part of the financial plan is a review of the water utility's expenses, including:

- ***Operation and Maintenance (O&M) Expenses:*** The 2019 Budget serves as a starting point for the O&M forecast, which adjusts for annual cost escalation depending on the type of expense. The forecast of water purchase costs is based on Cascade Water Alliance's July 2018 forecast, with updates to the 2019 – 2020 projections to reflect the charges adopted by Cascade in September 2018. This forecast indicates increases to the District's payments (excluding RCFCs) averaging about 9.00% per year. Most operating costs are assumed to increase with general inflation at a rate of 3.00% per year, based on input from District staff. Salaries and benefits are assumed to increase by 5.00% per year based on staff input. Variable costs such as electricity and chemicals are escalated with inflation and growth, increasing by 4.30% per year through 2021 and 4.00% per year thereafter.

- ***Taxes:*** The water utility is subject to State excise taxes on its revenues. Rate revenue (excluding irrigation sales, which are deductible) is subject to tax at 5.029%; revenue from GFCs, LFCs, late charges, and other miscellaneous charges are subject to taxation at 1.50%. The District does not track taxes as a direct revenue requirement component; it applies the taxes as a direct mark-up to its rates and charges.

- ***Debt Service:*** The District currently has several outstanding revenue bonds, most recently issuing bonds in 2013 to refund a portion of its 2004 and 2005 Bonds and acquire funding for near-term capital needs. The water utility's share of annual debt service on existing revenue bonds is about 60%, or $1.9 million – this cost is split between the water utility's funds based on an allocation prepared by District staff. The forecast of future debt service includes planned payments on existing debt as well as new debt service associated with any additional debt issuance needed to fund the CIP.

- ***Capital Reinvestment:*** The District transfers funds from the Operating Fund to the Capital Replacement Fund to fund infrastructure replacement needs – while these transfers were historically based on original-cost depreciation, the District has undertaken efforts to better quantify the transfers needed to attain its long-term capital funding goals. As a result of these efforts, the forecast assumes transfers of $5.6 million in 2018, $5.9 million in 2019, $7.1 million in 2020 and increases these transfers to approximately $8.9 million per year by 2027.

- ***Reserve Funding:*** District policy establishes a minimum balance of "working capital" for the Operating Fund to accommodate differences in revenue and expense cycles along with other unforeseen variations in revenues or expenses. It provides for additional rate funding to replenish the balance in this reserve if it falls short of the targeted level.

- ***Capital Projects:*** The 2018 – 2027 Capital Plan (CP) includes $56.5 million in project costs allocable to the water utility. Funding for the CP will come from a mix of sources that include District reserves, ULIDs, DEAs, GFCs, LFCs, and capital reinvestment funding from water rates. Table 9-4 presents a summary of the projected capital expenditures.

The capital funding strategy shown in Table 9-4 indicates that the District expects to have sufficient cash resources in each of its funds to cover the capital improvement projects assigned to that fund. In the case of projects that it expects to fund through DEAs or ULIDs, District staff has confirmed that the completion of those projects is contingent on those funding sources.

Table 9-4
Summary of Water Capital Improvement Projects (Note: Dollars in Thousands, $000s)

Capital Projects (By Funding Type)	2018	2019	2020	2021	2022	2023	2024	2025	2026	2027	Total
Water Operating Fund											
Supply	$ 14	$ 267	$ -	$ 83	$ -	$ -	$ -	$ -	$ -	$ -	$ 364
Booster Pumps	29	-	-	-	-	-	-	-	-	-	29
Storage/Reservoirs	495	3,397	686	-	-	-	1,134	511	-	-	6,223
Water Mains	291	242	-	135	-	-	-	35	-	-	702
General/Other	219	816	688	376	364	817	140	228	388	267	4,304
Total	**$ 1,049**	**$ 4,723**	**$ 1,374**	**$ 593**	**$ 364**	**$ 817**	**$ 1,274**	**$ 773**	**$ 388**	**$ 267**	**$ 11,622**
Water Capital Replacement Fund											
Supply	$ -	$ -	$ -	$ 385	$ -	$ -	$ -	$ -	$ -	$ -	$ 385
Water Mains	59	487	-	-	-	-	-	-	-	-	546
Total	**$ 59**	**$ 487**	**$ -**	**$ 385**	**$ -**	**$ -**	**$ -**	**$ -**	**$ -**	**$ -**	**$ 931**
General Facilities Charge (GFC) Fund											
Supply	$ 6	$ 115	$ -	$ 83	$ -	$ 4,881	$ -	$ -	$ -	$ -	$ 5,084
Booster Pumps	13	-	-	-	-	-	-	-	-	-	13
Storage/Reservoirs	97	1,023	294	-	-	-	612	219	-	475	2,720
Water Mains	299	1,431	124	919	-	47	218	142	62	1,472	4,713
General/Other	274	42	35	-	-	875	-	-	-	-	1,225
Total	**$ 689**	**$ 2,609**	**$ 453**	**$ 1,002**	**$ -**	**$ 5,803**	**$ 830**	**$ 361**	**$ 62**	**$ 1,947**	**$ 13,754**
Local Facilities Charge (LFC) Fund											
Water Mains	$ 31	$ 576	$ 604	$ -	$ -	$ 227	$ 1,065	$ 508	$ 300	$ 508	$ 3,819
Total	**$ 31**	**$ 576**	**$ 604**	**$ -**	**$ -**	**$ 227**	**$ 1,065**	**$ 508**	**$ 300**	**$ 508**	**$ 3,819**
Other Outside Sources (DEA, ULID)											
Water Mains	$ 10,421	$ 317	$ 4,317	$ 2,943	$ 1,454	$ 883	$ 1,303	$ 1,333	$ 883	$ 2,536	$ 26,387
Total	**$ 10,421**	**$ 317**	**$ 4,317**	**$ 2,943**	**$ 1,454**	**$ 883**	**$ 1,303**	**$ 1,333**	**$ 883**	**$ 2,536**	**$ 26,387**
Total Projected Expenditures (2018 Dollars)	**$ 12,248**	**$ 8,712**	**$ 6,748**	**$ 4,923**	**$ 1,818**	**$ 7,730**	**$ 4,472**	**$ 2,974**	**$ 1,633**	**$ 5,258**	**$ 56,514**

Planned Capital Funding Strategy	2018	2019	2020	2021	2022	2023	2024	2025	2026	2027	Total
Operating Fund	$ 1,049	$ 4,723	$ 1,374	$ 593	$ 364	$ 817	$ 1,274	$ 773	$ 388	$ 267	$ 11,622
Capital Replacement Fund	59	487	-	385	-	-	-	-	-	-	931
General Facilities Charge Fund	689	2,609	453	1,002	-	5,803	830	361	62	1,947	13,754
Local Facilities Charge Fund	31	576	604	-	-	227	1,065	508	300	508	3,819
DEA/ULID	10,421	317	4,317	2,943	1,454	883	1,303	1,333	883	2,536	26,387
Total	**$ 12,248**	**$ 8,712**	**$ 6,748**	**$ 4,923**	**$ 1,818**	**$ 7,730**	**$ 4,472**	**$ 2,974**	**$ 1,633**	**$ 5,258**	**$ 56,514**

9.3.2 Internal Sources of Funds

GFCs and LFCs provide funding for capital improvement projects and related debt service. These charges are based on the cost of facilities that provide service – GFCs are based on the cost of facilities that provide a system-wide benefit, while LFCs are based on the cost of facilities with a more localized benefit. By paying these charges, new customers reimburse existing customers for a proportionate share of the investment made in existing infrastructure and contribute toward costs that the District is planning to incur to serve growth. The District maintains separate GFC and LFC Funds to ensure that these revenues are used for their intended purposes. The GFC Fund has been established for a long time. The LFC Fund was only established as a separate fund in 2010; prior to that time, Water LFCs went to the Water Operating Fund. These Funds began 2018 with balances of $7.6 million and $2.4 million, respectively.

The District maintains several other funds for the water utility:

- ***Operating Fund:*** This is the water utility's pool of unrestricted resources, and it derives funding from water rates and other operating revenues. District policy provides for a minimum "working capital" balance of 90 days (about 24.7%) of budgeted operating expenses to manage routine differences between revenue and expense cycles and unforeseen variations in revenues or expenses. Based on estimated 2018 operating expenses, the policy results in a target Operating Fund balance of approximately $2.2 million. Per District records, this fund began 2018 with a balance of $13.6 million.

- ***Capital Replacement Fund:*** Following the 2006 Capital Reinvestment Study, the District created this fund to set aside money for replacement projects as part of a long-term asset management strategy. District policy provides for annual rate-funded transfers into this fund – depending on capital needs, this fund is expected to accrue a significant balance over time that can be drawn down relatively quickly. Assuming the District can (a) issue debt, (b) use money from other funds, or (c) defer capital improvement projects, this analysis does not assume an explicit minimum balance for this fund. District records indicate a beginning 2019 balance of $26.1 million in this fund.

- ***Bond Fund & Reserve Fund:*** This District's bond covenants also discuss two reserves related to outstanding bonds. The District transfers money into the Bond Fund to make principal and interest payments on outstanding bonds; the covenants require that the District maintain a certain balance (generally based on annual revenue bond debt service) in the Reserve Fund to protect against repayment risk. Though these funds are restricted and are not available to fund capital costs, it is worth noting that the District can release the reserve associated with a given bond when that bond is fully repaid.

9.3.3 External Sources of Funds

Because GFC and LFC revenue streams can be highly variable depending on the level of development occurring in the District's service area, there are times when the GFC Fund and LFC Fund will not be able to fully fund the capital improvement project costs and debt service assigned to them. In such cases, the District must consider delaying projects, tapping into its other reserves, and/or pursuing funding from external sources.

Discussed in further detail below, there are various grant and loan programs that can be used to fund a portion of the District's CP. It is important to note that these sources do not provide full funding of construction projects and would require supplementary funding from the District's cash resources to fully fund the planned projects. Nevertheless, the District should monitor future opportunities to obtain these potential funding sources.

- **Public Works Trust Fund (RCW 43.155):** Cities, counties, special purpose districts, public utility districts, and quasi-municipal governments are eligible to receive loans from the PWTF. Eligible projects include repair, replacement, and construction of infrastructure for domestic water, sanitary wastewater, stormwater, solid waste, road, and bridge projects that improve public health and safety, respond to environmental issues, promote economic development, or upgrade system performance. No funding is currently available for Construction loans, but funding may become available in the 2019 – 2021 biennium if the State Legislature approves the capital budget. Further detail is available at http://www.commerce.wa.gov/building-infrastructure/pwb-home-page.

- **Drinking Water State Revolving Fund (DWSRF):** DWSRF funding has historically targeted protection of public health and compliance with drinking water regulations. Loan repayments can range from 20 to 30 years and in some cases, provide partial loan forgiveness. Applicants need an approved water system plan (or plan amendment) containing the DWSRF project prior to submitting an application. All public water systems that receive a DWSRF loan must undergo an environmental review, a cultural review, and an Investment-Grade Efficiency Audit (IGEA). The IGEA is an effort to apply energy efficiency to water systems and may be financed as part of the DWSRF loan. The 2018 loan cycle included approximately $20 million in total funding (with a maximum of $3 million per project) and ran from October 1st – November 30th, 2018.

  More information regarding the DWSRF Loan Program can be found at https://www.doh.wa.gov/CommunityandEnvironment/DrinkingWater/WaterSystemAssistance/DrinkingWaterStateRevolvingFundDWSRF.

- **Community Economic Revitalization Board (RCW 43.160):** A federal program administered by the State Department of Community Trade and Economic Development, this program provides grants and loans for infrastructure improvements including utility projects. It prioritizes projects that create or retain jobs for low and moderate-income residents – because it is need-based and

intended to be “last-resort” relative to other funding sources, the District may not qualify for assistance under this program.

- **Infrastructure Assistance Coordinating Council:** The Infrastructure Assistance Coordinating Council (Council) is comprised of state and local agencies whose function is to provide funding for infrastructure repair and development. Its purpose is to assist local governments in coordinating funding efforts for infrastructure improvements, and can be a valuable resource to provide awareness of any new funding opportunities.

- **Revenue Bonds:** Revenue bonds are another external source of funding for capital improvement projects and are the most common source of funds for construction of major utility improvements. A key benefit of revenue bonds is the exemption of federal income tax – however, they are generally seen as less desirable than low-cost loans and grants due to their relatively higher interest rates. Revenue bonds also come with coverage requirements, where the utility must generate a certain amount of “net revenue” (operating revenue net of operating expenses) to protect bondholders against repayment risk. District bond covenants define this amount as 125% of annual debt service, though the District targets coverage at 150% of annual debt service for planning purposes.

  Other bond financing approaches include utility local improvement districts (ULIDs), special assessment districts (SADs) and other funding for projects that serve and benefit a limited service area within the District’s total service area. The costs of those improvements are shared only by those customers benefiting from them. The District has funded some capital improvements previously through ULIDs. The District’s 2017 trial balance report indicates that the water utility has a total balance of about $1.1 million in assessments receivable as of the end of 2017.

- **Developer Contributions:** Some projects are identified in the Capital Plan with an expectation to be constructed by developer extension agreements (DEAs). Where possible and equitable, the District attempts to use DEAs to construct facilities in order to avoid charging its other customers for development-related projects of localized benefit.

While the above list of possible grant, loan and other funding opportunities for the District is not exhaustive, it does however, highlight the most probable outside funding sources available to the District for its capital improvements.

9.4 Water General Facilities Charge

General facilities charges (GFCs), a form of connection charge authorized in the Revised Code of Washington (RCW) 57.08.005 (11), are imposed as a condition of service on new customers connecting to the system. In addition to any other costs related to physically connecting a customer to the system, the GFC is typically based on a blend of historical and planned future capital investment in system infrastructure – its underlying

premise is that growth (future customers) will pay for an equitable share of the costs that the utility has incurred (or will incur) to provide capacity to serve new customers.

While the RCW does not explicitly define a methodology for calculating GFCs, the GFC is generally calculated by dividing an allocable "cost of the system" by the applicable customer base served by the system to arrive at a cost per unit of capacity. The ensuing sections discuss the various aspects of the GFC calculation in further detail.

9.4.1 Existing Cost Basis

The GFC cost basis includes costs associated with existing assets to recognize that those assets will provide benefit to new customers. In addition to this documented cost of existing assets, RCW 57.08.005 (11) allows the District to recover a provision for interest accrued on assets. Conceptually, this interest provision (which is limited to ten years of interest accrual on each asset) attempts to account for opportunity costs that the District's customers incurred by supporting investments in infrastructure rather than having the money available for investment or other uses. This cost basis is adjusted to reflect:

- **Construction Work in Progress:** The District has substantial investments in capital improvement projects that are currently underway – these projects are not completed or booked as assets, but do represent an investment made by the District in the system. Consequently, the cost of construction work in progress is added to the GFC cost basis.

- **Contributed and ULID-Funded Assets:** Assets funded by developer extension agreements (DEAs) and utility local improvement districts (ULIDs) are excluded from the cost basis on the premise that the GFC should only recover costs actually incurred by the District. ULID-funded assets are left out of the GFC cost basis to avoid double charging customers for assets that they are paying for through ULID assessments.

- **Provision for Asset Retirements Due to 10-Year CP:** The cost basis includes a deduction for the estimated cost of the assets being replaced as part of projects in the CP. This adjustment intends to avoid double charging customers for an asset and its replacement, recognizing that the District must replace existing assets at a cost that materially exceeds the installation cost of the other asset.

- **Assets Not Included in GFC:** The GFC cost basis excludes costs associated with meters and service lines, as customers typically pay for these facilities of localized benefit directly. For consistency with Rule No. 51 of the Governmental Accounting Standards Board (GASB), it also excludes costs related to the District's Water Comprehensive Plans as intangible assets that should be expensed rather than capitalized.

- **Net Outstanding Debt Principal:** When a new customer connects to the District's system and becomes a ratepayer, they will pay for a proportionate share of the

annual debt service payments associated with the District's outstanding debt. To recognize this and avoid double charging customers for assets through GFCs and rates, the cost basis reflects a deduction for outstanding debt principal net of available cash balances.

9.4.2 Future Cost Basis

RCW 57.08.005 (11) allows the District to recover costs associated with future capital improvement projects that it plans to undertake within a ten-year planning period, provided that they are part of an adopted comprehensive plan. The capital costs included in the future cost basis are based on the capital plan summarized in Table 9-4. The future cost basis also reflects several adjustments:

- **Grants/Contributions:** Projects funded by grants, developer extension agreements (DEAs), or utility local improvement districts (ULIDs) are excluded from the future cost basis on the grounds that the GFC intends to recover costs incurred by the District. The District has identified projects that will likely be funded through ULIDs and/or DEAs.

- **LFC-Funded Projects:** Assets funded by local facilities charges (LFCs) are excluded from the GFC cost basis to recognize that new customers will pay for them through their payment of the District's LFC. While this adjustment primarily intends to avoid double charging customers for assets, it is also worth noting that the GFC intends to recover costs associated with facilities of general system benefit – to the extent that a project's costs are assigned to the LFC cost basis, it is likely that the project is of localized benefit rather than general system benefit.

9.4.3 Customer Base

The customer base is expressed in terms of equivalent residential units (ERUs), which the District defines based on water meter size. It is separable into two groups:

- **Existing Customers:** Per Table 2-15, the existing customer base consisted of 23,726 ERUs as of the end of 2017.

- **Growth:** The forecast of growth is based on the growth forecast shown in Table 2-15, with growth projections beyond 2037 based on the average annual growth rate estimated for the 2032 – 2037 period.

9.4.4 GFC Calculation

The District's GFC calculation is based on an "average cost" methodology, which computes a charge per ERU by dividing allocable costs by the applicable number of ERUs. The water GFC is split into seven functional categories: supply, storage, treatment, mains, pumping, hydrants, and general system assets. The GFC calculation considers growth over the expected useful life of the District's assets, which varies for each

category. Estimates prepared by District staff project an average useful life of 20 years for wells, 120 years for reservoirs, 40 years for treatment facilities, 96 years for mains, and 40 years for booster stations; general system assets are assigned an average life of 10 years. For example, the “mains” component of the GFC calculation considers existing customers and growth over 96 years (or growth to buildout, whichever is less).

Table 9-5 summarizes the updated water GFC calculation.

The District’s water GFC was most recently calculated in 2014 to be $4,729 per ERU; the existing GFC ($5,342 per ERU) reflects a series of inflationary adjustments. Table 9-5 shows that the updated calculation results in a GFC that is approximately 2% lower than the existing charge. It is important to note that the District’s GFC indexing policy attempts to use inflationary adjustments to approximate the addition of assets, the accrual of interest, and changes to the CP in between updates. Periodic recalibrations of the GFC are appropriate and may result in either increases or decreases depending on how the key components of the GFC calculation change over time.

In recent years, the District has adjusted its GFCs in July – as part of the upcoming review, it intends to reconsider aspects of the GFC methodology. Pending further direction from the District, the financial plan assumes that the current GFCs remain in place.

Table 9-5
Updated Water GFC Calculation (Note: Dollars in Thousands, $000s)

Water GFC Calculation	Supply	Storage	Treatment	Mains	Pumping	Hydrants	General	Total
Existing Cost Basis								
Plant-In-Service as of 12/31/17	$10,851	$18,185	$6,347	$79,370	$3,659	$7,201	$16,436	$142,048
Less: Contributed Assets	0	(60)	0	(45,630)	(19)	(5,258)	(22)	(50,989)
Less: Provision for Asset Retirements Due to 10-Year CP	(365)	0	0	(116)	0	0	(1,416)	(1,897)
Plus: Interest Accrued on Utility-Funded Assets	5,314	9,828	2,662	17,756	1,654	1,126	5,459	43,799
Plus: Construction In Progress	0	0	0	1,358	181	0	5	1,543
Net Existing Cost Basis	$15,799	$27,953	$9,009	$52,738	$5,475	$3,069	$20,462	$134,505
Future Cost Basis								
2018-2027 CP (Uninflated)	$5,833	$9,656	$0	$35,747	$42	$0	$5,199	$56,478
Less: DEA/ULID-Funded Projects	0	(420)	0	(25,967)	0	0	0	(26,387)
Less: LFC-Funded Projects	0	0	0	(3,819)	0	0	0	(3,819)
Net Future Cost Basis	$5,833	$9,236	$0	$5,961	$42	$0	$5,199	$26,272
Total Cost Basis (A)	**$21,632**	**$37,190**	**$9,009**	**$58,699**	**$5,517**	**$3,069**	**$25,661**	**$160,777**
Customer Base								
Existing ERUs	24,306	24,306	24,306	24,306	24,306	24,306	24,306	
Projected Growth Over Useful Life of Assets **[1]**	3,412	8,700	5,012	8,509	5,012	7,362	2,919	
Total Customer Base In ERUs (B)	**27,717**	**33,006**	**29,318**	**32,815**	**29,318**	**31,668**	**27,225**	
Water GFC per ERU (A / B × $1,000)	**$780**	**$1,127**	**$307**	**$1,789**	**$188**	**$97**	**$943**	**$5,231**

Water GFC By Meter Size	Existing	Proposed
3/4" Meter	$5,342	$5,231
1" Meter	$13,355	$13,077
1-1/2" Meter	$26,710	$26,155
2" Meter	$42,736	$41,848
3" Meter	$85,472	$83,695
4" Meter	$133,550	$130,774
6" Meter	$267,100	$261,548
8" Meter	$427,360	$418,476
10" Meter	$614,330	$601,559

	Supply	Storage	Treatment	Mains	Pumping	Hydrants	General
[1] Useful Life of Assets	89 Years	120 Years	40 Years	96 Years	40 Years	75 Years	10 Years

9.5 Summary of the Financial Analysis

Table 9-6 provides a summary of the financial plan and resulting financial status of the water utility. This is an abbreviated summary of a more detailed analysis that was developed for the District and provides a summary of the major elements of the District's analysis, along with the findings and conclusions. The detailed analysis can be found in Appendix T of this Plan.

Table 9-6 indicates that at the 2019 rates shown in Table 9-2, the water utility's revenues are expected to cover O&M and debt service but appear to fall short of covering the full future capital funding obligations assigned to the Operating Fund. The Operating Fund appears to have enough cash to fund several years of capital needs, but Table 9-6 shows it running out of money by 2023. To cover the utility's capital needs and maintain the District's financial position, the rate revenue strategy shown in Table 9-6 contemplates annual water rate increases of 3.75%.

It is important to note that this financial plan relies on a variety of assumptions including expectations of near-term system growth. In the event that the assumed growth is not realized, the resulting shortfalls in revenue from rates, GFCs, and LFCs may create a need for additional rate increases. Adopting this comprehensive planning document does not bind the District to implement the proposed rate adjustments. This financial plan is advisory to the Department of Health and intends to show that the findings and recommendations within this Plan are affordable within the District's service area. The District reviews its utility revenue needs regularly, and will determine the need for future rate adjustments prior to implementation.

9.6 Rate Impacts

Table 9-7 shows the near-term water rate forecast, applying the rate increases shown in Table 9-6 across-the-board to the District's existing water rate structure. The U.S. Environmental Protection Agency, Washington State Department of Health, and the Public Works Board use an affordability index to prioritize low-cost loan awards depending on whether water rates exceed 2.0% of the median household income for the service area. U.S. Census Bureau data indicates that median household income levels averaged $157,271 in the City of Sammamish, $100,844 in the City of Issaquah, and $83,571 in King County from 2013 – 2017. Depending on location within the District's service area, the affordability threshold for the monthly water bill varies from $139.29 to $262.12. The monthly single-family water rate shown in Table 9-7 is expected to remain within this threshold during the ten-year planning period, suggesting that the District will be able to implement the planned capital improvement projects while maintaining affordable water rates.

Table 9-6
Summary of the Ten-Year Financial Plan (Note: Dollars in Thousands, $000s)

	2018	2019	2020	2021	2022	2023	2024	2025	2026	2027
Revenue										
Water Rate Revenue at Existing Rates	$ 15,548	$ 14,887	$ 15,080	$ 15,276	$ 15,429	$ 15,583	$ 15,739	$ 15,896	$ 16,055	$ 16,216
Other Revenue	1,270	1,187	1,164	1,174	1,191	1,213	1,232	1,246	1,269	1,301
Total	**$ 16,818**	**$ 16,074**	**$ 16,244**	**$ 16,450**	**$ 16,620**	**$ 16,797**	**$ 16,971**	**$ 17,142**	**$ 17,325**	**$ 17,517**
Expenses										
Water Purchases	$ 1,546	$ 1,677	$ 1,730	$ 2,008	$ 2,218	$ 2,430	$ 2,651	$ 2,853	$ 3,080	$ 3,319
Other Operating Expenses	6,629	7,472	7,807	8,109	8,425	8,777	9,176	9,562	10,026	10,425
Total	**$ 8,175**	**$ 9,149**	**$ 9,537**	**$ 10,117**	**$ 10,643**	**$ 11,208**	**$ 11,827**	**$ 12,415**	**$ 13,106**	**$ 13,744**
Net Available for Debt Service & Capital	***$ 8,644***	***$ 6,925***	***$ 6,707***	***$ 6,333***	***$ 5,978***	***$ 5,589***	***$ 5,144***	***$ 4,727***	***$ 4,218***	***$ 3,774***
Appropriations to Debt Service Fund	$ 1,179	$ 579	$ 236	$ 475	$ 474	$ 471	$ 471	$ 369	$ 226	$ 2
Net Available for Capital	***$ 7,465***	***$ 6,346***	***$ 6,471***	***$ 5,859***	***$ 5,504***	***$ 5,118***	***$ 4,673***	***$ 4,358***	***$ 3,992***	***$ 3,772***
Capital Reinvestment Transfer	$ 5,601	$ 5,926	$ 7,069	$ 7,302	$ 7,543	$ 7,792	$ 8,049	$ 8,315	$ 8,589	$ 8,872
Rate-Funded Capital Projects	1,105	4,783	1,437	659	434	890	1,350	853	472	355
Transfer to LFC Fund for Capital Projects	-	-	-	-	-	-	-	-	-	80
Total Rate-Funded Capital Costs	$ 6,706	$ 10,708	$ 8,506	$ 7,961	$ 7,977	$ 8,682	$ 9,399	$ 9,168	$ 9,061	$ 9,307
Operating Fund Summary at Existing Water Rates:										
Beginning Fund Balance	$ 13,636	$ 14,395	$ 10,032	$ 7,998	$ 5,895	$ 3,422	$ (142)	$ (4,869)	$ (9,678)	$ 3,422
Net Cash Flow After O&M, Debt Service, & Capital	759	(4,362)	(2,035)	(2,103)	(2,473)	(3,564)	(4,726)	(4,810)	(5,068)	(5,535)
Ending Fund Balance	$ 14,395	$ 10,032	$ 7,998	$ 5,895	$ 3,422	$ (142)	$ (4,869)	$ (9,678)	$ (14,747)	$ (2,113)
Minimum Fund Balance Required	*$ 2,187*	*$ 2,423*	*$ 2,525*	*$ 2,670*	*$ 2,801*	*$ 2,942*	*$ 3,096*	*$ 3,243*	*$ 3,416*	*$ 3,575*
Surplus (Deficit)	$ 12,207	$ 7,609	$ 5,472	$ 3,224	$ 621	$ (3,084)	$ (7,965)	$ (12,922)	$ (18,163)	$ (5,688)
Coverage Ratio Realized	4.81	3.70	26.37	25.48	23.34	22.81	21.29	20.35	25.18	23.68
Annual Water Rate Adjustment		**3.75%**	**3.75%**	**3.75%**	**3.75%**	**3.75%**	**3.75%**	**3.75%**	**3.75%**	**3.75%**
Operating Fund Summary After Rate Adjustments:										
Water Rate Revenue	$ 15,548	$ 15,445	$ 16,233	$ 17,060	$ 17,877	$ 18,733	$ 19,629	$ 20,569	$ 21,554	$ 22,586
Beginning Fund Balance	$ 13,636	$ 14,395	$ 10,591	$ 9,708	$ 9,389	$ 9,364	$ 8,949	$ 8,113	$ 7,976	$ 8,406
Net Cash Flow After O&M, Debt Service, & Capital	759	(3,804)	(883)	(319)	(25)	(415)	(836)	(137)	430	835
Ending Operating Fund Balance	$ 14,395	$ 10,591	$ 9,708	$ 9,389	$ 9,364	$ 8,949	$ 8,113	$ 7,976	$ 8,406	$ 9,241
Minimum Operating Fund Balance Required	$ 2,187	$ 2,423	$ 2,525	$ 2,670	$ 2,801	$ 2,942	$ 3,096	$ 3,243	$ 3,416	$ 3,575
Coverage Ratio Realized	4.81	3.98	30.06	31.19	31.09	32.94	33.70	35.34	48.52	50.59

Table 9-7
Water Rate Forecast

Water Rate Forecast	2018	2019	2020	2021	2022	2023	2024	2025	2026	2027
Across-The-Board Rate Adjustment		***3.75%***	***3.75%***	***3.75%***	***3.75%***	***3.75%***	***3.75%***	***3.75%***	***3.75%***	***3.75%***
Monthly Fixed Charge										
Per Meter *(Excluding Multi-Family Meters)*										
3/4" Meter	$29.75	$30.87	$32.03	$33.23	$34.48	$35.77	$37.11	$38.50	$39.94	$41.44
1" Meter	$63.88	$66.28	$68.77	$71.35	$74.03	$76.81	$79.69	$82.68	$85.78	$89.00
1-1/2" Meter	$120.76	$125.29	$129.99	$134.86	$139.92	$145.17	$150.61	$156.26	$162.12	$168.20
2" Meter	$189.02	$196.11	$203.46	$211.09	$219.01	$227.22	$235.74	$244.58	$253.75	$263.27
3" Meter	$371.02	$384.93	$399.36	$414.34	$429.88	$446.00	$462.73	$480.08	$498.08	$516.76
4" Meter	$575.79	$597.39	$619.79	$643.03	$667.14	$692.16	$718.12	$745.05	$772.99	$801.98
Per Multi-Family Dwelling Unit	$17.36	$17.92	$18.59	$19.29	$20.01	$20.76	$21.54	$22.35	$23.19	$24.06
Volume Charge per ccf										
Single-Family: Block 1 (≤ 6 ccf)	$1.95	$2.02	$2.10	$2.18	$2.26	$2.34	$2.43	$2.52	$2.61	$2.71
Single-Family: Block 2 (6 - 12 ccf)	$2.37	$2.46	$2.55	$2.65	$2.75	$2.85	$2.96	$3.07	$3.19	$3.31
Single-Family: Block 3 (12 - 25 ccf)	$3.84	$3.98	$4.13	$4.28	$4.44	$4.61	$4.78	$4.96	$5.15	$5.34
Single-Family: Block 4 (> 25 ccf)	$6.39	$6.63	$6.88	$7.14	$7.41	$7.69	$7.98	$8.28	$8.59	$8.91
Multi-Family & Commercial: November - June	$1.57	$1.63	$1.69	$1.75	$1.82	$1.89	$1.96	$2.03	$2.11	$2.19
Multi-Family & Commercial: July - October	$2.31	$2.40	$2.49	$2.58	$2.68	$2.78	$2.88	$2.99	$3.10	$3.22
Unaudited Irrigation: November - June	$10.48	$10.87	$11.28	$11.70	$12.14	$12.60	$13.07	$13.56	$14.07	$14.60
Unaudited Irrigation: July - October	$10.87	$11.28	$11.70	$12.14	$12.60	$13.07	$13.56	$14.07	$14.60	$15.15
Audited Irrigation: November - June	$6.21	$6.44	$6.68	$6.93	$7.19	$7.46	$7.74	$8.03	$8.33	$8.64
Audited Irrigation: July - October	$6.39	$6.63	$6.88	$7.14	$7.41	$7.69	$7.98	$8.28	$8.59	$8.91

Affordability Evaluation	2018	2019	2020	2021	2022	2023	2024	2025	2026	2027
Monthly Single-Family Water Bill @ 5.5 ccf	$40.48	$41.98	$43.55	$45.21	$46.92	$48.67	$50.46	$52.37	$54.32	$56.33
Bill as a Percent of Median Household Income (MHI):										
City of Sammamish (MHI: $157,271)	0.31%	0.32%	0.33%	0.34%	0.36%	0.37%	0.39%	0.40%	0.41%	0.43%
City of Issaquah (MHI: $100,844)	0.48%	0.50%	0.52%	0.54%	0.56%	0.58%	0.60%	0.62%	0.65%	0.67%
King County (MHI: $83,571)	0.58%	0.60%	0.63%	0.65%	0.67%	0.70%	0.72%	0.75%	0.78%	0.81%

9.7 Summary

The results presented in this chapter suggest that the water utility will require revenue increases to fund projected O&M, capital, and debt service requirements over the ten-year planning horizon. This chapter identifies the overall level of rate impact that may occur should the capital plan provided in Chapter 8 move forward. It also confirms that the District's water GFC is adequate to recover an equitable share of system costs from growth, justifying a minor recalibration adjustment to reflect differences between the District's inflationary adjustments to the GFC and actual changes in the key components of the charge (e.g. asset additions, interest accrual, capital plan changes).

Again, it is important to remember that this financial plan is based on various assumptions that may change over time as new information becomes available. The District reviews the financial needs for its utilities as part of its annual budgeting process, occasionally conducting more comprehensive rate studies. Table 9-6 provides current projections of the near-term revenue adjustments, but on an annual basis the District will confirm or determine the actual revenue adjustments necessary to move forward with the adopted capital plan for each year.

The District has demonstrated its commitment to responsibly managing its utilities by past rate adjustments and by funding adequate levels of operations, capital, reserves, and capital funding from rates. Continued prudent fiscal management will enable the water utility to continue to operate on a financially sound basis.

CHAPTER TEN – IMPLEMENTATION

This page intentionally left blank.

10. Implementation

Table of Contents

10.1 Chapter 1: Description of Water System.....10-1
10.1.1 Implementation Considerations (Chapter 1) 10-1
Regulations 10-1
Service Area..... 10-2
Service Provision..... 10-2
10.2 Chapter 2: Basic Planning Data and Water Demand Forecast10-2
10.2.1 Implementation Considerations (Chapter 2) 10-3
10.3 Chapter 3: System Analysis.....10-3
10.3.1 Implementation Considerations (Chapter 3) 10-3
10.4 Chapter 4: Conservation Program, Supply Analysis, Water Rights, System Reliability and Interties 10-3
10.4.1 Implementation Considerations (Chapter 4) 10-4
Conservation Program..... 10-4
Source of Supply Strategy, Water Rights Evaluation, Aquifer Storage and Recovery Program, Water System Reliability and Interties .. 10-4
10.5 Chapter 5: Source Water Protection 10-5
10.5.1 Implementation Considerations (Chapter 5) 10-5
10.6 Chapter 6: Operations and Maintenance Program 10-6
10.6.1 Implementation Considerations (Chapter 6) 10-6
Training and Management..... 10-6
Water Quality Requirements 10-7
Emergency Response, Safety and Cross-Connection Control Programs 10-8
10.7 Chapter 7: Distribution Facilities Design and Construction Standards.....10-9
10.7.1 Implementation Considerations (Chapter 7) 10-9
10.8 Chapter 8: Capital Plan 10-9
10.8.1 Implementation Considerations (Chapter 8) 10-9
10.9 Chapter 9: Finance Plan.....10-10
10.9.1 Implementation Considerations (Chapter 9) 10-10
Rates 10-10
General Facility Charge..... 10-10
Funding Capital Improvement Projects 10-10

This page intentionally left blank.

10. Implementation

This Water Comprehensive Plan (Plan) has been developed as a road map to guide the District into the future and ensure that it can continue to provide high-quality and reliable water service to its customers. The preceding chapters have documented in detail the facilities and operation of the water system, identified system deficiencies, described improvements necessary to maintain a fully functioning system that is compliant with regulatory requirements and industry standards, and confirmed that the District can continue operating under a financial framework that maintains affordable costs to customers.

Environmental review is required of water comprehensive plans for purveyors serving more than 1,000 connections by the State Environmental Policy Act (SEPA). A SEPA checklist was completed for this Plan and a Determination of Non-Significance was issued by the District in February, 2019. Copies of both documents can be found in Appendix U. The Plan identifies a Capital Plan (CP) to cover a 20-year planning period; details regarding specific components of the CP are not available at this time. Therefore, the SEPA checklist discusses the CP at a programmatic level, and is addressed as a non-project action. Each component of the CP will undergo future project site-specific SEPA review as components begin design for implementation. Any site specific environmental issues or concerns will be identified and addressed for each component of the CP during that future project site-specific SEPA review.

Throughout the Plan, objectives, policies, and program approaches relating to various elements of system management are discussed. A summary list of such items that contain key implementation considerations regarding the future direction of the District is provided below, organized by Plan chapter and identified by “filled dot” bullets. Where appropriate, a measurement method has been provided, and identified by “open dot” bullets.

10.1 Chapter 1: Description of Water System

The District water system description describes the physical components of the system and also the areal extent of the existing District service area, and requirements for provision of water service. The future service area extent was initially defined in conjunction with adjacent purveyors starting with the East King County Coordinated Water Service Plan. Service area expansion is accomplished through annexations. Annexations currently in progress are described, and others identified for action in the near future are noted. The requirements for provision of District service are described, as developed to meet regulations and modified through experience as the District has grown to provide a high level of service.

10.1.1 Implementation Considerations (Chapter 1)

Regulations

- Comply with regulations from local, state and federal agencies.

  - Maintain a Green Operating Permit.
- Initiate discussions with land use agencies for potential franchises.

Service Area

- Complete withdrawal of territory from the District's existing Corporate Boundary where service is provided by the City of Issaquah, including approval from Cascade Water Alliance, if required.
- Pursue annexation of territory for expanded service area when requested by property owners that would be changing water service boundaries between water purveyors.
  - Obtain approval for expanded service area from Cascade Water Alliance in conjunction with the annexation action.
  - Complete the M-Brooke transfer of service area from Ames Lake Water Association and annexation to the District in 2019.
- Prioritize completion of annexations where the District is currently providing service.

Service Provision

- Require new water service connections to be from water mains located adjacent to the property, or where approved by the District, to a main not adjacent to the property under a Non-Standard Service Line Agreement.
- Provide processes for the extension of water facilities to provide for direct service through Developer Extension Agreements, Utility Local Improvement Districts, or in certain cases by a District Capital Improvement Project.
- Consider consolidation of existing Group A or Group B water systems to the District on a case-by-case basis.
- Require any new house or development within the District's future water service area, where water service from the District is not feasible, to execute an Agreement for Future Connection for Water Service from the District per requirements of land agency codes.
- Provide a process for development of new Group B systems for situations where direct connection to the District's system is not possible; including execution of an Agreement for Future Connection for Water Service from the District, and use of a private Water System Operator when operating as a Group B system.
- Require backflow prevention devices to be installed, certified and tested prior to provision of service.
- Require any auxiliary water service to a property be separated from District service by an air gap and appropriate cross-connection control devices.
- Collect connection charges prior to provision of service.

10.2 Chapter 2: Basic Planning Data and Water Demand Forecast

Development of water demand forecasts is based on the number and type of customers expected including the population residing in the District, as well as commercial, industrial and public-institutional customers. The future forecast builds on existing customers and projected additions from development proposals and land use jurisdiction zoning and growth forecasts. Existing water use factors are adjusted for potential conservation. The demand forecasts feed the future system analysis and the

capital plan.

10.2.1 Implementation Considerations (Chapter 2)

- Track District water use
  - Annually track and compare District water production and purchases with water use data and include results in the annual Water Use Efficiency Report.
  - Annually track water use demands by customer type.
  - As Automatic Meter Infrastructure (AMI) data collection and analysis is refined, track water use demands by customer type seasonally and/or monthly.
- Keep District demand forecasts up-to-date
  - Annually update near-term ERU forecast based on current development proposals with the District.
  - Track the City of Sammamish implementation of the Town Center Plan by meeting with City of Sammamish personnel as development proposals are received and when Town Center planning is further developed and/or modified.
  - At least every five years, update the long-term ERU forecast based upon current land-use planning data and updated analysis of undeveloped or under- developed property ERU buildout capacity.

10.3 Chapter 3: System Analysis

The District's physical water system is analyzed to see whether it meets operational parameters for both existing and future conditions. The analysis identifies existing deficiencies and future requirements. The results are used to develop the Capital Plan.

10.3.1 Implementation Considerations (Chapter 3)

- Meet DOH guidelines for source adequacy and storage capacity.
- Update water system model as new assets and demands are added.
  - Implement a process for quarterly updates to the model, in coordination with the addition of new facilities to the District's facility mapping.
- Complete development of an Extended Period Simulation (EPS) hydraulic model in 2019.
- Verify water model calibration with regular retesting and adjustment.
  - Water department maintenance program to include calibration measurements at least once per year, in conjunction with regularly scheduled flow tests or flushing where possible.
- Develop an integration between AMI data and the hydraulic model
- Evaluate the feasibility of conversion of the 550 Pressure Zone to the blended supply area by 2022.
- Evaluate new Capital Improvement Projects not included in the modeling done for this Comprehensive Plan with review through the hydraulic model.

10.4 Chapter 4: Conservation Program, Supply Analysis, Water Rights, System Reliability and Interties

The District water supply is provided through a combination of groundwater, regional surface water and by limiting demand through the conservation program. The District's strategy has been to utilize the groundwater source to the extent possible and limit use of the regional surface water to reduce overall cost. .

10.4.1 Implementation Considerations (Chapter 4)

Conservation Program

- Distribute annual report per the Municipal Water Law Water Use Efficiency Rule.
  - Annual distribution of the Water Use Efficiency Report.
- Participate in implementation of the Cascade Conservation Program to meet the Cascade adopted 2019 conservation goal to save 0.6 million gallons per day (MGD) on an annual basis and 1.0 MGD on a peak season basis by 2020. (Goals are aggregate for all seven Cascade members.)
  - Coordinate implementation of the District Conservation Program with the Cascade Water Conservation Program.
  - Maintain a presence on the Cascade Conservation Committee.
  - Obtain and track metrics for Cascade measures implemented within the District.
  - Partner with Cascade on events within the District's service area, providing District staff resources to improve communication of the District-specific information.
  - Confer with Cascade to ensure the Cascade Conservation Program design recognizes the unique opportunities within the District.
- Implement District's independent Water Conservation measures.
  - Roll out the new customer service portal in 2019 to provide customers with the ability to track their water use from AMI data, including high water consumption alerts, leak alerts and general water use.
  - Develop outreach to customers on the use of AMI data
  - Using AMI data, identify segments of the customer base, where targeted conservation efforts may have the greatest impact.
  - Contact all customers using the Irrigation Audit program by the end of 2019 to provide them direction on how to track their irrigation water use using the AMI data through the Customer Service Portal.
- Review the District rate model's orientation toward encouraging conservation and water efficiency.

Source of Supply Strategy, Water Rights Evaluation, Aquifer Storage and Recovery Program, Water System Reliability and Interties

- Apply a supply strategy using multiple sources including groundwater supply, an aquifer storage and recovery program, regional supplies and conservation to provide flexibility and reliability, while considering the least cost of water production and agreements with Cascade Water Alliance and adjacent purveyors.
  - Work with Cascade Water Alliance membership to provide consideration of independent supply water rights in membership responsibilities.
- Operate the District's system to generally utilize the groundwater source first, but keep demands for regional water supply at a relatively constant rate over the course of a week.

  - Review water supply source records on a monthly basis, compare actual supply source against the supply strategy, and adjust supply sources as necessary to reflect demand and the current source conditions.
- Pursue additional points of withdrawal applications when necessary to allow full utilization of existing water rights.
  - Complete permanent additional point of withdrawal application for Well 7 and 8 water rights to Well 9 in 2019.
- Investigate potential transfer of water rights from water systems within the District's service area as they are identified.
- Initiate investigation for potential expansion of water rights available for use, through cooperative arrangements with adjacent purveyors by 2025. Include potential seasonal use in this investigation.
- Evaluate ongoing implementation of ASR based on water recovery right.

10.5 Chapter 5: Source Water Protection

The Wellhead Protection Program is required by federal and state law, to help protect the groundwater sources from contamination. The program is focused on education of persons that may come in contact with materials that could be deleterious to the groundwater supply.

10.5.1 Implementation Considerations (Chapter 5)

- Periodically update the contaminant source inventory within the Wellhead Protection Area (WHPA) Boundaries annually.
  - Complete a windshield survey for additional potential contaminant sources.
  - Notify all owners/operators of potential sources of contamination within the WHPA boundaries.
  - Send letters to all owners/operators of potential contaminant sources by September 1 each year.
  - Notify emergency responders of the potential contamination sources within the WHPA boundaries by providing the updated potential contaminant sources list to Eastside Fire & Rescue and Fire District #34 by September 1st each year.
- Request City of Sammamish to implement a Groundwater Quality Protection inspection program for on-site storage of hazardous materials in identified WHPA. (Similar to the City of Issaquah program included in the Issaquah Municipal Code (IMC 13.29).)
- Advocate for Land Use Agency stormwater management regulations that preclude stormwater injection (UIC) or other related risks to the groundwater.
- Provide the land use jurisdictions with refined WHPA boundaries for the District wells and ensure they are included as part of the jurisdictions' Critical Areas mapping (CARA Class 1 and 2).
  - Review any updates to the CARA for Issaquah, Sammamish and King County to ensure they are in agreement with Wellhead Protection boundaries developed for each District source.
- Monitor land use proposals to identify potential discharges into the District's identified WHPA (CARA Class 1 and 2) that could impact District groundwater supplies.

- Provide formal responses to any that require additional study prior to approval of such discharges.
- Participate in the Department of Ecology update to CARA Guidance.
- Work with land use jurisdictions to require abandonment of private wells when water service is provided by the District.

10.6 Chapter 6: Operations and Maintenance Program

The Operations and Maintenance program outlines the daily functions required to operate the water system smoothly and efficiently. The water system operation program elements range from employee training and safety considerations, through administrative requirements for records and reports, meeting water quality requirements, operating and managing the source, supply, storage, pumping stations and distribution system under normal and peak operating conditions, maintenance and emergency conditions, to responding to customer questions and complaints.

10.6.1 Implementation Considerations (Chapter 6)

Training and Management

- Manage the water system in a safe and professional manner, implementing the routine operation tasks and preventative maintenance activities.
  - Maintain a Green Operating Permit.
- Provide each field crew member with training opportunities so they can obtain the knowledge and experience necessary to maximize their potential to participate in the operation of the water system. Ensure that the water system continues to be under the control of certified operators.
  - Each District staff member that aspires to or has a water worker certification provide an annual request to their manager for the classes and training required to maintains or advance their certification.
  - Continue in-house training to ensure staff understands system dynamics, including emergency planning.
- Implement Reliability Centered Maintenance (RCM) to optimize maintenance schedules and maximize the life of water assets.
  - Within 2 years apply RCM to all facility types (e.g. wells, booster pumps) and distribution system appurtenances.
- Provide initial response within one hour to customer complaints received and logged during office hours and follow through with appropriate responses to complaints.
  - Annually review work order and service order history for logging of calls received and resolution of the situation for those including a field response.
  - Include a tracking process in any new Computerized Maintenance Management System (CMMS).
- Improve the efficiency of the District recordkeeping through development and implementation of a formal electronic storage and retrieval system.
  - This effort may continue use of the DOCUWARE system or other program that integrates between different enterprise systems.
  - Review the current organization of historic field crew records and coordinate a

process of transition and scanning District records for easy retrieval.

- Continue to identify and investigate additional smart utility platforms for implementation of the District's Enterprise Action Plan to develop a more efficient and robust District operation.

Water Quality Requirements

- Complete tasks necessary to meet regulatory requirements of the Safe Drinking Water Act for source water.
  - Retain the District's current compliance with the Surface Water Treatment Rule with a focus on maintaining a chlorine residual in the portion of the system receiving supply from the regional water system.
  - Continue to execute and monitor the District's Groundwater Rule Plan into the future by developing a map to visually track quarterly chlorine residual results and creating a long and short-term plan to maintain a stable free-chlorine residual in the District's system.
  - Complete new sanitary survey with the Department of Health when required.
  - Continue taking water samples for tests as required by the Synthetic Organic and Inorganic Chemicals Phases I, II and V Rules, and maintain waivers where possible.
  - Remain in compliance with the Arsenic Rule by continuing to monitor for arsenic at District sources on a quarterly basis, or as required by DOH, to demonstrate that treatment remains effective in reducing arsenic below the MCL. In cases where blending of multiple sources is needed to reduce the finished water arsenic to below the MCL, ensure that source operation includes the appropriate controls and interlocks to achieve the requisite blend ratios.
  - Remain in compliance with the Radionuclides Rule by monitoring District sources as required by DOH, and requesting waivers from additional monitoring when reasonable.
  - Remain in compliance with sampling and testing for UCMRs and maintain waivers where possible, including the addition of required sampling and testing required under UCMR4 in 2019.
  - Develop an in-house process to track monitoring requirements for the Source Water and Treatment regulatory requirements of the Safe Drinking Water Act.
- Continue added monitoring of Per- and Polyfluoroalkyl Substances (PFAS) concentrations in the Lower Issaquah Valley Aquifer, and update groundwater model calibration.
  - Evaluate cost-effectiveness of implementing treatment compared to regional water purchase to mitigate PFAS.
  - Conduct appropriate 2-way outreach with customers on issues of water quality, to keep customers informed, evaluate public sentiments and willingness to fund treatment improvements.
- Complete tasks necessary to meet regulatory requirements of the Safe Drinking Water Act for distribution systems.
  - Take the total coliform samples throughout the distribution system each month as required by the Total Coliform Rule (TCR) and Revised TCR/Distribution System Rule. Follow-up with repeat sampling and additional testing for any samples that

indicate total coliform and/or E. coli are present.
  - Remain in compliance with the Disinfection/Disinfection By-Products (DBP) Rules by continued sampling and testing per the Stage 2 DBP monitoring plan.
  - Collect samples once every three years from taps in homes as required for evaluation under the Lead and Copper Rule, current testing is for 30 homes. And comply with any changes to the Lead and Copper Rule, when issued.
  - Monitor potential requirements for lead and copper testing in schools and work with the school districts to communicate and share testing requirements and results.
- Supply an annual Consumer Confidence Report (CCR) to all District customers, per the CCR Rule, providing a report of the District's water quality and any violations. In addition, provide more immediate notification of any water quality violations that have the potential for serious adverse effect, per the Public Notification Rule.
  - Complete annual distribution of the CCR.
  - Increase distribution frequency of the CCR in accordance with the requirements contained in the American Water Infrastructure Act (AWIA) of 2018.
- Maintain compliance with operator certification requirements.
- Monitor the development of future rules and modifications
- Notify the Washington State Department of Health of any District failure to comply with primary water quality standards, monitoring requirements or a violation of a primary maximum contaminant level.

Emergency Response, Safety and Cross-Connection Control Programs

- Regularly update the Emergency Plan to incorporate changes to the District system and operations, and to better incorporate the Incident Command System (ICS) and the National Incident Management System (NIMS).
  - Hold monthly Emergency Response Committee meetings including a standing item for examining proposals and adding any improvements to the Emergency Response Plan.
- Respond to incidents with strategies based on priorities to 1) maintain life safety, 2) stabilize the incident to minimize the effect of the incident on surrounding areas while using resources efficiently, and 3) conserve property.
  - Prepare After Action Reports to review District responses to incidents.
- Train District staff in compliance with the NIMS.
  - Provide a minimum of ICS 100 and IS 700 to all District staff, ICS 200, ICS 300, ICS 400 and IS 800 to Managers and Superintendents and personnel identified for lead positions as part of a response based on the ICS structure under the NIMS framework.
- Prepare Risk & Resiliency Assessment by December 31, 2020 in accordance with AWIA of 2018.
- Update Emergency Plan by June 30, 2021 in accordance with AWIA of 2018.
- Complete the Continuity of Operations Plan by July 2021, in conjunction with the Emergency Response Plan update as required by the AWIA of 2018.
- Provide regular safety training to District staff.
  - Schedule periodic staff safety meetings and additional specialized safety training as necessary.

- Implement a Reliability Centered Maintenance approach to all safety equipment, including personal protective equipment, by 2021.
- Continue development, review and updates of the District's Accident Prevention Program Hazard Specific Safety Programs.
- Continue implementation of the District's Cross-Connection Control Program to all customer classes.
  - Add newly identified potential Cross Connection sites to the District's Cross-Connection Control database. Obtain annual certification of testing of all identified backflow prevention devices.
  - Implement new backflow prevention software program in 2019.
  - Actively monitor and respond appropriately on all AMI system backflow alerts.

10.7 Chapter 7: Distribution Facilities Design and Construction Standards

The design and construction standards are developed to make sure the system is constructed to endure and to maintain efficiency of system operation by requiring consistent material and equipment use per District standards.

10.7.1 Implementation Considerations (Chapter 7)

- Regularly review and update District design and construction standards to incorporate new technology and products to ensure the installation of high-quality, resilient and efficient facilities.
  - Hold at least four Design-Review Committee meetings each year.
- Require water system looping where reasonable and practical to provide redundancy in service during maintenance and repair activities, and better water quality overall by avoiding stagnation in dead-ends.

10.8 Chapter 8: Capital Plan

The Capital Plan (CP) is developed to address deficiencies identified during system analysis, to improve operational and maintenance efficiency, meet regulatory requirements and to provide for growth related requirements. The CP considers those projects projected for a 20-year implementation schedule, with primary focus on the 10-year planning horizon. Each project is identified with an estimated implementation schedule and funding source.

10.8.1 Implementation Considerations (Chapter 8)

- Continue refinement and use of the Asset Management program to help direct when capital replacement projects should occur, and to provide a basis for the reserve funding strategy.
- Further consider and implement supply projects including projects associated with individual well improvements, and a potential project for significant treatment addition in response to continued monitoring of water quality in the Lower Issaquah Valley Aquifer.

- Implement Storage Tank projects for seismic retrofit at the 7 MG Tank, and also at the 2 MG Tank as part of a project that will also address circulation and coating improvements. Implement a series of projects for coating projects at most tanks.
- Implement Booster Pump projects to address improvements for growth, but also to replace and improve the existing SE 43rd Booster Pump Station.
- Implement Water Distribution System projects including projects for
  - Fire flow improvements
  - Projects to improve redundancy of the District's system
  - New transmission mains for capacity
  - Extension projects to provide for additional services and to loop the water system. Note that the Sammamish Town Center will require substantial new water main facilities, and these extensions have been identified for installation by others, most likely through the Developer Extension Agreement process.
  - Projects required by other entities' improvements
  - Replacement of existing mains, over time
- Implement Water Maintenance and Operation projects including additional expansion of District Headquarters Site facilities, safety improvements, and addresses vehicles and equipment needs. The next update of the Water Comprehensive Plan is also included.

10.9 Chapter 9: Finance Plan

The financial plan reviews the revenues and expenses for the District's water system to verify that the operating and capital needs identified within this Plan and the District's budgets are attainable and affordable. The Financial Plan reflects the District's overall shift in focus from growth to maintenance, still requiring additional new capital investment but having a heavy component of repair and rehabilitation of existing facilities.

10.9.1 Implementation Considerations (Chapter 9)

Rates

- Fund capital reserves consistent with asset management plan
- Complete a comprehensive rate study in 2019/2020.
- Review the proposed capital improvement project schedule to balance project fund requirements and rate increases to result in level rate increases.
- Adopt annual budgets, conduct annual rate review, and adjust rates appropriately
- Align rate review, budget and Capital and Comprehensive Plans.

General Facility Charge

- Charge new customers their fair share of the facility costs needed to provide them service.
- Implement fair and equitable GFC rates to mitigate the burden on existing customers.
- Annually review the GFC rate to keep pace with construction cost increases.

Funding Capital Improvement Projects

- Evaluate issuing long term debt to fund future capital improvement projects designed

to minimize the cost of funds, ensure equity over time among ratepayers, and provide for a timely completion of capital facilities.

- Align debt with the proper funding source, to manage debt and minimize volatility in rate requirements.
- Allow borrowing between funds with Board approval – these loans will ensure that customer classes will not subsidize one another, and loan repayment will be structured to be repaid in a timely manner.
- Fund future capital extension of assets through the collection of water and sewer General Facility and Local Facility connections charges. These connections fees will be segregated into separate funds, and not comingled.
- Monitor opportunities to obtain external sources of funds.

This page intentionally left blank.

Appendix A

Water Facilities Inventory

This page intentionally left blank.

WATER FACILITIES INVENTORY (WFI) FORM

Washington State Department of Health
Division of Environmental Health
Office of Drinking Water

ONE FORM PER SYSTEM

Quarter: 1
Updated: 11/16/2018
Printed: 12/3/2018
WFI Printed For: On-Demand
Submission Reason: Pop/Connect Update

RETURN TO: Central Services - WFI, PO Box 47822, Olympia, WA, 98504-7822

1. SYSTEM ID NO.	2. SYSTEM NAME	3. COUNTY	4. GROUP	5. TYPE
40900 9	SAMMAMISH PLATEAU WATER & SEWER	KING	A	Comm

6. PRIMARY CONTACT NAME & MAILING ADDRESS	7. OWNER NAME & MAILING ADDRESS	8. OWNER NUMBER: 003007
SCOTT JONAS [OPERATIONS MGR.] 1510 228TH AVE SE SAMMAMISH, WA 98075	SAMMAMISH PLATEAU WATER&SEWER DIST. SCOTT JONAS 1510 228TH AVE SE SAMMAMISH, WA 98075	OPERATIONS MGR.
STREET ADDRESS IF DIFFERENT FROM ABOVE	**STREET ADDRESS IF DIFFERENT FROM ABOVE**	
ATTN	ATTN	
ADDRESS	ADDRESS	
CITY STATE ZIP	CITY STATE ZIP	

9. 24 HOUR PRIMARY CONTACT INFORMATION		10. OWNER CONTACT INFORMATION	
Primary Contact Daytime Phone:	(425) 392-4931 x207	Owner Daytime Phone:	(425) 392-4931 x207
Primary Contact Mobile/Cell Phone:	(425) 495-6528	Owner Mobile/Cell Phone:	(425) 495-6528
Primary Contact Evening Phone:	(xxx)-xxx-xxxx	Owner Evening Phone:	(xxx)-xxx-xxxx
Fax: (425) 391-5389	E-mail: xxxxxxxxxxxxxxxxxxxx	Fax: (425) 391-5389	E-mail: xxxxxxxxxxxxxxxxxxxx

11. SATELLITE MANAGEMENT AGENCY - SMA (check only one)

- [x] Not applicable (Skip to #12)
- [ ] Owned and Managed
- [ ] Managed Only
- [ ] Owned Only

SMA NAME: _____ SMA Number:

12. WATER SYSTEM CHARACTERISTICS (mark all that apply)

- [ ] Agricultural
- [x] Commercial / Business
- [x] Day Care
- [x] Food Service/Food Permit
- [ ] 1,000 or more person event for 2 or more days per year
- [x] Hospital/Clinic
- [x] Industrial
- [x] Licensed Residential Facility
- [x] Lodging
- [x] Recreational / RV Park
- [x] Residential
- [x] School
- [ ] Temporary Farm Worker
- [x] Other (church, fire station, etc.): _____

13. WATER SYSTEM OWNERSHIP (mark only one)

- [ ] Association
- [ ] City / Town
- [ ] County
- [ ] Federal
- [ ] Investor
- [ ] Private
- [x] Special District
- [ ] State

14. STORAGE CAPACITY (gallons)

22,900,000

- SEE NEXT PAGE FOR A COMPLETE LIST OF SOURCES -

WATER FACILITIES INVENTORY (WFI) FORM - Continued

1. SYSTEM ID NO.	2. SYSTEM NAME	3. COUNTY	4. GROUP	5. TYPE
40900 9	SAMMAMISH PLATEAU WATER & SEWER	KING	A	Comm

15	16 SOURCE NAME	17 INTERTIE	18 SOURCE CATEGORY										19 USE			20	21 TREATMENT						22 DEPTH	23	24 SOURCE LOCATION			
Source Number	LIST UTILITY'S NAME FOR SOURCE AND WELL TAG ID NUMBER. Example: WELL #1 XYZ456 IF SOURCE IS PURCHASED OR INTERTIED, LIST SELLER'S NAME Example: SEATTLE	INTERTIE SYSTEM ID NUMBER	WELL	WELL FIELD	WELL IN A WELL FIELD	SPRING	SPRING FIELD	SPRING IN SPRINGFIELD	SEA WATER	SURFACE WATER	RANNEY / INF. GALLERY	OTHER	PERMANENT	SEASONAL	EMERGENCY	SOURCE METERED	NONE	CHLORINATION	FILTRATION	FLUORIDATION	IRRADIATION (UV)	OTHER	DEPTH TO FIRST OPEN INTERVAL IN FEET	CAPACITY (GALLONS PER MINUTE)	1/4, 1/4 SECTION	SECTION NUMBER	TOWNSHIP	RANGE
S01	Well 1R		X										X			Y		X		X			128	500	SW NE	10	24N	06E
S02	Well 2.1				X								X			Y		X	X	X			96	500	NW SE	11	24N	06E
S03	InAct 08/06/2004 Well # 5		X												X	N		X					716	0	NW SW	34	25N	06E
S04	InAct 01/27/2009 Well #4		X												X	Y	X						714	750	SW NW	34	25N	06E
S05	InAct 08/06/2004 Well #6		X												X	N	X						366	0	NE SE	32	25N	06E
S06	Well #7		X										X			Y		X		X			83	2100	NE NE	28	24N	06E
S07	Well #8		X										X			Y		X		X			105	3500	NE NE	28	24N	06E
S08	InAct 09/27/2004 Well #12		X												X	N		X					100	0	NW SW	13	25N	07E
S09	InAct 03/20/2007 Well #13		X										X			Y		X	X	X			865	170	SW NW	12	25N	06E
S10	InAct 07/14/2015 Well #14		X											X		Y	X						305	62.5	NE NW	24	25N	06E
S11	Well #10		X										X			Y		X		X			135	500	NE SW	11	24N	06E
S12	Well #11.2		X										X			Y		X	X	X			785	2000	NE NW	34	25N	06E
S13	Well #9		X											X		Y		X		X			222	2300	SW NW	27	24N	06E
S14	Well 11.1		X										X			Y		X	X	X			409	500	NE NW	34	25N	06E
S15	Well 2.2 (2R) AAD383				X								X			Y		X	X	X			150	500	NW SE	11	24N	06E
S16	Well 12R AEC911		X										X			Y		X	X	X			138	200	NW SW	13	25N	06E
S17	Well 4R AAS270		X										X			Y		X	X	X			657	1800	NW SW	34	25N	06E
S18	Wells 2.1 & 2.2			X									X			Y		X	X	X			96	500	NW SE	11	24N	06E
S19	AA374C/Cascade Water Alliance (2)	AA374 C											X			Y	X							0			00N	00E
S20	75265X/NE Sammamish (4)	75265 X											X			N	X							0			00N	00E
S21	363505/Issaquah (2)	36350 5													X	N	X							0			00N	00E
S22	902603/Union Hill CVZ (2)	90260 3													X	N	X							0			00N	00E
S23	02055/Ames Lake CVZ (1)	02055 0													X	N	X							0			00N	00E
S24	Well # 13R AAS174		X										X			Y		X	X	X			795	200	SW NW	12	25N	06E

WATER FACILITIES INVENTORY (WFI) FORM - Continued

1. SYSTEM ID NO.	2. SYSTEM NAME	3. COUNTY	4. GROUP	5. TYPE
40900 9	SAMMAMISH PLATEAU WATER & SEWER	KING	A	Comm

	ACTIVE SERVICE CONNECTIONS	DOH USE ONLY! CALCULATED ACTIVE CONNECTIONS	DOH USE ONLY! APPROVED CONNECTIONS
25. SINGLE FAMILY RESIDENCES (How many of the following do you have?)		21661	Unspecified
A. Full Time Single Family Residences (Occupied 180 days or more per year)	15902		
B. Part Time Single Family Residences (Occupied less than 180 days per year)	0		
26. MULTI-FAMILY RESIDENTIAL BUILDINGS (How many of the following do you have?)			
A. Apartment Buildings, condos, duplexes, barracks, dorms	1051		
B. Full Time Residential Units in the Apartments, Condos, Duplexes, Dorms that are occupied more than 180 days/year	5759		
C. Part Time Residential Units in the Apartments, Condos, Duplexes, Dorms that are occupied less than 180 days/year	0		
27. NON-RESIDENTIAL CONNECTIONS (How many of the following do you have?)			
A. Recreational Services and/or Transient Accommodations (Campsites, RV sites, hotel/motel/overnight units)	0	0	
B. Institutional, Commercial/Business, School, Day Care, Industrial Services, etc.	845	845	
28. TOTAL SERVICE CONNECTIONS		22506	

29. FULL-TIME RESIDENTIAL POPULATION

A. How many residents are served by this system 180 or more days per year? 54468

30. PART-TIME RESIDENTIAL POPULATION	JAN	FEB	MAR	APR	MAY	JUN	JUL	AUG	SEP	OCT	NOV	DEC
A. How many part-time residents are present each month?												
B. How many days per month are they present?												

31. TEMPORARY & TRANSIENT USERS	JAN	FEB	MAR	APR	MAY	JUN	JUL	AUG	SEP	OCT	NOV	DEC
A. How many total visitors, attendees, travelers, campers, patients or customers have access to the water system each month?												
B. How many days per month is water accessible to the public?												

32. REGULAR NON-RESIDENTIAL USERS	JAN	FEB	MAR	APR	MAY	JUN	JUL	AUG	SEP	OCT	NOV	DEC
A. If you have schools, daycares, or businesses connected to your water system, how many students daycare children and/or employees are present each month?												
B. How many days per month are they present?												

33. ROUTINE COLIFORM SCHEDULE	JAN	FEB	MAR	APR	MAY	JUN	JUL	AUG	SEP	OCT	NOV	DEC
* Requirement is exception from WAC 246-290	60	60	60	60	60	60	60	60	60	60	60	60

34. NITRATE SCHEDULE	QUARTERLY	ANNUALLY	ONCE EVERY 3 YEARS
(One Sample per source by time period)			

35. Reason for Submitting WFI:

☐ Update - Change ☐ Update - No Change ☐ Inactivate ☐ Re-Activate ☐ Name Change ☐ New System ☐ Other _____

36. I certify that the information stated on this WFI form is correct to the best of my knowledge.

SIGNATURE: _____ **DATE:** _____

PRINT NAME: _____ **TITLE:** _____

This page intentionally left blank.

Appendix B

History of Moratoriums and Allocations, and Group B Water Systems in Future RWSA

This page intentionally left blank.

Table B-1
History of District Moratoriums and
Allocations on Certificates of Water Availability

Resolution Number	Date	Description
A-999	3/13/1989	Imposed moratorium on issuance of Certificates of Water Availability which allow the creation of new tax lots, or use of existing tax lots in excess of 1 Equivalent Residential Unit (ERU).
1027	6/5/1989	Public school districts exempted from the moratorium.
1156	3/5/1990	Certain private schools are exempted from the moratorium.
1253	10/15/1990	Moratorium implemented by A-999, 1027, and 1156 is rescinded.
1345	5/6/1991	Imposed 90-day moratorium on issuance of Certificates of Water Availability which allow the creation of new tax lots, or use of existing tax lots in excess of 1 ERU, based on Ecology's rescission of temporary test pumping permit for Well 9. The rescission was due to a leaking underground storage tank in the City of Issaquah.
1372	7/11/1991	Imposed moratorium on issuance of Certificates of Water Availability which allow the creation of new tax lots, or use of existing tax lots in excess of 1 ERU, based on information from Ecology concerning applications for increased and new water appropriations. Exemptions to the moratorium include Certificates for Lot Line Adjustments, tax lots where general facility charges have been prepaid, second dwellings on existing tax lots granted for medical and/or other hardship reasons, and for public tax-supported agencies.
1387	9/9/1991	Real property with existing, previously certificated master site plans are exempted from the moratorium to complete such master site plans, and a policy to either cancel Certificates and/or revise Certificates for lower water use rates on the same property upon request is established.
1521	11/16/1992	Churches are exempted from the moratorium.
1565	5/17/1993	Certain preschools and private schools are exempted form the moratorium.
1741	12/12/1994	Moratorium implemented by A-999, 1027 and 1156 is rescinded.
2236	1/5/1998	Imposed temporary moratorium on issuance of Certificates of Water Availability. Moratorium to last 4 months, until May 4, 1998. Also directs District staff to analyze pending projects and other water sources.

Resolution Number	Date	Description
2241	1/20/1998	Exempts public tax-supported agencies from the moratorium.
NA	2/23/1998	Public hearing held on temporary moratorium and ideas for allocating resource.
2257	2/23/1998	Excludes Cascade View Zone from moratorium on basis of separate supply system.
2258	3/2/1998	Exempts Certificates for 1 ERU/tax lot, existing as of 01/05/98 from moratorium, where the tax lots do not currently receive water service from the District.
2286	5/4/1998	Extends the temporary moratorium to an indeterminate date.
	5/27/1998	Public hearing held on methods and policies for allocating resource.
2298	6/2/1998	Temporary moratorium terminated and Allocation policies and procedures established for issuing Certificates of Water Availability.
		Resolution Nos. 2236, 2241, 2257, and 2286 rescinded. Resolution 2258 will be rescinded as of 4:30 on 6/11/98. After that time Certificates for 1 ERU/tax lot will be subject to the allocation. Reservation of 300 ERUs established for public agencies and emergencies.
		Certificates of Water Availability opportunities issued through periodic Allocations to be held approximately every 4 months.
		Application requirements established. Policies and Procedures for Allocations and Successful Applicants set. Policies and Procedures for Certificates of Availability for Successful Applicants and Waiting list with Unsuccessful Applicants set.
		Initial Allocation to be held June 15, 1998, with applications due by 4:30 on June 11, 1998. Second Allocation to be held October 12, 1998, with applications due by October 8, 1998. Certificates of Water Availability allowed for: a. Previously allocated uses. b. Public tax-supported agencies. c. Use within the Cascade View Zone.
2696	2/12/2001	Apply one-half of ERUs available for allocation to Reserve Account established for public agencies and emergencies if Reserve Account falls below 200 ERUs.
3188	5/17/2004	Reduce the Reserve Account to 150 ERUs
3228	11/5/2004	Reduce the Reserve Account to 25 ERUs
3266	12/20/2004	Release of Allocation effective January 1, 2005

NA = Not applicable

Table B-2
Group B Water Systems in Future Retail Water Service Area

EQUIS ID	WRIA	Location Name	Basin Name	PIN	Location Number	Quarter Section
GrpB_00521_01	8	Bryan Water Co.	Issaquah Creek	1424069032	24N/06E-14J	NE/SE
GrpB_00732_01	8	Dillon/Mc Laughlin	Issaquah Creek	1424069042	24N/06E-14	SE/NE
GrpB_00885_01	7	Aldarra Farms	Patterson Creek	724079003	24N/06E-12	SE/NE
GrpB_01839_01	8	Alpine West	Evans Creek	2725069113	25N/06E-27	SE/SE
GrpB_02406_01	7	Stockholm, J.	Patterson Creek	1824079083	24N/07E-18	SW/NE
GrpB_02880_01	7	Donohoe, M. Water	Patterson Creek	1824079090	24N/07E-18C	NE/NW
GrpB_04162_01	7	Hamar Ii	Patterson Creek	2325069023	25N/06E-23	NW/SE
GrpB_04942_01	7	Thompson, Dudley	Patterson Creek	2325069043	25N/06E-23L	NE/SW
GrpB_05010_01	8	Brown, Dennis Water System	East Lake Sammamish	824069023	24N/06E-08J	NE/SE
GrpB_05269_01	8	Hansen, Lamar	Issaquah Creek	2124069103	24N/06E-21	NW/SE
GrpB_05936_01	7	Mason-Hayward	Patterson Creek	1824079001	24N/07E-18A	NE/NE
GrpB_06002_01	8	Allodi	East Lake	924069010	24N/06E-09	NW/SW
GrpB_06607_01	8	Anderson, Bob	Issaquah Creek	1424069057	24N/06E-14	SE/SW
GrpB_07531_01	7	Ridgeview	Ames Lake	225069016	25N/06E-02	SE/SE
GrpB_08282_01	7	Vasilview Water System	Patterson Creek		24N/07E-07	SE/NE
GrpB_08813_01	7	Brown, Randy	Patterson Creek	2425069069	25N/06E-24L	NE/SW
GrpB_10686_01	8	Steele, Anna	Issaquah Creek	2124069043	24N/06E-21	NW/SE
GrpB_11012_01	7	Canyon Creek	Patterson Creek	1224069068	24N/06E-12	SE/SE
GrpB_12244_01	8	Chaussee, Russell	Issaquah Creek	2224069086	24N/06E-22	NW/SE
GrpB_12251_01	8	Irons	Issaquah Creek	1224069059	24N/06E-12	NW/SW
GrpB_13650_01	7	Cleveland Memorial Forest	Patterson Creek	724079012	24N/07E-07	SE/SW
GrpB_15377_01	8	Imel	Evans Creek	1125069019	25N/06E-11C	NE/NW
GrpB_15470_01	7	Counan C Water	Patterson Creek		24N/06E-12	NW/SE
GrpB_15509_01	8	Mcbride	East Lake Sammamish	2224069122	24N/06E-22C	NE/NW
GrpB_16602_01	7	Beckenbaugh, L.	Patterson Creek	1224069050	24N/06E-12B	NW/NE
GrpB_17576_01	7	Strugar, Robert	Patterson Creek	1224069061	24N/06E-12	SW/NE
GrpB_18025_01	8	Macdonald, Gregg	Issaquah Creek	2124069121	24N/06E-21A	NE/NE
GrpB_18395_01	7	Deep Rock	Patterson Creek	2525069062	25N/06E-25D	NW/NW
GrpB_18892_01	8	Barry Kirk	East Lake Sammamish	2725069109	25N/06E-27J	NE/SE
GrpB_22031_01	8	Childs	Evans Creek	2625069058	25N/06E-26	SW/NW
GrpB_22570_01	7	Edwards, S.	Patterson Creek	3025079053	25N/07E-30	SE/SW
GrpB_23351_01	8	Caldwell Community	Issaquah Creek	1424069083	24N/06E-14	NW/SE
GrpB_26261_01	8	Scottsdale	Evans Creek	2225069065	25N/06E-22J	NE/SE
GrpB_28651_01	7	Fern Ridge Estates Waterworks	Patterson Creek	1224069012	24N/06E-12	SW/SW
GrpB_30361_01	8	H & M Homes	Evans Creek	2225069035	25N/06E-22	SE/SE
GrpB_31741_01	8	Resident	East Lake Sammamish	924069136	24N/06E-09J	NE/SE
GrpB_32260_01	8	Heggen	East Lake Sammamish	524069073	24N/06E-05	SW/NW
GrpB_33899_01	7	Holtzner, B.	Patterson Creek	1224069048	24N/06E-12B	NW/NE
GrpB_37015_01	8	Jorgensen, D.	East Lake Sammamish	2725069115	25N/06E-27	SE/SW
GrpB_45280_01	8	Lakeside Gravel Co	Issaquah Creek		24N/06E-27D	NW/NW

EQUIS ID	WRIA	Location Name	Basin Name	PIN	Location Number	Quarter Section
GrpB_45560_01	8	Lakey, B.	East Lake Sammamish	624069003	24N/06E-06J	NE/SE
GrpB_46746_01	8	A & G Well Water Assoc.	Evans Creek	2625069009	25N/06E-26L	NE/SW
GrpB_47381_01	7	Grey Ghost Land Trust	Patterson Creek	1224069075	24N/06E-12B	NW/NE
GrpB_49940_01	8	Mcintosh	East Lake Sammamish	224069108	24N/06E-02	SW/NW
GrpB_53368_01	7	Woulf	Patterson Creek	3125079033	25N/07E-31D	NW/NW
GrpB_55402_01	8	Mittlestaedt, L.W.	East Lake Sammamish	1724069088	24N/06E-17	SE/NE
GrpB_61951_01	8	Triple A - Issaquah Community	Issaquah Creek	2124069112	24N/06E-21B	NW/NE
GrpB_64714_01	8	Clark, Bethel	Issaquah Creek	1424069078	24N/06E-14	NW/SE
GrpB_75210_01	8	Saddleback	East Lake Sammamish	2725069020	25N/06E-27	SW/SE
GrpB_84655_01	8	Pigort-Thompson	East Lake Sammamish	924069209	24N/06E-09	SW/SW
GrpB_98550_01	7	Work, J.E.	Patterson Creek	2325069087	25N/06E-23	SW/SW
GrpB_AA430_01	8	Corra Water System	East Lake Sammamish		24N/06E-05L	NE/SW
GrpB_unk05_01	8	J & S	East Lake Sammamish	324069055	24N/06E-03	SE/SW
GrpB_unk07_01	8	Brekke, Lyle	Issaquah Creek	2124069087	24N/06E-21	SW/SE
GrpB_89870_01	8	Twin Cedars	Lake Sammamish		24N/06E-08	SW/SW
GrpB_02419_01	8	Waverly Shores	East Lake Sammamish	824069165	24N/06E-08	NW/SW
GrpB_15471_01	8	Leland & Fine	East Lake Sammamish	624069068	24N/06E-06	NE/NE
GrpB_86750_01	8	Syringia Springs	East Lake Sammamish	2925069013	25N/06E-29	SE/NW
GrpB_25201_01	8	Bradford Place	Evans Creek	2225069081	25N/06E-22	SE/SE
GrpB_22314_01	7	Hill Tops	Patterson Creek	1125069119	25N/06E-11	NW/SW

Appendix C

Well Data Sheets, 2008-2016 Water Production

This page intentionally left blank.

WELL NO. 1R DATA SHEET

LOCATION:
Street Address: 24100 SE 28th ST
Description: T24N/R6E/Section 10, NW4/SE4/NE4
Elevation: 473.12 ft.
*Well 1R was drilled in 1984 as a replacement for Well 1, which was drilled in 1954 for King County Water District 121.

WELL CONSTRUCTION:
Date Drilled: 1984
Drilling Contractor: Armstrong
Drilling Method: Cable Tool
Completion Casing Diameter, Depth: 12-in., 137 ft.
Screen Diameter, Interval: 12-in. tel., 137-147 ft.

WELL PUMPING TEST(S)

Date	Yield (gpm)	SWL (ft)	Specific Capacity (gpm/ft-dd)
3/14/84	600	120.0	50

INSTALLED EQUIPMENT:
Pump
Installation Date: 1984
Type: Vertical Turbine – 9 stages
Manufacture: Peerless
Impeller Number: 2625033
Flow: 650 gpm
Total Dynamic Head: 420 ft.

Motor
Manufacturer: US motors (Emerson)
Model Number: BF61A
Horsepower: 750 (NEMA Code F)
ID#: N02-BF61A-M
Catalog # H075V25LG
Serial #: NO2-BF61A-M

WATER RIGHTS
Certificate Number: G1-00342
Instantaneous: 300 gpm
Continuous: 448 ac-ft/yr,146 MGY

Certificate Number: G1-25438A
Instantaneous: 200 gpm
Continuous: 448 ac-ft/yr,146 MGY (Supplemental)

WELL NO. 2.1 DATA SHEET

LOCATION:

Street Address: 3125 E Beaver Lake Dr SE
Description: T24N/R6E, Section 11, SE4/NW4/NE4
Elevation: 417.0 ft.

WELL CONSTRUCTION:

Date Drilled: 1968
Drilling Contractor: Harold Meyer
Drilling Method: Cable Tool
Completion Casing Diameter, Depth: 12-in., 96 ft.
Screen Diameter, Interval: 12-in., TS, 96-116 ft. (Perforated)

WELL PUMPING TEST(S)

Date	Yield (gpm)	SWL (ft)	Specific Capacity (gpm/ft-dd)
1968	500	62	13.9
1983	330	59	15.3

INSTALLED EQUIPMENT:

Pump

Installation Date: 1968
Type: Vertical Turbine
Manufacture: Peerless
Impeller Number: T84363 (9 Stages)
Flow: 500 gpm (original)
Total Dynamic Head: 320 ft.

Motor

Manufacturer: GE General Electric
Model Number: BF50A 5K6248XH1A
I.D. #: P057358554-0045
Catalog # H050V2BLG-C
Horsepower: 50 (NEMA Code B)

WATER RIGHTS

Well Nos. 2.1 + 2.2 are a wellfield and share water rights
Certificate Number: 6802-A / G1*09533C
Instantaneous: 500 gpm
Continuous: 800 ac-ft/yr, 259 MG/Yr

Certificate Number: G1-00749P
Instantaneous: 20 gpm
Continuous: 10.5 ac-ft/yr, 6.5 MG/Yr

WELL NO. 2.2 DATA SHEET

LOCATION:
Street Address: 3125 E Beaver Lake Dr SE
Description: T24N/R6E, Section 11, SE4/NW4/NE4
Elevation: 419 ft.

WELL CONSTRUCTION:
Date Drilled: May 9, 1993
Drilling Contractor: Holt Drilling, Inc.
Drilling Method: Cable Tool
Completion Casing Diameter, Depth: 16-in., 180 ft.
Screen Diameter, Interval: 16-in. TS, 150-175 ft.

WELL PUMPING TEST(S)

Date	Yield (gpm)	Initial WL (ft)	Specific Capacity (gpm/ft-dd)
5/10/96	188 (3.5 hrs)	63.72	13.2
5/21/09	500 (24 hrs)	64.13	11.21

INSTALLED EQUIPMENT:
Pump
Installation Date: 3/9/2009
Type: Vertical Turbine
Manufacture: Peerless
Impeller Number: Model # 8x8x16.5 Serial # 558148
Flow: 500 gpm
Total Dynamic Head:

Motor
Manufacturer: US Electric Motors
ID #: E04 0004422-100R
Horsepower: 60

WATER RIGHTS
Well Nos. 2.1 + 2.2 are a wellfield and share water rights
Certificate Number: G1-09533C
Instantaneous: 500 gpm
Continuous: 800 ac-ft/yr, 259 MG/Yr

Certificate Number: G1-00749P
Instantaneous: 20 gpm
Continuous: 10.5 ac-ft/yr, 6.5 MG/Yr

WELL NO. 4R DATA SHEET

LOCATION:

Street Address: 23050 Main St.
Description: T25N/R6E, Section 34, SW4/NW4/NE4
Elevation: 350ft.

WELL CONSTRUCTION:

Date Drilled: 2004
Drilling Contractor: Schneider Drilling Co., Inc
Drilling Method: Rotary – Direct & Reverse Circulation
Completion Casing Diameter, Depth: 20-in., 695 ft.
Screen Diameter, Interval: 12-in. PS, 710 - 845 ft.

WELL PUMPING TEST(S)

Date	Yield (gpm)	SWL (ft)	Specific Capacity (gpm/ft-dd)
1970	800	175	
1983	575	188	8.1
2004	2000	223.6	25.3

INSTALLED EQUIPMENT:

Pump Installation Date: 2009
Type: Inline shaft, vertical turbine, 10 stage
Model: 14LD
Manufacture: Peerless
RPM: 1750
Serial #: 716515
HP: 450
Impeller Number: 10 stage
Flow: 1800 gpm to 550 zone (1500 gpm to the 700 zone)
Total Dynamic Head: 810

Motor
Manufacturer: US Emerson Motor Company
Model Number: LO720074173-100R-01
Horsepower: 450

WATER RIGHTS

Certificate Number: G1*10373C / 7147
Instantaneous: 200 gpm
Continuous: 224 ac-ft/yr, 73 MG/Yr

Certificate Number: G1-23022C
Instantaneous: 550 gpm
Continuous: 880 ac-ft/yr, 287 MG/Yr (Supplemental)

Certificate Number: CG1-*07653C / 6395-A
Instantaneous: 100 gpm (Supplemental)
Continuous: 160 ac-ft/yr, 52.1 MG/Yr (Supplemental)

Certificate Number: G1-23897C
Instantaneous: 600 gpm (Supplemental)
Continuous: 768 ac-ft/yr, 250.2 MG/Yr (Supplemental)

WELL NO. 7 DATA SHEET

LOCATION:
Description: T24N/R6E, Section 28, NE4/NE4
Elevation: 70 ft.

WELL CONSTRUCTION:
Date Drilled: 3/18/84
Drilling Contractor: Hokkaido Drilling (Story)
Drilling Method: Cable Tool
Completion Casing Diameter, Depth: 16-in., 82.6 ft.
Screen Diameter, Interval: 14-in. PS, 82.6-103 ft., 103-123.6., 136.7-146.9 ft.

WELL PUMPING TEST(S)

Date	Yield (gpm)	SWL (ft)	Specific Capacity (gpm/ft-dd)
3/17/84	1952	6.17	51.5

INSTALLED EQUIPMENT:
Pump
Installation Date: 1984
Type: Turbine 6 stages
Manufacture: Peerless
Impeller Number: V4399C
Flow: 2100 gpm
Total Dynamic Head: 340 ft.

Motor
Manufacturer: General Electric
Model Number: 5K6286XH74A
Serial #: HNJ817110
Horsepower: 250

WATER RIGHTS *
Certificate Number: G1-00289C
Instantaneous: 3200 gpm
Continuous: 936 ac-ft/yr, 305 MG/Yr

Certificate Number: G1-25428A
Instantaneous: 2300 gpm
Continuous: 1173 ac-ft/yr, 382 MG/Yr (seasonal Nov 1- Apr 30)
Continuous: 565 ac-ft/yr, 184 MG/Yr for Recharge (seasonal Nov 1- Apr 30)

*Water rights for Wells 7&8 are combined.

WELL NO. 8 DATA SHEET

LOCATION:
Description: T24N/R6E, Section 28, NW4/SW4
Elevation: 73 ft.

WELL CONSTRUCTION:
Date Drilled: 8/29/84
Drilling Contractor: Hokkaido Drilling (Story)
Drilling Method: Cable Tool
Completion Casing Diameter, Depth: 16-in., 105 ft.
Screen Diameter, Interval: 14-in. PS, 105-120 ft., 125-135 ft., 145-165 ft., 170-179 ft.

WELL PUMPING TEST(S)

Date	Yield (gpm)	SWL (ft)	Specific Capacity (gpm/ft-dd)
9/12/84	1977	12.6	89.9
6/06/87	2400	13.17	89.6

INSTALLED EQUIPMENT:
Pump
Installation Date: 1989
Type: Vertical Turbine 7 stages
Manufacture: Peerless
Impeller Number: 2621959
Flow: 3500 gpm
Total Dynamic Head: 350 ft.

Motor
Manufacturer: U.S. MOTOR Titan
Model Number: VHS-WPI Type HU
ID#: S10S1370258R-1
Horsepower: 500

WATER RIGHTS*
Certificate Number: G1-00289C
Instantaneous: 3200 gpm
Continuous: 936 ac-ft/yr, 305 MG/yr

Certificate Number: G1-25428A
Instantaneous: 2300 gpm
Continuous: 1173 ac-ft/yr, 382 MG/Yr (seasonal Nov 1- Apr 30)
Continuous: 565 ac-ft/yr, 184 MG/Yr for Recharge (seasonal Nov 1- Apr 30)

*Water rights for Wells 7&8 are combined.

WELL NO. 9 DATA SHEET

LOCATION:

Description: T25N/R6E, Section 27, SW4/NW4

Elevation: 75.5 feet

WELL CONSTRUCTION:

Date Drilled: 7/15/91

Drilling Contractor: Hokkaido Well Drilling

Drilling Method: Cable Tool

Completion Casing Diameter, Depth: 24-in., 194 ft.

Screen Diameter, Interval: 24-in. TS, 194-219 ft.

WELL PUMPING TEST(S)

Date	Yield (gpm)	Initial WL (ft)	Specific Capacity (gpm/ft-dd)
7/12/92	2340 (9.5 days)	19.5	104
4/2/96	2310 (21 days)	15.95	102

INSTALLED EQUIPMENT:

Pump

Installation Date:

S.O 2427526 Service 6-14 HXR

Type: Vertical Turbine

Manufacture: Peerless (8/27/84)

Model: 10x10x20

Serial #: F24240

RPM: 1770

GPM: 2000

TDH Ft 340

BHP 206.9

Impeller Number:

Flow: 2300 gpm

Total Dynamic Head: 300

Motor

Manufacturer: GE General Electric

Model Number: 5K-S449DP60061

Horsepower: 300

RPM: 1790

WELL NO. 9 DATA SHEET (cont.)

WATER RIGHTS

Certificate Number:	G1-26014P
Instantaneous:	2000 gpm (seasonal Nov 1- Apr 30) (Supplemental)
Continuous:	1608 ac-ft/yr,523 MG/yr (Supplemental)
Certificate Number:	G1-00289C – (Temporary Supplemental to 10/31/2020)
Instantaneous:	3200 gpm
Continuous:	936 ac-ft/yr, 305 MG/yr
Certificate Number:	G1-25428A – (Temporary Supplemental to 10/31/2020)
Instantaneous:	2300 gpm
Continuous:	1173 ac-ft/yr, 382 MG/Yr (seasonal Nov 1- Apr 30)
Continuous:	565 ac-ft/yr, 184 MG/Yr for Recharge (seasonal Nov 1- Apr 30)

WELL NO. 10 DATA SHEET

LOCATION:
Description: T24N/R6E, Section 11, NE4/SW4
Elevation: 423.8 feet

WELL CONSTRUCTION:
Date Drilled: 8/26/93
Drilling Contractor: Armstrong Drilling, Inc.
Drilling Method: Cable Tool
Completion Casing Diameter, Depth: 12-in., 135 ft.
Screen Diameter, Interval: 10-in. PS, 135-155 ft., 173-183 ft.

WELL PUMPING TEST(S)

Date	Yield (gpm)	Initial WL (ft)	Specific Capacity (gpm/ft-dd)
8/24/93	508 (24 hrs)	69.73	13.2

INSTALLED EQUIPMENT:

Pump
Installation Date: 5/95
Type: Vertical Turbine
Manufacture: Peerless (5/10 of 95')
Serial #: 115011 Service 95TG IOMA
Model # 8x8x16.5
Impeller Number:
Flow: 700 gpm
Total Dynamic Head: 370 ft

Motor
Manufacturer: U.S. Electric Premium Efficiency High Thrust Motor
Model Number: J-143A50Y05Y011R133M
Horsepower: 75 PH: 3 RPM: 1770 HZ: 60
Volts: 460
Amps: 86.5

WATER RIGHTS
Certificate Number: G1-27166
Instantaneous: 500 gpm
Continuous: 378.5 ac-ft/yr, 123 MG/Yr
186.5 ac-ft/yr, 61 MG/Yr (Supplemental)

Certificate Number: G1-06228C / 5140
Instantaneous: 100 gpm
Continuous: 22.5 ac-ft/yr, 7.3 MG/Yr

WELL NO. 11.1 DATA SHEET

LOCATION:

Description: T25N/R6E, Section 34, NE4/NW4
Elevation: 358.11 feet

WELL CONSTRUCTION:

Date Drilled: 8/9/93
Drilling Contractor: Holt Drilling, Inc.
Drilling Method: Cable Tool
Completion Casing Diameter, Depth: 10-in., 409 ft.
Screen Diameter, Interval: 6-in. PS, 409-419 ft., 426-431 ft., 461-486 ft.

WELL PUMPING TEST(S)

Date	Yield (gpm)	Initial WL (ft)	Specific Capacity (gpm/ft-dd)
8/8/95	389	223.48	4.5

INSTALLED EQUIPMENT:

Pump

Installation Date: 5/20/99
Type: Vertical Turbine – 19 stages
Manufacture: Peerless
Impeller Number: T 84323
Model # 8x8x16.5
Flow: 500 gpm
Total Dynamic Head: 670 ft.

Motor

Manufacturer: U.S. Electric Premium Efficiency High Thrust Motor
Model Number: R-B410-00-778 R322 1655
Horsepower: 100

* Pump and motor originally installed at Well 5

WELL NO. 11.1 DATA SHEET (cont.)

WATER RIGHTS

Certificate Number:	G1-26573 denied
Instantaneous:	0 gpm
Continuous:	0 ac-ft/yr, 0 MG/Yr
Certificate Number:	G1-*07653C / 6395-A
Instantaneous:	100 gpm
Continuous:	160 ac-ft/yr, 52.1 MG/Yr
Certificate Number:	G1-23897C
Instantaneous:	300 gpm
Continuous:	468 ac-ft/yr, 152.5 MG/Yr
Instantaneous:	300 gpm (Supplemental)
Continuous:	300 ac-ft/yr, 97.75 MG/Yr (Supplemental)

WELL NO. 11.2 DATA SHEET

LOCATION:

Description: T25N/R6E, Section 34, NE4/NW4

Elevation: 358.01 feet

WELL CONSTRUCTION:

Date Drilled: 8/6/93

Drilling Contractor: Holt Drilling, Inc., Schneider Drilling Co., Inc.

Drilling Method: Cable Tool, Fluid Rotary

Completion Casing Diameter, Depth: 16-in., 785 ft.

Screen Diameter, Interval: 8-in., 785-821 ft., 839-880 ft.

WELL PUMPING TEST(S)

Date	Yield (gpm)	Initial WL (ft)	Specific Capacity (gpm/ft-dd)
8/29/95	973	232.85	19

INSTALLED EQUIPMENT:

Pump

Installation Date: 6/30/09

Type: Submersible 11 stage

Manufacture: Flowserve

Impeller Number: 12 MQH

Flow: 1200 gpm

Total Dynamic Head: 750 ft.

Motor

Manufacturer: 4-Pole Mercury Seal Byron Jackson

Model Number: 81904132

Serial #: 14T-1036-4-1

Horsepower: 300

WELL NO. 11.2 DATA SHEET (cont.)

WATER RIGHTS	
Certificate Number:	G1-26572
Instantaneous:	500 gpm;
Continuous:	565 acre-ft, 184MG/Yr
Certificate Number:	G1-26572@0, @1, @2, @3, @4, @5, @6
Instantaneous:	66 gpm;
Continuous:	2.55 acre-ft, 0.83 MG/Yr
Certificate Number:	G1-26572@7
Instantaneous:	3.5 gpm;
Continuous:	0.3 acre-ft, 0.10 MG/Yr
Certificate Number:	G1-26572@8
Instantaneous:	10.5 gpm;
Continuous:	0.6 acre-ft, 0.20 MG/Yr
Certificate Number:	G1-22861C
Instantaneous:	1000 gpm;
Continuous:	1600 acre-ft, 521.3 MG/Yr
Certificate Number:	G1-23897C
Instantaneous:	300 gpm;
Continuous:	300 acre-ft, 97.75 MG/Yr
Instantaneous:	300 gpm; (Supplemental)
Continuous:	468 acre-ft, 152.5 MG/Yr (Supplemental)

WELL NO. 12R DATA SHEET

LOCATION:

Street Address:	26410 NE 50th Street
Description:	T25N/R6E, Section 13, SE4/NW4
Elevation:	645 feet

WELL CONSTRUCTION:

Date Drilled:	December 9, 1999
Drilling Contractor:	Charon Drilling Co.
Drilling Method:	Cable Tool
Completion Casing	Diameter, Depth: 12-in., 135 ft.
Screen Diameter, Interval:	12-in. TS, 135-145 ft.

WELL PUMPING TEST(S)

Date	Yield (gpm)	Initial WL (ft)	Specific Capacity (gpm/ft-dd)
12/9/99	201	132.57	86.64

INSTALLED EQUIPMENT:

Pump

Installation Date:	7/9/09
Type:	Submersible
Manufacture:	Crown Model 6M250
Serial #:	9929
Impeller Number:	5 Stage
Flow:	200 gpm
Total Dynamic Head:	250 ft.

Motor

Manufacturer:	Franklin Motor
Serial #:	99519220035
Horsepower:	20
Date Code:	3/2000

WATER RIGHTS

Certificate Number:	G1-00027C
Instantaneous:	100 gpm
Continuous:	108 ac-ft/yr, 35.19 MG/Yr
Certificate Number:	G1-24363C
Instantaneous:	100 gpm
Continuous:	12 ac-ft/yr, 3.91 MG/Yr

WELL NO. 13R DATA SHEET

LOCATION:

Street Address: 26002 NE 70th Street
Description: T25N/R6E, Section 12, SW4/SW4/NW4
Elevation: 665 feet

WELL CONSTRUCTION:

Date Drilled: January 31, 2006
Drilling Contractor: Schneider Drilling Co., Inc.
Drilling Method: Rotary – Direct & Reverse Circulation
Completion Casing Diameter, Depth: 12-in., 810 ft.
Screen Diameter, Interval: 6-in. PS, 826-941 ft.

WELL PUMPING TEST(S)

Date	Yield (gpm)	Initial WL (ft)	Specific Capacity (gpm/ft-dd)
7/31/90	180	523.0	3.4
1/23/06	750	531	8.7

INSTALLED EQUIPMENT:

Pump

Installation Date: 2/28/09
Type: Submersible
Manufacture: Crown
Impeller Number: 15 Stage 6” bowls
Model # 56-230 Serial
Flow: 170 gpm
Total Dynamic Head: 800 ft.

Motor

Manufacturer: Franklin
Model Number: 2366196025
Serial #: 04619-28-0039
Horsepower: 60 Ph: 3

WATER RIGHTS

Certificate Number: G1-25963C
Instantaneous: 200 gpm
Continuous: 224 ac-ft/yr, 73 MG/Yr

Certificate Number: G1-25831C
Instantaneous: 62.5 gpm
Continuous: 86.7 ac-ft/yr, 28.25 MG/Yr

WELL NO. 15 DATA SHEET

Description: T24N/R6E, Section 14, NW4/SE4
Elevation: 455 feet mean sea level

WELL CONSTRUCTION:
Date Drilled: July 17, 1996
Drilling Contractor: Holt Drilling, Inc.
Drilling Method: Cable Tool
Completion Casing Diameter, Depth: 16-in., 225 ft.
Screen Diameter, Interval: 10-in. PS, 225-247 ft., 253-270 ft., 280-305 ft.

WELL PUMPING TEST(S)

Date	Yield (gpm)	Initial WL (ft)	Specific Capacity (gpm/ft-dd)
July 25, 1996	1040	72.53	32.9

INSTALLED EQUIPMENT:
Pump

Motor

WATER RIGHTS
Certificate Number: G127883 Pending
Instantaneous: 1,600 gpm
Continuous: 0 ac-ft/yr

Additional Point of Withdrawal for Zone II wells 1R, 2.1+2.2, and 10
Application submitted December, 1997 – Pending,

Certificate Number: CG1-00342C Pending Priority Date 8/7/2001
Instantaneous: 300 gpm (Supplemental)
Continuous: 448 ac-ft/yr (Supplemental)

Certificate Number: CG1-25438C: Priority Date 8/17/2001
Instantaneous: 200 gpm (Supplemental)
Continuous: 0 ac-ft/yr (Supplemental)

Certificate Number: G1-27166C: Priority Date 8/7/2001
Instantaneous: 500 gpm (Supplemental)
Continuous: 379 ac-ft/yr (Supplemental)

Certificate Number: G1-09533C: Priority Date 8/7/2001
Instantaneous: 500 gpm (Supplemental)
Continuous: 800 ac-ft/yr (Supplemental)

WELL NO. 36 DATA SHEET

Description: T25N/R6E, Section 36, SW4/NW4
Elevation: 520 feet mean sea level

WELL CONSTRUCTION:
Date Drilled: 11/1/2003 – 2/10/2003
Drilling Contractor: Schneider Drilling Co.
Drilling Method: Rotary – Direct & Reverse Circulation
Completion Casing Diameter, Depth: 8-in., 1,030 ft.
Screen Diameter, Interval: 5-in. PS, 833-843 ft., 930-940 ft., 990-1,020 ft.

WELL PUMPING TEST(S)

Date	Yield (gpm)	Initial WL (ft)	Specific Capacity (gpm/ft-dd)
2/16/2004	400	310	4.9

INSTALLED EQUIPMENT:
Pump

Motor

WATER RIGHTS
Certificate Number: G127884 Pending
Instantaneous: 1,000 gpm
Continuous: 1,200 ac-ft/yr

Application submitted December 10, 1997 – Pending

This page intentionally left blank.

Historical Monthly Water Production and Purchases by Source (2006-2016)

2006	Total Monthly Production or Purchase (gallons)													
	January	February	March	April	May	June	July	August	September	October	November	December	Total	Total (MG)
Well Withdrawals														
Well 1R	0	0	0	0	7,757,000	15,780,000	17,537,000	16,477,000	13,410,000	14,209,000	2,527,000	0	87,697,000	88
Well 2.1	0	0	0	8,700	13,319,300	5,278,300	0	800	0	0	0	100	18,607,200	19
Well 2.2	0	0	0	0	0	11,944,000	22,390,000	22,013,000	14,361,000	2,471,000	16,436,000	0	89,615,000	90
Well 4R	0	0	0	0	0	0	2,211,000	14,508,000	5,515,000	0	0	2,994,000	25,228,000	25
Well 7	64,897,000	82,200,000	87,646,000	90,362,000	73,956,000	31,781,000	0	0	0	0	62,765,000	68,466,000	562,073,000	562
Well 8	0	0	0	0	0	24,197,000	122,146,000	120,052,000	29,880,000	9,148,000	4,730,000	0	310,153,000	310
Well 9	28,197,000	0	0	0	0	0	0	0	0	0	0	0	28,197,000	28
Well 10	0	0	0	0	13,890,000	18,481,000	20,769,000	20,820,000	13,743,000	1,484,000	694,000	0	89,881,000	90
Well 11.1	0	0	0	0	0	0	0	0	0	0	0	0	0	0
Well 11.2	36,617,000	27,811,000	31,477,000	39,141,000	40,734,000	53,137,000	72,164,000	65,577,000	38,244,000	31,310,000	27,667,000	20,435,000	484,314,000	484
Well 12	125,300	17,800	37,700	9,600	304,800	998,600	6,207,700	6,588,400	5,484,500	4,747,200	0	0	24,521,600	25
Well 13	0	0	19,200	2,685,000	5,587,500	5,960,300	8,860,200	7,087,100	2,329,600	60,300	7,690,900	3,488,600	43,768,700	44
Well 14	0	0	0	0	0	0	0	0	0	0	0	0	0	0
Well 15	0	0	0	0	0	2,171,000	16,408,000	43,147,000	61,282,000	67,092,000	1,220,000	0	191,320,000	191
Subtotal Wells	129,836,300	110,028,800	119,179,900	132,206,300	155,548,600	169,728,200	288,692,900	316,270,300	184,249,100	130,521,500	123,729,900	95,383,700	1,955,375,500	1955
Purchased Water														
North	8,775,536	7,321,274	7,926,332	2,812,630	34,034	0	0	0	0	16,680	1,765,878	2,431,823	31,084,187	31
South	0	0	0	0	0	0	0	0	0	0	2,128,000	18,073,000	20,201,000	20
Subtotal Purchases	8,775,536	7,321,274	7,926,332	2,812,630	34,034	0	0	0	0	16,680	3,893,878	20,504,823	51,285,187	51
Total Water Production/Purchases	138,611,836	117,350,074	127,106,232	135,018,930	155,582,634	169,728,200	288,692,900	316,270,300	184,249,100	130,538,180	127,623,778	115,888,523	2,006,660,687	2007
NESSWD Interties	55,000	(17,000)	(5,000)	(1,100,000)	1,165,000	(149,000)	125,000	10,000	(43,000)	(39,000)	35,000	1,000	38,000	0
Recharge	27,834,156	23,504,018	24,969,698	21,005,610	0	0	0	0	0	0	19,021,500	25,980,300	142,315,282	142
Total Water to System	110,832,680	93,829,056	102,131,533	112,913,320	156,747,634	169,579,200	288,817,900	316,280,300	184,206,100	130,499,180	108,637,278	89,909,223	1,864,383,405	1864

2007	Total Monthly Production or Purchase (gallons)													
	January	February	March	April	May	June	July	August	September	October	November	December	Total	Total (MG)
Well Withdrawals														
Well 1R	0	0	0	9,379,000	19,462,000	19,386,000	18,349,000	18,105,000	18,758,000	10,695,000	0	0	114,134,000	114
Well 2.1	9,226,400	11,295,900	13,851,400	12,919,900	5,705,100	0	0	0	0	0	0	6,400	53,005,100	53
Well 2.2	0	0	0	0	13,027,000	22,416,000	21,433,000	21,325,000	21,775,000	6,880,000	0	0	106,856,000	107
Well 4R	0	0	0	0	20,661,000	19,250,000	1,450,000	0	0	0	0	0	41,361,000	41
Well 7	68,541,000	60,882,000	75,286,000	57,759,000	58,711,000	0	0	0	0	14,548,000	70,399,000	83,339,000	489,465,000	489
Well 8	0	0	0	1,000	4,278,000	97,059,000	112,687,000	107,190,000	73,385,000	37,317,000	0	0	431,917,000	432
Well 9	0	0	0	0	0	0	0	0	0	0	0	0	0	0
Well 10	0	0	0	12,000	22,440,000	24,047,000	22,833,000	22,583,000	23,111,000	21,412,000	0	0	136,438,000	136
Well 11.1	0	0	0	0	6,561,000	9,635,000	7,104,000	6,846,000	2,648,000	635,000	1,495,000	0	34,924,000	35
Well 11.2	29,376,000	24,069,000	20,773,000	16,124,000	0	4,034,000	54,481,000	48,882,000	29,095,000	18,320,000	28,146,000	37,973,000	311,273,000	311
Well 12	0	1,800	2,500	9,400	5,513,400	7,176,700	6,342,100	8,045,100	6,808,400	3,671,800	0	0	37,571,200	38
Well 13	8,859,800	7,400,400	1,164,700	161,400	231,300	430,300	6,239,800	2,195,600	1,019,300	122,700	28,200	153,000	28,006,500	28
Well 14	0	0	0	0	0	0	0	0	0	0	0	0	0	0
Well 15	1,619,000	0	0	0	0	0	16,545,000	6,565,000	1,035,000	0	0	0	25,764,000	26
Subtotal Wells	117,622,200	103,649,100	111,077,600	96,365,700	156,589,800	203,434,000	267,463,900	241,736,700	177,634,700	113,601,500	100,068,200	121,471,400	1,810,714,800	1811
Purchased Water														
North	1,923,108	1,950,634	7,333,616	7,153,648	0	0	0	0	0	22,365	7,595,192	8,148,787	34,127,350	34
South	1,075,000	32,555,000	13,617,000	18,605,000	0	0	0	0	0	0	0	0	65,852,000	66
Subtotal Purchases	2,998,108	34,505,634	20,950,616	25,758,648	0	0	0	0	0	22,365	7,595,192	8,148,787	99,979,350	100
Total Water Production/Purchases	120,620,308	138,154,734	132,028,216	122,124,348	156,589,800	203,434,000	267,463,900	241,736,700	177,634,700	113,623,865	107,663,392	129,620,187	1,910,694,150	1911
NESSWD Interties	54,000	(75,000)	1,000	507,000	(285,000)	(219,000)	100,000	(61,000)	(30,000)	77,000	(79,000)	(68,000)	(78,000)	0
Recharge	21,515,100	20,201,080	26,848,320	11,078,336	0	0	0	0	0	0	5,589,864	19,509,400	104,742,100	105
Total Water to System	99,159,208	117,878,654	105,180,896	111,553,012	156,304,800	203,215,000	267,563,900	241,675,700	177,604,700	113,700,865	101,994,528	110,042,787	1,805,874,050	1806

2008	Total Monthly Production or Purchase (gallons)													
	January	February	March	April	May	June	July	August	September	October	November	December	Total	Total (MG)
Well Withdrawals														
Well 1R	0	1,000	0	0	0	17,609,000	19,953,000	21,724,000	12,985,000	0	0	0	72,272,000	72
Well 2.1	9,777,800	12,044,200	12,558,100	10,903,500	14,388,100	12,055,200	12,544,800	12,437,200	4,300	0	0	0	96,713,200	97
Well 2.2	0	0	0	0	0	0	1,000	0	20,725,000	4,698,000	0	0	25,424,000	25
Well 4R	0	0	0	0	0	0	0	0	0	0	0	0	0	0
Well 7	71,990,000	70,134,000	80,438,000	75,824,000	52,766,000	53,360,000	0	0	0	7,997,000	758,000	0	413,267,000	413
Well 8	0	0	0	0	0	8,852,000	106,579,000	92,156,000	34,826,000	428,000	0	0	242,841,000	243
Well 9	0	0	0	0	0	0	0	0	0	0	72,150,000	85,554,000	157,704,000	158
Well 10	0	0	0	0	17,878,000	19,123,000	19,966,000	20,475,000	17,565,000	0	0	0	95,007,000	95
Well 11.1	5,962,000	0	0	0	0	0	3,267,000	0	0	0	0	0	9,229,000	9
Well 11.2	29,592,000	50,098,000	46,194,000	30,141,000	39,256,000	37,767,000	68,738,000	60,360,000	34,616,000	34,918,000	23,647,000	28,980,000	484,307,000	484
Well 12	0	0	0	0	2,377,600	3,805,100	8,129,500	5,869,700	4,457,200	2,481,800	5,100	0	27,126,000	27
Well 13	3,516,600	5,455,400	6,123,100	3,659,700	2,675,500	2,238,600	4,760,900	3,796,000	2,922,600	1,615,900	466,000	2,543,900	39,774,200	40
Well 14	0	0	0	0	0	0	0	0	0	0	0	0	0	0
Well 15	0	0	0	0	0	1,229,000	28,894,000	11,332,000	37,097,000	67,803,000	2,000	0	146,357,000	146
Subtotal Wells	120,838,400	137,732,600	145,313,200	120,528,200	129,341,200	156,038,900	272,833,200	228,149,900	165,198,100	119,941,700	97,028,100	117,077,900	1,810,021,400	1810
Purchased Water														
North	5,855,494	3,066,576	0	8,180,726	0	0	0	0	0	0	7,489,275	8,066,582	32,658,652	33
South	10,000,000	14,956,000	20,000,000	22,787,000	14,736,000	2,755,000	0	0	0	36,000	12,043,000	69,000	97,382,000	97
Subtotal Purchases	15,855,494	18,022,576	20,000,000	30,967,726	14,736,000	2,755,000	0	0	0	36,000	19,532,275	8,135,582	130,040,652	130
Total Water Production/Purchases	136,693,894	155,755,176	165,313,200	151,495,926	144,077,200	158,793,900	272,833,200	228,149,900	165,198,100	119,977,700	116,560,375	125,213,482	1,940,062,052	1940
NESSWD Interties	131,000	10,000	(1,082,000)	(667,900)	1,753,900	399,000	(377,000)	12,000	14,000	(51,000)	(16,000)	(358,000)	(232,000)	0
Recharge	38,703,600	39,756,900	34,570,900	30,712,100	0	0	0	0	0	0	22,852,000	26,189,300	192,784,800	193
Total Water to System	98,121,294	116,008,276	129,660,300	120,115,926	145,831,100	159,192,900	272,456,200	228,161,900	165,212,100	119,926,700	93,692,375	98,666,182	1,747,045,252	1747

2009	Total Monthly Production or Purchase (gallons)													
	January	February	March	April	May	June	July	August	September	October	November	December	Total	Total (MG)
Well Withdrawals														
Well 1R	0	0	0	0	7,950,000	18,240,000	17,600,000	13,700,000	14,350,000	11,330,000	0	0	83,170,000	83
Well 2.1	0	0	0	0	0	0	0	0	0	0	0	0	0	0
Well 2.2	0	0	0	0	17,770,000	21,870,000	21,580,000	22,610,000	16,350,000	10,000	0	0	100,190,000	100
Well 4R	0	360,000	540,000	35,320,000	50,530,000	73,580,000	66,920,000	67,640,000	56,620,000	6,800,000	25,250,000	48,630,000	432,190,000	432
Well 7	0	0	0	0	41,550,000	32,920,000	0	0	0	45,530,000	75,570,000	79,750,000	275,320,000	275
Well 8	0	0	0	0	0	54,390,000	118,610,000	95,150,000	41,180,000	0	0	0	309,330,000	309
Well 9	81,980,000	76,870,000	71,150,000	75,790,000	17,560,000	0	0	0	0	0	0	0	323,350,000	323
Well 10	0	0	0	0	9,630,000	21,610,000	19,100,000	17,440,000	16,130,000	20,840,000	0	0	104,750,000	105
Well 11.1	0	0	0	0	0	0	0	0	0	0	0	0	0	0
Well 11.2	37,330,000	32,470,000	42,980,000	0	30,000	0	16,740,000	29,260,000	4,640,000	36,420,000	19,270,000	0	219,140,000	219
Well 12	0	0	0	0	1,510,000	7,610,000	8,210,000	7,160,000	4,060,000	4,860,000	0	0	33,410,000	33
Well 13	70,000	450,000	620,000	1,580,000	3,960,000	3,560,000	6,570,000	5,630,000	1,260,000	120,000	3,000,000	1,760,000	28,580,000	29
Well 15	0	0	0	0	0	5,530,000	35,840,000	7,510,000	30,000	0	0	0	48,910,000	49
Subtotal Wells	119,380,000	110,150,000	115,290,000	112,690,000	150,490,000	239,310,000	311,170,000	266,100,000	154,620,000	125,910,000	123,090,000	130,140,000	1,958,340,000	1,958
Purchased Water														
North	10,350,000	8,070,000	8,610,000	7,560,000	0	0	40,000	0	0	10,000	6,780,000	8,060,000	49,480,000	49
South	20,090,000	25,430,000	23,050,000	22,290,000	0	0	0	0	0	50,000	28,530,000	28,270,000	147,710,000	148
Subtotal Purchases	30,440,000	33,500,000	31,660,000	29,850,000	0	0	40,000	0	0	60,000	35,310,000	36,330,000	197,190,000	197
Total Water Production/Purchases	149,820,000	143,650,000	146,950,000	142,540,000	150,490,000	239,310,000	311,210,000	266,100,000	154,620,000	125,970,000	158,400,000	166,470,000	2,155,530,000	2156
NESSWD Interties	413,980	(71)	146	(1,352)	1,180	(55)	2	81	166	(163)	11	(73)	413,852	0.414
Recharge	42,350,000	50,500,000	56,550,000	50,500,000	0	0	0	0	0	0	65,700,000	61,370,000	326,970,000	327
Total Water to System	107,883,980	93,149,929	90,400,146	92,038,648	150,491,180	239,309,945	311,210,002	266,100,081	154,620,166	125,969,837	92,700,011	105,099,927	1,828,973,852	1829

2010	Total Monthly Production or Purchase (gallons)													
	January	February	March	April	May	June	July	August	September	October	November	December	Total	Total (MG)
Well Withdrawals														
Well 1R	0	0	0	0	0	0	15,950,000	22,840,000	20,980,000	12990000	0	0	72,760,000	73
Well 2.1	0	0	0	120,000	0	0	0	0	0	0	0	0	120,000	0
Well 2.2	0	0	0	0	0	120,000	17,000,000	23,950,000	20,520,000	12,970,000	0	0	74,560,000	75
Well 4R	29,190,000	16,910,000	17,470,000	29,920,000	56,410,000	10,840,000	55,950,000	17,820,000	20,200,000	0	26,090,000	36,330,000	317,130,000	317
Well 7	74,980,000	64,430,000	52,030,000	47,230,000	32,640,000	64,010,000	6,680,000	0	11,710,000	42,880,000	52,160,000	51,590,000	500,340,000	500
Well 8	0	0	0	0	5,510,000	350,000	81,420,000	115,770,000	35,200,000	0	0	0	238,250,000	238
Well 9	0	0	0	0	0	0	0	0	0	0	0	0	0	0
Well 10	0	0	0	0	0	0	17,360,000	20,080,000	19,150,000	12480000	0	0	69,070,000	69
Well 11.1	0	0	0	0	0	0	0	0	0	0	0	0	0	0
Well 11.2	28,990,000	27,620,000	16,310,000	4,560,000	22,640,000	37,600,000	35,380,000	47,940,000	2,950,000	30,270,000	8,240,000	0	262,500,000	263
Well 12	0	0	0	0	990,000	3,420,000	4,690,000	8,280,000	2,350,000	4,300,000	0	0	24,030,000	24
Well 13	1,120,000	440,000	580,000	210,000	1,960,000	1,100,000	3,090,000	8,080,000	2,400,000	60,000	0	0	19,040,000	19
Well 15	0	0	13,380,000	230,000	0	0	0	0	0	0	0	0	13,610,000	14
Subtotal Wells	134,280,000	109,400,000	99,770,000	82,270,000	120,150,000	117,440,000	237,520,000	264,760,000	135,460,000	115,950,000	86,490,000	87,920,000	1,591,410,000	1591
Purchased Water														
North	8,690,000	7,140,000	8,640,000	9,490,000	1,370,000	40,000	0	0	60,000	0	12,210,000	11,600,000	59,240,000	59
South	30,770,000	26,600,000	16,520,000	19,150,000	2,450,000	60,000	0	0	0	30,000	9,550,000	10,360,000	115,490,000	115
Subtotal Purchases	39,460,000	33,740,000	25,160,000	28,640,000	3,820,000	100,000	0	0	60,000	30,000	21,760,000	21,960,000	174,730,000	175
Total Water Production/Purchases	173,740,000	143,140,000	124,930,000	110,910,000	123,970,000	117,540,000	237,520,000	264,760,000	135,520,000	115,980,000	108,250,000	109,880,000	1,766,140,000	1,766
NESSWD Interties	24	114	(86)	53	31	990	(1,044)	0	114	(72)	36	(32)	66	0
Recharge	63,430,000	55,700,000	5,070,000	7,700,000	0	0	0	0	0	0	10,180,000	8,470,000	150,550,000	151
Total Water to System	110,310,024	87,440,114	119,859,914	103,210,053	123,969,969	117,540,990	237,518,956	264,760,000	135,520,114	115,979,928	98,070,036	101,409,968	1,615,590,066	1,616

2011	Total Monthly Production or Purchase (gallons)													
	January	February	March	April	May	June	July	August	September	October	November	December	Total	Total (MG)
Well Withdrawals														
Well 1R	0	0	0	8,570,000	13,920,000	21,290,000	22,250,000	18,800,000	0	0	0	0	84,830,000	85
Well 2.1	0	0	0	0	0	0	0	0	0	0	0	0	0	0
Well 2.2	0	0	15,220,000	4,790,000	11,210,000	17,200,000	21,210,000	20,900,000	6,080,000	2,840,000	0	0	99,450,000	99
Well 4R	5,900,000	16,750,000	17,590,000	12,900,000	27,520,000	26,590,000	10,650,000	55,350,000	50,940,000	17,040,000	18,650,000	18,340,000	278,220,000	278
Well 7	53,420,000	50,720,000	48,260,000	45,940,000	47,930,000	32,730,000	65,570,000	0	5,610,000	55,740,000	51,820,000	58,310,000	516,050,000	516
Well 8	0	0	0	0	0	0	15,810,000	117,180,000	106,590,000	0	0	0	239,580,000	240
Well 9	0	10,000	0	0	0	0	0	0	10,000	0	0	0	20,000	0
Well 10	0	0	30,000	0	8,180,000	20,750,000	21,980,000	10,750,000	0	0	0	0	61,690,000	62
Well 11.1	0	0	0	0	0	0	0	0	0	0	0	100,000	100,000	0
Well 11.2	29,980,000	9,670,000	4,030,000	15,220,000	0	4,880,000	33,280,000	12,770,000	21,720,000	6,540,000	0	30,000	138,120,000	138
Well 12	0	0	0	0	2,580,000	4,320,000	7,030,000	8,880,000	6,300,000	2,640,000	140,000	0	31,890,000	32
Well 13	10,000	0	0	0	620,000	0	360,000	1,470,000	2,530,000	1,240,000	290,000	0	6,520,000	7
Subtotal Wells	89,310,000	77,150,000	85,130,000	87,420,000	111,960,000	127,760,000	198,140,000	246,100,000	199,780,000	86,040,000	70,900,000	76,780,000	1,456,470,000	1,456
Purchased Water														
North	12,700,000	10,800,000	12,080,000	11,550,000	1,460,000	0	0	0	0	20,000	11,560,000	11,980,000	72,150,000	72
South	12,750,000	11,380,000	10,220,000	10,130,000	810,000	0	10,000	0	50,000	17,610,000	16,120,000	19,940,000	99,020,000	99
Subtotal Purchases	25,450,000	22,180,000	22,300,000	21,680,000	2,270,000	0	10,000	0	50,000	17,630,000	27,680,000	31,920,000	171,170,000	171
Total Water Production/Purchases	114,760,000	99,330,000	107,430,000	109,100,000	114,230,000	127,760,000	198,150,000	246,100,000	199,830,000	103,670,000	98,580,000	108,700,000	1,627,640,000	1,628
NESSWD Interties	25	400	(412)	19	(34)	17	21	(39)	77	(51)	(1)	12	34	0
Recharge	8,920,000	7,780,000	9,610,000	7,670,000	0	0	0	0	0	0	8,950,000	9,240,000	52,170,000	52
Total Water to System	105,840,025	91,550,400	97,819,588	101,430,019	114,229,966	127,760,017	198,150,021	246,099,961	199,830,077	103,669,949	89,629,999	99,460,012	1,575,470,034	1,575

2012	Total Monthly Production or Purchase (gallons)													
	January	February	March	April	May	June	July	August	September	October	November	December	Total	Total (MG)
Well Withdrawals														
Well 1R	0	0	510,000	0	1,140,000	21,620,000	22,380,000	22,270,000	13,620,000	0	970,000	3,700,000	86,210,000	86
Well 2.1	0	0	0	0	0	0	0	0	0	0	0	0	0	0
Well 2.2	0	0	0	0	0	0	4,770,000	20,960,000	20,550,000	16,680,000	0	0	62,960,000	63
Well 4R	59,510,000	41,570,000	43,990,000	39,440,000	54,650,000	36,320,000	54,740,000	34,840,000	24,010,000	7,240,000	0	0	396,310,000	396
Well 7	7,710,000	18,980,000	23,270,000	27,850,000	35,780,000	26,610,000	56,730,000	88,820,000	81,330,000	52,110,000	40,150,000	45,920,000	505,260,000	505
Well 8	0	0	0	0	0	0	0	0	0	0	0	0	0	0
Well 9	0	0	0	0	0	0	0	0	0	0	0	0	0	0
Well 10	0	0	0	0	0	370,000	18,690,000	22,090,000	4,490,000	0	0	0	45,640,000	46
Well 11.1	0	0	0	0	0	0	0	0	0	0	0	0	0	0
Well 11.2	0	0	0	10,000	0	2,840,000	1,150,000	29,130,000	41,560,000	31,170,000	29,790,000	21,740,000	157,390,000	157
Well 12	0	0	0	0	2,260,000	1,720,000	2,000,000	5,510,000	790,000	1,780,000	3,530,000	3,460,000	21,050,000	21
Well 13	1,420,000	7,180,000	8,190,000	7,950,000	2,730,000	2,920,000	6,940,000	7,290,000	840,000	20,000	290,000	0	45,770,000	46
Subtotal Wells	68,640,000	67,730,000	75,960,000	75,250,000	96,560,000	92,400,000	167,400,000	230,910,000	187,190,000	109,000,000	74,730,000	74,820,000	1,320,590,000	1,321
Purchased Water														
North	9,450,000	4,280,000	4190000	4,220,000	50000	0	0	0	8240000	3290000	70,000	0	33,790,000	34
South	23,950,000	27,750,000	27,130,000	25,910,000	30,450,000	30,480,000	30210000	32590000	25190000	26,640,000	29,960,000	31,490,000	341,750,000	342
Subtotal Purchases	33,400,000	32,030,000	31,320,000	30,130,000	30,500,000	30,480,000	30,210,000	32,590,000	33,430,000	29,930,000	30,030,000	31,490,000	375,540,000	376
Total Water Production/Purchases	102,040,000	99,760,000	107,280,000	105,380,000	127,060,000	122,880,000	197,610,000	263,500,000	220,620,000	138,930,000	104,760,000	106,310,000	1,696,130,000	1,696
NESSWD Interties	(400)	(200)	(300)	(300)	(100)	0	(100)	300	200	(300)	(400)	(400)	(2,000)	0
Recharge	7,420,000	8,240,000	8,820,000	8,630,000	110,000	0	0	0	0	0	0	0	33,220,000	33
Total Water to System	94,619,600	91,519,800	98,459,700	96,749,700	126,949,900	122,880,000	197,609,900	263,500,300	220,620,200	138,929,700	104,759,600	106,309,600	1,662,908,000	1,663

2013	Total Monthly Production or Purchase (gallons)													
	January	February	March	April	May	June	July	August	September	October	November	December	Total	Total (MG)
Well Withdrawals														
Well 1R	5,390,000	5,530,000	9,370,000	5,780,000	10,090,000	16,470,000	22,320,000	18,000,000	1,400,000	9,460,000	1,050,000	2,210,000	107,070,000	107
Well 2.1	0	0	0	0	0	0	0	0	0	0	0	0	0	0
Well 2.2	0	0	320,000	0	0	11,590,000	21,020,000	10,780,000	5,550,000	0	0	0	49,260,000	49
Well 4R	1,100,000	8,370,000	0	11,950,000	22,720,000	16,400,000	52,980,000	45,150,000	21,650,000	5,080,000	1,690,000	0	187,090,000	187
Well 7	49,540,000	41,980,000	47,370,000	43,320,000	60,880,000	72,120,000	60,710,000	0	0	0	0	0	375,920,000	376
Well 8	0	0	0	0	0	0	30,510,000	99,880,000	67,010,000	8,580,000	0	0	205,980,000	206
Well 9	0	0	0	0	0	0	0	0	0	32,970,000	51,280,000	36,690,000	120,940,000	121
Well 10	0	0	0	0	0	210,000	21,450,000	22,330,000	6,540,000	50,000	0	0	50,580,000	51
Well 11.1	0	0	0	0	0	0	0	0	0	0	0	0	0	0
Well 11.2	20,130,000	11,320,000	19,820,000	7,370,000	1,540,000	19,110,000	13,370,000	15,280,000	6,430,000	22,330,000	23,020,000	28,980,000	188,700,000	189
Well 12	610,000	0	0	1,650,000	90,000	4,740,000	3,790,000	3,020,000	5,260,000	3,820,000	620,000	0	23,600,000	24
Well 13	6,630,000	6,180,000	750,000	790,000	4,900,000	2,110,000	8,080,000	6,950,000	0	30,000	6,760,000	8,390,000	51,570,000	52
Subtotal Wells	83,400,000	73,380,000	77,630,000	70,860,000	100,220,000	142,750,000	234,230,000	221,390,000	113,840,000	82,320,000	84,420,000	76,270,000	1,360,710,000	1,361
Purchased Water														
North	3,560,000	4,790,000	3,860,000	950,000	100,000	550,000	970,000	510,000	320,000	20,000	3,240,000	4,620,000	23,490,000	23
South	27,290,000	22,850,000	27,160,000	30,260,000	30,990,000	30,780,000	37,820,000	20,010,000	29,750,000	26,500,000	21,740,000	37,010,000	342,160,000	342
Subtotal Purchases	30,850,000	27,640,000	31,020,000	31,210,000	31,090,000	31,330,000	38,790,000	20,520,000	30,070,000	26,520,000	24,980,000	41,630,000	365,650,000	366
Total Water Production/Purchases	114,250,000	101,020,000	108,650,000	102,070,000	131,310,000	174,080,000	273,020,000	241,910,000	143,910,000	108,840,000	109,400,000	117,900,000	1,726,360,000	1,726
NESSWD Interties	200	200	200	100	(100)	(200)	(200)	(300)	0	(200)	0	(100)	(400)	0
Recharge	7,420,000	8,050,000	1,090,000	0	0	0	0	0	0	0	7,000,000	8,950,000	32,510,000	33
Total Water to System	106,830,200	92,970,200	107,560,200	102,070,100	131,309,900	174,079,800	273,019,800	241,909,700	143,910,000	108,839,800	102,400,000	108,949,900	1,693,849,600	1,694

2014	Total Monthly Production or Purchase (gallons)													
	January	February	March	April	May	June	July	August	September	October	November	December	Total	Total (MG)
Well Withdrawals														
Well 1R	0	0	0	0	20,770,000	18,470,000	21,030,000	19,460,000	13,260,000	4,760,000	0	3,820,000	101,570,000	102
Well 2.1	0	0	0	0	0	0	0	0	0	0	0	0	0	0
Well 2.2	0	0	0	0	0	2,800,000	22,660,000	22,620,000	6,170,000	7,330,000	2,470,000	0	64,050,000	64
Well 4R	10,000	0	0	310,000	28,420,000	46,250,000	32,160,000	48,470,000	30,890,000	9,980,000	0	0	196,490,000	196
Well 7	0	0	0	0	51,130,000	71,900,000	38,120,000	0	0	32,360,000	23,650,000	56,150,000	273,310,000	273
Well 8	0	0	0	0	0	0	63,290,000	111,110,000	75,410,000	9,350,000	0	0	259,160,000	259
Well 9	43,900,000	41,420,000	43,360,000	47,630,000	1,810,000	0	0	0	0	0	0	0	178,120,000	178
Well 10	0	0	0	0	0	11,460,000	23,060,000	10,050,000	7,820,000	0	0	0	52,390,000	52
Well 11.1	0	0	0	0	0	0	0	0	0	0	0	0	0	0
Well 11.2	24,920,000	30,030,000	27,160,000	25,250,000	620,000	110,000	39,390,000	12,510,000	170,000	10,220,000	32,150,000	22,930,000	225,460,000	225
Well 12	0	0	0	0	4,000,000	6,480,000	10,580,000	9,210,000	6,350,000	4,070,000	2,700,000	0	43,390,000	43
Well 13	8,070,000	7,500,000	8,210,000	6,420,000	1,220,000	520,000	2,490,000	1,760,000	590,000	20,000	40,000	3,870,000	40,710,000	41
Subtotal Wells	76,900,000	78,950,000	78,730,000	79,610,000	107,970,000	157,990,000	252,780,000	235,190,000	140,660,000	78,090,000	61,010,000	86,770,000	1,434,650,000	1,435
Purchased Water														
North	3,860,000	3,950,000	4,300,000	3,250,000	10,000	30,000	220,000	360,000	20,000	10,000	2,850,000	2,190,000	21,050,000	21
South	28,830,000	23,510,000	32,240,000	23,260,000	32,050,000	30,500,000	30,190,000	26,870,000	20,670,000	34,080,000	45,750,000	17,300,000	345,250,000	345
Subtotal Purchases	32,690,000	27,460,000	36,540,000	26,510,000	32,060,000	30,530,000	30,410,000	27,230,000	20,690,000	34,090,000	48,600,000	19,490,000	366,300,000	366
Total Water Production/Purchases	109,590,000	106,410,000	115,270,000	106,120,000	140,030,000	188,520,000	283,190,000	262,420,000	161,350,000	112,180,000	109,610,000	106,260,000	1,800,950,000	1,801
NESSWD Interties	61,000	78,000	(136,000)	77,000	3,000	(54,000)	(52,000)	39,000	(1,000)	19,000	(13,000)	(15,000)	6,000	0
Recharge	7,220,000	8,040,000	9,880,000	6,150,000	0	0	0	0	0	0	2,030,000	2,630,000	35,950,000	36
Total Water to System	102,431,000	98,448,000	105,254,000	100,047,000	140,033,000	188,466,000	283,138,000	262,459,000	161,349,000	112,199,000	107,567,000	103,615,000	1,765,006,000	1,765

2015	Total Monthly Production or Purchase (gallons)													
	January	February	March	April	May	June	July	August	September	October	November	December	Total	Total (MG)
Well Withdrawals														
Well 1R	3,790,000	11,380,000	15,230,000	23,840,000	16,640,000	20,990,000	21,110,000	20,050,000	3,460,000	2,080,000	770,000	0	139,340,000	139
Well 2.1	0	0	0	0	0	0	0	0	0	0	0	0	0	0
Well 2.2	0	0	390,000	0	6,710,000	18,310,000	20,180,000	21,180,000	17,050,000	14,790,000	1,830,000	0	100,440,000	100
Well 4R	0	0	0	420,000	2,900,000	47,350,000	61,200,000	39,570,000	13,020,000	7,390,000	380,000	860,000	173,090,000	173
Well 7	38,850,000	39,440,000	35,310,000	29,480,000	54,780,000	37,160,000	0	0	18,810,000	13,710,000	16,700,000	46,970,000	331,210,000	331
Well 8	0	0	0	0	0	57,380,000	111,720,000	98,020,000	15,310,000	0	0	0	282,430,000	282
Well 9	0	0	0	0	0	0	0	0	0	0	0	0	0	0
Well 10	0	0	530,000	0	0	0	680,000	11,380,000	12,270,000	5,210,000	1,700,000	180,000	31,950,000	32
Well 11.1	0	0	0	0	0	0	0	0	0	0	0	0	0	0
Well 11.2	25,390,000	21,610,000	26,380,000	21,540,000	40,570,000	53,450,000	43,660,000	46,100,000	51,770,000	62,190,000	43,410,000	24,090,000	460,160,000	460
Well 12	0	0	780,000	2,840,000	6,000,000	3,480,000	3,450,000	2,760,000	5,580,000	4,270,000	3,450,000	2,730,000	35,340,000	35
Well 13	6,670,000	7,610,000	2,640,000	560,000	0	0	0	0	10,000	0	0	0	17,490,000	17
Subtotal Wells	74,700,000	80,040,000	81,260,000	78,680,000	127,600,000	238,120,000	262,000,000	239,060,000	137,280,000	109,640,000	68,240,000	74,830,000	1,571,450,000	1,571
Purchased Water														
North	4,130,000	3,540,000	320,000	0	250,000	9,890,000	12,730,000	10,370,000	60,000	20,000	40,000	490,000	41,840,000	42
South	30,540,000	26,180,000	27,050,000	29,440,000	31,510,000	31,560,000	44,870,000	30,410,000	6,790,000	11,170,000	32,890,000	26,460,000	328,870,000	329
Subtotal Purchases	34,670,000	29,720,000	27,370,000	29,440,000	31,760,000	41,450,000	57,600,000	40,780,000	6,850,000	11,190,000	32,930,000	26,950,000	370,710,000	371
Total Water Production/Purchases	109,370,000	109,760,000	108,630,000	108,120,000	159,360,000	279,570,000	319,600,000	279,840,000	144,130,000	120,830,000	101,170,000	101,780,000	1,942,160,000	1,942
NESSWD Interties	(13,000)	45,000	(49,000)	60,000	(3,210,000)	3,074,000	61,000	83,000	(1,000)	44,000	(111,000)	74,000	57,000	0
Recharge	8,080,000	8,050,000	350,000	0	0	0	0	0	0	0	0	0	16,480,000	16
Total Water to System	101,277,000	101,755,000	108,231,000	108,180,000	156,150,000	282,644,000	319,661,000	279,923,000	144,129,000	120,874,000	101,059,000	101,854,000	1,925,737,000	1,926

2016	Total Monthly Production or Purchase (gallons)													
	January	February	March	April	May	June	July	August	September	October	November	December	Total	Total (MG)
Well Withdrawals														
Well 1R	0	0	0	9,290,000	19,510,000	19,330,000	22,450,000	22,110,000	6,650,000	0	0	0	99,340,000	99
Well 2.1	0	0	0	0	0	0	0	0	0	0	0	0	0	0
Well 2.2	0	0	0	0	470,000	19,750,000	21,330,000	21,870,000	19,010,000	12,020,000	0	0	94,450,000	94
Well 4R	0	20,000	1,850,000	0	0	23,090,000	50,790,000	61,520,000	31,380,000	23,130,000	19,510,000	22,810,000	234,100,000	234
Well 7	47,050,000	42,920,000	14,420,000	0	0	72,080,000	65,480,000	120,000	12,810,000	10,970,000	0	0	265,850,000	266
Well 8	0	0	0	0	0	0	19,530,000	96,270,000	32,620,000	0	0	0	148,420,000	148
Well 9	0	0	34,360,000	41,980,000	64,350,000	3,250,000	0	0	0	20,630,000	28,920,000	47,010,000	240,500,000	241
Well 10	0	0	0	0	0	0	5,440,000	22,820,000	20,110,000	17,440,000	19,290,000	0	85,100,000	85
Well 11.1	0	0	0	0	0	0	0	0	0	0	0	0	0	0
Well 11.2	23,640,000	22,630,000	21,270,000	40,690,000	45,350,000	28,590,000	6,990,000	10,140,000	1,580,000	0	0	0	200,880,000	201
Well 12	4,200,000	3,200,000	960,000	80,000	40,000	6,110,000	4,480,000	2,700,000	530,000	2,730,000	3,590,000	3,480,000	32,100,000	32
Well 13	0	10,000	2,740,000	4,920,000	6,560,000	2,250,000	5,640,000	10,230,000	6,460,000	1,720,000	0	100,000	40,630,000	41
Subtotal Wells	74,890,000	68,780,000	75,600,000	96,960,000	136,280,000	174,450,000	202,130,000	247,780,000	131,150,000	88,640,000	71,310,000	73,400,000	1,441,370,000	1,441
Purchased Water														
North	20,000	0	10,000	10,000	420,000	690,000	130,000	510,000	30,000	30,000	40,000	40,000	1,930,000	2
South	36,480,000	29,220,000	31,010,000	31,180,000	28,970,000	31,620,000	27,540,000	28,450,000	32,390,000	33,020,000	33,920,000	23,340,000	367,140,000	367
Subtotal Purchases	36,500,000	29,220,000	31,020,000	31,190,000	29,390,000	32,310,000	27,670,000	28,960,000	32,420,000	33,050,000	33,960,000	23,380,000	369,070,000	369
Total Water Production/Purchases	111,390,000	98,000,000	106,620,000	128,150,000	165,670,000	206,760,000	229,800,000	276,740,000	163,570,000	121,690,000	105,270,000	96,780,000	1,810,440,000	1,810
NESSWD Interties	(16,000)	(51,000)	5,000	(64,000)	83,000	(28,000)	(18,000)	(23,000)	43,000	33,000	(21,000)	4,000	(53,000)	(0)
Recharge	0	0	0	0	0	0	0	0	0	0	0	0	0	0
Total Water to System	111,374,000	97,949,000	106,625,000	128,086,000	165,753,000	206,732,000	229,782,000	276,717,000	163,613,000	121,723,000	105,249,000	96,784,000	1,810,387,000	1,810

This page intentionally left blank.

FILE

REC'D APR 22 2005

STATE OF WASHINGTON

DEPARTMENT OF ECOLOGY

Northwest Regional Office • 3190 160th Avenue SE • Bellevue, Washington 98008-5452 • (425) 649-7000

APR 21 2005

Sammamish Plateau Water and Sewer District
1510 228th Avenue SE
Sammamish WA 98075

Dear Sir or Madam:

Enclosed is Aquifer Storage and Recovery Permit No. R1-28191P. Our information indicates you have begun construction of your project. We are enclosing a Notice of Completion of Construction form which must be filed when all mainlines have been installed, storage facilities completed and the delivery system is in place.

If you cannot complete your project by October 1, 2015, you must contact this office.

Please read the enclosed information sheet as well as both sides of your permit.

If you have any questions, please contact Doug Wood at (425) 649-7077.

Sincerely,

Daniel L. Swenson
Section Supervisor
Water Resources Program

DLS:ng
Enclosures

NOTE: **PLEASE ADVISE OF ANY ADDRESS CHANGES**

STATE OF WASHINGTON
DEPARTMENT OF ECOLOGY

AQUIFER STORAGE AND RECOVERY CONDITIONAL PERMIT

TO STORE FOR BENEFICIAL USE
WATERS OF THE STATE OF WASHINGTON

PRIORITY DATE	APPLICATION NUMBER	PERMIT NUMBER	CERTIFICATE NUMBER
November 18, 2003	R1-28191A	R1-28191P	

NAME
Sammamish Plateau Water and Sewer District

ADDRESS (STREET)	(CITY)	(STATE)	(ZIP CODE)
1510 228th Avenue SE	Sammamish	Washington	98075

PUBLIC WATERS TO BE STORED AND BENEFICIALLY USED

SOURCE WATER RIGHT NUMBER(S)	MAXIUMUM INJECTION RATE (GPM)	MAXIMUM WITHDRAWAL RATE (GPM)	MAXIMUM ACRE FEET PER YEAR
G1-25428P G1-26014P S1-*04253P	1,400	1,400*	565**

* In addition to Qi currently allocated to designated ASR recovery wells (requires Ecology approval based on pilot study results)
** In addition to Qa currently allocated to designated ASR recovery wells (requires Ecology approval based on pilot study results)

PURPOSE OF USE	PERIOD OF RECHARGE	PERIOD OF RECOVERY
Municipal supply	November to April	June to October

LOCATION OF STORAGE AQUIFER

The Plateau Aquifer System (PAS) is located underlying the Sammamish Plateau area in east King County, Washington. The area encompasses approximately 29 square miles of East King County within Townships 24N and 25N, Ranges 6E and 7E.

LOCATION OF INJECTION WELLS

APPROXIMATE LOCATION OF EACH INJECTION WELL OR RECHARGE POND
The Table below summarizes the wells that will be used for injecting water for storage in the Plateau Aquifer System

Well	Location	Township, Range, Section	Completion Aquifer	Capacity (gpm)
1R	24100 SE 28th Street	T24N/R6E/Section 10, NW4/SE4/NE4	Zone II	500
2	25400 SE 31st Place	T24N/R6E/Section 11, SE4/NW4/NE4	Zone II	500
4	23050 Main Street	T25N/R6E/Section 34, NE4/NE4	Zone IV	TBD
5	23200 Main Street	T25N/R6E/Section 34	Zone IV	400
10	25025 SE 32nd Street	T24N/R6E/Section 11, NE4/SW4	Zone II	600
11.1	400 228th Avenue SE	T25N/R6E/Section 34, NE4/NW4	Zone III	300
11.2	400 228th Avenue SE	T25N/R6E/Section 34, NE4/NW4	Zone IV	TBD
15	4508 Klahanie Drive	T24N/R6E/Section 14, NW4/SE4	Zones II-IV	TBD
PT-12	26015 East Main Drive	T24N/R6E/Section 36	Zone IV	TBD
ZII Rc4	near Well 4	T25N/R6E/Section 34, NE4/NE4	Zone II	500
ZII Rc1	near Well 1	T24N/R6E/Section 10, NW4/SE4/NE4	Zone II	500

TBD - To be determined during pilot testing

LOCATION RECOVERY WELLS

APPROXIMATE LOCATION OF EACH RECOVERY WELL
The Table below summarizes the wells that will be used for recovering water stored in the Plateau Aquifer System

Well	Location	Township, Range, Section	Completion Aquifer	Capacity (gpm)
1R	24100 SE 28th Street	T24N/R6E/Section 10, NW4/SE4/NE4	Zone II	500
2R	25401 SE 31st Place	T24N/R6E/Section 11, SE4/NW4/NE4	Zone II	500
4R	23050 Main Street	T25N/R6E/Section 34, NE4/NE4	Zone IV	TBD
10	25025 SE 32nd Street	T24N/R6E/Section 11, NE4/SW4	Zone II	600
11.1	400 228th Avenue SE	T25N/R6E/Section 34, NE4/NW4	Zone III	500
11.2	400 228th Avenue SE	T25N/R6E/Section 34, NE4/NW4	Zone IV	2,000
15	4508 Klahanie Drive	T24N/R6E/Section 14, NW4/SE4	Zones II-IV	1,600
PT-12	26015 East Main Drive	T24N/R6E/Section 36	Zone IV	TBD
ZII Rc4	near Well 4	T25N/R6E/Section 34, NE4/NE4	Zone II	TBD
ZII Rc1	near Well 1	T24N/R6E/Section 10, NW4/SE4/NE4	Zone II	TBD

TBD - To be determined during pilot testing

LEGAL DESCRIPTION OF PROPERTY ON WHICH WATER IS TO BE USED

The Area Served by the Sammamish Plateau Water and Sewer District as per its Department of Health approved Water System Plan and periodic updates (see Figure 1).

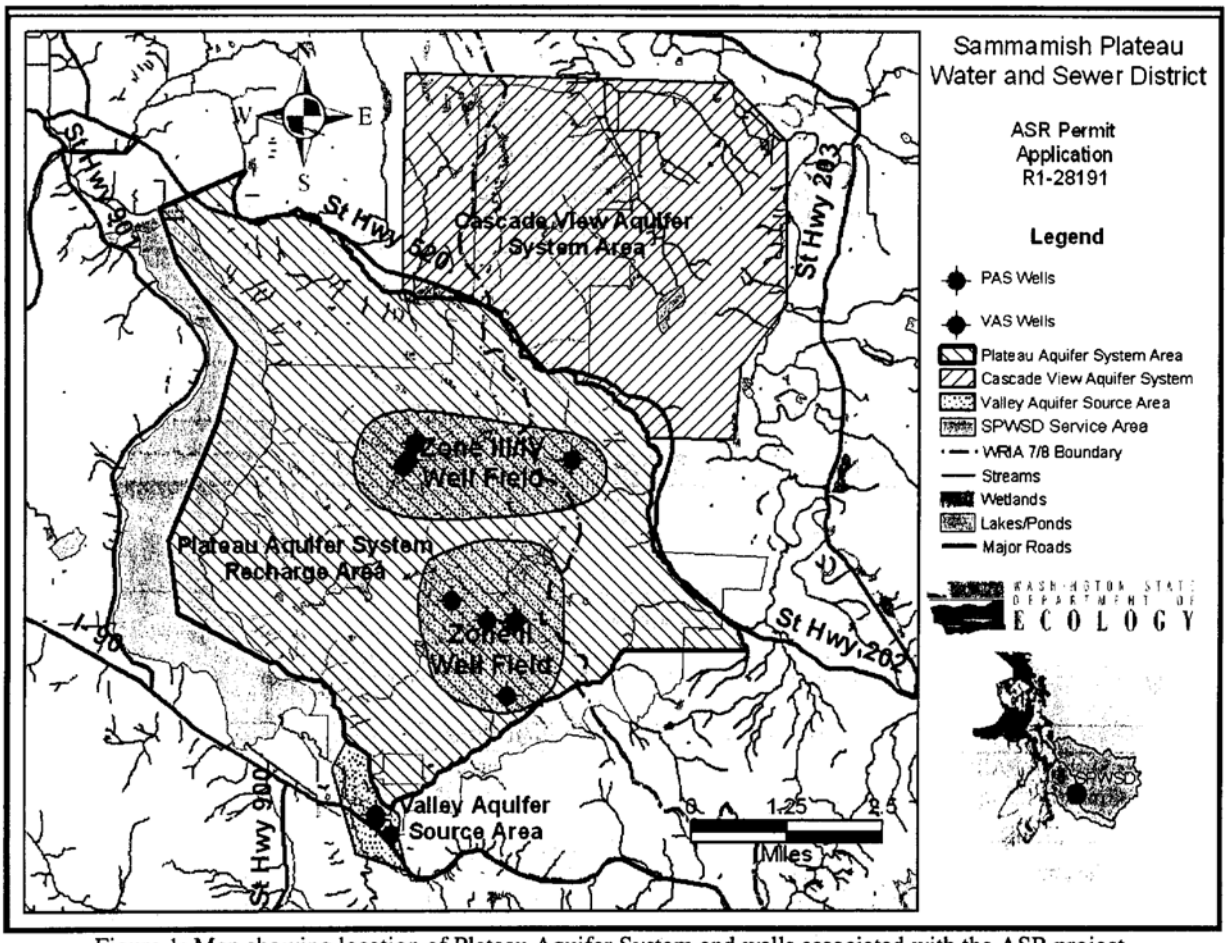

Figure 1: Map showing location of Plateau Aquifer System and wells associated with the ASR project.

DESCRIPTION OF ASR PROJECT

The Sammamish Plateau Water and Sewer District's Plateau Aquifer System (PAS) Aquifer Storage and Recovery Project (ASR) has been on-going since 1993. Pilot tests conducted in 1993, 1994, 1998, 2001, and 2002 have investigated the feasibility of recharge and recovery within three productive aquifer zones of the PAS.

This ASR Permit (R1-28191P) provides authorization to continue pilot testing until 2015 at which time the district can, based on pilot project results and Ecology approval, extend this permit for between 10 and 50 years.

This project will test recharge and recovery within the Zone II (Qva) and Zones III/IV (QAc/QBc) Aquifers underlying the Sammamish Plateau area east of Lake Sammamish in East King County, Washington.

Pilot studies authorized under this permit, depending on project results and upon Ecology approval, may enable the district to increase the quantities of water it recovers from aquifer storage beyond those quantities it currently is allocated through existing groundwater water rights assigned to wells completed in PAS aquifers.

(For a full project description see Attachment A.)

DEVELOPMENT SCHEDULE

BEGIN PROJECT BY THIS DATE:	COMPLETE PROJECT BY THIS DATE:	WATER PUT TO FULL USE BY THIS DATE:
Begun	October 1, 2015	October 1, 2055

PROVISIONS

The amount of water granted under this permit for Aquifer Storage and Recovery is a maximum limit that shall not be exceeded and the water user shall be entitled only to that amount of water within the specified limit that is beneficially used and required.

- The maximum quantity authorized for injection and storage within the Plateau Aquifer System shall not exceed 565 acre-feet.
    - During the recharge/recovery cycle under this permit, recovery wells shall not recover any amounts that exceed their existing certificated or permitted annual quantity that is independent of this ASR permit, unless otherwise approved by Ecology.

- If the potentiometric head for an aquifer zone (or water table where the aquifer is unconfined) being utilized for storage and recovery falls below the weekly twenty-year minimum level during the recovery stage of any recharge/recovery cycle, the district must cease recovery efforts until such time as the potentiometric or water table level recovers beyond the twenty year minimum level.
    - In the event that records are unavailable or inadequate to determine the twenty-year minimum level for an aquifer zone, the applicant, with Ecology approval, may establish an interim minimum value.
- Any increases to the storage quantity and/or injection/recovery rates beyond the maximum quantities herein approved, to add a new source, or to store water in another aquifer zone shall require the applicant to file a separate, new application for an Aquifer Storage and Recovery Permit.

The sources authorized for this project are groundwater from Wells 7, 8, and 9 and surface water from the City of Seattle Tolt reservoir, under water right permit numbers G1-25428P, G1-26014P and S1-*04253P (or certificates subsequently issued for these permits).

This permit authorizes the Sammamish Plateau Water and Sewer District to store water in Zones II, III and IV of the Plateau Aquifer System underlying the Sammamish Plateau area (see Figure 1).

This permit, unless otherwise cancelled by Ecology or by the applicant, shall remain in effect for a period of ten (10) years. The permit can be renewed for a further ten (10) years, or for a longer period not to exceed fifty (50) years, subject to review by Ecology of pilot project results at the conclusion of the first ten (10) year period.

The permit holder shall adhere to the operating, monitoring, and mitigation plans as provided herein and in Attachment A ("Comprehensive Report Addressing WAC 173-157 Requirements for Sammamish Plateau Water and Sewer District Plateau Aquifer System ASR Application for R1-28191A" – attached CD). In addition the permit holder shall, subject to Ecology approval, establish a spring and seep monitoring program for the plateau margin area to better assess the potential for slope stability impacts.

The applicant shall file a report with Ecology no later than December 30th of each year. The report shall provide data and interpretation of the previous season's operation and monitoring as well as plans for the subsequent recharge/recovery cycle.

Each annual report must provide an estimate of recoverable stored water for the recently completed recharge/recovery cycle and a forecast for the next year's cycle. This estimate, subject to Ecology approval, shall be used in planning the subsequent year's recovery quantities.

An approved measuring device shall be installed and maintained for each injection and recovery well in accordance with the rule "Requirements for Measuring and Reporting Water Use", Chapter 173-173 WAC and with Chapter 173-157 WAC. Water injection and recovery data shall be recorded daily and submitted annually to Ecology by January 31st of each calendar year.

Installation and maintenance of an access port as described in Ground Water Bulletin No. 1 is required. An air-line and gauge may be installed in addition to the access port.

If it can be shown that the project has a detrimental effect on existing rights or negative impacts to the environment or slope stability, it shall be the responsibility of the operator to mitigate for any impact and/or alter or cease operation of the ASR project as per the mitigation plan detailed in Section 7 of Attachment A.

The applicant is advised that a certificate of water right may not issue for this project and, if issued, can only be issued for that quantity of water that has been effectively stored and applied to actual beneficial use. Such quantity applied to actual beneficial use shall not exceed the quantity specified in this report of exam and will be calculated based on the best information available to Ecology, including metering data.

A certificate of water right shall not be issued until a final investigation is made.

This permit shall be subject to cancellation should the permittee fail to comply with the above development schedule and/or to give notice to the Department of Ecology on forms provided by that Department documenting such compliance.

Given under my hand and the seal of this office at Bellevue, Washington,

this 21st *day of* April, *2005.*

DEPARTMENT OF ECOLOGY WASHINGTON

ENGINEERING DATA
OK DA

Department of Ecology

by Daniel L. Swenson

Daniel L. Swenson, Section Supervisor, Water Resources

CDM

Comprehensive Report Addressing WAC 173-157 Requirements for Sammamish Plateau Water and Sewer District Plateau Aquifer System ASR Application (R1-28191A)

June 2, 2004

RECEIVED
JUN 14 2004
DEPT OF ECOLOGY

Prepared for:
Sammamish Plateau Water and Sewer District

Prepared by:
CDM
11811 NE 1st St, Suite 201
Bellevue, Washington 98005

CDM Project No. 19936.39300

This page intentionally left blank.

FILE

REC'D JUL 18 2005

STATE OF WASHINGTON

DEPARTMENT OF ECOLOGY

Northwest Regional Office • 3190 160th Avenue SE • Bellevue, Washington 98008-5452 • (425) 649-7000

JUL 14 2005

Sammamish Plateau Water and Sewer District
1510 228th Avenue SE
Sammamish WA 98075

Dear Sir or Madam:

Enclosed is Aquifer Storage and Recovery Water Permit No. R1-28192P and a form for filing a Notice of Beginning of Construction when the work is started. A permit authorizes the beginning of construction and use of the waters. The development schedule is the agreement between you and the State as to how and when the water right will be developed.

Failure to comply with the development schedule may result in cancellation of your permit.

Please read the enclosed information sheet as well as both sides of your permit to ensure that you have no questions as to what the State expects for the perfection of your water use. Thank you for your attention to this matter.

If you have any questions, please call Doug Wood at (425) 649-7077.

Sincerely,

Daniel L. Swenson
Section Supervisor
Water Resources Program

DLS:ng
Enclosures

NOTE: **PLEASE ADVISE OF ANY ADDRESS CHANGE**

STATE OF WASHINGTON
DEPARTMENT OF ECOLOGY

AQUIFER STORAGE AND RECOVERY PERMIT

TO STORE FOR BENEFICIAL USE
WATERS OF THE STATE OF WASHINGTON

PRIORITY DATE	APPLICATION NUMBER	PERMIT NUMBER	CERTIFICATE NUMBER
November 18, 2003	R1-28192A	R1-28192P	

NAME
Sammamish Plateau Water and Sewer District

ADDRESS (STREET)	(CITY)	(STATE)	(ZIP CODE)
1510 228th Avenue SE	Sammamish	Washington	98075

PUBLIC WATERS TO BE STORED AND BENEFICIALLY USED

SOURCE WATER RIGHT NUMBER(S)	MAXIUMUM INJECTION RATE (GPM)	MAXIMUM WITHDRAWAL RATE (GPM)	ACRE FEET PER YEAR STORAGE/RECOVERY
S1-*04253P	400	400*	200**

* Initial withdrawal rate limited to existing Qi associated with Wells 12/12R, 13, and 14. Additional recovery capacity (up to 400 gpm) may be approved based on pilot project results.

** Initial annual quantities shall add no additional amounts to existing Qa associated with Wells 12/12R, 13, and 14. Additional recovery of ASR storage may be added based on pilot project results.

PURPOSE OF USE	PERIOD OF RECHARGE	PERIOD OF RECOVERY
Municipal supply	November to April	June to October

LOCATION OF STORAGE AQUIFER

The Cascade View Aquifer System (CVAS) is located underlying the Union Hill Plateau area in east King County, Washington. The storage area at its maximum extent encompasses approximately 4,400 acres (6.85 square miles) of East King County within eastern half Township 25N, Range 6E and near the western edge of Township 25N, Range 7E, W.M. .

LOCATION OF INJECTION WELLS

APPROXIMATE LOCATION OF EACH INJECTION WELL OR RECHARGE POND
The Table below summarizes the wells that will be used for injecting water for storage in the Cascade View Aquifer System

Well	Location	Township/Range/Section	Completion Aquifer	Capacity (gpm)
Well 12	26410 NE 50th Street	T25N/R6E/Sec 13 SW4/SE4/NW4	Qva (Shallow)	TBD
Well 13	26002 NE 70th Street	T25N/R6E/Sec 12 SW4/SE4/NW4	Q(B)c (Deep)	TBD
Well 14	26120 NE 35th Place	T25N/R6E/Sec 24 SW4/SE4/NW4	Q(A)c (Intermediate)	TBD

TBD - To be determined during pilot testing

LOCATION RECOVERY WELLS

APPROXIMATE LOCATION OF EACH RECOVERY WELL
The Table below summarizes the wells that will be used for recovering water stored in the Cascade View Aquifer System

Well*	Location	Township/Range/Section	Completion Aquifer	Capacity (gpm)
Well 12R	26410 NE 50th Street	T25N/R6E/Sec 13 SW4/SE4/NW4	Qva (Shallow)	220
Well 13	26002 NE 70th Street	T25N/R6E/Sec 12 SW4/SE4/NW4	Q(B)c (Deep)	170
Well 14	26120 NE 35th Place	T25N/R6E/Sec 24 SW4/SE4/NW4	Q(A)c (Intermediate)	100

** Additional ASR recovery wells may be added based on Ecology review of the pilot project results.*

LEGAL DESCRIPTION OF PROPERTY ON WHICH WATER IS TO BE USED

The Area Served by the Sammamish Plateau Water and Sewer District as per its Department of Health approved Water System Plan and periodic updates.

DESCRIPTION OF ASR PROJECT

This permit is intended to provide the Sammamish Plateau Water and Sewer District (SPWSD) the opportunity to demonstrate whether ASR can reduce or eliminate declining groundwater levels within a portion of the Cascade View Aquifer System and test the effectiveness of the aquifer system to store groundwater injected during the winter months, and retain sufficient quantities of stored water for use during the summer and early fall months.

The pilot project will test ASR feasibility by utilizing existing SPWSD Wells 12/12R, 13 and 14 to inject up 200 acre-feet per year of surface and/or ground water between November and April for storage and utilize SPWSD Wells 12R, 13, and 14 for recovery of stored water from July to September of each year.

PROVISIONS

This Permit provides authorization to the Sammamish Plateau Water and Sewer District and its consultants to conduct pilot studies to determine the feasibility of Aquifer Storage and Recovery within the Cascade View Aquifer System located north of the Patterson Creek and Evans Creek valleys of WRIA 7 and 8, respectively.

All ASR testing and subsequent operations shall be conducted as provided in the "Comprehensive Report Addressing WAC 173-157 Requirements for the Sammamish Plateau Water and Sewer District Cascade View Aquifer System ASR Application (R1-28192A)" dated November 10, 2004, (included in the Report of Examination for R1-28192A as Attachment A, and referred to hereinafter in this document as the "Comprehensive Report"), and as amended or added to below.

- The amount of water granted for storage and recovery is a maximum limit that shall not be exceeded and the water user shall be entitled only to that amount of water within the specified limit that is beneficially used and required.
  - The maximum quantity allowed for injection and storage within the Plateau Aquifer System shall not exceed 200 acre-feet.
    - During the recharge/recovery cycle under this permit, recovery wells shall not recover any amounts that exceed their existing certificated or permitted annual quantity that is independent of this ASR permit, unless otherwise approved by Ecology.
    - Recovery wells under the proposed project shall not initially recover amounts greater than the amounts they are currently assigned through existing water right permits and certificates. The percentage of stored water that is recoverable under this permit may be adjusted annually, subject to Ecology approval, and shall be based on an analysis of the previous year's project results, including static and dynamic storage, and can include forecasts developed using the district's numerical groundwater model, but must also correlate with water level data.
  - The maximum pumping rate of recovery wells shall not exceed their existing certificated or permitted instantaneous quantity that is independent of this ASR permit, unless otherwise approved by Ecology.
    - The rate of recovery in recharge/recovery cycles may be increased, subject to Ecology approval, based upon annual recovery calculations that fully take into account recharge quantities injected and the timing and duration of recovery of stored groundwater, but may not at any time under this permit exceed 400 gallons per minute in excess of the quantities independently allocated to these wells under other certificates or permits.
- If the potentiometric head for an aquifer zone (or water table where the aquifer is unconfined) being utilized for storage and recovery falls below the weekly twenty-year minimum level during the recovery stage of any recharge/recovery cycle, the district must cease recovery efforts until such time as the potentiometric or water table level recovers beyond the twenty year minimum level.
  - In the event that records are unavailable or inadequate to determine the twenty-year minimum level for an aquifer zone, the applicant, with Ecology approval, may establish an interim minimum value.
- Any increases to the storage quantity and/or injection/recovery rates beyond the maximum quantities herein approved, to add a new source, or to store water in another aquifer zone shall require the applicant to file an application for a new ASR permit.
- The sources authorized for this project are groundwater from Wells 12/12R, 13, and 14 and surface water from the City of Seattle Tolt reservoir, under ground water certificates G1-00027C (Well 12/12R), G1-24363C (Well12/12R), G1-25963C (Well 13), G1-25831C (Well 14), and surface water permit S1-*04253P (or a certificate subsequently issued for this permit).
- This permit authorizes the Sammamish Plateau Water and Sewer District to store water in Shallow, Intermediate, and Deep Aquifer Zones of the Cascade View Aquifer System located north of Patterson and Evans Creeks (see description of these in The Comprehensive Report, Section 3).
- This permit, unless otherwise cancelled by Ecology or by the applicant, shall remain in effect for a period of ten (10) years. The permit can be renewed by Ecology for a further ten (10) years, or for a longer period not to exceed fifty (50) years, subject to review by Ecology of pilot project results at the conclusion of the first ten (10) year period.
- The applicant shall file a report with Ecology no later than December 30 of each year. The report shall provide data and interpretation of the previous season's operation and monitoring as well as plans for the subsequent recharge/recovery cycle.
- Each annual report must provide an estimate of recoverable stored water for the recently completed recharge/recovery cycle and a forecast for the next year's cycle. This estimate, subject to Ecology approval, shall be used in planning the subsequent year's quantities of recoverable storage (applies only to amounts that are independent of and additional to those quantities allocated to existing water rights held by the Sammamish Plateau Water and Sewer District in the project area).
- An approved measuring device shall be installed and maintained for each injection and recovery well in accordance with the rule "Requirements for Measuring and Reporting Water Use", Chapter 173-173 WAC and with Chapter 173-157 WAC. Water injection and recovery data shall be recorded daily and submitted annually to Ecology by January 31st of each calendar year.
- Installation and maintenance of an access port as described in Ground Water Bulletin No. 1 is required. An air-line and gauge may be installed in addition to the access port.
- If it can be shown that the project has a detrimental effect on existing rights or negative impacts to the environment or slope stability, it shall be the responsibility of the operator to mitigate for any impact and/or alter or cease operation of the ASR project as per the mitigation plan detailed in Section 7 of The Comprehensive Report.
- The applicant is advised that a certificate of water right may not issue for this project and, if issued, can only be issued for that quantity of water that has been effectively stored and applied to actual beneficial use. Such quantity applied to actual beneficial use shall not exceed the quantity specified in this report of exam and will be calculated based on the best information available to Ecology, including metering data.
- A certificate of water right shall not be issued until a final investigation is made.

IMPORTANT INFORMATION

REGARDING YOUR WATER RIGHT

1. This permit is not your final water right, but an authorization to proceed with construction and to use the water in accordance with the provisions and limitations of your permit. It should be understood that the diversion or withdrawal of water may be regulated to protect any existing or prior rights.

2. Accompanying your permit is a form for reporting the progress of the project. Failure to file this form with the Department at the appropriate time, or negligence in complying with the provisions of the permit, may result in its cancellation.

3. Actual construction work must begin, the project must be completed, and water must be put to full beneficial use on or before the time limits indicated on the Development Schedule on your permit.

4. A list of forms to be filed, according to your Development Schedule, is as follows:

    a. Notice of Beginning of Construction
    b. Notice of Completion of Construction
    c. Proof of Appropriation of Water
    d. Water Well Report (ground water permits only)

5. If you cannot begin the work, complete the work, or put the water to use before the expiration of time stated on your permit, you must request an extension of time stating the reasons why such an extension is needed. This request should be sent to the Department of Ecology. The statutory fee for an extension of time in which to begin construction is one-half the permit fee or $5, which ever is greater. The fee should accompany your request for extension. If the work has been started and an extension of time is needed to complete construction, or to completely apply the water to full beneficial use, a statutory fee of $5 is charged for each year such an extension is granted. Checks should be made payable to the Department of Ecology.

6. Should you sell the property covered by this permit before a final certificate of water right is issued, your interest should be assigned (transferred) to the new owner. By statute, a $5 fee is charged for recording such assignment. A form for this purpose will be provided on request.

7. When the water has been put to full beneficial use as described in the permit and necessary notices have been filed, a Certificate of Water Right will be issued subject to the conditions stated on your permit and actual use. The permittee pays the certificate recording fee of $5 (payable to the Department of Ecology) and a county auditor's recording fee, both of which are sent to this office. The certificate and auditor's check will be forwarded for recording, then mailed to you. The certificate gives final title to the water right granted and becomes appurtenant to the land described on the certificate as the place of use.

Appendix D

Intertie and Interagency Agreements

This page intentionally left blank.

AGREEMENT FOR INTERTIES AND 297 TANK LEASE

THIS AGREEMENT is made by and between the Sammamish Plateau Water and Sewer District, a municipal corporation, in King County, Washington ("District"), and the City of Issaquah, a municipal corporation, in King County, Washington ("City") for the purposes set forth herein.

SECTION I: RECITALS

1.1 District provides water service to the geographic area known as the Sammamish Plateau, King County, Washington. City provides water service to the City of Issaquah, King County, Washington. A portion of District's southern corporate boundary is located adjacent to City's corporate boundary.

1.2 District and City desire to obtain supplemental water supply for redundancy, fire flow augmentation and other emergency purposes. District and City are willing to allow interties between District and City water systems for such purposes subject to certain terms and conditions. District is further willing to provide City with an additional water by leasing water stored in a District water storage tank subject to certain terms and conditions.

1.3 District and City are authorized by RCW Chapter 39.34 to enter into interlocal agreements for joint action.

In consideration of the terms and conditions contained herein, the parties now agree as follows:

SECTION II: 1ST AVENUE N.E. INTERTIE

2.1 District and City agree to provide each other with an emergency standby source of water through an intertie connection between District and City water systems at the location described and depicted on Exhibit "A" attached hereto, commonly known as District's Corrosion Control Facility. This connection shall be an emergency standby connection, and water shall only be drawn through this point when an emergency occurs. An emergency shall be considered any event that requires District's or City's water supply to be augmented on a temporary emergent basis.

2.2 District or City shall notify the other party in writing at least three (3) business days in advance of the date either party desires to receive water through the intertie. In case of emergency need, District or City shall provide water immediately upon oral notification of such emergency. Follow-up written notice of such emergency request shall be made by District or City to the other party with five (5) days of the commencement of such use.

2.3 The intertie is constructed and owned by District. The intertie is capable of being place into operation at any time.

2.4 Water supplied by District and City through the intertie will be untreated.

2.5 District and City shall use reasonable efforts to provide an uninterrupted supply of water. Neither party shall be liable for any shortage or interruption in the delivery of water. In addition, neither party shall be liable for any failure, interruption, or shortage of water, or any loss or damage resulting therefrom occasioned by any cause beyond the control of either party. District and City do not guarantee the availability of water through the intertie at all times because of each parties' respective needs and water demand. Further, during critical water shortage periods as determined by either party, District or City may close the intertie until sufficient water supply exists to make such available for use by either party. In the event District or City declares and/or imposes water usage restrictions within their boundaries, District and City agree to adopt and impose water usage restrictions no less restrictive than those adopted by the other party as a pre-condition to receiving water through the intertie.

2.6 All water delivered under this agreement may only be resold to members/customers within the parties' respective water service boundary for use therein.

2.7 District shall measure all water delivered through the intertie by metering equipment owned by the District. District and City will monitor the water flow measurements. District shall own, operate, and maintain the intertie up to the City side of the intertie vault. City shall own, operate, and maintain any water line from the City side of the intertie vault to the City water system. District shall be responsible for the flushing of such intertie water line as reasonably necessary to ensure water quality.

2.8 Only District personnel shall operate the intertie valve. City shall notify District when there is a need for emergency intertie water supply; in such event, District's personnel shall operate the valves for opening and closing the intertie.

2.9 In the event that District or City receive water through the intertie, both parties agree to replenish or replace the same volume of water received and delivered from the intertie to the other party within seventy-two (72) hours of the time of receipt. In the event such water delivered is not replaced by the receiving party within such period, the party receiving such water shall pay the other party for such water delivered at the commercial commodity rate charged by the party delivering such water. The party delivering such water shall bill the party receiving such water monthly for the amount of water delivered. The party receiving such water shall pay the other party within sixty days (60) days of the date of such billing. Any billings not paid by the party within such sixty-day period, shall accrue interest at the rate of twelve percent (12%) per annum until paid.

SECTION III: S.E. 56TH STREET INTERTIE

3.1 District agrees to provide City an emergency standby source of water through an intertie connection between District and City water systems to be constructed at the location described and depicted on Exhibit "B" attached hereto. This connection shall be an emergency standby connection, and water shall only be drawn through the intertie when an emergency occurs. An emergency shall be considered any event that causes City's water pressure to drop below thirty (30) psi at the intertie location as a result of fire flow, water line failure, or reduced water supply.

3.2 City agrees to provide District an emergency standby source of water through an intertie connection between District and City water systems to be constructed at the location described and depicted on Exhibit "B" attached hereto. This connection shall be a manual bypass system which will allow City water to flow to District. Water shall only be drawn through the intertie when an emergency occurs. An emergency shall be considered any event that requires water supply to be augmented on a temporary emergent basis.

3.3 District shall notify City in writing at least three business (3) days in advance of the date District desires to receive water through the intertie. In case of emergency need, District or City shall provide water immediately. Follow-up written notice of such emergency need or request shall be made by District or City to the other party within five (5) days of the commencement of such use.

3.4 The intertie will be constructed, installed and owned by City in conjunction with the S.E. 56th Street improvements which are scheduled to be installed in 1993.

3.5 The intertie is primarily a one way intertie with treated water being supplied by District to City. However, in the event that District receives water from City through the intertie, any water provided by City to District will be untreated.

3.6 District and City shall use reasonable efforts to provide an uninterrupted supply of water. Neither party shall be liable for any shortage or interruption in the delivery of water. In addition, neither party shall be liable for any failure, interruption, or shortage of water, or any loss or damage resulting therefrom occasioned by any cause beyond the control of either party. District and City do not guarantee the availability of water through the intertie at all times because of each parties' respective needs and water demand. Further, during critical water shortage periods as determined by either party, District or City may close the intertie until sufficient water supply exists to make such available for use by either party. In the event District or City declares and/or imposes water usage restrictions within their boundaries, District and City agree to adopt and impose water usage restrictions no less restrictive than those adopted by the other party as a pre-condition to receiving water through the intertie.

3.7 All water delivered under this agreement may only be resold to members/customers within the parties' respective water service boundary for use therein.

3.8 City shall measure all water delivered through this intertie by metering equipment owned by City. District and City will monitor the water flow measurements. City shall own, operate, and maintain the intertie up to the District side of the intertie vault. District shall own, operate, and maintain any water line from the District side of the intertie vault to the District water system. City shall be responsible for the flushing of such intertie water line as reasonably necessary to ensure water quality.

3.9 Only City personnel shall operate the intertie valve. District shall notify City when there is a need for emergency intertie water supply; in such event, City personnel shall operate the valves for opening and closing the intertie.

3.10 In the event that District or City receive water through the intertie, both parties agree to replenish or replace the same volume of water received and delivered from the intertie to the other party within seventy-two (72) hours of the time of receipt. In the event such water delivered is not replaced by the receiving party within such period, the party receiving such water shall pay the other party for such water delivered at the commercial commodity rate charged by the party delivering such water. The party delivering such water shall bill the party receiving such water monthly for the amount of water delivered. The party receiving such water shall pay the other party within sixty days (60) days of the date of such billing. Any billings not paid by the party within such sixty-day period, shall accrue interest at the rate of twelve percent (12%) per annum until paid.

SECTION IV: 297 TANK LEASE

4.1 District agrees to provide City an additional emergency standby source of water by leasing to City water stored in a District water tank, commonly referred to as the 297 Tank, at the location described and depicted on Exhibit "C" attached hereto. This water source shall be an emergency standby reserve, and water shall only be drawn from the 297 Tank when an emergency occurs. An emergency shall be considered any event that causes City's water pressure to drop below thirty (30) psi at the S.E. 56th Street intertie location as a result of fire flow, water line failure, or reduced water supply.

4.2 The total storage capacity of the 297 Tank is 2.25 million gallons. District agrees to lease to City up to one half (1/2) of the total tank storage capacity, or up to 1.125 million gallons of water. If the 297 Tank is filled to capacity at the time City requests water from District, City shall be entitled to receive up to 1.125 million gallons of water. In the event the 297 Tank is not filled to its maximum capacity at the time City requests water from District, City shall only be entitled to receive water in the amount of one half (1/2) of the 297 Tank's capacity at the time of City's request; provided, however, in the event of a fire flow emergency, such limitation shall not apply.

4.3 All water provided by District to City from the 297 Tank will be treated.

4.4 City shall notify District in writing at least three (3) business days in advance of the date City desires to receive water from District's 297 Tank. In case of emergent fire flow need by City, District shall provide water immediately. Follow-up written notice of such emergency use shall be made by City to District within five (5) days of the commencement of such use.

4.5 Because any water delivered by District to City from the 297 Tank shall be transferred to the City through the intertie(s) referenced in Sections II and III herein, City's obligation to replace or pay for such water shall be governed by Paragraphs 2.9 and 3.10 herein.

4.6 In addition to payment for water used pursuant to Paragraph 4.5 above, City shall pay District $2,047 per month for fire protection use (fire protection use rate) of the 297 Tank, regardless of the amount of water used by City per month. The fire protection use rate, or as such may be adjusted as provided herein, shall be paid by City to District annually, the first such cumulative payment being due and payable one year from the effective date of this agreement. Any lease rate due and owing District not paid by City within 45 days of such date and successive annual payment dates thereafter shall accrue interest at the rate of 12 percent (12%) per annum until paid; further, in addition to all other legal rights and remedies District may have in the event of City's nonpayment, in the event of City's failure to make such payment within forty-five (45) days of notice from District of such nonpayment, District may thereafter terminate the lease immediately upon 45 days written notice of such termination.

The fire protection use rate set forth herein shall be automatically adjusted every three years, such three-year period commencing from the effective date of this agreement based on the "all urban" consumer price index for the Seattle/Tacoma area (CPI rate); provided that such CPI rate shall be compounded annually to determine the CPI rate adjustment every three years. The base CPI for the purposes of this Agreement shall be the CPI index as published by the U.S. Department of Labor for the "all urban" consumer price index for the Seattle/Tacoma area for the month of January 1994. Provided, however, that in the event the CPI rate increases in an amount greater than 10 percent (10%) in any year, the fire protection use rate set forth herein or as such rate may be adjusted as provided herein, shall be automatically adjusted based on such CPI rate effective for the following year. In such case, a new three-year period for the purposes of adjusting the fire protection use rate shall commence upon the effective date of such new CPI rate.

4.7 The term of the 297 Tank lease shall commence upon the effective date of this Agreement and shall continue for a period of 25 years, provided, however, either may cancel and terminate the tank leasehold upon giving two years advance written notice to the other party.

4.8 District shall use reasonable efforts to provide an uninterrupted supply of water from the 297 Tank. District shall not be liable for any shortage or interruption in the delivery of water. In addition, District shall not be liable for any failure, interruption, or shortage of water, or any loss or damage resulting therefrom occasioned by any cause beyond

the control of District. District does not guarantee the availability of water from the 297 Tank at all times because of District's needs and water demand. Further, during critical water shortage periods as determined by District, District may suspend the delivery of water from the 297 Tank until sufficient water supply exists to make such available for use by City.

4.9 All water purchased and delivered to City under this agreement may only be resold to members/customers within City's water service boundary for use therein.

SECTION V: GENERAL PROVISIONS

5.1 Each party shall approve the terms and conditions herein by appropriate resolution or ordinance and provide the other party with a certified copy of same. Each party represents to the other that it has the full power and authority to enter into this Agreement.

5.2 In the event that either party commences any legal action relating to the provisions of this Agreement, the prevailing party shall be entitled, in addition to all other amounts to which it is otherwise entitled in this Agreement, to all costs of litigation, including but not limited to, costs, expert witness and reasonable attorney's fees, including all such costs and fees incurred on appeal.

5.3 District and City agree to hold harmless and indemnify the other party and its employees and agents from any and all claims, damages, costs, and other liabilities caused by the parties' sole negligence or the parties' concurrent negligence, but only to the extent of the parties concurrent negligence, and arising by reason of participation in connection with, or relating to, the performance of this Agreement. In addition, District and City agree to defend, indemnify, and hold the other party harmless from any and all claims, damages, costs, and other liabilities arising out of any use by District or City or its customers receiving or to have received water through the interties or 297 Tank, including emergency use for fire purposes and normal domestic use by any District or City customers which relate in any way to water supplied under this Agreement.

5.4 This Agreement shall be binding upon and inure to the benefit of the parties hereto and their respective successors and assigns.

5.5 Any notice to be given or any documents to be delivered by any party to any other shall be delivered in person or by certified mail and addressed to District or City at the following addresses:

To District at: District Manager
1510 220th Avenue S.E.
Issaquah, WA 98027

With a courtesy copy to:

John Milne
Inslee, Best, Doezie & Ryder, P.S.
Security Pacific Plaza
777 108th Avenue N.E., Suite 1900
Bellevue, WA 98009-9016

To City at:

Mayor, City of Issaquah
P. O. Box 1307
Issaquah, WA 98027-1307

With a courtesy copy to:

Wayne Tanaka
Ogden, Murphy & Wallace
2100 Westlake Center Tower
1601 Fifth Avenue
Seattle, WA 98101-1686

5.6 No waiver by either party of any term or condition of this Agreement shall be deemed or construed as a waiver of any other term or condition, nor shall a waiver of any subsequent breach, whether of the same or of a different provision of this Agreement.

5.7 If any paragraph or provision of this Agreement is held to be invalid, the remainder of the Agreement shall not be affected, and shall remain in force and effect.

5.8 This Agreement shall take effect ("effective date") upon the ratification of this Agreement by both the District Board of Commissioners and the City Council of City.

5.9 This Agreement constitutes the entire agreement between the parties with respect to the subject matter hereof and may be modified only by an agreement in writing signed by both parties.

5.10 Each party agrees to comply with all federal, state, and local regulations in the operation of its water system connected to the interties and 297 Tank which is the subject of this Agreement.

Approved as to Form

District Legal Counsel

By John W Milne
Its General Counsel
Dated May 16, 1994

SAMMAMISH PLATEAU WATER AND SEWER DISTRICT ("District")

By Gifford W Muller
Its President
Dated ~~[illegible]~~ May 16, 1994

Office of the City Attorney

By [signature]
Its City Attorney
Dated 5-20-94

CITY OF ISSAQUAH ("City")

By [signature]
Its Mayor
Dated 5-23-94

STATE OF WASHINGTON)
) ss.
COUNTY OF KING)

I certify that I know or have satisfactory evidence that Gifford W. Miller is the person who appeared before me, and said person acknowledged that he signed this instrument, on oath stated that he was authorized to execute the instrument and acknowledged it as the Commissioner of Sammamish Plateau Water and Sewer District, a municipal corporation, to be the free and voluntary act of such municipal corporation for the uses and purposes mentioned in the instrument.

ANGELA M BARTON
Notary Public
STATE OF WASHINGTON
My Commission Expires
July 20, 1994

Dated May 16, 1994

[signature]
Notary Public in and for the State
of Washington, residing at Maple Valley
My Appointment Expires 7-20-94

STATE OF WASHINGTON)
) ss.
COUNTY OF KING)

I certify that I know or have satisfactory evidence that _____ is the person who appeared before me, and said person acknowledged that he signed this instrument, on oath stated that he was authorized to execute the instrument and acknowledged it as the _____ of the City of Issaquah, a municipal corporation, to be the free and voluntary act of such municipal corporation for the uses and purposes mentioned in the instrument.

Dated_____

_____
Notary Public in and for the State
of Washington, residing at _____
My Appointment Expires _____

EXHIBIT "A"

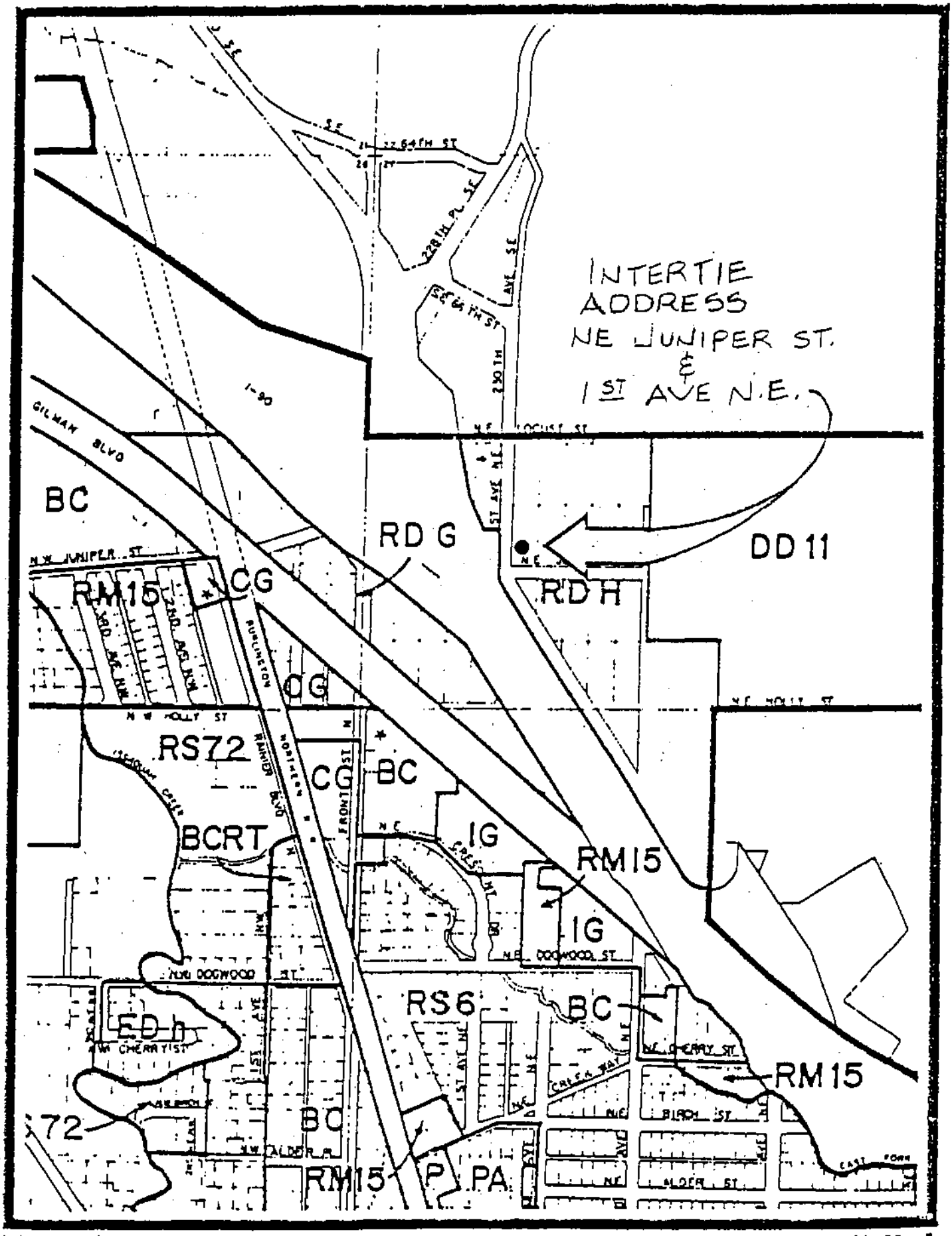

Exhibit J

CAD CONTROL DATE: 13:59:55 20-Apr-1994 PLOT CONTROL: PR-1994 12:38 stapp
16F94230.DGV

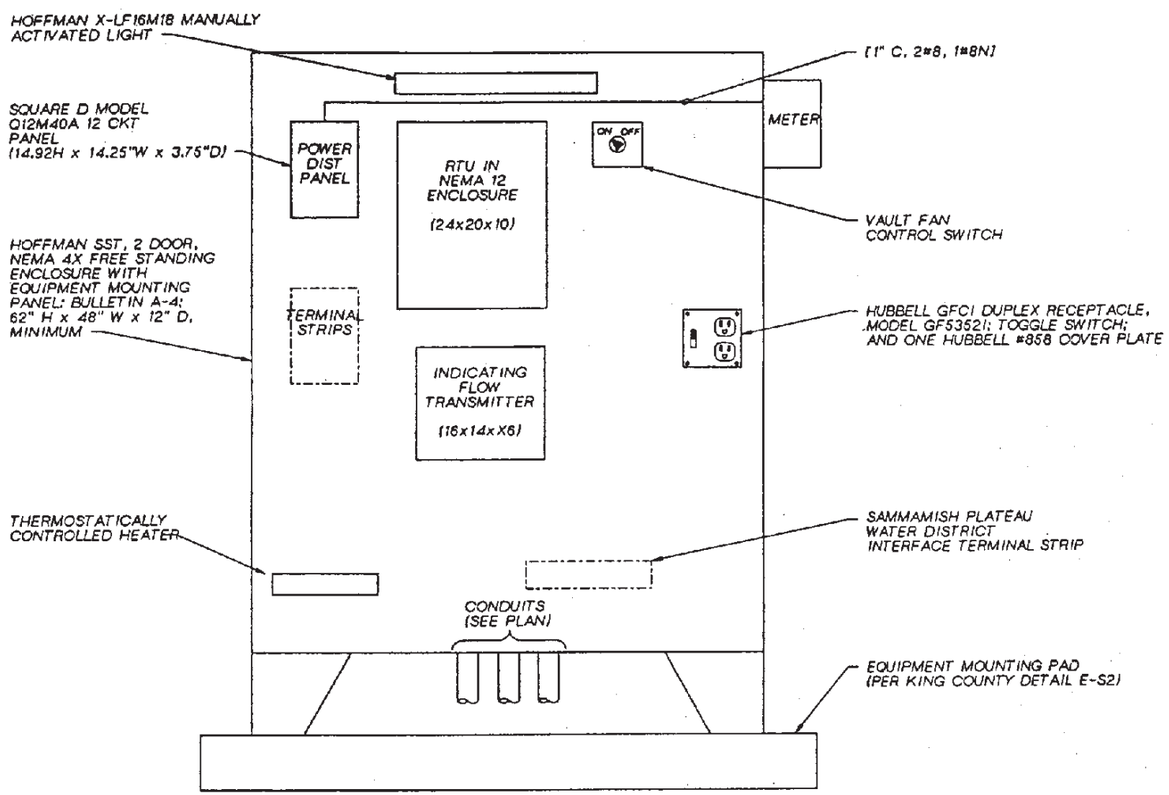

RTU ENCLOSURE

NTS (AT METER VAULT, SEE DWG. D20)

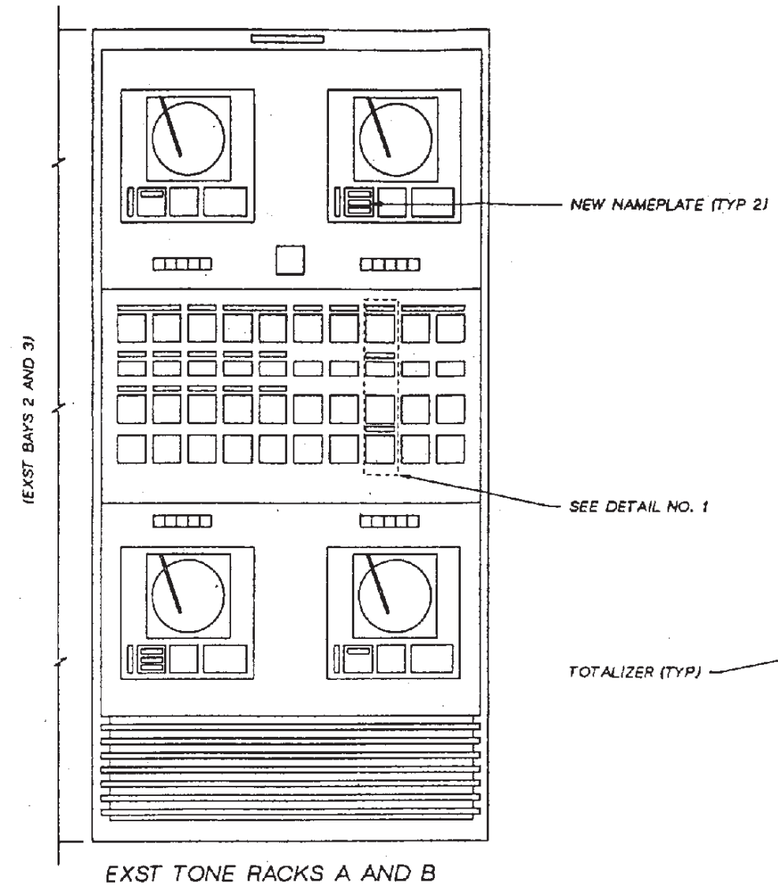

NOTE:
REFER TO SECTION "ELECTRICAL AND INSTRUMENTATION & CONTROLS" SPECIFICATIONS FOR ADDITIONAL REQUIREMENTS FOR WORK IN THE FLOW METER VAULT, AND FLOW METER CONFIGURATION/SETUP.

HEADQUARTERS CONTROL PANEL MODIFICATIONS

NTS

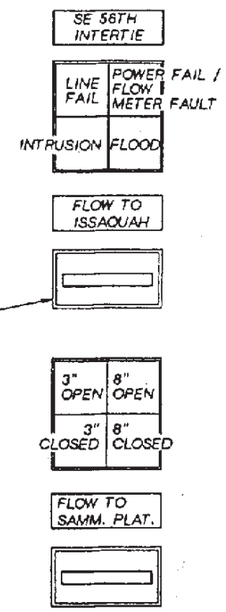

DETAIL 1

NTS

DSGN R GEIST						
DR MAXEY-SUHR						
CHK V ERICKSON						
APVD C SUNDBERG	NO	DATE	REVISION	BY	APVD	

CH2M HILL

REUSE OF DOCUMENTS
THIS DOCUMENT, AND THE IDEAS AND DESIGNS INCORPORATED HEREIN, AS AN INSTRUMENT OF PROFESSIONAL SERVICE, IS THE PROPERTY OF CH2M HILL AND IS NOT TO BE USED, IN WHOLE OR IN PART, FOR ANY OTHER PROJECT WITHOUT THE WRITTEN AUTHORIZATION OF CH2M HILL.
©CH2M HILL

VERIFY SCALE
BAR IS ONE INCH ON ORIGINAL DRAWING.
IF NOT ONE INCH ON THIS SHEET, ADJUST SCALES ACCORDINGLY.

CITY OF ISSAQUAH
PUBLIC WORKS DEPARTMENT
S.E. 56TH ST ROADWAY AND BRIDGE IMPROVEMENTS

F.A. NO. BRM-2004(019)

STAGE TWO-B
PANEL ELEVATIONS

SHEET
DWG NO. D21
DATE APRIL 94
PROJ NO. SEA26949.PK

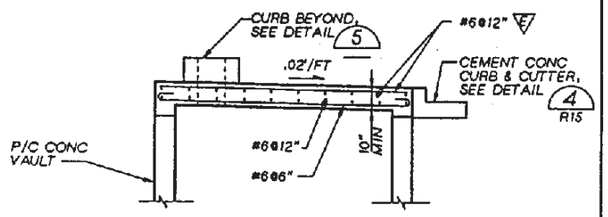

SECTION A
3/8"=1'-0" D18

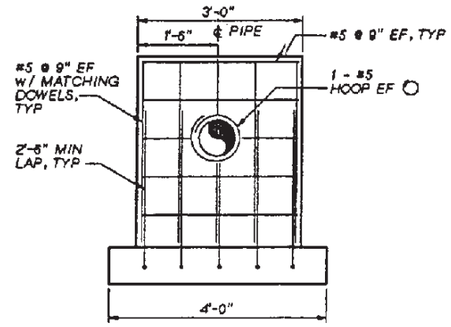

THRUST WALL 2
NTS D18

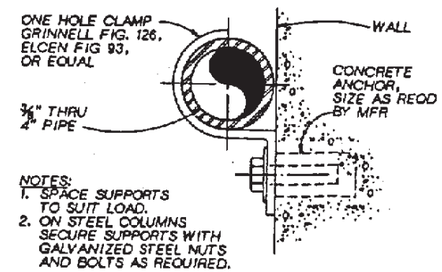

NOTES:
1. SPACE SUPPORTS TO SUIT LOAD.
2. ON STEEL COLUMNS SECURE SUPPORTS WITH GALVANIZED STEEL NUTS AND BOLTS AS REQUIRED.

PIPE SUPPORT 4
NTS D18

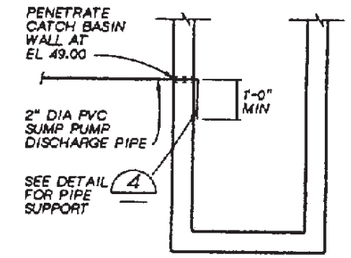

CATCH BASIN 101+64, 35' RT

SUMP PUMP DISCHARGE 6
NTS D18

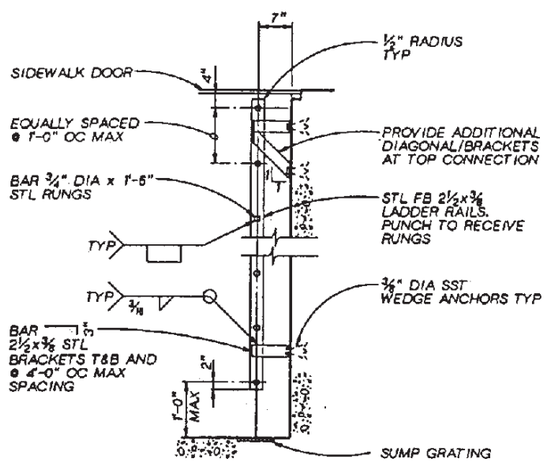

NOTES:
1. HOT DIP GALVANIZE STEEL AFTER FABRICATION.
2. PROVIDE LADDER UP SAFETY POST AT TOP OF LADDER AS MANUFACTURED BY BILCO CO., NEW HAVEN, CT.
3. WEDGE ANCHORS SHALL BE RED HEAD TRUBOLT, HILTI KWIK BOLT II, OR MOLLY PARABOLT.

DETAIL 1
NTS D18

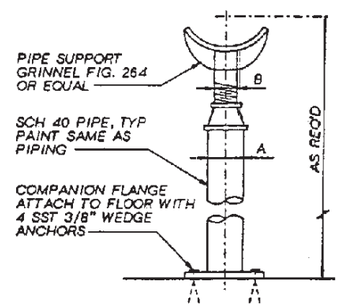

PIPE DIAM	A	B
3"	2 1/2"	1 1/2"
8"	3"	2 1/2"

PIPE SUPPORT 3
NTS D18

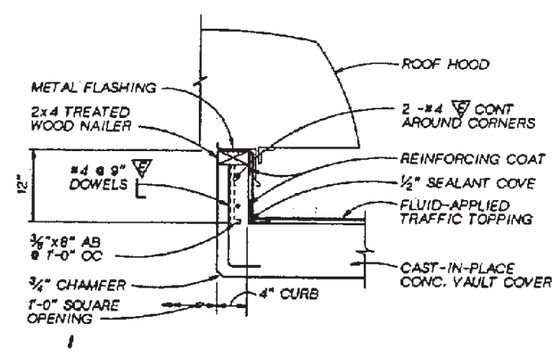

MECHANICAL CURB DETAIL 5
1 1/2"=1'-0"

DSGN M MOORE					
DR D. STAPP					
CHK R. BEIELER					
APVD C. SUNDBERG	NO.	DATE	REVISION	BY	APVD

REUSE OF DOCUMENTS
THIS DOCUMENT, AND THE IDEAS AND DESIGNS INCORPORATED HEREIN, AS AN INSTRUMENT OF PROFESSIONAL SERVICE, IS THE PROPERTY OF CH2M HILL AND IS NOT TO BE USED, IN WHOLE OR IN PART, FOR ANY OTHER PROJECT WITHOUT THE WRITTEN AUTHORIZATION OF CH2M HILL.
©CH2M HILL

VERIFY SCALE
BAR IS ONE INCH ON ORIGINAL DRAWING.
0 1"
IF NOT ONE INCH ON THIS SHEET, ADJUST SCALES ACCORDINGLY.

CITY OF ISSAQUAH
PUBLIC WORKS DEPARTMENT
S.E. 56TH ST ROADWAY AND BRIDGE IMPROVEMENTS

F.A. NO. BRM-2004(019)
STAGE TWO-B

METER VAULT DETAILS

SHEET 27
DWG NO. D19
DATE APRIL 94
PROJ NO. SEA28949.PK

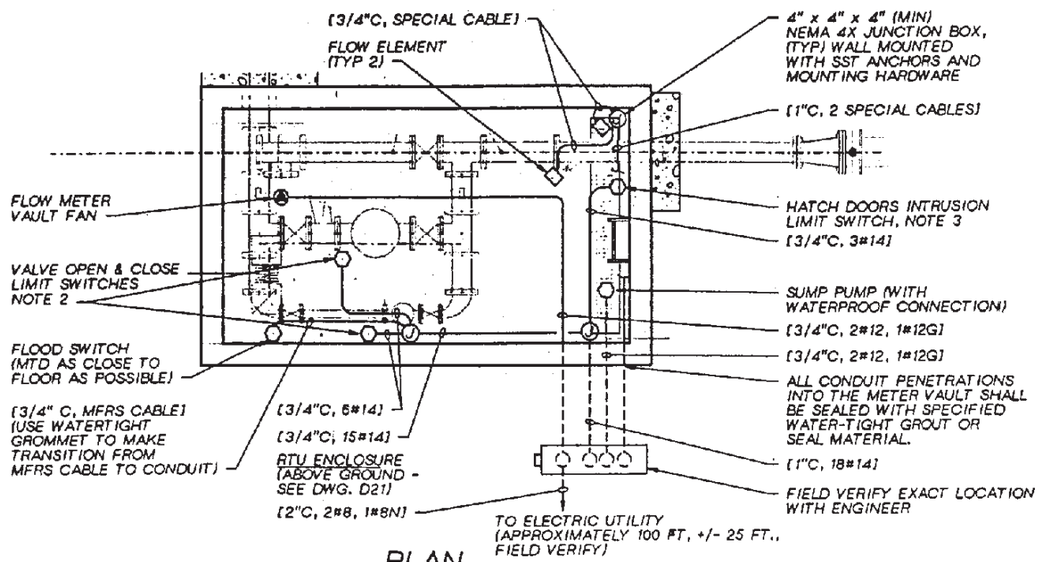

PLAN

3/8"=1'-0"

NOTES:

1. ALL CONDUIT SHALL BE RIGID GALVANIZED STEEL. USE LIQUIDTITE FLEX CONDUIT FOR LAST 12" LENGTH TO FIELD DEVICE. INSTALL CONDUIT SUCH THAT IT SLOPES AWAY FROM FIELD DEVICE. INSTALL WEEP HOLE TO ALLOW CONDENSATE, ETC. TO DRAIN FROM CONDUIT.
2. FURNISH NEMA 4X, WATER-PROOF, JUNCTION BOXES AS REQUIRED FOR WIRING IN METER VAULT.
3. MOUNT RTU ENCLOSURE DOOR AND HATCH DOORS INTRUSION LIMIT SWITCH UNIT, AND INSTALL WIRING SUCH THAT ALARM CONTACTS WILL OPEN WHEN EITHER DOOR IS OPENED.
4. CONDUITS AND RACEWAYS SHALL BE INSTALLED SUCH THAT HATCH ACCESS IS NOT IMPEDED IN ANY WAY.
5. GROUND ALL EQUIPMENT PER THE NEC AND PER MANUFACTURER'S REQUIREMENTS.
6. WIRE 4-20mA FLOW SIGNALS AND VALVE "CLOSED" LIMIT SWITCHES TO SAMMAMISH PLATEAU WATER AND SEWER DISTRICT INTERFACE TERMINAL BLOCK.
7. REFER TO SPECIFICATION "ELECTRICAL AND INSTRUMENTATION AND CONTROLS" FOR ADDITIONAL REQUIREMENTS.

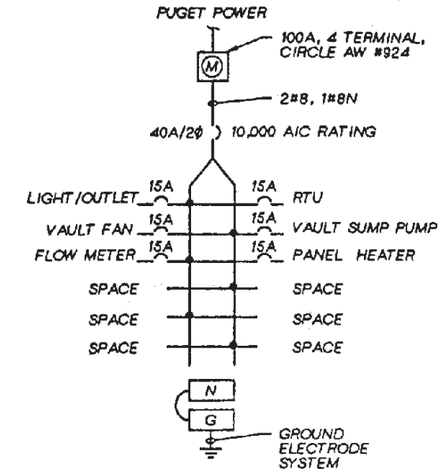

POWER DISTRIBUTION DETAIL

NTS

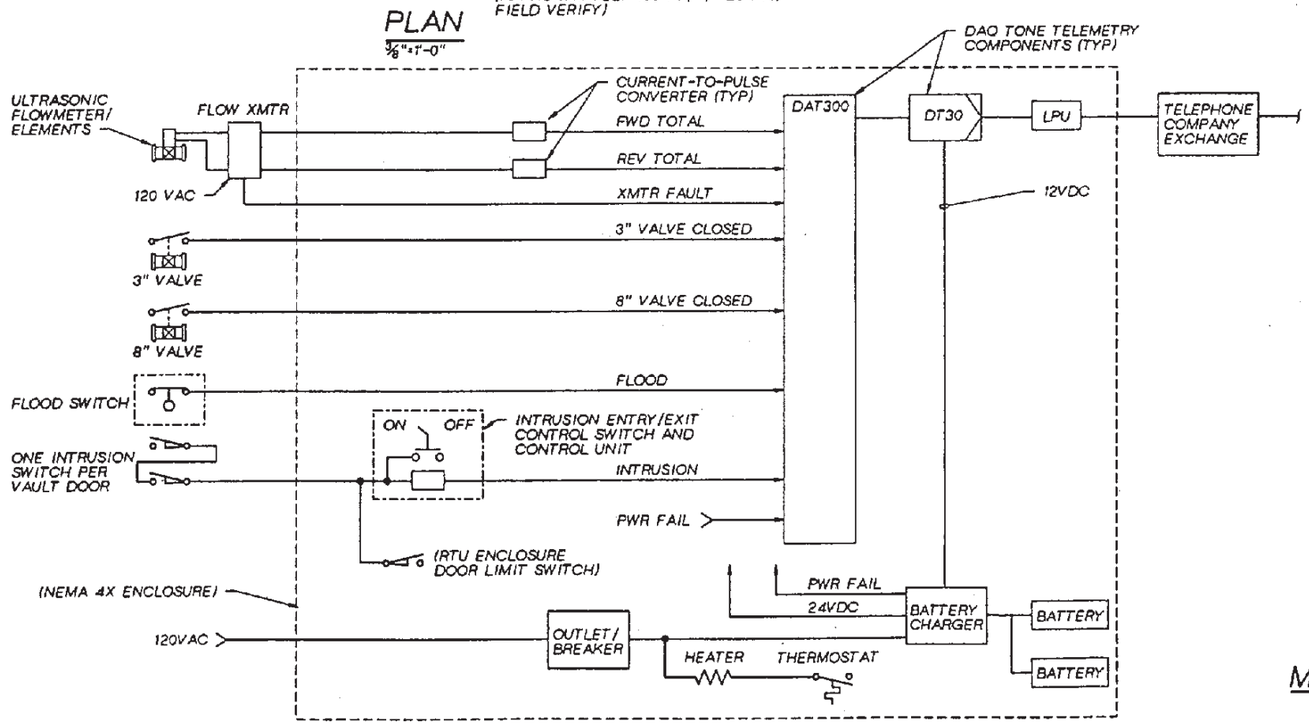

FLOW METER VAULT RTU (NEW)

NTS

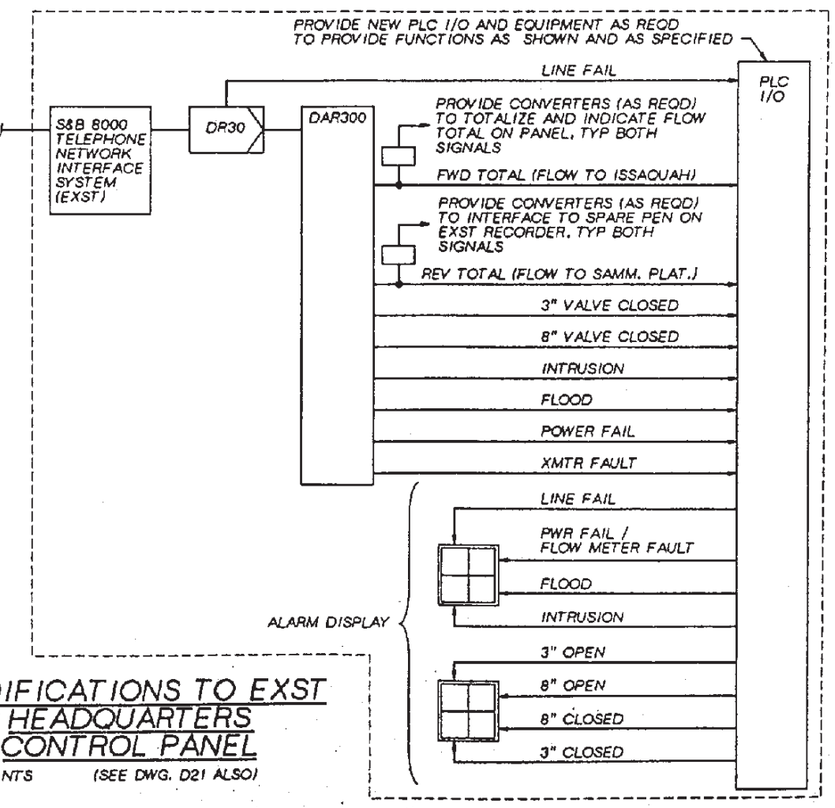

MODIFICATIONS TO EXST HEADQUARTERS CONTROL PANEL

NTS (SEE DWG. D21 ALSO)

DSGN R GEIST						
DR MAXEY-SUHR						
CHK V ERICKSON						
APVD C SUNOBERG	NO.	DATE	REVISION	BY	APVD	

CH2M HILL

REUSE OF DOCUMENTS
THIS DOCUMENT, AND THE IDEAS AND DESIGNS INCORPORATED HEREIN, AS AN INSTRUMENT OF PROFESSIONAL SERVICE, IS THE PROPERTY OF CH2M HILL AND IS NOT TO BE USED, IN WHOLE OR IN PART, FOR ANY OTHER PROJECT WITHOUT THE WRITTEN AUTHORIZATION OF CH2M HILL.
©CH2M HILL

VERIFY SCALE
BAR IS ONE INCH ON ORIGINAL DRAWING.
0 1"
IF NOT ONE INCH ON THIS SHEET, ADJUST SCALES ACCORDINGLY.

CITY OF ISSAQUAH
PUBLIC WORKS DEPARTMENT
S.E. 56TH ST ROADWAY AND BRIDGE IMPROVEMENTS

F.A. NO. BRM-2004(019)

STAGE TWO-B
METER VAULT INSTRUMENTATION

SHEET
DWG NO.
DATE APRIL
PROJ NO. SEA289

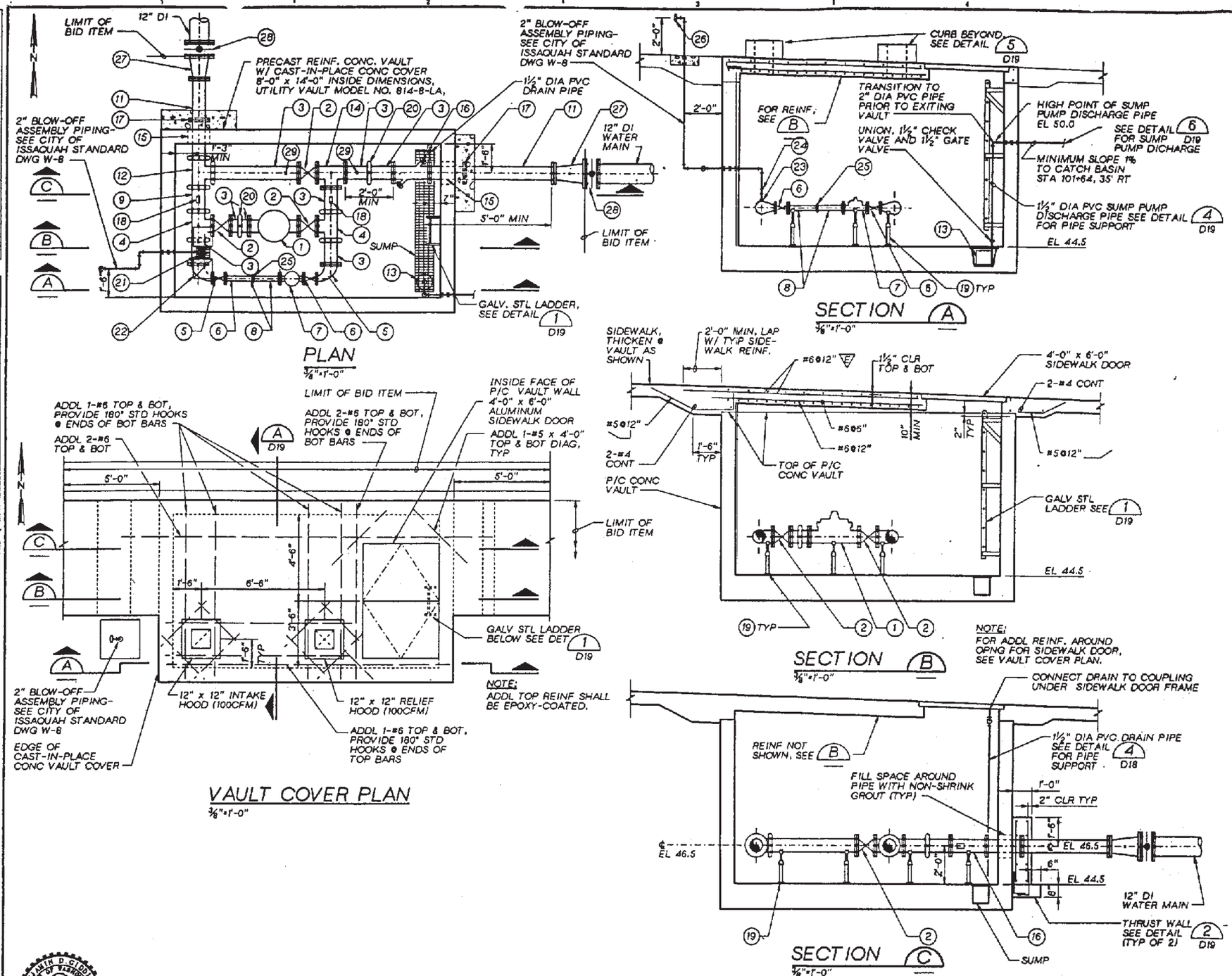

1. 8" PRESSURE REDUCING VALVE, FLG, 250 PSI (CLAYTON MODEL 92G-01ABCDKC WITH X105L2W MICRO SW)
2. 8" GATE VALVE - FLG, 200 PSI
3. 8" PIPE - FLG x GROOVED END
4. 8" TEE - GROOVED END x GROOVED END x FLG
5. 3" x 8" REDUCING 90° BEND, FLG
6. 3" GATE VALVE- FLG, 200 PSI
7. 3" PRESSURE REDUCING VALVE, FLG, 250 PSI (CLAYTON MODEL 92G-01ABSDKC WITH X105L2W MICRO SW)
8. 3" PIPE - FLG x GROOVED END
9. 8" PIPE - GROOVED END
10. NOT USED
11. 8" PIPE - FLG
12. 8" TEE - GROOVED END
13. SUMP PUMP, PACO PIP700a OR EQUAL. PUMP SHALL BE SMALL ENOUGH TO FIT IN SUMP WITH GRATING IN PLACE.
14. 8" TEE, FLG
15. 8" PIPE, FLG
16. 8" SONIC METER - FLG
17. FLANGED JOINT FOR THRUST RING
18. PRESSURE GAUGE - 2½" LIQUID FILLED BRASS FITTED 0-200 psi GAUGE, SPAN INSTURMENTS MODEL LFS220 OR EQUAL. EQUIPPED WITH ¼ TURN BRASS PETCOCK.
19. ADJUSTABLE PIPE SUPPORT - TYPICAL F & M FIGURE 2915, GRINNEL FIGURE 264 OR EQUAL, SEE DETAIL 3 D19
20. 8" GROOVED END COUPLING
21. SUPPLY FAN
22. 9"x8" DUCT FROM INTAKE HOOD TO SUPPLY FAN CONNECT TO SUPPLY FAN WITH FLEXIBLE CONNECTION
23. ROMAC 202BS SADDLE OR EQUAL WITH 2" BRASS NIPPLE
24. 2" GATE VALVE-THD x THD, 200 PSI
25. 3" GROOVED END COUPLING
26. 2½" (NST) FIRE THREAD ADAPTER WITH CAP
27. 8" x 12" REDUCER- FLG x FLG
28. 12" FLG BUTTERFLY VALVE
29. ¾" THRED-O-LET, ¾" BALL VALVE, AND ¾" NIPPLE

NOTE:
ALL PIPING SHALL BE DUCTILE IRON CLASS 53 UNLESS SHOWN OTHERWISE.

DSGN	B GIDDINGS					
DR	K MAY					
CHK	R BEIELER					
APVD	C SUNDBERG	NO.	DATE	REVISION	BY	APVD

EXPIRES 7/2/

CH2M HILL

REUSE OF DOCUMENTS
THIS DOCUMENT, AND THE IDEAS AND DESIGNS INCORPORATED HEREIN, AS AN INSTRUMENT OF PROFESSIONAL SERVICE, IS THE PROPERTY OF CH2M HILL AND IS NOT TO BE USED, IN WHOLE OR IN PART, FOR ANY OTHER PROJECT WITHOUT THE WRITTEN AUTHORIZATION OF CH2M HILL.
©CH2M HILL

VERIFY SCALE
BAR IS ONE INCH ON ORIGINAL DRAWING.
0 1"
IF NOT ONE INCH ON THIS SHEET, ADJUST SCALES ACCORDINGLY.

CITY OF ISSAQUAH
PUBLIC WORKS DEPARTMENT
S.E. 56TH ST ROADWAY AND BRIDGE IMPROVEMENTS

F.A. NO. BRM-2004(019)
STAGE TWO-B
ISSAQUAH METER VAULT

SHEET
DWG NO. D
DATE APRIL 94
PROJ NO. SEA26949

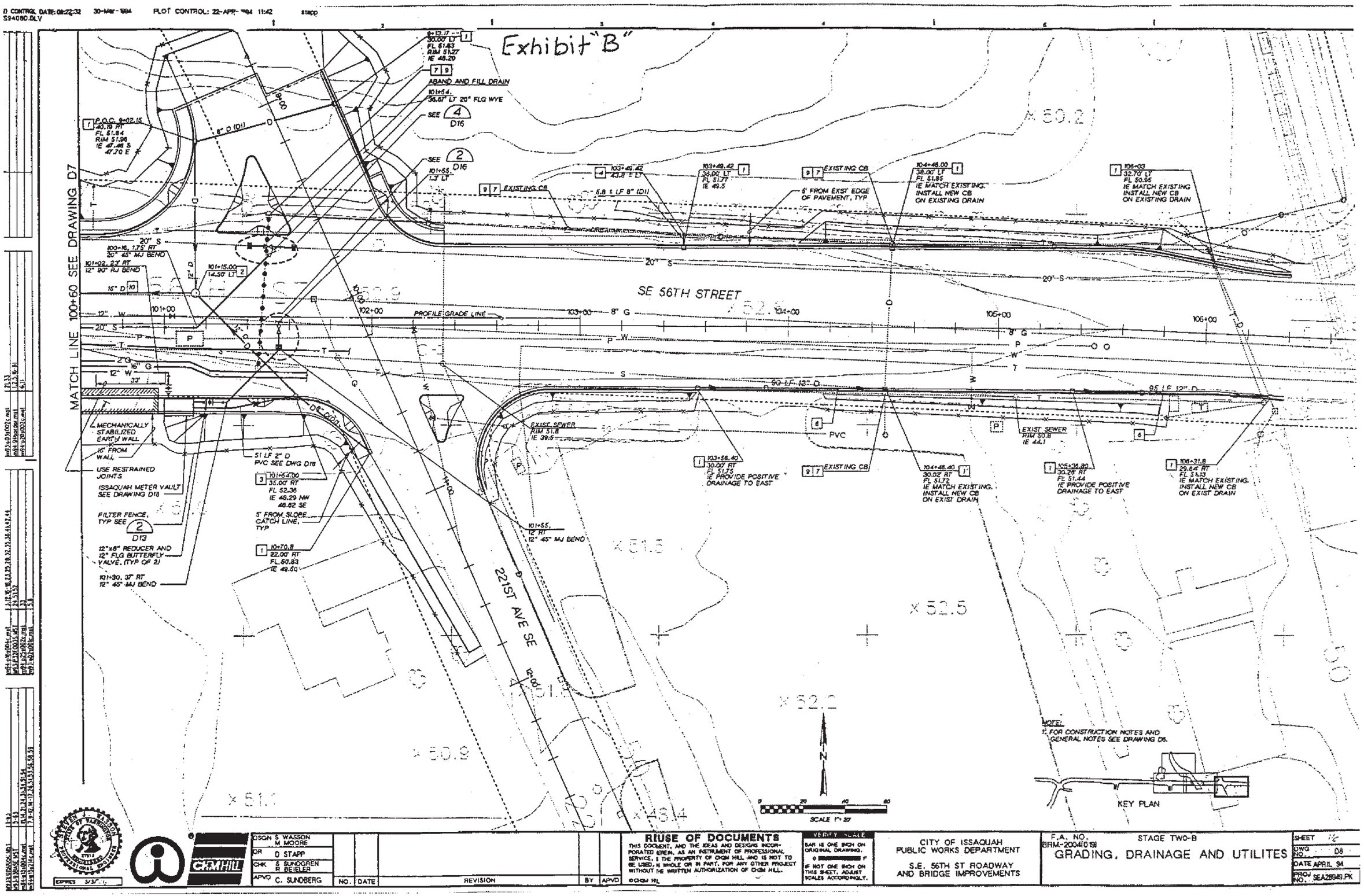

DSGN S WASSON M MOORE					
DR D STAPP					
CHK S SUNDGREN R BEIELER					
APVD C. SUNDBERG	NO.	DATE	REVISION	BY	APVD

RIUSE OF DOCUMENTS

THIS DOCUMENT, AND THE IDEAS AND DESIGNS INCORPORATED HEREIN, AS AN INSTRUMENT OF PROFESSIONAL SERVICE, IS THE PROPERTY OF CH2M HILL AND IS NOT TO BE USED, IN WHOLE OR IN PART, FOR ANY OTHER PROJECT WITHOUT THE WRITTEN AUTHORIZATION OF CH2M HILL.

©CH2M HILL

VERIFY SCALE

BAR IS ONE INCH ON ORIGINAL DRAWING.

IF NOT ONE INCH ON THIS SHEET, ADJUST SCALES ACCORDINGLY.

CITY OF ISSAQUAH
PUBLIC WORKS DEPARTMENT

S.E. 56TH ST ROADWAY AND BRIDGE IMPROVEMENTS

F.A. NO. BRM-2004(019)

STAGE TWO-B

GRADING, DRAINAGE AND UTILITES

SHEET 1/2

DWG NO. D8

DATE APRIL 94

PROJ NO. SEA28949.PK

EXHIBIT "C"

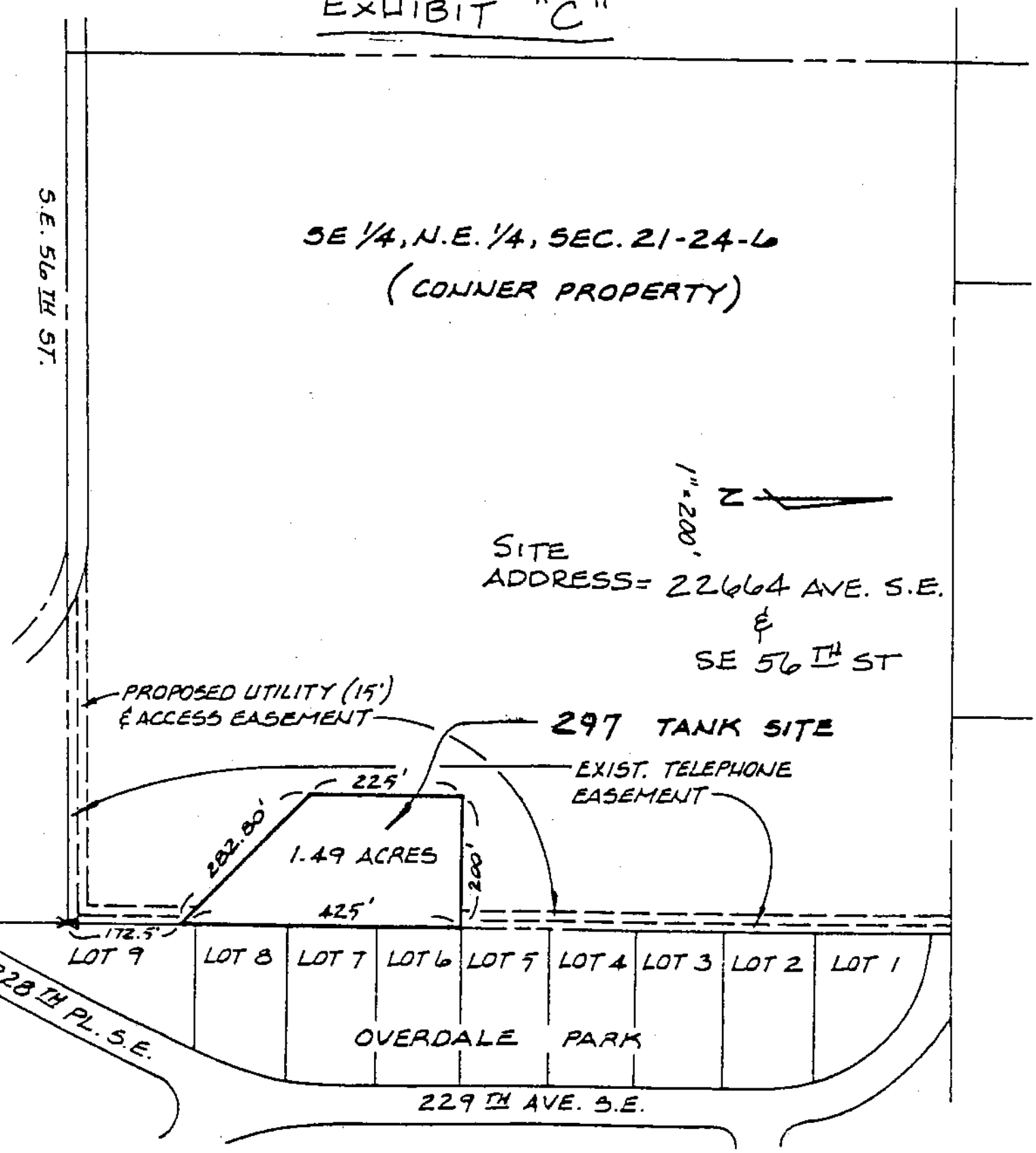
SE 1/4, N.E. 1/4, SEC. 21-24-6
(CONNER PROPERTY)
S.E. 56TH ST.
1" = 200'
N
SITE
ADDRESS= 22664 AVE. S.E.
&
SE 56TH ST
PROPOSED UTILITY (15')
& ACCESS EASEMENT
297 TANK SITE
EXIST. TELEPHONE
EASEMENT
225'
282.80'
1.49 ACRES
200'
425'
172.5'
LOT 9
LOT 8
LOT 7
LOT 6
LOT 5
LOT 4
LOT 3
LOT 2
LOT 1
228TH PL. S.E.
OVERDALE PARK
229TH AVE. S.E.

This page intentionally left blank.

CITY OF ISSAQUAH
SEP 3 1996
RECEIVED

AMENDMENT NO. 1 TO THE AGREEMENT FOR INTERTIES AND 297 TANK LEASE

THIS AMENDMENT is made by and between the Sammamish Plateau Water and Sewer District, a municipal corporation, in King County, Washington ("District"), and the City of Issaquah a municipal corporation, in King County, Washington ("City") for the purposes set forth herein.

SECTION I: RECITALS

1.1 District and City desire a third intertie located on Black Nugget Road to increase system redundancy and other emergency purposes.
1.2 District and City are authorized by RCW Chapter 39.34 to enter into interlocal agreements for joint action.

In consideration of the terms and conditions contained herein, the parties now agree to amend their existing Interlocal Agreement entitled **AGREEMENT FOR INTERTIES AND 297 TANK LEASE** executed in May 1994 by adding the following section:

SECTION VI: BLACK NUGGET ROAD INTERTIE

6.1 District and City agree to provide each other with an emergency standby source of water through an intertie connection between District and City water systems at the location described and depicted on Exhibit "1A" attached hereto, commonly known as Black Nugget Road Intertie. This connection shall be an emergency standby connection, and water shall only be drawn through this point when an emergency occurs. An emergency shall be considered any event that requires District's or City's water supply to be augmented on a temporary emergent basis.
6.2 District or City shall notify the other party in writing at least three (3) business days in advance of the date either party desires to receive water through the intertie. In case of emergency need, District or City shall provide water immediately upon oral notification of such emergency. Follow-up written notice of such emergency request shall be made by District or City to the other party within five (5) days of the commencement of such use.
6.3 The intertie is constructed and owned by the City. The intertie is capable of being placed into operation at any time.
6.4 Water supplied by District through the intertie will be treated. Water supplied by the City through the intertie will be untreated.
6.5 District and City shall use reasonable efforts to provide an uninterrupted supply of water. Neither party shall be liable for any shortage or interruption in the delivery of water. In addition, neither party shall be liable for any failure, interruption, or shortage of water, or any loss or damage resulting therefrom occasioned by any cause beyond the control of either party. District

and City do not guarantee the availability of water through the intertie at all times because of each parties' respective needs and water demand. Further, during critical water shortage periods as determined by either party, District or City may close the intertie until sufficient water supply exists to make such available for use by either party. In the event District or City declares and/or imposes water usage restrictions within their boundaries, District and City agree to adopt and impose water usage restrictions no less restrictive than those adopted by the other party as a pre-condition to receiving water through the intertie.

6.6 All water delivered under this agreement may only be resold to members/customers within the parties' respective water service boundary for use therein.

6.7 City shall measure all water delivered through the intertie by metering equipment owned by the City. District and City will monitor the water flow measurements. District shall own, operate, and maintain any water line from the District side of the intertie vault to the District water system. City shall be responsible for the flushing of such intertie water line as reasonably necessary to ensure water quality.

6.8 Only City personnel shall operate the intertie valve. District shall notify City when there is a need for emergency intertie water supply; in such event, City's personnel shall operate the valves for opening and closing the intertie.

6.9 In the event that District or City receive water through the intertie, both parties agree to replenish or replace the same volume of water received and delivered from the intertie to the other party within seventy-two hours of the time of receipt. In the event such water delivered is not replaced by the receiving party within such period, the party receiving such water shall pay the other party for such water delivered at the commercial commodity rate charged by the party delivering such water. The party delivering such water shall bill the party receiving such water monthly for the amount of water delivered. The party receiving such water shall pay the other party within sixty (60) days of the date of such billing. Any billings not paid by the party within such sixty-day period, shall accrue interest at the rate of twelve percent (12%) per annum until paid.

Approved As To Form **District Legal Counsel**	**SAMMAMISH PLATEAU WATER AND SEWER DISTRICT ("District")**
By _____	**By** Ronald E Klitt
Its _____	**Its** GENERAL MANAGER
Dated _____	**Dated** 8-26-96

Office of the City Attorney

By _____

Its _____

Dated 9/4/96

CITY OF ISSAQUAH ("City")

By _____

Its Mayor

Dated 9-12-96

STATE OF WASHINGTON)
) ss.
COUNTY OF KING)

I certify that I know or have satisfactory evidence that RONALD E. LITTLE is the person who appeared before me, and said person acknowledged that he signed this instrument, on oath stated that he was authorized to execute the instrument and acknowledged it as the GENERAL MANAGER of Sammamish Plateau Water and Sewer District, a municipal corporation, to be the free and voluntary act of such municipal corporation for the uses and purposes mentioned in the instrument.

Dated August 26, 1996

Name Susan A. Tucker

NOTARY PUBLIC
STATE OF WASHINGTON
SUSAN A. TUCKER
My Appointment Expires APR 1, 1998

Notary Public in and for the State of Washington, residing at Issaquah, Wa.
My Appointment Expires 4/1/98

STATE OF WASHINGTON)
) ss.
COUNTY OF KING)

I certify that I know or have satisfactory evidence that Rowan Hinds is the person who appeared before me, and said person acknowledged that he signed this instrument, on oath stated that he was authorized to execute the instrument and acknowledged it as the Mayor of the City of Issaquah, a municipal corporation, to be the free and voluntary act of such municipal corporation for the uses and purposes mentioned in the instrument.

Dated 9-12-96

Name Donnalee Pickrel

NOTARY PUBLIC
STATE OF WASHINGTON
DONNALEE PICKREL
COMMISSION EXPIRES
9-25-00

Notary Public in and for the State of Washington, residing at Issaquah
My Appointment Expires 9-25-00

This page intentionally left blank.

REC'D SEP 14 2011

AMENDMENT NO. 2 TO THE
AGREEMENT FOR INTERTIES AND 297 TANK LEASE

THIS AMENDMENT NO. 2 TO THE AGREEMENT FOR INTERTIES AND 297 TANK LEASE ("Amendment" or "Amendment No. 2") is made by and between the Sammamish Plateau Water and Sewer District, a Washington municipal corporation ("District"), and the City of Issaquah, a Washington municipal corporation ("City") (individually a "Party" and collectively the "Parties") for the purposes set forth herein.

SECTION I: RECITALS

1.1 The Parties entered into an agreement entitled "Agreement for Interties and 297 Tank Lease" ("Agreement") providing for interties between their respective water systems for emergency water supply, and further providing for the District to make available to the City up to one half of the District's 297 Tank's storage capacity of 2.25 million gallons for additional emergency standby water supply so that the City would not have to construct its own reservoir for such purpose. The Agreement was effective May 23, 1994, and has a term of twenty five (25) years, provided that either Party may cancel and terminate the 297 Tank Leasehold upon giving two (2) years advance written notice to the other Party.

1.2 In 1996, the Parties amended the Agreement by Amendment No. 1 ("Amendment No. 1") to add an additional intertie between the Parties' respective water systems.

1.3 The Agreement provided that in the event either Party received water through the interties, the Party was required to replace the same volume of water received and delivered through the intertie to the other Party, provided if a Party receiving water through an intertie failed to do so within a specified period, the Party must pay the other Party for the water received at a specified rate. The Agreement also required the City to pay District the amount of $24,564 annually for water availability in the 297 Tank ("Availability Charge"), with such Availability Charge subject to adjustment every three years based on an identified consumer price index.

1.4 The Parties have determined that, since the commencement of the Agreement, the City has not paid the Availability Charge owing to the District for storage capacity in the 297 Tank as provided for in the Agreement. The Parties now desire to settle and compromise any dispute arising from the City's failure to pay the Availability Charge and to set forth their agreement regarding the amount and timing of the City's payment of the Availability Charge owing to the District under the Agreement. The City has also requested that Section 4.7 of the Agreement be amended to modify the time period to give notice to cancel and terminate the tank leasehold from two (2) years to two hundred seventy (270) days.

NOW, THEREFORE, in consideration of the terms and conditions set forth herein, the Parties agree as follows:

SECTION II: WATER AVAILABILITY CHARGE PAYMENT

2.1 The Parties agree that, for the time period of the Agreement from May 23, 1994 up to and through May 23, 2010, the City shall pay the District an Availability Charge of Four Hundred Eighty One Thousand Two Hundred Sixty Three Dollars and Forty Eight Cents ($481,263.48), payable in three (3) equal installments of One Hundred Sixty Thousand Four Hundred Twenty One Dollars and Sixteen Cents ($160,421.16) ("Installment Payments") due on September 1, 2011, September 1, 2012 and September 1, 2013 respectively. In consideration of the City's agreement to pay as set forth above, the District agrees to waive any claim for interest, costs, damages, attorneys fees or other charges arising from the City's failure to pay Availability Charges from May 23, 1994 through May 23, 2010. Provided that if the City fails to pay any Installment Payment to the District within forty-five (45) days of its due date and after the District makes written demand for payment, the Installment Payment shall thereafter accrue interest at the rate set forth in Section 4.6 of the Agreement until paid to the District in full.

2.2 The Parties agree that, for the time period of the Agreement from May 23, 2010 up to and through May 22, 2011, the City shall pay the District an Availability Charge of Thirty Seven Thousand Five

Hundred Sixty Five Dollars and Twenty Eight Cents ($37,565.28), and annually thereafter as adjusted pursuant to the requirements of Section 4.6, provided the Parties agree that Section 4.6 of the Agreement requiring the payment of Availability Charges annually on May 23, the effective date of the Agreement pursuant to Section 5.8, is hereby modified and amended to provide that such annual Availability Charges shall be due and payable to the District on September 1 of each year the Tank leasehold is in effect as set forth in Section IV of the Agreement ("Amended Availability Charge Payment Due Date"), and that if the City fails to pay any Availability Charge to the District within forty-five (45) days of its due date and after the District makes written demand for payment, the Installment Payment shall thereafter accrue interest at the rate set forth in Section 4.6 of the Agreement until paid to the District in full. Provided the City shall pay the District an Availability Charge of Thirty Seven Thousand Five Hundred Sixty Five Dollars and Twenty Eight Cents ($37,565.28) on September 1, 2011, for the time period of May 23, 2010 up to and through May 22, 2011, together with a prorated payment of Ten Thousand Three Hundred Ninety Four Dollars and Ninety Two Cents ($10,394.92) for the time period of May 23, 2011 up to and through August 31, 2011, to account for the Amended Availability Charge Payment Due Date.

SECTION III: TANK LEASEHOLD TERMINATION NOTICE

3.1 The Parties agree that Section 4.7 of the Agreement is hereby amended to modify the notice period required to terminate the Tank leasehold to read as follows:

> The term of the 297 Tank lease shall commence upon the effective date of this Agreement and shall continue for a period of twenty five (25) years, provided, however, either Party may cancel and terminate the Tank leasehold upon giving at least two hundred seventy (270) days advance written notice to the other Party, provided the annual Availability Charge shall be paid by the City to the District on a prorated basis to the date of termination based on the Availability Charge applicable to the annual term during which the Tank leasehold is terminated.

SECTION IV: GENERAL PROVISIONS

4.1 The recitals in Section I above are true and incorporated into and made a part of the terms of this Amendment as though re-stated herein full.

4.2 Except as expressly amended by this Amendment, the Agreement remains in full force and effect according to its terms conditions and is not otherwise modified or amended.

4.3 This Amendment may be executed in one or more counterparts, each of which shall be deemed an original and with the same effect as if all Parties had signed the same document. All such counterparts shall be construed together and shall constitute one instrument, but in making proof hereof it shall only be necessary to produce one such counterpart.

4.4 The Parties each represent and warrant they have the full power and authority to enter into this Amendment and to carry out all actions required of them by the Agreement. All persons executing this Amendment in a representative capacity represent and warrant they have the full power and authority to bind their respective municipal entities.

SAMMAMISH PLATEAU WATER & SEWER DISTRICT ("DISTRICT")	CITY OF ISSAQUAH ("ISSAQUAH")
By: [signature] Name: John C. Krauss Title: General Manager Date: 8/29/11	By: [signature] Name: Ava Frisinger Title: Mayor of Issaquah Date: 8-22-11

Approved as to Form
District Legal Counsel

By: [signature]
Its:
Dated: 9/6/11

Approved as to Form
Office of the City Attorney

By: Wayne Tanaka [signature]
Its: Attorney - City of Issaquah
Dated: 8/19/11

STATE OF WASHINGTON)
) ss
COUNTY OF KING)

I certify that I know or have satisfactory evidence that John C. Krauss is the person who appeared before me, and said person acknowledged that he/she signed this instrument, on oath stated that he/she was authorized to execute the instrument, and acknowledged it as the General Manager of SAMMAMISH PLATEAU WATER & SEWER DISTRICT to be the free and voluntary act of such entity for the uses and purposes mentioned in the instrument.

Notary Public
State of Washington
ASEA M SANDINE
My Appointment Expires Aug 1, 2012

D: Aug 29, 2011
[signature]
: Asea M. Sandine
(Print Name)
ry Public in and for the State of Washington
Commissioner Aug 1, 2012 Expires:

STATE OF WASHINGTON)
) ss
COUNTY OF KING)

I certify that I know or have satisfactory evidence that Ava Frisinger is the person who appeared before me, and said person acknowledged that he/she signed this instrument, on oath stated that he/she was authorized to execute the instrument, and acknowledged it as the Mayor of THE CITY OF ISSAQUAH to be the free and voluntary act of such entity for the uses and purposes mentioned in the instrument.

DATED: 8-22-11
Deanne Meinberg
NAME: Deanne Meinberg
(Print Name)
Notary Public in and for the State of Washington
Commission Expires: 11-19-11

This page intentionally left blank.

AMENDMENT NO. 3 TO THE AGREEMENT FOR INTERTIES AND 297 TANK LEASE

THIS AMENDMENT NO. 3 TO THE AGREEMENT FOR INTERTIES AND 297 TANK LEASE ("Amendment" or "Amendment No. 3") is made by and between the Sammamish Plateau Water and Sewer District, a Washington municipal corporation, in King County, Washington ("District"), and the City of Issaquah, a Washington municipal corporation, in King County, Washington ("City") (individually a "Party" and collectively the "Parties") for the purposes set forth herein.

SECTION 1: RECITALS

1.1 The Parties entered into an agreement entitled "Agreement for Interties and 297 Tank Lease ("Agreement") providing for interties between their respective water systems for emergency water supply, and further providing for the District to make available to the City up to one half of the District's 297 Tank's storage capacity of 2.25 million gallons for additional emergency standby water supply so that the City would not have to construct its own reservoir for such purpose. The Agreement was effective May 23, 1994, and has a term of twenty-five (25) years, provided that either Party may cancel and terminate the 297 Tank Leasehold upon giving two (2) years advance written notice to the other Party.

1.2 In 1996, the Parties amended the Agreement by Amendment No. 1 ("Amendment No. 1") to add an additional intertie between the Parties' respective water systems.

1.3 In 2011, the Parties amended the Agreement by Amendment No. 2 ("Amendment No. 2") to resolve a situation arising from the City's failure to pay Water Availability Charges referenced in Section 4.6 of the Agreement to the District and to modify the time period for the Parties to give notice to cancel and terminate the tank leasehold set forth in Section IV of the Agreement.

1.4 On June 12, 2012 the City formally requested the tank lease provision(s) set forth in Section IV of the Agreement be terminated, effective March 19, 2013, and the Parties desire to ratify and confirm the termination of the tank lease as of that date. The Parties also desire to modify, amend and supersede the provisions of Section III of the Agreement relating to the S.E. 56th Street Intertie.

1.5 District and City are authorized by RCW Chapter 39.34 to enter into interlocal agreements for joint action.

Now, therefore, in consideration of the terms and conditions contained herein, the Parties agree as follows:

SECTION 2: SE 56TH STREET INTERTIE

2.1 Section III of the Agreement is hereby rescinded and deleted in its entirety, and superseded and replaced in its entirety with the following provision:

SECTION III: S.E. 56TH STREET INTERTIE

3.1 District and City agree to provide each other with an emergency standby source of water through an intertie connection between District and City water systems constructed at the location described and depicted on Exhibit "B" of the Agreement. This connection shall be an emergency standby connection, and water shall only be drawn through this point when an emergency occurs. An emergency shall be considered any event that requires District's or City's water supply to be augmented on a temporary emergent basis.

3.2 District or City shall notify the other Party in writing at least three (3) business days in advance of the date either Party desires to receive water through the intertie. In case of emergency need, District or City shall provide water immediately upon oral notification of such emergency. Follow-up written notice of such emergency request shall be made by District or City to the other Party within five (5) days of the commencement of such use.

3.3 The intertie is constructed and owned by City. The intertie is capable of being placed into operation at any time.

3.4 Water supplied by District to City is treated. Water supplied by the City to District is treated.

3.5 District and City shall use reasonable efforts to provide an uninterrupted supply of water. Neither Party shall be liable for any shortage or interruption in the delivery of water. In addition, neither Party shall be liable for any failure, interruption, or shortage of water, or any loss or damage resulting therefrom occasioned by any cause beyond the control of either Party. District and City do not guarantee the availability of water through the intertie at all times because of each Parties' respective needs and water demand. Further, during critical water shortage periods as determined by either Party, either Party may close the intertie until sufficient water supply exists to make such available for use by either Party. In the event either Party declares and/or imposes water usage restrictions within its boundaries, the Parties agree to adopt and impose water usage restrictions no less restrictive than those adopted by the other Party as a pre-condition to receiving water through the intertie.

3.6 All water delivered under this Agreement may only be resold to members/customers within the Parties' respective water service boundary for use therein.

3.7 City shall measure all water delivered through this intertie by metering equipment owned by the City. The Parties will monitor the water flow measurements. City shall own, operate, and maintain the intertie up to the District side of the intertie vault. District shall own, operate, and maintain any water line from the District side of the intertie vault to the District water system. City shall be responsible for flushing of such intertie water line as reasonably necessary to ensure water quality.

3.8 Only City personnel shall operate the intertie valve. District shall notify City when there is a need for emergency intertie water supply; in such event, City personnel shall operate the valves for opening and closing the intertie.

3.9 In the event either Party receives water through the intertie, both Parties agree to replenish or replace the same volume of water received and delivered from the intertie to the other Party within seventy-two (72) hours of the time of receipt. In the event such water delivered is not replaced by the receiving Party within such period, the Party receiving such water shall pay the other Party for such water delivered at the commercial commodity rate charged by the Party delivering such water. The Party delivering such water shall bill the Party receiving such water monthly for the amount of water delivered. The Party receiving such water shall pay the other Party within sixty days (60) days of the date of such billing. Any billings not paid by the Party within such sixty-day period, shall accrue interest at the rate of twelve percent (12%) per annum until paid.

SECTION 3: 297 TANK LEASE

3.1 Section IV: 297 TANK LEASE of the Agreement is hereby deleted and rescinded in its entirety and the Parties ratify and confirm the termination of that Section IV and the 297 Tank Lease effective March 19, 2013.

SECTION 4: GENERAL PROVISIONS

4.1 The recitals set forth in Section 1 above are incorporated in full into this Amendment No. 3 by this reference.

4.2 Except as expressly amended by this Amendment No. 3, the Agreement as previously amended by Amendment No. 1 and Amendment No. 2, remains in full force and effect according to its terms and conditions and is not otherwise modified or amended.

4.3 This Amendment No. 3 may be executed in one or more counterparts, each of which shall be deemed an original and with the same effect as if all Parties had signed the same document. All such counterparts shall be construed together and shall constitute one instrument, but in making proof hereof it shall only be necessary to produce one such counterpart.

4.4 The Parties each represent and warrant they have the full power and authority to enter into this Amendment No. 3 and to carry out all actions required of them by the Agreement. All persons executing this Amendment in a representative capacity represent and warrant they have the full power and authority to bind their respective municipal entities.

4.5 Except as otherwise provided herein, this Amendment No. 3 shall take effect ("Effective Date") upon the approval and execution of this Agreement by both the District Board of Commissioners and the City Council of City.

SAMMAMISH PLATEAU WATER & SEWER DISTRICT ("DISTRICT")

By: _____

Name: John C. Krauss

Title: General Manager

Date: July 21, 2014

CITY OF ISSAQUAH ("CITY")

By: _____

Name: Fred Butler

Title: Mayor

Date: 10/3/14

Approved as to Form
District Legal Counsel

By: _____

Its: _____

Dated: _____

Approved as to Form
Office of the City Attorney

By: Wayne Tanaka

Its: City Attorney

Dated: 10/3/14

STATE OF WASHINGTON)
) ss.
COUNTY OF KING)

I certify that I know or have satisfactory evidence that John C. Krauss is the person who appeared before me, and said person acknowledged that he/she signed this instrument, on oath state that he/she was authorized to execute the instrument, and acknowledged it as the General Manager of SAMMAMISH PLATEAU WATER & SEWER DISTRICT to be the free and voluntary act of such entity for the uses and purposes mentioned in the instrument.

Notary Public
State of Washington
PATRICIA ANN MOE
My Appointment Expires May 8, 2016

Dated July 21, 2014

Signature of Notary Public Patricia Ann Moe

Printed Name Patricia Ann Moe

My Appointment Expires May 8, 2016

STATE OF WASHINGTON)
) ss.
COUNTY OF KING)

I certify that I know or have satisfactory evidence that Fred Butler is the person who appeared before me, and said person acknowledged that he/she signed this instrument, on oath state that he/she was authorized to execute the instrument, and acknowledged it as the Mayor of THE CITY OF ISSAQUAH to be the free and voluntary act of such entity for the uses and purposes mentioned in the instrument.

Dated 10/3/2014

Signature of Notary Public

Printed Name Megan M. Greyer

My Appointment Expires 08/27/2016

MEGAN M. GREGOR
COMMISSION EXPIRES
NOTARY
PUBLIC
08-27-16
STATE OF WASHINGTON

This page intentionally left blank.

SAMMAMISH PLATEAU WATER & SEWER DISTRICT
KING COUNTY, WASHINGTON

RESOLUTION NO. 4313

RESOLUTION OF THE BOARD OF COMMISSIONERS OF SAMMAMISH PLATEAU WATER AND SEWER DISTRICT, KING COUNTY, WASHINGTON, APPROVING AN AGREEMENT WITH THE CITY OF ISSAQUAH ADDRESSING GOVERNANCE AND UTILITY SERVICE DELIVERY OPTIONS.

WHEREAS, Sammamish Plateau Water and Sewer District ("District") is a water-sewer special purpose district authorized and existing pursuant to Title 57 Revised Code of Washington (RCW); pursuant to such authority, the District owns and operates water and sewer utility systems and provides retail utility services to customers located within the District's corporate and approved utility service area boundaries; and

WHEREAS, the City of Issaquah ("City") is an optional municipal code city authorized and existing pursuant to Title 35A RCW and other statutes; pursuant to such authority, the City owns and operates water and sewer utility systems and provides retail utility services to customers located within the City's corporate and approved utility service area boundaries; and

WHEREAS, a portion of the City is located within the District's water and sewer service area boundaries, and the City previously commissioned a study to consider the unilateral assumption of that part of the District's water and sewer service areas and facilities located within the City's corporate boundaries; and the City publicly released its study entitled "August 2013 Assumption Study" of the District ("Assumption Study"); and the District has undertaken the review and preliminary analysis of the Assumption Study, and has considered responding to the Assumption Study; and

WHEREAS, by the adoption of Resolution No. 4274 on August 19, 2013, the District Board of Commissioners determined the unilateral assumption of the portion of the District located within the City by the City may have significant adverse financial, operational, environmental and other impacts on and to the District and its utility customers, including the customers and District facilities which may be potentially taken and assumed by the City located within the City's corporate boundaries, and also on the District's customers and District facilities located outside the City's corporate boundaries which would remain a part of the District and be served by the District after any such unilateral assumption by the City; and an assumption could detrimentally impact levels of utility service provided by the District and the cost of such service; and a unilateral assumption could have detrimental impacts on other jurisdictions in which the District provides utility service, including the City of Sammamish and unincorporated King County; and

WHEREAS, based on the concerns identified by the District Board of Commissioners in Resolution No. 4274, the Board of Commissioners adopted policies in such resolution, including (a) there be no change in utility governance within the District's utility service area, including

city assumptions, without the concurrence of all affected governmental jurisdictions within such area, including the District; (b) opposing any unilateral attempt to change the governance structure within the District utility service area, including city assumptions, without the concurrence of all affected jurisdictions, including the District; (c) the citizens affected by any proposed change in governance within the District's utility service area should have the right to vote on any such proposed change in governance; and, with the concurrence of the affected jurisdictions, there should be no change in governance unless a majority of any citizens affected by the proposed change approve by vote the proposed change; (d) the District was open to discussions with the City and other governmental jurisdictions such as the City of Sammamish to identify and understand objectives and possible mutual interests relative to governance issues; and (e) the District intended to negotiate and enter into long-term agreements with jurisdictions which may be impacted by any proposed change in governance within the District's utility service area to study and consider governance options regarding the provision of utility service within the District and the region in which it serves, conditioned on the agreement there be no attempts by any city to assume all or any portion of the District without the District's consent, based on a process and schedule as agreed to by the District; and

WHEREAS, the District and the City have reached agreement relative to the study of governance and utility delivery service options in the form attached hereto as **Exhibit A** and incorporated herein by this reference ("Agreement") to address such matters, including the City's agreement there be no City attempt to assume all or any part of the District located within the City for a period of ten (10) years without the District's consent; now, therefore,

BE IT RESOLVED, by the Board of Commissioners of Sammamish Plateau Water & Sewer District, King County, Washington, as follows:

1. The Agreement in the form attached hereto as **Exhibit A** is hereby approved.

2. Robert Abbott, the President of the District Board of Commissioners, is hereby authorized and directed to execute the Agreement on behalf of the District and to provide such executed Agreement to the City of Issaquah for mutual execution as soon as possible or to have the Agreement executed in counterparts as provided in the Agreement.

4313

ADOPTED by the Board of Commissioners of Sammamish Plateau Water and Sewer District, King County, Washington, at a regular open public meeting held on the 21st day of January, 2014.

Individual Commissioner's Vote on this Resolution:

Approved:	✓	Robert Abbott, President and Commissioner
Opposed:		
Abstained:		
Absent:		
Approved:	✓	Lloyd Warren, Vice President and Commissioner
Opposed:		
Abstained:		
Absent:		
Approved:	✓	Mary Shustov, Secretary and Commissioner
Opposed:		
Abstained:		
Absent:		
Approved:	✓	Tom Harman, Commissioner
Opposed:		
Abstained:		
Absent:		

4313

This page intentionally left blank.

EXHIBIT A
AGREEMENT

4313

This page intentionally left blank.

CITY OF
ISSAQUAH
CITY CLERK'S OFFICE

P.O. Box 1307
Issaquah, WA 98027-1307
Phone: (425) 837-3000
Fax: (425) 837-3009

REC'D JAN 23 2014

NOA 14-02
NOTICE OF ACTION
ISSAQUAH CITY COUNCIL

January 23, 2014

TO: Sammamish Plateau Water & Sewer District
Attn: Commissioner Lloyd Warren
1510 228th Ave. SE
Sammamish, WA 98075

RE: Resolution Relating to the Sammamish Plateau Water & Sewer District

AGENDA BILL NO: AB 6739

DATE OF ACTION: January 21, 2014

ACTION TAKEN: Approved Resolution No. 2014-01, Related to the Sammamish Plateau Water and Sewer District (District); approving a Memorandum of Agreement with the District; authorizing the Mayor to execute an agreement regarding timing of any assumption of the District; authorizing the administration to negotiate an Interlocal Agreement with the District pursuant to the MOA; and establishing March 17, 2014 as the date for consideration of the draft ILA.

ATTACHMENTS: Resolution 2014-01

Megan Gregor, City Clerk's Office

cc: Bob Harrison, Executive Office
File

0010.90000
WDT/gjz
1/15/14

RESOLUTION NO. 2014-01

A RESOLUTION OF THE CITY COUNCIL OF THE CITY OF ISSAQUAH, WASHINGTON, RELATED TO THE SAMMAMISH PLATEAU WATER AND SEWER DISTRICT (DISTRICT); APPROVING A MEMORANDUM OF AGREEMENT WITH THE DISTRICT; AUTHORIZING THE MAYOR TO EXECUTE AN AGREEMENT REGARDING TIMING OF ANY ASSUMPTION OF THE DISTRICT; AUTHORIZING THE ADMINISTRATION TO NEGOTIATE AN INTERLOCAL AGREEMENT WITH THE DISTRICT PURSUANT TO THE MOA; AND ESTABLISHING MARCH 17, 2014 AS THE DATE FOR CONSIDERATION OF THE DRAFT ILA.

WHEREAS, the City and District have a number of outstanding issues that should be resolved, and

WHEREAS, the Mayor and the District have executed a Memorandum of Agreement (MOA) dated January 13, 2014, and

WHEREAS, pursuant to the MOA, the City Council is to consider an agreement which effectuates a portion of the MOA, and

WHEREAS, the other provisions of the MOA are to be covered in an interlocal agreement to be negotiated by the parties, NOW, THEREFORE,

THE CITY COUNCIL OF THE CITY OF ISSAQUAH, WASHINGTON, HEREBY RESOLVES AS FOLLOWS:

Section 1. The City Council approves the Memorandum of Agreement dated January 13, 2014, signed by the Mayor and the District.

Section 2. The Mayor is authorized to execute the Agreement implementing

portions of the Memorandum of Agreement as set forth in the agenda bill accompanying this resolution.

Section 3. The Administration is authorized to negotiate a draft interlocal agreement with the District covering the items set forth in the MOA.

Section 4. The draft interlocal agreement shall be considered by the City Council no later than March 17, 2014.

PASSED by the City Council this 21st day of January, 2014.

APPROVED:

PAUL WINTERSTEIN, COUNCIL PRESIDENT

APPROVED by the Mayor this 21st day of January, 2014.

FRED BUTLER, MAYOR

ATTEST:

CHRISTINE EGGERS, CITY CLERK

APPROVED AS TO FORM:

BY: OFFICE OF THE CITY ATTORNEY

RESOLUTION NO. 2014-01 / AB 6779

This page intentionally left blank.

AGREEMENT

This Agreement ("Agreement") is made by and between the City of Issaquah, Washington ("Issaquah" or "City"), and the Sammamish Plateau Water and Sewer District ("District") (individually a "Party" and collectively the "Parties") for the purposes set forth below.

Whereas, the Parties have entered into a Memorandum of Agreement ("MOA") dated January 13, 2014 which sets forth certain commitments agreed upon by the Parties, and

Whereas, pursuant to that MOA, and in consideration of the terms and conditions set forth herein, the Parties agree as follows:

1. If Issaquah determines to proceed with an assumption of all or part of the District and its property and utility facilities located within Issaquah under Chapter 35.13A RCW, or to allow or to consent to another city proceeding with the assumption of all or part of the District and its property and utility facilities located within Issaquah, within 10 years of March 17, 2014, pursuant to RCW 35.13A.070, Issaquah agrees to only do so with the consent of the District and based on a process and schedule agreed to by the Parties. Provided, the City shall have the right to proceed with a unilateral attempt to assume the District immediately after the expiration of such ten-year period. Beginning no later than year three (3) of the ten-year period, the Parties will undertake three-party discussion, including the City of Sammamish, regarding governance and utility service delivery options relative to the District, Issaquah, and Sammamish. As part of such discussions, the Parties agree to promptly and in good faith provide and disclose non-exempt public records to facilitate the discussion and study process.

2. The District shall not take any formal position with respect to Issaquah's proposed annexation of the Klahanie PAA relative to the February 11, 2014 election. The District further agrees not to publicly respond to Issaquah's August 2013 Assumption Study of the District ("Assumption Study") nor to release any report on the Assumption Study unless required to do so as a matter of law. The City agrees the Assumption Study will not be used in the future with respect to any assumption of all or any portion of the District.

3. The Parties agree to resolve all outstanding claims regarding public records act disputes, agree to withdraw existing public records requests, and mutually waive all claims for alleged violation of the public records act. The City and the District shall bear their own costs and fees associated with those requests and related disputes.

4. Within forty eight (48) hours of the Effective Date of this Agreement, the District shall remove its signs referencing the District's web site www.letstalkaboutourwater.org, decommission such web site, and de-link such web site from the District's general web site and remove all related links from the District's general web site.

5. This Agreement is made under, and shall be governed by and construed in accordance with the laws of the State of Washington. Venue and jurisdiction of any lawsuit involving this Agreement shall exist exclusively in state and federal courts in King County, Washington. If either Party breaches or threatens to breach this Agreement, the other Party shall be entitled to seek all legal, injunctive or other equitable relief. All terms and conditions of this Agreement shall be subject to enforcement in an action for specific performance.

6. This Agreement shall be effective on the date by which both Parties have executed this Agreement ("Effective Date").

7. This Agreement may be executed in counterparts, each of which shall be deemed an original and with the same effect as if the Parties had signed the same document. All such counterparts shall be construed together and shall constitute one instrument, but in making proof hereof it shall only be necessary to produce one such counterpart.

8. The Parties represent and warrant this Agreement has been duly approved and authorized by their respective legislative authorities, that each Party has the full power and authority to enter into this Agreement and to carry out the actions required of them by this Agreement, and all persons signing this Agreement in a representative capacity represent and warrant they have the full power and authority to bind their respective municipal entities.

CITY OF ISSAQUAH

By: _____
Fred Butler, Mayor

Dated: 1/21/14

ATTEST:

By: _____
Christina Eggers, City Clerk

APPROVED AS TO FORM:
OFFICE OF CITY ATTORNEY:

By: _____
Wayne D. Tanaka

SAMMAMISH PLATEAU WATER
& SEWER DISTRICT

By: _____
Robert Abbott, President

Dated: 1-21-14

APPROVED AS TO FORM:

By: _____
John Milne

Sanville S.D.

AGREEMENT FOR JOINT OPERATION

OF WATER STORAGE FACILITIES

Effective Date: December 30, 1982

INDEX

	DESCRIPTION	Page No.
1.0	Purpose.	1
1.1	Existing Conditions.	1
1.2	Goals.	3
1.3	Means.	3
2.0	Definitions.	4
2.1	Reservoir.	4
2.2	Site.	4
3.0	Purchase of Interest in Reservoir.	4
3.1	Price.	4
3.2	Payment.	4
3.3	Condition of Title.	4
3.4	Closing.	4
3.5	Seller's Representations.	5
	A. Condition of Property.	5
	B. Suitability of Design.	5
3.6	Joint Operations and Maintenance.	5
4.0	Construction of Interties.	5
4.1	Description of Interties.	5
4.2	Plans and Specifications.	5
4.3	Bidding and Contract Administration.	6
	A. Control Board.	6
	B. Powers and Duties of Control Board.	6
	C. Approval by Legislative Bodies.	7

INDEX

	DESCRIPTION	Page No.
	D. Contracting Agency Construction.	7
4.4	Ownership.	8
4.5	Costs and Payments.	8
	A. Sharing of Costs; Definition.	8
	B. Establishment of Joint Account.	8
	C. Financing.	8
	D. Bonds.	9
	E. Adjustment for Final Cost.	9
	F. Interim Financing of Excess Costs.	9
5.0	OPERATION AND MAINTENANCE.	10
5.1	General.	10
5.2	Definitions.	10
	A. Jointly Owned Facilities.	10
	B. Water Supply Sources.	10
	C. Water System.	10
	D. Maintenance.	10
5.3		10
	A. Powers and Duties of the Control Board.	10
	B. Approval by Legislative Bodies.	11
5.4	Maintenance Agency.	12
	A. Authority and Responsibility.	12
5.5	Operation.	12
	A. Water Supply.	12

INDEX

DESCRIPTION		Page No.
B.	Reservoir Draw Down and Replenishment.	13
C.	Metering and Measurement of Use of Joint Facilities.	14
D.	Supply Control.	15
E.	Telemetry.	15
F.	Water System.	15
G.	Water Quality.	16
H.	Emergencies: Notice and Response.	16
I.	Purchase of Water.	17
J.	Federal, State and Local Regulations.	17
5.6	Maintenance of Jointly Owned Facilities.	17
A.	Scheduled Maintenance.	17
B.	Records.	18
C.	Costs.	18
D.	Payment.	19
E.	Establishment of Joint Maintenance Account.	19
6.0	Status of the Parties.	20
7.	Insurance.	20
A.	During Construction.	20
B.	After Construction	21
8.	Assignment.	21
9.	Successor Agencies.	21
A.		21

INDEX

	DESCRIPTION	Page No.
	B.	21
	C.	22
	D.	22
10.	Miscellaneous.	22
	A. Successors.	22
	B. Time.	22
11.	Approvals	22
12.	Disputes	22
	A. Arbitration.	22
	B. Costs and Attorneys Fees.	22
13.	Scope.	23
14.	Damage to Facilities.	23
15.	Change in proportion of Use.	23
16.	Effective Date.	23
17.	Term; Termination.	23

AGREEMENT FOR JOINT OPERATION OF WATER STORAGE FACILITIES

Agreement made by and between Water District No. 82 of King County, a water district formed pursuant to the laws of Chapter 57, Revised Code of Washington ("W.D. 82 or "District 82"), and Sahalee Sewer District of King County, a Washington sewer district formed pursuant to Revised Code of Washington, Chapter 56 ("Sahalee"), made at Redmond, Washington.

W I T N E S S E T H:

Whereas:

1.0 Purpose. This agreement provides for the Sahalee Sewer District (Sahalee) and King County Water District No. 82 (District 82) to commonly own, operate, and maintain an existing 3.0 million gallon reservoir (currently owned entirely by District 82) and three (3) separate interties between the adjacent water systems of Sahalee and District 82 to be jointly constructed under the terms of this agreement. The scope of this agreement is limited to the joint ownership, operation, and maintenance of the specific water system facilities identified herein and shall not be construed as indicating an intent by either Sahalee or District 82 to participate in the ownership, operation, and maintenance of any other water system facilities, currently existing or proposed for future construction.

1.1 Existing Conditions. The following existing conditions are precedent to this agreement:

A. Sahalee has, by its Resolution No. 578, as amended by its Resolution No. 605, adopted a General Plan for a complete water system providing for the establishment of a water system through the acquisition and purchase of the Water System of the Sahalee Water Company, Inc. The establishment of a water system by Sahalee has been approved by the King County Boundary Review Board in accordance with the requirements of RCW 36.93.090(4). The Sahalee General Plan for a complete water system has been approved by the King County Council, the designated King County Director of Health, and the designated King County Engineer in accordance with the requirements of RCW 57.16.010.

B. District 82 has adopted a General Plan for a complete water system. Said Plan and its amendments as set forth in the adopted resolution no. A-

426 and Engineering Report of District 82 have been approved by the King County Council, the designated King County Health Director, and the designated King County Engineer in accordance with the requirements of RCW 57.16.010.

C. Sahalee has entered into an agreement with the Sahalee Water Company, Inc., for the purchase and acquisition of the Water System of the Sahalee Water Company, Inc., located wholly within the legal boundaries of Sahalee. The purchase and transfer of title to the Water System in accordance with terms of this Agreement are to be completed on or before December 31, 1982.

D. Sahalee and District 82 have previously entered into an Agreement dated October 22, 1982. This Agreement provides, in part, the following:

(1) The establishment of a common east/west boundary between the water service areas of the parties at NE 20th Street.

(2) The cooperation in the planning and construction of hydraulically compatible interties between water systems for the purpose of enhancing the reliability of service to the parties' customers and to enable the potential joint use of facilities.

(3) To cooperate in the planning, construction, and use of source, storage, and transmission facilities consistent with the best interests of their present and future ratepayers and to provide for the development of water system facilities which are mutually compatible with and complimentary to the facilities of each system.

E. Sahalee and District 82 have jointly authorized and funded an engineering study for the purpose of cooperatively planning for the water service needs of their adjacent water system service areas in accordance with the terms and intent of the October 22, 1982, Agreement. This study has recommended the establishment of hydraulically compatible pressure zones and the implementation of joint use of District 82's existing 3.0 million gallon reservoir through the construction of three (3) interties between the systems in the 700 hydraulic elevation pressure zone and the coordinated operation of water supply to this portion of both water systems.

The study concludes that the recommendations are in accordance with the intent of the Agreement and that the best interests of each party's existing and future ratepayers will be met by their implementation.

1.2 Goals. The goals of this Agreement are to (1) insure and increase reliability in meeting the normal and emergency Water System's demands of both Sahalee and District 82 and (2) to realize the economies available through the joint ownership, operation, and maintenance of water system facilities over the ownership, operation, and maintenance of independent facilities providing identical service.

1.3 Means. The purpose and goals of this Agreement are intended to be accomplished by the following means:

A. Sahalee shall purchase and District 82 shall sell, a fifty (50) percent undivided interest in its existing 3.0 million gallon reservoir as described and in accordance with the price, terms, and conditions as set forth in Section 3.0.

B. Sahalee and District 82 shall construct three (3) system interties and related telemetry and control facilities to allow the joint use of the 3.0 million gallon reservoir. The description of the facilities, their cost, the joint responsibility for the cost, the facility ownership, and the schedule for their completion are all as more fully set forth in Section 4.0.

C. Sahalee and District 82 shall agree to the operation of their Water System facilities and the jointly owned 3.0 million gallon reservoir and interties in such a manner as to maintain acceptable water service conditions to the customers in each System and to limit its demands on the jointly owned facilities. The specific conditions for operation of the jointly owned facilities are all as more fully set forth in the Agreement.

D. Sahalee and District 82 shall agree to provide and to equally pay the cost of required, normal, and routine maintenance and required, periodically scheduled maintenance and repair and/or replacement of the jointly owned facilities. The specific conditions for providing for the maintenance of the jointly owned facilities are all as more fully set forth in the Agreement.

E. The Sahalee purchase of the one-half interest in the 3 million gallon reservoir and the payment for its share of the interties to be constructed in accordance with the terms of this Agreement are to be provided by funds provided to Sahalee by the Sahalee Water Company, Inc., under the terms of the Water System Purchase Agreement, which funds were collected and received by the

Sahalee Water Company, Inc., under the terms of several water service agreements for the specific purpose of acquiring water storage and supply facilities necessary to the services of the water system.

NOW THEREFORE, the Parties hereto do hereby agree as follows:

2.0 Definitions. As used herein the words defined below shall have the following definitions:

2.1 Reservoir. Reservoir shall mean the 3 million gallon water storage reservoir and appurtenant facilities owned by District 82 as more fully described in Exhibits A-1 and A-2 attached hereto and by this reference incorporated herein.

2.2 Site. The term site shall mean that certain real property upon which the reservoir is located, the approximate address of which is 22025 N.E. 12th Place, Redmond, Washington and which is legally described as set forth in Exhibit A-3 attached hereto and by this reference incorporated herein.

3.0 Purchase of Interest in Reservoir. District 82 agrees to sell and Sahalee agrees to purchase an undivided interest in and to the reservoir and appurtenant facilities described in Exhibits A-1 and A-2 hereto, and the site legally described on Exhibit A-3 attached hereto.

3.1 Price. The price shall be $287,388.17, provided that of such price the sum of $238,601.60 shall be deposited in the Water District 82 1958 revenue bond fund (parity), and the sum of $48,786.58 be deposited into the joint construction fund to be created under paragraph 4.5.B. hereof.

3.2 Payment. The terms of payment shall be all cash at closing.

3.3 Condition of Title. Title of District 82 is to be free of encumbrances except the terms and conditions of that certain agreement entered into by and between Carma Developers (Washington) Inc., a Washington corporation, and Charles Henderson Co., and King County Water District No. 82, a municipal corporation, and King County, a political subdivision of the State of Washington and a municipal corporation, dated February 22, 1979. Water District 82 shall furnish to Sahalee a WLTA standard form policy of title insurance and as soon as practical prior to closing, a preliminary commitment therefore, issued by Pioneer National Title Insurance Co. The title policy to be issued shall contain no exceptions other than those provided in said standard form plus the encumbrances or defects noted in this paragraph.

3.4 Closing. This transaction shall be closed in the offices of Jonson & Jonson, P.S. on or before December 31, 1982. At time of closing, each Party shall

furnish the funds, papers, documents and things required to be so furnished herein. Sahalee shall be entitled to possession of the property conveyed herein upon closing.

3.5 Seller's Representations. Seller represents and warrants to Purchaser as an inducement to enter into this transaction as follows:

A. Condition of Property. That the reservoir was constructed in accordance with the plans and specifications and Section D-100-79 of the standards of the American Water Works Association; maintained in accordance with standards in the industry; and such reservoir is in good condition and free of any material defects.

B. Suitability of Design. That the design of said reservoir is reasonably suitable for the purposes, uses and operations described in this Agreement.

3.7 Joint Operations and Maintenance. After closing, the parties shall jointly operate and maintain the reservoir and site in accordance with the terms of this agreement pertaining to operation and maintenance of joint facilities.

4.0 Construction of Interties. The parties shall jointly construct the interties connecting the water systems of District 82 and Sahalee as described in subparagraph 4.1 herein (hereafter referred to as "construction" or "project") in accordance with the terms and conditions hereafter set forth.

4.1 Description of Interties. The interties to be constructed shall be constructed on the locations and in accordance with descriptions set forth in Exhibits B-1, B-2, and B-3 attached hereto and by this reference incorporated herein.

4.2 Plans and Specifications. Subject to final approval by each District, construction plans and specifications therefor shall be prepared by RH2 Engineering, which firm is a consulting engineer for District 82 and primary consulting engineer for Sahalee Sewer District said plans shall be consistent with and shall contain sufficient detail to construct the interties generally described in Exhibits B-1, B-2 and B-3 herein. In the event a dispute shall arise between the parties concerning such plans and/or specifications, and such dispute cannot be settled amicably by the parties, such dispute shall be arbitrated in accordance with paragraph 12 hereof.

4.3 Bidding and Contract Administration.

A. Control Board. There shall be a Control Board consisting of one Commissioner from the Board of each of the parties. Each of the parties shall appoint one member and one alternate of the Control Board, and may recall him and appoint another in his place at any time. The board may by unanimous vote of all its members adopt rules of procedure governing its operation. Decisions shall be made only by unanimous approval. Meetings of the Control Board, other than regularly scheduled meetings, may be called by either member on written notice sent by certified mail at least three days before the date of the meeting.

B. Powers and duties of Control Board.

(i) The Control Board shall have general supervision of the construction of the project which shall be in strict accordance with the plans and specifications prepared by RH2 Engineering, and shall consult as necessary with RH2 Engineering concerning supervision of construction, and financing of the project.

(ii) From time to time as determined by the board, and on request of any of the parties, the board shall meet with the governing bodies of the parties for the purpose of reporting on the progress of the project and of receiving instructions and recommendations.

(iii) The board shall have the power:

To recommend approval of the plans prepared by the engineers for the project, which plans are subject to the approval of each District;

To determine the timing of the various stages of the project;

To recommend calling for bids.

To recommend approval of contracts for construction;

To approve orders for changes during construction; provided, that as to each facility, no change order shall be approved which, together with all change orders previously approved for the facility, will result, as estimated by the engineers, in an increase of more than five per cent of the contract price, unless the same be approved by the legislative bodies of the parties entitled to benefit from the facility;

To determine the successful bidder for each construction contract;

To recommend acceptance of the work done under each contract;

(iv) The board shall certify to the parties the amounts of any surplus or defiency in the Joint Construction Fund following completion of the project required to be refunded or made up by each party.

C. Approval by legislative bodies. As to each intertie to be constructed, the following matters must be approved by the legislative body of each of the parties entitled to benefit from the facility:

(i) Final design and call for bids.

(ii) Awarding construction contracts.

(iii) Final acceptance from the contractor.

Any party may, by resolution of its legislative body, delegate to the Control Board authority to approve on its behalf all or any part of the foregoing.

D. Contracting Agency Construction. As between the parties, Sahalee is designated as the Contracting Agency and shall have the power, authority and responsibility to carry out the construction contemplated herein, and shall be subject to the control of the Control Board as heretofore provided. Except for the sale of bonds, all contracts affecting the project shall be entered into in the name of Sahalee. Vouchers for claims payable from the Joint Construction Fund shall be approved by the commissioners of each of the parties. Sahalee shall furnish to the other parties a monthly account of all receipts and disbursements from the fund. Upon approval of the project by the Control Board, Sahalee shall be reimbursed, as part of the cost of the project, for any administrative expense reasonably incurred by the Sahalee in carrying out its duties as contracting agency during the course of construction. Sahalee shall have the full power and authority to carry out the project, subject to the control of the Control Board.

Either District may construct all or a portion of such intertie or interties which will ultimately belong to it under the terms of this agreement, or such additional portions as the parties may agree in writing, providing such construction shall be:

(i) Subject to all terms, conditions and covenants of this agreement; and

(ii) In strict accordance with the plans and specifications therefor provided by RH2 Engineering; and

(iii) Inspected and certified as conforming to such plans and specifications by an independent inspector chosen by the other District; and

(iv) Be in strict compliance with the laws, rules and regulations pertaining to public bidding and public work contracts; and

(v) Neither party shall charge the joint construction fund in amounts in excess of the actual costs for labor and materials for the work, if any such work be performed.

4.4 Ownership. The ownership interest of the parties in and to the interties to be constructed shall be as set forth in Exhibit C hereto.

4.5 Costs and Payments. Each party shall pay their share of the costs for such construction in accordance with the following terms and conditions:

A. Sharing of Costs; Definition. Each of the parties shall pay one-half the costs incurred for construction of such interties. The term costs shall include but not be limited to those costs defined in Exhibit D-1 attached hereto and by this reference incorporated herein. In addition, the contracting party shall be paid such additional costs to reimburse said party for the costs of administering the contract as are defined in Exhibit D-2 attached hereto.

B. Establishment of Joint Account. Sahalee will cause to be established in the office of the King County Treasurer an account entitled "Sahalee Sewer District/Water District 82 Joint Construction Fund." This account will be used solely for receiving and disbursing funds for the cost of the project construction. Subject to the approval of each Districts' Board of Commissioners, vouchers will be prepared by Sahalee and submitted to the King County Office of Budget and Accounts for issuance of warrants payable by the King County Treasurer from the Joint Construction Fund.

C. Financing. Each party shall, within forty-five days after the execution hereof, deposit ten percent of its share of the project costs and pay the same into the construction fund. Within thirty days after receiving from RH2 Engineering a firm estimate as to the project costs, but in no event later than April

1, 1983, each party shall deposit the balance of its share of such costs into said fund. Each party shall promptly certify to the Control Board, the date of each such deposit. It is anticipated that the contracting agency will issue warrants from month to month to pay the installments due the various contractors as the work progresses. Each party's proportionate share of the monthly cash requirements as determined by the Control Board shall be paid into the joint construction fund not later than the date specified by the Control Board, but not more than one month prior to the date on which each party will be required to pay into the joint construction fund, based on preliminary estimates of cost by the engineers is as follows:

Water District 82	$103,000
Sahalee	103,000

The estimated shares may be revised from time to time as necessary to reflect actual contract prices, change orders and other adjustments normally to be expected in the course of the project.

D. Bonds. Each party reserves the right to fix the maturities, interest rates and other particulars of its bonds, and to sell them in such manner as it may choose. Each party agrees to take such action as may be necessary to secure the successful issuance and sale of its bonds in the amount necessary to produce its share of the estimated project cost.

E. Adjustment for Final Cost. The project being made up of a number of facilities, and the beneficial interest of each party in each facility being unequal, and not uniform as to all facilities in the project, it is the intent of this agreement that the final cost of each facility, as determined by the engineers, shall be shared equally. Upon completion of the project, the engineers will prepare a statement of the actual cost of construction of each facility. Overhead costs other than construction costs, not attributable directly to a particular facility, such as professional fees, warrant interest, and administrative overhead shall be allocated among the facilities in proportion to the cost of construction of each.

F. Interim Financing of Excess Costs. In the event the cost of the project should exceed the funds on hand in the Joint Construction Fund, RH2 Engineering shall certify to each party the amount due to pay such excess and each

party shall deposit one-half of said amount in the Joint Construction Fund within twenty days after receipt of such certification.

5.0 OPERATION AND MAINTENANCE.

5.1 General. The parties shall operate and maintain the jointly owned facility as follows.

5.2 Definitions.

A. Jointly Owned Facilities. "Jointly Owned Facilities" include the 3.0 million gallon reservoir as described in Exhibit A hereto and the facilities to remain jointly owned as designated in Exhibit C hereto.

B. Water Supply Sources. "Water Supply Sources" shall mean the Sahalee and District 82 groundwater or other water supply resource together with related pumping equipment and controls and water supply booster pump stations which provide water supply to the customers of each water system which are connected to a portion of each water system utilizing the water storage provided by the jointly owned 3.0 million gallon reservoir.

C. Water System. "Water System" shall mean all water supply sources, transmission, distribution, and related facilities of Sahalee and District 82 connected to and dependent upon use of the jointly owned 3.0 million gallon reservoir as the primary or sole facility to provide necessary normal and emergency source of stored water.

D. Maintenance. "Maintenance" shall mean and include inspection, testing, adjustment, lubrication, repair, improvement, upgrading and replacement of component parts, portions, and all of the several facilities comprising the jointly owned facilities.

5.3 The Control Board established in Section 4.3.A. of this Agreement for the construction of interties shall be responsible for the operation and maintenance of the jointly owned facilities in the following respects:

A. Powers and Duties of the Control Board.

(i) The Control Board shall meet annually and review operating reports on the operation and maintenance of the jointly owned facilities to be provided by each of the Districts each quarter.

(ii) From time to time as determined by the board, or on request of any of the parties, the board shall meet with the governing parties for the purpose of reporting on the status of the operation and maintenance and of receiving instructions and recommendations.

(iii) The board shall have the power:

- To determine the timing of maintenance to be performed on the jointly owned facilities which exceeds a cost of $1,000;
- To recommend the call for bids for such maintenance;
- To recommend approval of contracts for maintenance;
- To approve orders for changes to the maintenance contract, provided that as to each facility, no change orders shall be approved which together with all change orders previously approved by the facility will result, as estimated by the engineers, in an increase of more than 5 percent of the contract price, unless the same be approved by the legislative bodies of the parties entitled to benefit;
- To determine the successful bidder for each maintenance contract;
- To recommend acceptance of the work done under each contract.

(iv) The board shall certify to the parties the amounts of any surplus or deficiency in the Joint Maintenance Fund following completion of the maintenance required to be refunded or made up by each party.

(v) The Board shall review the operational records of the jointly owned facilities and may make recommendations to either Party for the improvement of their System.

(vi) The Board shall provide to each Party as of October 1 of each year, a budget for planned maintenance for the next year to provide a sufficient amount of time to provide the maintenance funds.

B. Approval by Legislative Bodies. As to each maintenance expense which exceeds $1,000, the following matters must be approved by the legislative body of each of the Parties:

(i) Call for bids.

(ii) Awarding maintenance contracts.

(iii) Final acceptance from the contractor.

Any Party may, by resolution of its legislative body, delegate to the Control Board authority to approve on its behalf, all or any part of the foregoing.

5.4 Maintenance Agency. As between the Parties, District 82 is designated as the Maintenance Agency and shall have the power, authority, and responsibility set forth in Paragraph A herein and shall be subject to the control of the Control Board.

A. Authority and Responsibility. District 82 is responsible for assembling and keeping all records of operation and maintenance and the cost thereof for the jointly owned facilities. Such records are to be provided by the Maintenance Agency to either Party or the control board at their request. All contracts affecting the maintenance of the jointly owned facilities shall be entered into in the name of District 82. Vouchers for claims payable from the jointly owned facilities' Maintenance Fund shall be approved by the commissioners of each of the Parties. District 82 shall furnish to the other Parties a monthly account of all receipts and disbursements from the fund. Upon approval by each of the parties, District 82 shall be reimbursed, as part of the cost of the project, for any administrative expense reasonably incurred by the District in carrying out its duties as the Maintenance Agency. District 82 shall have the full power and authority to carry out the maintenance described herein subject to the Control Board.

5.5 Operation. Each Party controls its own withdrawal and replenishment of the reservoir, which will provide water supply as well as pressure to each of the Party's water systems. The Parties thus agree to operate the jointly owned facilities, and to operate their respective water systems in accordance with the following terms and conditions:

A. Water Supply. Each Party agrees to maintain sufficient water supply source capacity and necessary related pumping capacity, equipment, and controls to supply, at any time required, a volume of 867 gallons within a continuous 24-hour period and sequence of consecutive 24-hour periods for each customer meter connected to its Water System served by the jointly owned facilities. Should either Party's water supply capacity not meet this requirement, such party shall immediately proceed to acquire such adequate source and pumping capacity, equipment and controls, such party shall immediately discontinue the connection of new customer meters to its Water System served by the jointly

owned facilities and shall not allow further customer meter connections until this deficiency is corrected.

B. Reservoir Draw Down and Replenishment. The parties shall operate the jointly owned facilities and their own water systems in accordance with the following conditions for the lowering of the water surface elevation in the 3.0 million gallon reservoir and the replenishment or replacement of the water used through the draw down.

(i) Normal Domestic Demands. The Parties agree to restrict the draw down or lowering of the hydraulic elevation of the water surface from the overflow elevation of 700 feet to 672 feet for normal domestic demands. Normal domestic demands shall include all annual water use demands of the connected customer meters. The critical periods of draw down will be during summer months when normal demands are at or near maximum levels for one or more consecutive days. During these periods, each Party shall control and operate its source or sources of water supply to replenish or replace the volume of water it has withdrawn from storage within any 24-hour period by the end of the period. The 24-hour period shall begin at 6:00 a.m. and end at 6:00 a.m. the following day. Replenishment or replacement of water used from storage by each Party during non-peak normal domestic demand periods (winter non-irrigation months) shall meet the same criteria as stated above except that the managers of each Party may establish and agree to alternate operating criteria during these non-peak normal domestic demand periods which are of mutual benefit provided that during these periods, the hydraulic water level elevation of the reservoir is not lowered below 672 feet, and further provided that such agreement may be revoked by either party at any time.

(ii) Emergency Fire Demand. Either party may withdraw water from the reservoir to meet each System's fire flow requirement during a period of maximum peak normal domestic demand or at other times, if required. This criteria anticipates one fire in either Party's Water System and that two such fires will not occur in the same 24-hour period. To assure that water from storage can be provided in the maximum volumes required while maintaining required minimum pressures at all points in each Party's Water System, the Parties agree that neither

District shall draw down or lower the hydraulic elevation of the water surface to less than hydraulic elevation 652 feet.

(iii) The Parties agree to replenish or replace the volume of water they have withdrawn from storage as follows:

(a) Volume used and withdrawn for normal domestic demand in accordance with the requirements set forth above under normal domestic demands.

(b) Volume used and withdrawn for emergency fire flow within 72 hours of the time of use.

(iv) Other Emergencies. The Parties recognize the potential of emergency conditions such as failure of water system facilities, power interruptions, natural disaster, the simultaneous occurrence of more than one fire or other sudden occurrences. Should such other emergencies occur, each Party or both Parties may withdraw from the reservoir such volumes of water as is available without regard to the draw down of the hydraulic elevation of the water level. Further, each Party agrees to apply all of its available Water System rescources to meet such emergency condition and to establish such conservation measures as may be necessary for a period not to exceed seven (7) consecutive calendar days for each such emergency. Nothing herein shall be construed to require such assistance and cooperation beyond such seven day period. The Parties recognize and agree that the occurrence of such emergencies may adversly affect customer service and Water System service conditions equally in each of the Party's Water Systems. The Parties further agree to apply all Water System resources to the restoration of normal operation conditions and the refilling of the reservoir as soon as practical following such emergency without regard to use or withdrawal of stored water or other water source by either Party.

C. Metering and Measurement of Use of Joint Facilities.

(i) The interties to be constructed by the Parties under this Agreement provide for the installation of metering equipment at each connection between the Parties' Water Systems. These metering facilities may include either a single meter measuring both in forward and reverse or two meters with flow routed through one meter in one direction and flow in the opposite direction routed through the second meter.

(ii) Measurement of Flow. The measurement of the volume of flow between systems in any period shall be the sum of the net directional volume at each metering facilities at the end of the period less the same sum at the beginning of the period.

(iii) Measurement of Volume. The Parties shall record the volume of water removed from storage by either party by the following means:

(a) By Sahalee. The sum of the net directional volume at each metering facility. If the sum so determined flowed into the Sahalee System, then that volume will represent the volume removed by Sahalee from storage. If the sum so determined flowed into District 82's System, then that volume has been put into storage by Sahalee.

(b) By District 82. The volume removed by District 82 shall be determined with reference to fluctuation in reservoir levels adjusted for the volume of water removed or put into storage by Sahalee as determined above.

D. Supply Control. Each of the Parties shall operate and control their water supply sources and pumping equipment to accomplish the reservoir operating conditions as set forth in Paragraph B above. Sahalee shall measure its replenishment of the reservoir by monitoring its flows at the metering facilities at the interties. Water District 82 shall measure its replacement by monitoring the water level in the reservoir.

E. Telemetry. The jointly constructed interties provide for improvements to the telemetry and control facilities of each Party necessary for monitoring and control of the jointly owned facilities. Each Party shall make such other additions, if any, to their telemetry and control facilities as are necessary to assure their performance in accordance with the conditions set forth in this section. The maintenance, repair, and replacement of these jointly constructed telemetry and control facilities shall be the individual responsibility of the Parties to assure their reasonable, continued operation necessary to the operating conditions.

F. Water System. Each Party covenants and agrees to improve as necessary and to maintain and operate its Water System connected to the jointly

owned facilities in a manner to assure its continuous ability to meet the operational conditions set forth in this section.

G. Water Quality.

(i) General. Each Party agrees and covenants to maintain a reasonable water quality from each source of supply and within its Water System connected to the joint use facilities. As a minimum, the chemical, bacteriological, and other parameters for the measurement of water quality shall meet the standards and regulations of all governing Federal, State, and local agencies. Each Party will be responsible for all improvements and costs, if any, necessary to meet these requirements for water quality.

(ii) Chemicals. The addition of chemicals to either party's water supply shall be prohibited except to the extent necessary to comply with applicable statutes, rules and regulations duly passed by federal and state agencies, and to the extent the parties may further agree in writing as is necessary to cure aesthetic problems with the water supplied by either District to the other, such as those caused by hydrogen sulfide. The application of any such chemicals, including the rate of application, and the residual in the system, shall be in strict compliance with applicable federal and state regulations and as a further condition, such chemicals shall only be applied at a rate no greater than that necessary to treat the specific problem encountered. Any application of chlorine for treatment of hydrogen sulfide or sulfide related problems shall be such that there is no more than one-tenth of one part per million of chlorine in such water supply immediately following the application. Failure to enforce this provision shall not prohibit the subsequent enforcement thereof.

H. Emergencies: Notice and Response.

(i) In the event of an emergency condition occurring in either Party's Water System, the other Party shall be immediately notified. The Managers of each Party's Water System shall establish the procedures for such notification providing as a minimum a priority of names and telephone numbers for the required notification. The Party so notified shall immediately provide all assistance available and necessary to the other Party and shall modify his System's operation and control as necessary to meet the emergency in accordance with the intent of this operation section.

(ii) Reimbursement. In the event of such emergency, the party suffering the emergency shall reimburse the other party for all labor incurred by the other party in responding to such emergency, and for any other costs reasonably allocable to such emergency.

I. Purchase of Water.

(i) General. This agreement does not provide for nor is it the intent of the Parties to provide on a continuous basis water supply to the other Party. No such future intent is contemplated by the Parties. However, in the event of an emergency, either Party may be required to provide a source of supply to the other Party for a short period of time, not to exceed seven (7) days until the condition causing such emergency has been corrected. Neither shall be obligated to provide the other water for any greater period. No payment for water supply under these conditions is required provided that the volume of water used is replaced within one week by the Party using the same.

(ii) Metering. The intertie meters shall be read and recorded once monthly on or about the last day of each month. Should the meters show a net supply of water to one of the Parties water systems for two consecutive months of more than 100,000 gallons per month, the Party using such water shall, within 10 days after the meter reading establishing such use, issue a voucher to King County directing a warrant to be issued to the other for such usage at a rate equal to the higher of the two Parties commodity rate charged to residential customers for water use. The Party using such water shall continue to pay therefore at such rate until such usage shall cease.

J. Federal, State and Local Regulations. Each party agrees and covenants to comply with all federal, state and local regulations in the operation of its water system connected to the jointly owned facilities.

5.6 Maintenance of Jointly Owned Facilities. The jointly owned facilities shall be maintained as follows:

A. Scheduled Maintenance. The following maintenance activities will be performed according to the following schedule:

	ACTIVITY	INTERVAL
1.	Inspect reservoir coating system - internally and externally	Annually
2.	Inspect, test, and lubricate all isolation, air vacuum and control valves	Annually
3.	Test and calibrate intertie flow meters	Every 2 Years
4.	Test and calibrate telemetry information and control capabilities	Quarterly
5.	Repair any component working improperly	As needed

B. Records. The Maintenance Agency shall keep a record indicating all component's maintenance schedule and the actual maintenance performed. The record of the maintenance performed shall include the date, maintenance person's name, time, condition of equipment, current reading or indication displayed on equipment, a description of the maintenance performed and suggestions for additional maintenance or repairs to be performed and such record shall be available to the other Party at all times during normal work hours, and the Maintenance Agency shall provide the other system upon request with copies thereof at Maintenance Agency's actual cost. Additionally, the equipment or component shall be labelled or tagged with information stating the most recent date of inspection or maintenance and the person's name who accomplished the maintenance.

C. Costs.

(i) The cost for providing maintenance shall be computed using the rates for personnel and equipment shown in the attached Exhibit E. Materials used in the maintenance activities shall be billed at actual cost. The Maintenance Agency shall coordinate all maintenance activities and utilize personnel and equipment from both Parties, as they are reasonably available to do the previously stated maintenance. A computation of the costs incurred in performing the maintenance by each Party shall be accomplished quarterly and submitted to the Control Board for payment.

(ii) Changes necessary in the hourly rate schedule to reflect increased costs or other unforeseen circumstances shall be mutually agreed upon by the Managers of both Districts.

(iii) An average monthly cost for normal maintenance has been estimated to be $100 per month for each Party. This does not include the cost of repainting or repair to any of the major components of the jointly owned facilities.

The amounts stated are based on estimated costs to maintain and operate the jointly owned facilities. The amounts are to be adjusted in the future by the Managers to conform to changes in costs or as the result of experience in administering the project so that both Parties will be fully reimbursed for the actual cost of maintenance performed. In addition to the fixed monthly expense

described in the preceding paragraph, certain items of maintenance may need to be performed that have not been identified in the fixed monthly expense schedule. The cost of this work will be shared equally.

D. Payment.

(i) The amounts to be paid by each Party for maintenance to the jointly owned facilities Maintenance Fund shall commence on the first day of the month following the month in which this Agreement is executed. Each Party's payment to the jointly owned facilities' Maintenance Fund shall become due on the first day of each calendar month. Each Party shall pay by the twentieth day of the month after which time the billing will be delinquent. Charges omitted in one month may be billed in the following month. Delinquent charges shall accrue interest on the unpaid balance at the rate of 12 percent per annum from the date of delinquency until paid. Each Party irrevocably covenants, obliges and binds themselves to pay the applicable rates and payments referred to in Exhibit E and this section. These payments shall be maintenance expenses and shall expressly be made a part of the maintenance expenses of the Parties budgets in future bond issues or other financing payable in whole or in part from the revenue of the Systems.

(ii) It is recognized that District 82 may have outstanding revenue bonds payable in whole or in part from the gross revenues of its Water System. Nothing in this Agreement is intended to violate nor shall it be construed to violate any covenants respecting those outstanding bonds and such covenants to the extent there is a conflict between them and this section shall control with respect to such outstanding bonds and bonds issued on a parity therewith.

(iii) At the end of every calendar year, if the balance in the Joint Maintenance Fund exceeds $2,000, the Parties may be reimbursed the amount in excess of $2,000 or the Parties can apply the excess against future fixed monthly charges to the jointly owned facilities' Maintenance Fund. In no event shall the balance in the fund be less than $2,000 as the result of a reimbursement because of excess funds.

E. Establishment of Joint Maintenance Account. District 82 will cause to be established in the office of the King County Treasurer an account

entitled "Water District 82/Sahalee Sewer District of King County Jointly Owned Facilities Maintenance Fund," herein referred to as the Maintenance Fund. This account will be used solely for receiving and disbursing funds for the cost of maintenance. Subject to the approval of each Board of Commissioners, vouchers will be prepared by District 82 and submitted to the King County Office of Budget and Accounts for issuance of warrants payable by the King County Treasurer from the Maintenance Fund.

6.0 Status of the Parties. This Agreement shall not be construed to establish a partnership or any other legal relationship between the parties hereto except as common owners of a one-half undivided interest in the jointly owned facilities. If either party should become liable for the tortious act of the other, however, the acting party agrees to defend, indemnify and hold harmless the non-acting party from any and all liability arising out of such act or acts, including attorney fees and costs in connection with any litigation or controversy with respect thereto.

7. Insurance.

A. During Construction. Builder's All Risk Insurance during the construction period shall be provided at the expense of the contractor or contractors as a part of the cost of the project, and such insurance shall name District 82 and Sahalee as additional named insureds. In addition, each contractor shall be required to provide liability insurance in such amounts and such coverages as shall be determined by the Control Board which shall be reasonably sufficient to protect the parties against liability arising from such construction.

B. After Construction. Each party may but shall not be required to maintain casualty insurance for all risks of direct physical loss from external cause on the jointly owned facilities to the extent of their interest at the current replacement cost of such improvements, which costs shall be updated annually. Nothing shall prohibit the parties from further agreeing that one of the parties shall provide such insurance naming the other party an additional named insured, and for the sharing of costs of such insurance.

Each party shall maintain public liability insurance with combined single limits of not less than $1 million insuring losses arising from or out of the joint facilities.

8. Assignment. Except as set forth herein, neither party may assign, sell, transfer, convey or otherwise allow any other person, corporation, partnership, firm or other entity to in any way use either the reservoir or the interties without the prior written consent of the other party, which may be withheld for any reason.

9. Successor Agencies. It is recognized that one or more of the parties may, during the term of this agreement, merge with or annex to another municipal corporation which may not be a party to this agreement, or may be dissolved by operation of law, or may be divided between two or more other municipal corporations, or may lose the right to serve all or part of its territory because of annexation by another municipal corporation or may, for some other reason not now foreseen, cease, either in whole or in part, to furnish water to all or part of its present territory. The parties recognize the difficulty of providing for the effect of every such possible contingency on the operation of this agreement. The parties do, however, agree on the following principles and procedures, which shall apply so far as practicable, in case of any change of the nature described in the preceding sentence:

A. No change in this agreement shall be made which will impair the security of the holders of any bonds issued to pay for the project.

B. The parties, being municipal corporations, exist for the purpose of serving the inhabitants within their respective boundaries. No change shall be made which will reduce the service or increase the cost to any substantial area served by the project, differently from the rest of the area which is served.

C. In the event of a change of boundaries by annexation or consolidation of a part or all of the territory of one of the parties which is served by the project, the parties agree to negotiate in good faith for any amendments to this agreement necessary to insure that the cost of constructing and operating the project, and the benefits from its use, shall be shared equitably among such public agencies as shall have jurisdiction over the area in which the project is located and which it is designed to benefit.

D. If all of that portion of the area of one of the parties to this agreement which is served or designed to be served by the project should be annexed to a city or other District, the city or other District shall succeed the district as a party, and shall assume all rights and obligations of the District whose interest is assumed.

10. Miscellaneous.

A. Successors. This Agreement shall be binding upon the heirs, successors and assigns of the Parties hereto.

B. Time. Time is of the essence in this Agreement.

11. Approvals. Each party shall approve the acceptance and adoption of the terms and conditions hereof by resolution and provide the other party with a certified copy of the same. Each party represents to the other that it is has the full power and authority to enter into this agreement and to bind itself to and to perform each and every term, covenant and condition herein, and that to do so will not violate any other agreement, contract, resolution or bond covenant of the respective Districts.

12. Disputes. Any dispute arising hereunder shall be determined in accordance with the following terms:

A. Arbitration. In the event of a dispute arising between District 82 and Sahalee as to any term, condition, covenant, duty or obligation hereunder, or the interpretation or construction of any clause or term hereof, all such questions shall be submitted to arbitration under the procedures of the American Arbitration Association.

B. Costs and Attorneys Fees. In the event it is necessary for either party to obtain the services of counsel to enfore any term hereof, the unsuccessful

party in such dispute as determined by the arbitrator, shall pay to the other party all of the other party's costs and attorneys fees, including the costs of depositions and expert witnesses, incurred in such dispute. For the purpose of this subparagraph, actual attorneys fees shall be presumed to be reasonable, however, such presumption is rebuttable.

13. Scope. The scope of this agreement is expressly limited to the construction, maintenance and operation of the reservoir and interties and shall not be construed to impose any obligation on either party not expressly required to carry out the terms of this agreement.

14. Damage to Facilities. In the event the reservoir or any intertie constructed hereunder is destroyed or irreparably damaged from any cause, the facility so destroyed or damaged shall be promptly replaced by the parties and the cost thereof shall be paid in the same proportion as the ownership of the facility destroyed or damaged. Each party agrees to apply any insurance proceeds received as a result of such damage or destruction towards the cost of such replacement if not prohibited from doing so by bond covenants binding upon such district. The parties may agree that such facilities may not be reconstructed and in such event, the proceeds of any insurance shall be retained by the parties in the same porportion as premiums paid therefore. In the case of termination, the reservoir may be disposed of by the Parties together with the site, for the best price obtainable. The proceeds shall be shared by each Party to the percentage of participation in the facility applicable at that time.

15. Change in proportion of Use. The parties may agree to adjust the percentage of use to which they may be entitled under the terms of this agreement either as a permanent amendment to this agreement or as a temporary arrangement, and may agree that one party will pay the other on an agreed basis for such temporary use of all or part of the parties contract share of the reservoir.

16. Effective Date. The effective date of this agreement is December 27, 1982.

17. Term; Termination. This Agreement shall be effective from the effective date setforth herein and shall continue for a period of fifty (50) years thereafter or until such time as the subject property has been sold and the proceeds of sale have been distributed.

APPROVED BY RESOLUTION NO. A-486, dated Dec 27 1982.

By: _____
Commissioner

APPROVED BY RESOLUTION NO. _____ dated _____.

WATER DISTRICT NO. 82

By: _____
President and Commissioner

By: _____
Secretary and Commissioner

SAHALEE SEWER DISTRICT

By: _____
President and Commissioner

By: _____
Secretary and Commissioner

EXHIBIT A

3 MG RESERVOIR --- APPURTENANCES AND SITE

A-1 3 MG RESERVOIR

The reservoir consists of a steel water storage reservoir 64 feet in diameter with a stored water depth of approximately 116 feet and a stored water capacity volume of approximately 3 million gallons. The reservoir improvements include foundation; inlet, outlet, overflow, and drainpipe connections; access manholes; exterior and interior access ladder; roof vent and all other appurtenances.

A-2 RESERVOIR AND SITE APPURTENANCES

The reservoir and site appurtenances include the following:

1. Electrical service, wiring, and equipment except those items provided by and in the ownership of the power utility.

2. All piping, valves, and fittings on site comprizing the Water System connections to the reservoir, reservoir drain, overflow connections, site and reservoir drainage facilities, and all other systems existing and necessary to the operation and maintenance of the reservoir and site.

3. Reservoir site fencing.

4. Site improvements including access roadway, surfacing, and landscaping.

The reservoir and site appurtenances specifically exclude the following:

1. Telemetry equipment of District 82 located at the reservoir.

2. Moveable items not necessary to or a part of the function and operation of the reservoir owned by District 82 and stored at the reservoir site at the time of purchase, such as, backhoes, valves, water meters, water pipe, and other items.

A=3__RESERVOIR_SITE_DESCRIPTION

The real property comprising the site of the reservoir is Tract 'K' as recorded in the Plat of Inglewood Glenn, Volume 112 of Plats, pages 60 to 62, records of King County, Washington.

specifications by a licensed professional engineer in accordance with description, location, and specific function set forth in this Exhibit B.

B-1__216TH_AVENUE_NE_INTERIE

1. Watermain Connection

A 12-inch ductile iron watermain shall be constructed on 216th Avenue NE from NE 17th Place to entrance to Sahalee Estates (approximately NE 20th Street), continuing from NE 20th Street on 215th Place NE in Sahalee Estates to Sahalee Drive West and then on Sahalee Drive West for 215th Place NE to 213th Avenue NE. Connections to existing watermains shall be as follows:

a. District 82's existing 8-inch watermain on 216th Avenue NE at a point south of its existing connection with an existing 8-inch watermain in NE 17th Place.

b. Sahalee's existing 10-inch watermain on Sahalee Drive West at a point east of its existing connection with an existing 6_inch watermain in 215th Place NE.

c. Sahalee's existing 6-inch watermain on Sahalee Drive West at a point west of its existing connection with an existing 6-inch watermain in 213th Avenue NE.

2. Metering Facility

A metering facility shall be located on the 12-inch watermain intertie on 216th Avenue NE at a point at or near the south boundary of Sahalee Estates (approximately NE 20th Street). The exact location to be determined based on suitable, available space within the right-of-way for its installation. The metering facility shall include a buried concrete vault containing a meter or meters for measuring flow in each direction through the interties, valves, fittings, and related appurtenances.

3. Telemetry and Control Equipment

The telemetry and supervisory control necessary to monitor the flow through this intertie and to control water supply facilities required for both Sahalee and District 82 are as follows:

a. Sahalee -- Equipment to be installed will provide for sensing and transmitting to Sahalee's central control panel the flow in each direction through the intertie and the level at the 3 million gallon reservoir. Equipment at the Sahlaee central control panel shall provide for receiving indicating, totalizing, and recording flow in each direction through the intertie and water level in the 3 million gallon reservoir. Additional equipment at the central control panel shall also provide for starting and stopping of the Sahalee water supply sources based on a combination of accumulated

flow through the intertie and water level in the 3 million gallon reservoir. The water supply control equipment shall provide for the automatic start and stop of each supply source such that the total volume of water withdrawn from the 3 million gallon reservoir in any 24-hour period will be replenished within the same 24-hour period while maintaining minimum reservoir water level and without causing an overflow to occur to the reservoir.

b. District 82 -- Equipment to be installed will provide for sensing and transmitting to District 82's central control panel the flow in each direction through the intertie. Equipment to be added to District 82's central control panel shall provide for receiving indicating, totalizing, and recording flow in each direction through the intertie.

B-2__SHANNONWOOD/SAHALEE_RESERVOIR_SITE_INTERTIE

1. Watermain Connection

A 8-inch ductile iron watermain extension shall be constructed from the terminus of an existing pipeline with an easement between Lots 51, 52, and 42 of the Plat of Shannonwood from 211th Avenue NE to the north boundary of the Plat of Shannonwood, said extension to be constructed within Sahalee's existing reservoir site to a connection to the 8-inch overflow pipe from the most westerly existing 150,000 gallon reservoir. The connection at the reservoir shall be equipped with a control valve

to allow flow through the intertie to the reservoir upon starting of one or more pumps in the existing Sahalee emergency booster station. A second connection to an existing 6-inch watermain within the Sahalee site shall be made to allow pumping of water from the existing reservoirs through the intertie into Distrit 82's System. This connection shall be manually controlled.

2. Metering Facility

A metering facility shall be located on the intertie pipeline within Sahalee's reservoir site near the boundary of the Plat of Shannonwood. The metering facility shall include a suitable concrete vault with necessary piping vaults and fittings and shall include the existing 4-inch forward and reverse meter purchased jointly by Sahalee and District 82 and originally intended for installation at an intertie at 216th Avenue NE.

3. Telemetry and Control Equipment

This intertie is to be used solely as an emergency facility and no telemetry or automatic control of its use is necessary.

B=3__226th_PLACE_NE_INTERTIE

1. Watermain Connection

The connection is to be made on 226th Place NE at the common boundaries of the Plats of The Country and Green Acres (approximately NE 20th Street). Existing 8-inch watermains of Sahalee and District 82 each currently terminate in close proximity to the point of this intertie.

2. Metering Facility

A metering facility shall be located on the 8-inch watermain intertie on 226th Place NE at or near the common boundary of the Plats of Green Acres and The Country. The exact location to be determined based on suitable, available space within the right-of-way for its installation. The metering facility shall include a buried concrete vault containing a meter or meters for measuring flow in each direction through the intertie, valves, fittings, and related necessary appurtenances.

3. Telemetry and Control Equipment

This intertie will initially be used as an emergency backup to 216th Avenue NE. The intertie will normally be valved closed and will be manually activated in the event the 216th Avenue NE intertie must be removed from operation. Future need for increased hydraulic capacity over that which is provided by one intertie (216th Avenue NE) may require the continuous use of this or another future intertie. The coversion of this intertie to continuous use will require installation of telemetry equipment similar to that provided initially at 216th Avenue NE. Sahalee and District 82 will each be independently

responsible for determining the equipment necessary to their monitoring and control requirements and for its purchase and installation.

EXHIBIT C

OWNERSHIP OF INTERTIES

The following ownership interest shall apply to each of the three interties as described in Exhibit B.

1. Watermain Connections

Sahalee and District 82 shall be the sole 100 percent owner of that portion of the watermains constructed in each intertie which lies within the service area of each Party. This ownership interest shall include all watermain, valves, fittings, and related appurtenances from the points of connection to each Party's own Water System to the point of connection to the Jointly owned metering facility. Each Party shall be responsible for the operation, maintenance, repair, and replacement of the watermain connection in its ownership Jointly constructed under

this Agreement and to assure its continued operation and function necessary to the purpose of this Agreement.

2. Metering Facilities

Sahalee and District 82 shall each own a 50 percent undivided interest in the metering facility to be jointly constructed at each of the three interties. The metering facility shall include the vault; water meter or meters; watermain connections to the vault; all piping, valves, fittings, and other appurtenances internal to the vault; electrical service, panel, and wiring if any; all drain lines internal and external to the vault; and all other items necessary and provided for the proper functioning of the metering facilities. The telemetry and/or control equipment and its communication wiring provided under the joint construction and located within or adjacent to the metering facility shall not be considered a part of the metering facilities.

3. Telemetry and Control Equipment

Additions and improvements to each of the Party's existing telemetry and control equipment provided for and jointly constructed shall become a part of the solely owned telemetry and control system of each Party. Each Party shall be solely responsible for the operation, maintenance, repair, and replacement of these additions and improvements and to assume their continued operation and function necessary to the purpose of this Agreement.

EXHIBIT D

COSTS OF JOINT CONSTRUCTION OF INTERTIES

D-1 CONSTRUCTION COSTS

The costs of construction of the interties shall include the following:

1. Engineering consultant contract costs for environmental compliance; design and preparations of construction plans; specifications and contract documents; assistance in bidding, bid evaluation, and contract award; contract administration including review and certification of progress payments; construction inspection, testing, and certification of completion; preparation of as-constructed plans; and preparation of operation and maintenance manual, if required.

2. Legal costs related to the review of contract documents, representation

in contract disputes, and such other services necessary to the interest of the Parties in the construction of the improvements.

3. Bid advertisement costs.

4. Contract costs for furnishing and installing the improvements in accordance with the contract plans, specifications, and documents inlcuding approved change orders and all related sales tax.

5. Costs of the procurement and purchase of lands or rights-of-way necessary to the installation of the improvements, if any.

6. Costs of King County right-of-way permits and inspection.

7. Costs heretofore expended for materials or for improvements to be incorporated in the facilities to be constructed, such as the existing meter jointly purchased and the existing watermain installed in the Plat of Shannonwood from the street to the boundary of the Sahalee reservoir site. Such costs shall be limited to the actual expense of the Parties.

8. Any other necessary or related costs approved by the Control Board and/or the legislative bodies of the Parties.

D-2 ADMINISTRATIVE COSTS

The administrative costs shall be limited to the actual out-of-pocket expense and the time spent at the hourly rates established in Exhibit E of this Agreement. The anticipated administrative expense include the following:

1. Costs of the application for processing and administration of any Federal, State, or local grant applied for and/or secured on behalf of the Parties for defraying a portion or all of the costs of construction.

2. costs for the processing payment and accounting of all receipts and disbursements from the Joint construction fund.

3. Preparation of monthly and final reports on the costs, receipts, and disbursements.

4. Any other necessary or related costs approved by the Control Board and/or the legislative bodies of the Parties.

EXHIBIT E

HOURLY RATES FOR PERSONNEL AND EQUIPMENT

PERSONNEL	HOURLY RATE
Manager	$25.00
Foreman	18.00
Utility Serviceman I	14.00
Utility Serviceman II	13.00
Bookkeeper	13.00
Secretary	13.00

EQUIPMENT

Pickup	3.00
Van	3.00
Dump Truck	16.00
Backhoe	20.00

Robin

File 1253.02

AGREEMENT FOR
WATER SERVICE THRU
INTERTIE

THIS AGREEMENT made by and between UNION HILL WATER ASSOCIATION, INC., hereinafter referred to as "UNION HILL" and CASCADE VIEW WATER AND SEWER DISTRICT, hereinafter referred to as "CASCADE VIEW" as follows:

In consideration of the mutual promises of the parties to this Agreement it is agreed as follows:

1. That UNION HILL agree to provide CASCADE VIEW seventy thousand (70,000) gallons per day (gpd) interruptible water supply through the intertie between UNION HILL and CASCADE VIEW during the peak summer months. The term "interruptible water supply" shall mean that UNION HILL shall have the right to interrupt the transmission of water to CASCADE VIEW in the event, in the opinion of UNION HILL'S Manager, that continued water service to CASCADE VIEW will jeopardize the available water supply to adequately serve UNION HILL'S customers.

2. The above available gpd shall not apply during non peak or non critical water use periods in that additional water, up to 150,000 gpd, will be made available to CASCADE VIEW which will enable CASCADE VIEW to rest their well. This non peak use will be subject to change based upon a full evaluation of the affect of this use upon UNION HILL'S distribution system and source(s).

3. It will not be necessary for CASCADE VIEW to install a master meter at this time. A meter will be required in the future after a full trial of the systems operating together. CASCADE VIEW shall supply UNION HILL a monthly summary of all water used at the house meters and the water and/or days pumped at CASCADE VIEW well.

4. CASCADE VIEW shall pay UNION HILL $.50 per 100 cf for water transmitted pursuant to this AGREEMENT so long as UNION HILL is able to supply all water for both entities from its existing well source(s). In the event that UNION HILL must use City of Redmond water through the Union Hill/Redmond intertie the billing rate will be adjusted to reflect the rate that Redmond charges UNION HILL plus the additional pumping/operating costs.

5. CASCADE VIEW and UNION HILL mutually agree to indemnify and save harmless each other from and against any and all claims, suits, losses, damages or expenses relating to the death of or injury to any third party or the loss of or damage to any third party's property to the extent caused by the negligence of the party against whom indemnification is sought, its agents or employees, arising out of the performance by such party of its obligations under this Agreement. The foregoing indemnification is conditioned upon the receipt by the indemnifying party of (1) prompt written notice following the occurrence of any event which may give rise to a claim for indemnification hereunder; (2) the opportunity to conduct the defense or settlement of any claim to be indemnified; and (3) the complete cooperation of the parties in such defense.

THIS AGREEMENT shall be considered an interim operating agreement for a period of ninety (90) days until such time that the operating parameters between the entities can be fully assessed and a final permanent agreement can be prepared, reviewed and/or modified by either UNION HILL or CASCADE VIEW through mutual discussion and understanding.

DATE this _____ day of _____, 1990.

UNION HILL WATER ASSOCIATION, INC.	CASCADE VIEW WATER AND SEWER DISTRICT
By _____	By _____
By _____	By _____

AGREEMENT FOR EMERGENCY INTERTIE

This agreement ("Agreement") is made by and between the Sammamish Plateau Water and Sewer District, a municipal corporation ("District"), and the Ames Lake Water Association, a nonprofit water association ("Ames Lake"), (individually a "Party" and collectively the "Parties") for the purposes set forth herein.

SECTION I: RECITALS

1.01 District and Ames Lake are the owners and operators of public water systems and are engaged in the distribution of water to consumers in King County. The District's corporate and service area boundaries are located adjacent to Ames Lake's service area boundary.

1.02 Ames Lake now desires to obtain a supplemental source of water supply for emergency purposes and the District is now willing to allow an emergency intertie between the District and Ames Lake's water systems for such purpose subject to certain terms and conditions.

1.03 The State of Washington, Department of Health ("DOH"), encourages interties between water systems to improve the reliability of public water systems, enhance their management and more efficiently utilize limited water resources.

1.04 In consideration of the terms and conditions contained herein, the Parties now agree as follow.

SECTION II: EMERGENCY INTERTIE

2.01 The purpose of this Agreement is to provide for an emergency intertie between the water distribution systems of each Party to allow Ames Lake access to District water supply in the event of an emergency.

2.02 The District agrees to allow Ames Lake an emergency standby source of water through an intertie connection between the District and Ames Lake water systems at the location as described and depicted on Exhibit "A" attached hereto and incorporated herein by this reference ("Intertie"). The Intertie is specifically described in Section 2.08 below. The Intertie shall be an emergency standby connection, and water shall only be drawn through the Intertie when an emergency occurs. An emergency shall be considered any event including, but not limited to, power outages, a pump system failure or failure in the Ames Lake water distribution system which impairs the capacity or ability of Ames Lake to maintain its system water capacity for fire protection purposes or public consumption. An emergency shall terminate at such time as the capacity of the Ames Lake water system is restored to its pre-emergency status.

2.03 Ames Lake shall be responsible for the design, permitting and construction of the Intertie at its sole cost and expense. Following the approval and execution of this Agreement by the Parties, Ames Lake shall enter into a developer extension agreement ("Extension Agreement") with the District, providing for the design, permitting and construction of the Intertie subject to the District's review and approval and the terms and conditions set forth in the

Extension Agreement. Ames Lake shall complete the installation of the Intertie within Two (2) years of the Effective Date of this Agreement. The District shall own and be responsible for the maintenance of the District owned portion of the Intertie, as described in Section 2.08 below, following its installation by Ames Lake and final acceptance by the District pursuant to the Extension Agreement.

2.04 After the District's final acceptance and ownership of the District owned portion of the Intertie, as described in Section 2.08 below, Ames Lake shall notify the District in writing at least forty-eight (48) hours in advance of the date and time Ames Lake desires to receive water from the District through the Intertie. In case of emergency need by Ames Lake, District shall provide water immediately upon oral notification of such emergency. Follow-up written notice of such emergency request shall be made by Ames Lake to District.

2.05 Ames Lake shall pay District for all water delivered through the Intertie, including flushing water, at the District's then current single-family lowest block water rate. The District shall bill Ames Lake on a bi-monthly basis for the amount of water delivered to Ames Lake through the Intertie, and Ames Lake shall pay the District for such water and payments shall be made by Ames Lake to the District within thirty (30) days of the date of such billing. Any District billings not paid by Ames Lake within such thirty (30) day period shall accrue interest at the rate of 12 percent per annum until paid.

2.06 District shall use reasonable efforts to provide an uninterrupted supply of water to Ames Lake, provided the District shall not be liable for any shortage or interruption in the delivery of water to Ames Lake through the Intertie. In addition, District shall not be liable for any failure, interruption or shortage of water, or any loss or damage resulting therefrom by Ames Lake or any of its members therefrom occasioned by any cause beyond the control of District. District does not guarantee the availability of water to Ames Lake through the Intertie at all times because of the District's needs and water demand. Further, during critical water shortage periods as determined by the District, the District may close the Intertie until the District deems sufficient water supply exists to make such available to Ames Lake. In the event the District declares and/or imposes water usage restrictions within the District, Ames Lake agrees to adopt and impose water usage restrictions no less restrictive than those adopted by the District as a pre-condition to receiving District water through the Intertie.

2.07 All water purchased by and delivered to Ames Lake hereunder shall only be resold by Ames Lake to its members/customers within Ames Lake's water service boundary for use therein.

2.08 All water delivered to Ames Lake shall pass through the Intertie and shall be measured by metering equipment. The Intertie includes a vault within which is located a water meter, valve and pressure reducing valve (PRV). The District shall own, operate, and maintain the meter and valve and all water main up to the meter and valve. Ames Lake shall own, operate, and maintain the vault, the portion of main from the valve within the vault to the PRV, the PRV and the main that exits the PRV. Ames Lake hereby grants District access to the vault in order to maintain and operate the meter and valve.

2.09 Only District personnel shall operate the Intertie valve. Ames Lake shall notify the District when flushing or when there is a need for emergency water supply through the Intertie; in such event, the District's personnel shall operate the Intertie valves for opening and closing the Intertie. Ames Lake shall be responsible for the flushing the Intertie on a bi-monthly basis to ensure water quality.

2.10 Each Party shall, with respect to its duties, responsibilities and operations hereunder, comply with all applicable laws, rules and regulations governing the same. If required by law or regulation, Ames Lake shall submit construction drawings for the Intertie to DOH for approval and shall be responsible to comply with the requirements of RCW 90.03.383.

SECTION III: GENERAL PROVISIONS

3.01 Each Party shall approve the terms and conditions herein by resolution and provide the other Party with a certified copy of same. Each Party represents to the other that it has the full power and authority to enter into this Agreement.

3.02 In the event that either Party commences any legal action relating to the provisions of this Agreement, the prevailing party shall be entitled, in addition to all other amounts to which it is otherwise entitled in this Agreement, to all costs of litigation, including but not limited to, costs, expert witness and reasonable attorney's fees, including all such costs and fees incurred on appeal.

3.03 The District and Ames Lake agree to hold harmless and indemnify the other Party and its employees and agents from any and all claims, damages, costs, and other liabilities caused by a Party's' sole negligence or a Party's concurrent negligence, but only to the extent of the Party's concurrent negligence, arising by reason of participation in, in connection with, or relating to the performance of this Agreement. In addition, Ames Lake agrees to defend, indemnify, and hold the District harmless from any and all claims, damages, costs, and other liabilities arising out of any use by Ames Lake or its members of any water provided through the Intertie, including emergency use for fire purposes and normal domestic use by member consumption or made by or on behalf of any of Ames Lake's consumers which relate in any way to the District's supply water under this Agreement.

3.04 Ames Lake may not assign its rights and/or duties under this Agreement without the prior written consent of the District, which consent may be withheld by the District in its sole discretion.

3.05 This Agreement shall take effect on the last date that this Agreement has been approved and signed by both the District Board of Commissioners and the Ames Lake Board of Directors ("Effective Date").

3.06 Any notice to be given, document to be delivered, or payment to be made by either Party to the other herein, shall be delivered in person or mailed by certified post and addressed to District or City at the following addresses:

District:	Ronald E. Little, Manager Sammamish Plateau Water and Sewer District 1510 - 228th Avenue S.E. Sammamish, Washington 98075
With a courtesy copy to	John W. Milne Inslee, Best, Doezie & Ryder, P.S. P. O. Box C-90016 Bellevue, Washington 98009-9016
Ames Lake:	Scott Hemingway, General Manager Ames Lake Water Association PO Box 691 Fall City, WA 98024

Either Party may, by written notice to the other, designate a different address or designee.

3.07 This Agreement and the provision of water by the emergency intertie connection may be terminated by the District upon giving Ames Lake thirty (30) days written notice in the event (1) Ames Lake or any of its representatives operate the Intertie valve without the District's prior approval to do so, (2) any public agency or court of law orders the District to terminate and cease such emergency intertie connection, or (3) Ames Lake violates any material term or condition set forth in Section 2 of this Agreement and fails to correct or perform as required such term or condition within thirty (30) days of written notice from the District to do so; provided, notwithstanding the foregoing, this Agreement shall continue in five (5) year terms unless either Party notifies the other Party in writing of its intention to terminate this Agreement by giving sixty (60) days advance written notice prior to each successive five (5) year anniversary date of its intention to terminate the Agreement.

3.08 This Agreement constitutes the entire agreement between the Parties with respect to the subject matter hereof and may be modified only by an agreement in writing signed by both Parties hereto.

3.09 Each Party agrees to comply with all federal, state, and local regulations in the operation of its water system connected to the Intertie which is the subject of this Agreement.

SAMMAMISH PLATEAU WATER AND SEWER DISTRICT ("District")	AMES LAKE WATER ASSOCIATION ("Ames Lake")
By	By
Printed Ron Little	Printed Perry Cole
Its Gen. Mgr Dated 9-16-08	Its President Dated 28 Aug 2008

EXHIBIT A
INTERTIE LOCATION DEPICTION

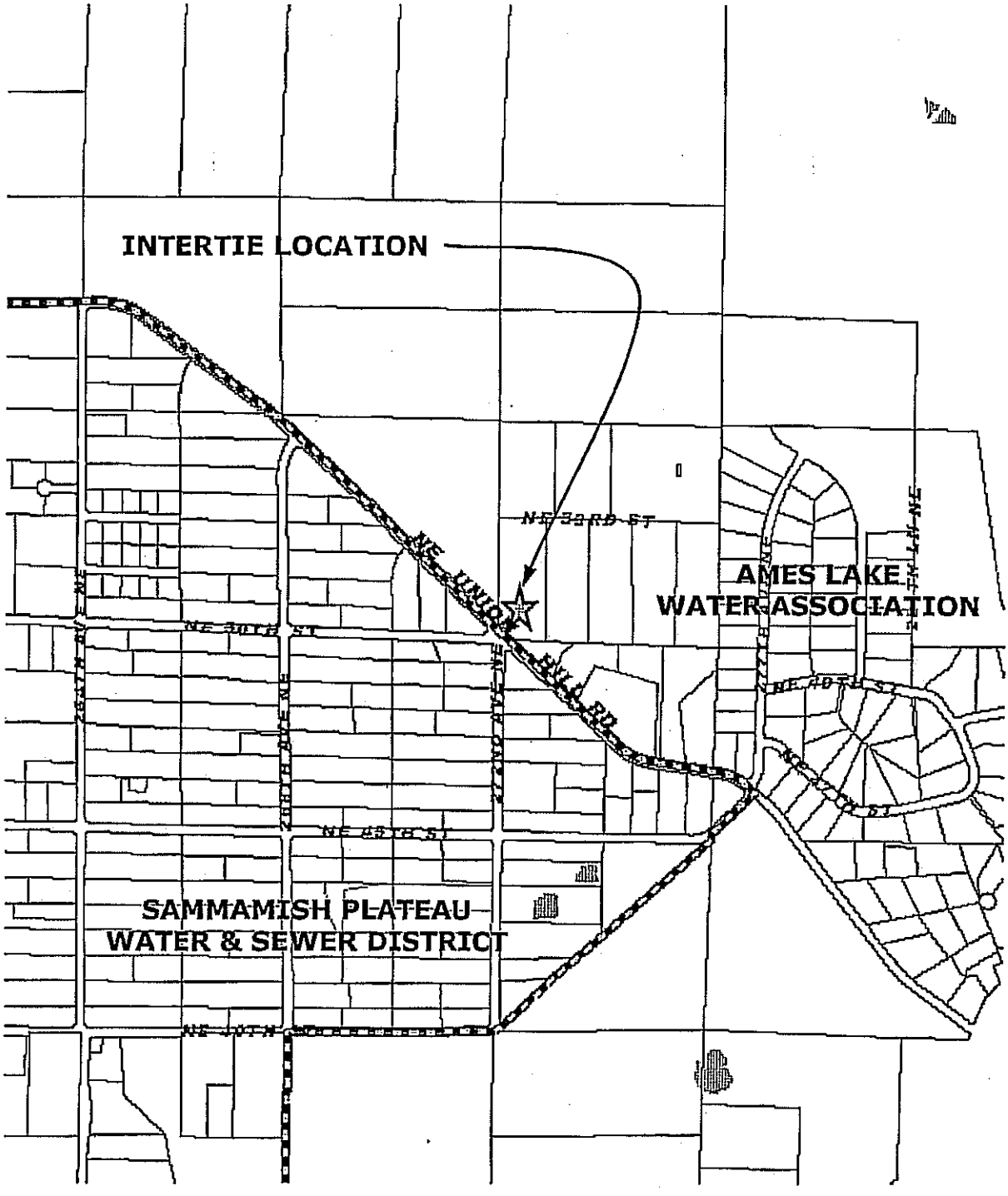

This page intentionally left blank.

SAMMAMISH PLATEAU WATER & SEWER DISTRICT
KING COUNTY, WASHINGTON

RESOLUTION NO. 3745

RESOLUTION OF THE BOARD OF COMMISSIONERS OF SAMMAMISH PLATEAU WATER AND SEWER DISTRICT, KING COUNTY, WASHINGTON, APPROVING AN INTERLOCAL AGREEMENT FOR ESTABLISHMENT OF AN INTERTIE WITH THE AMES LAKE WATER ASSOCIATION.

WHEREAS, pursuant to Title 57 RCW, the Sammamish Plateau Water and Sewer District ("District") supplies potable water to customers within its boundaries through a public water system; and

WHEREAS, pursuant to Title 24.06 RCW, the Ames Lake Water Association ("Ames Lake") supplies potable water to customers within its boundaries through a a member owned non-profit cooperative water system; and

WHEREAS, the District and Ames Lake (collectively the "Parties") have determined that it is in the public interest to enter into an agreement for the provision of emergency water supply to the Ames Lake water service area; and

WHEREAS, Ames Lake is willing to install an intertie and transmission main between the District's and Ames Lake's water distribution systems at Ames Lake's sole cost and pay the District charges for water supplied from the District to Ames Lake, as set forth in an Agreement for Emergency Intertie between the District and Ames Lake, in the form attached hereto as Exhibit A and incorporated herein by this reference ("Intertie Agreement"); and

WHEREAS, the District General Manager has recommended that the District approve and implement the Intertie Agreement; now, therefore,

BE IT RESOLVED, hy the Board of Commissioners of Sammamish Plateau Water & Sewer District, King County, Washington, as follows:

1. The Intertie Agreement in the form attached hereto as **Exhibit A** is hereby approved and the District General Manager, is hereby authorized and directed to execute the Intertie Agreement on behalf of the District.

ADOPTED by the Board of Commissioners of Sammamish Plateau Water and Sewer District, King County, Washington, at a regular open public meeting held on the 15th of September, 2008.

Individual Commissioner's Vote on this Resolution:

Approved: WS
Opposed:
Abstained:
Absent:

Steve Stevlingson
President and Commissioner

Approved:
Opposed:
Abstained:
Absent:

Mary Shustov
Vice President and Commissioner

Approved:
Opposed
Abstained:
Absent

Thomas C. Harman
Secretary and Commissioner

Approved:
Opposed:
Abstained:
Absent:

Lloyd J. Warren
Commissioner

Approved:
Opposed:
Abstained:
Absent:

Robert Brady
Commissioner

Resolution No. 3745

AGREEMENT FOR WATER SYSTEM INTERTIE
BETWEEN THE
CITY OF REDMOND AND THE
SAMMAMISH PLATEAU WATER AND SEWER DISTRICT
(CASCADE VIEW/NOVELTY HILL – NE 80th STREET INTERTIE)

This Agreement ("Agreement") is made and entered into this 11 day of February, 2005 between the Sammamish Plateau Water & Sewer District ("District"), a Washington municipal corporation, and the City of Redmond ("City"), a Washington municipal corporation, (individually a "Party" and collectively the "Parties") for the purposes set forth herein.

W I T N E S S E T H:

WHEREAS, the City is a non-charter, optional municipal code city organized and operating pursuant to Chapter 35A RCW; and

WHEREAS, the District is organized and operating pursuant to Title 57 RCW and is authorized to operate a water system within and without its boundaries; and

WHEREAS, the District has a need for additional water supply to a portion of its service area called the Cascade View Zone, as depicted on Exhibit A, which shall include if annexed to the District in the future, the Dawn Breaker Water Association and the rural portion of the Redmond Ridge East Pan Handle, in addition to all other expansions to this Zone as defined in future District Comprehensive Water Plans; and

WHEREAS, the District and the City are members of the Cascade Water Alliance ("CWA") which provides water supply to its members through a regional water system; and

WHEREAS, the District's Cascade View Zone is not connected to the District's Plateau Zone that will be receiving water directly from CWA; however, the District's water system in the Cascade View Zone may be connected through an intertie to the City's water system, which receives water supply from CWA; and

WHEREAS, CWA is willing to supply water to the District's Cascade View Zone by wheeling such water through an intertie with the City's water system; and

WHEREAS, the District is willing to install an intertie and transmission main between the City's and the District's water distribution systems at the District's sole cost and pay the City a wheeling charge to wheel water from CWA to the District.

NOW, THEREFORE, in consideration of the following terms and conditions, the Parties agree as follows:

1.0 **Purpose.** The purpose of this Agreement is to provide an intertie between the distribution systems of each party to allow the District with access to the CWA water supply.

2.0 **Description of Intertie.** The Cascade View/Novelty Hill – NE 80th Street intertie ("Intertie") shall be constructed by the District at its sole cost and operated by the Parties under the terms of this Agreement. The Intertie shall be as follows:

2.1 The Intertie shall allow the District to obtain water, wheeled through the City's distribution system, from the regional system in accordance with the District's contract with CWA.

2.2 The Intertie shall consist of a connection to the City's existing distribution system within Redmond Ridge Road near its intersection with NE 80th Street, and a Metering Vault to measure total flow and prevent the flow of water from the District's water system into the City's water system.

2.3 The District shall install the Metering Vault within 200-feet of their connection to the City's system.

2.4 The Intertie shall have a normal operating capacity of 200-gpm, for approximately 160 acre/feet per year of CWA water to supplement the District's ground water supplies and a short term maximum capacity of 400-gpm as needed when the District's two production wells are out of service.

2.5 The District shall be responsible for increasing the water pressure of the water supplied by the City as necessary to the required operating pressures of the District's Cascade View Zone. The District's installation of a

booster station to provide the pressure increase shall be on the District's side of the Intertie.

3.0 Construction.

3.1 The District shall undertake the Intertie through a wet tap of the City's existing 12-inch water main north of the City's emergency intertie with the Union Hill Water Association's water system located at Redmond Ridge Drive and NE 80th Street as depicted on Exhibit A (the "Union Hill Intertie").

3.2 The Intertie shall only provide flow to the District and will not be designed or constructed to provide flow from the District to the City.

3.3 The District shall be responsible for the installation of a Metering Vault that will contain a 4-inch flow meter to measure the quantity of water provided to the District by the City and a check valve to prevent water flow from the District to the City.

3.4 The District shall install a control valve and any necessary booster pumps on the District's side of the Metering Vault to maintain a set rate of flow that is manually or remotely adjustable.

3.5 The District's responsibilities shall include, but not be limited to, design, preparation of permit applications, project administration, construction and construction inspection for the Intertie.

3.6 The City's responsibilities shall include review of the plans and specifications for the Intertie and review of applicable permit applications.

3.7 The plans and specifications for the Intertie construction shall meet or exceed the construction standards of the District, as the owner of such intertie and shall be subject to review and approval of the City. The City shall have the right to inspect all work on the Intertie at all reasonable times to assure conformance with approved plans and specifications.

5.0 Construction Schedule. The District shall complete the installation of the Intertie within sixty (60) days of the effective date of this Agreement.

6.0 **Intertie Project Costs.** The term "cost" as used in this section shall include, without limitation, all actual costs of labor, materials, permitting, equipment, engineering, inspection, right-of-way, legal costs, publication, SEPA compliance and any costs customarily incurred in such projects. The District shall pay and be solely responsible for all costs for the Intertie.

7.0 **Ownership.** The District shall own the Intertie.

8.0 **Maintenance.** The District shall maintain the Intertie in good working order in accordance with sound maintenance procedures, good engineering practices and applicable laws, rules and regulations Maintenance shall include meter calibration, to be performed no less frequently than every 2 years from the date of installation of the meter.

9.0 **Destruction and Replacement.** District shall be responsible to repair and replace all or any part of the Intertie in the event of its partial or total damage, loss or destruction at District's sole cost and expense.

10.0 **Notification, Use, and Payment.**

10.1 **Notification.**

10.1.1 The District shall provide the City with notification by CWA stating that water is available for the District's use at Cascade's meter that serves Redmond's Novelty Hill Service Area.

10.1.2 The District shall provide the City with 48-hours notice prior to the start of any use of the Intertie to deliver water from the City to the District. The District shall notify the City of the anticipated rate of flow that is to be received and for what period of time the flow is to be maintained. The District shall notify the City with 24-hours notice prior to changes in the District's rate of flow that will

impact the rate of flow that the City takes from the Tolt Supply System.

10.1.3 The District shall notify the City with 48-hours notice prior to discontinuing the use of the intertie.

10.1.4 The District shall maintain continuous reading of the rate of flow and weekly readings of the total quantity of water received from the City, and shall provide the City with copies of such reports.

10.1.5 The District shall provide the City and CWA with monthly reports showing the usage for each calendar month plus an unaccounted water loss factor of 2% of the monthly use.

10.1.6 The City shall give the District 48-hours notice prior to any operations that may impact the District's use of the Intertie, including but not limited to watermain shutdowns that reduce or eliminate the supply to the Intertie, changes in operating pressure by more than 20 pounds per square inch, introduction of chemicals other than chlorine and fluoride and construction activities in the immediate vicinity of the Intertie.

10.1.7 In the case of an emergency, where unforeseen circumstances of a short duration result from a failure of the District's water system equipment or piping that necessitates transfer of water to meet life safety demands and satisfy minimum levels of service for customers, the District shall be allowed immediate use of the Intertie as long as immediate notification is provided to the City stating the anticipated rate of flow that is to be received and for what period of time the flow is to be maintained.

10.1.8 In the case of an emergency, where unforeseen circumstances of a short duration result from a failure of the City's water system equipment or piping that impacts the ability of the City to provide the District with water, the City shall be allowed to shut down the Intertie as long as immediate notification is provided to the District stating the duration of the emergency and immediate notification is

provided to the District as soon as the City's water system operations are restored such that the Intertie is safe to operate.

10.2 **Use.**

10.2.1 The District shall be allowed use of the Intertie as needed in accordance with the terms of this agreement, at the District's sole discretion, to obtain water provided to the District under its contract with CWA. This use and discretion is limited and Redmond only agrees to wheel water to the District that is in excess of the City's demand if Seattle or CWA limits flow rates at the CWA meter serving Redmond's Novelty Hill service area.

10.2.2 A normal operating flow of 200-gpm shall be allowed to meet its Cascade View Zone's system demands for an estimated 160 acre/feet of water per year.

10.2.3 A maximum flow of 400-gpm shall be allowed for up to 8-week to support the Cascade View system demands when both wells have been taken out of service.

10.3 **Payment for Water Delivered.**

10.3.1 The District shall pay directly to CWA for water wheeled through the Intertie to the District at CWA rates in effect at the time of the sale and delivery of the water to the District.

10.3.2 The District shall pay directly to the City a Wheeling charge for the water delivered to the District through the Intertie at fixed and variable rates set through the City's rate setting processes and established by resolution of the City.

10.3.3 The City shall read the meter and invoice the District for the Wheeling charge associated with the water delivered to the District through the Intertie. The City shall own, install, operate and maintain any radio read system required for reading of the meter other then the District's Remote Read Head.

11.0 General.

11.1 **Duration.** The parties acknowledge and agree: (1) that the use of the Intertie is essential to the operations of District in providing water service to its customers; and, (2) that District will rely upon the continued existence of the Intertie and rights of usage granted hereunder in its long range planning and issuing bonds, notes and other financing documents. Thus, each Party covenants and agrees with the other not to interfere with the other's rights granted hereunder; not to violate applicable laws, rules and regulations of agencies with regulatory jurisdiction over the parties; and not to take any action inconsistent with this Agreement.

11.2 **Termination.** This Agreement may be terminated through 2-month written notice by the District, 2-years written notice by the City, or the termination of either parties membership in CWA.

11.3 **Not a Partnership.** This Agreement shall not constitute or create a partnership or a joint venture.

11.4 **Compliance with Laws and Regulations.** Each Party shall, with respect to its duties, responsibilities and operations hereunder, comply with all applicable laws, rules and regulations governing the same. The District shall submit construction drawings for the Intertie to the Washington State Department of Health for approval and shall be responsible to comply with the requirements of RCW 90.03.383.

11.5 **Specific Performance.** In addition to all other remedies available to a party hereunder, whether in law or equity, each party to this Agreement shall have the right to seek and obtain specific performance of the terms hereof. The parties agree that damage occurring by reason of the breach

hereof is difficult, if not impossible, to ascertain and that remedies of law are inadequate.

11.6 **Assignment.** Neither party shall have the right in whole or in part to assign this agreement or its rights and obligations hereunder or its interest in the Intertie without prior written consent of the other party, which shall not be unreasonably withheld, delayed, or conditioned.

11.7 **Authority.** This Agreement is entered into by the parties hereto pursuant to the authority contained in RCW 35.67.300, RCW 39.34.080 and RCW 57.08.005.

11.8 **Attorney's Fees.** If a suit or other action is instituted in connection with any controversy arising out of this Agreement, the prevailing party shall be entitled to recover all of its costs and expenses including such sum as the court may judge reasonable for attorneys' fees, including fees upon appeal of any judgment or ruling.

11.9 **Non Waiver.** No waiver by either party of any term or condition of this Agreement shall be deemed or construed as a waiver of any other term or condition or of any breach hereof, whether pertaining to the same or a different provision of this Agreement.

11.10 **Severability.** If any section, subsection, sentence, clause, phrase, or other portion of this Agreement is, for any reason, declared invalid, in whole or in part of any court or agency of competent jurisdiction, said decision shall not affect the validity of the remaining portions hereof.

11.10 **Indemnity.** Each Party agrees to indemnify, defend and hold harmless the other party, its officers, agents, and employees, from and against any and all claims, losses, or liability, for injuries, sickness or death of persons, or

damage to property, arising out of any willful misconduct or negligent act, error, or omission of the indemnifying party, its officers, agents, subcontractors or employees, in connection with actions taken pursuant to this Agreement. Provided, however, that the indemnifying party's obligations to indemnify, defend and hold harmless for injuries, sickness, death or damage caused by or resulting from the concurrent negligence or willful misconduct of the indemnitee and the indemnifying party, or of the indemnifying party and a third party other than an officer, agent, subcontractor or employee of the indemnifying party, shall apply only to the extent of the negligence or willful misconduct of the indemnifying party.

12.0 **Execution of Documents.** Each Party agrees to execute any and all documents and instruments necessary to give effect to and carry out the terms of this Agreement and to obtain the necessary approval of the same by government agencies as required by law.

13.0 **Effective Date.** This Agreement shall be effective upon the approval of the Agreement by the legislative bodies of both Parties and the execution of the Agreement by the Parties' authorized representatives.

SAMMAMISH PLATEAU WATER & SEWER DISTRICT

BY _____

Ronald E. Little, General Manager

Date 1-26-05

CITY OF REDMOND

BY _____

Date 2.11.05

ATTEST:

BY _____

Susan A. Tucker, Notary Public

Date 1/26/05

Notary Public
State of Washington
SUSAN A. TUCKER
My Appointment Expires Apr 1, 2006

ATTEST:

BY _____

Bonnie Matson, City Clerk

Date 2/14/05

APPROVED AS TO FORM:

BY _____

John Milne, District's Attorney

Date 1/26/05

APPROVED AS TO FORM:

BY _____

Date 2/10/05

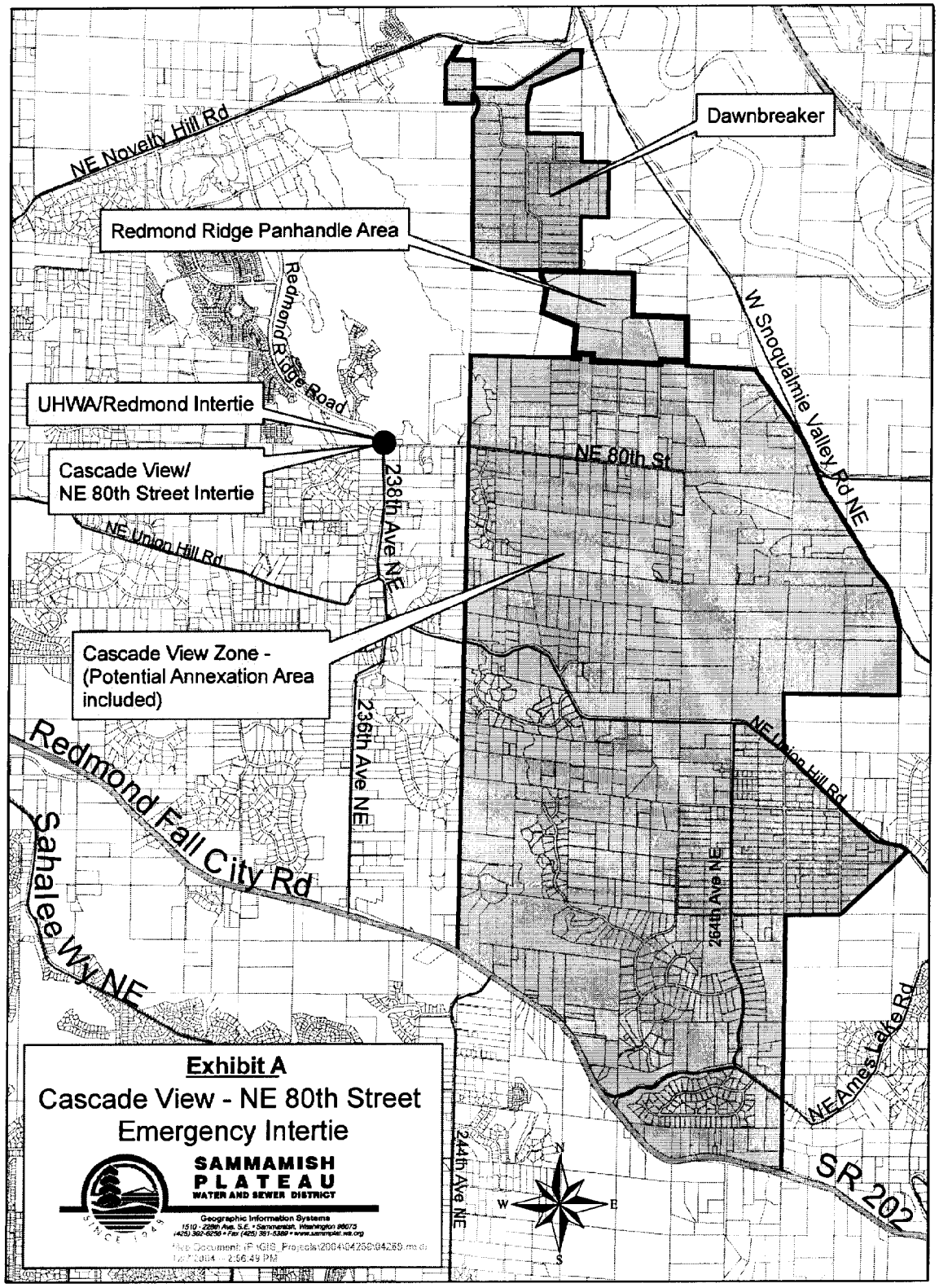
Dawnbreaker
NE Novelty Hill Rd
Redmond Ridge Panhandle Area
Redmond Ridge Road
W Snoqualmie Valley Rd NE
UHWA/Redmond Intertie
Cascade View/
NE 80th Street Intertie
NE 80th St
238th Ave NE
NE Union Hill Rd
Cascade View Zone -
(Potential Annexation Area
included)
236th Ave NE
NE Union Hill Rd
Redmond Fall City Rd
Sahalee Wy NE
264th Ave NE
NE Ames Lake Rd
244th Ave NE
SR 202
N
W
E
S
Exhibit A
Cascade View - NE 80th Street
Emergency Intertie
SAMMAMISH
PLATEAU
WATER AND SEWER DISTRICT
SINCE 1948
Geographic Information Systems
1510 - 228th Ave. S.E. • Sammamish, Washington 98075
(425) 392-6256 • Fax (425) 391-5389 • www.sammamish.wa.org

This page intentionally left blank.

Appendix E

Future Water Connection Agreement

This page intentionally left blank.

SAMMAMISH PLATEAU WATER & SEWER DISTRICT
KING COUNTY, WASHINGTON

RESOLUTION NO. 4762

RESOLUTION OF THE BOARD OF COMMISSIONERS OF SAMMAMISH PLATEAU WATER AND SEWER DISTRICT, KING COUNTY, WASHINGTON, APPROVING A FORM AGREEMENT FOR FUTURE CONNECTION FOR WATER SERVICE ASSOCIATED WITH A GROUP B PUBLIC WATER SYSTEM, AND RESCINDING PREVIOUSLY APPROVED FORM SATELLITE WATER SYSTEM AGREEMENTS.

WHEREAS, the Sammamish Plateau Water and Sewer District ("District") is a municipal corporation providing water and sewer utility services pursuant to Title 57 RCW; and

WHEREAS, the District's future water service area ("Future Water Service Area") is established through the District's water comprehensive plan as approved by governmental agencies with jurisdiction, the East King County Coordinated Water System Plan ("EKCCWSP"), and as modified by boundary changes mutually agreed to by adjacent utilities for inclusion in future EKCCWSP updates; and

WHEREAS, the District requires that the owners of property seeking District water service connect their property directly to the District's water system and obtain water service from the District, and the EKCCWSP limits the ability of new Group B public water systems to be developed within the District's Future Water Service Area; and

WHEREAS, there are areas within the District's Future Water Service Area where it is not feasible or reasonable to have a direct connection for water service from the District in a timely and reasonable manner, and the District Board of Commissioners desires to establish policies under which a new Group B public water system may be formed to provide water service to identified property until direct connection to the District's water service is timely and reasonably available as determined by the District; and

WHEREAS, the District adopted form Satellite System Management Agreements by motion on July 10, 1989, and updated said form Satellite System Management Agreements by Resolution No. 2179 adopted on October 7, 1997, and further approved the policy for use of Satellite System Management Agreements as described in Section 1.9 and Appendix G of the District's 2010 Water Comprehensive Plan as adopted by Resolution No. 4143 on April 2, 2012; and

WHEREAS, the District Board of Commissioners now desires to revise the District's policy regarding the establishment of new Group B Public Water Systems within the District's Future Water Service Area, adopt a new form agreement for development and use of new Group B Public Water Systems within the District's Future Water Service Area until water service by direction connection is available, and rescind the previously approved form Satellite System Management Agreements; now, therefore,

BE IT RESOLVED, by the Board of Commissioners of Sammamish Plateau Water & Sewer District, King County, Washington, as follows:

1. The Agreement for Future Connection for Water Service Associated with a Group B Public Water System in the form attached hereto as **Exhibit A** and incorporated herein by this reference is hereby approved for use where direct connection of property to the District's water system is not timely and reasonable as determined by District staff and the use of a Group B Public Water System is proposed.

2. The Satellite Water System Agreement forms previously approved by the District Board of Commissioners on October 7, 1997, by Resolution No. 2179 and through the 2010 Water Comprehensive Plan are hereby rescinded.

3. All District resolutions, policies and procedures, including Resolution No. 2179, are hereby rescinded, superseded and/or modified to be in accordance with this resolution.

4. This Resolution and the form Agreement for Future Connection for Water Service Associated with a Group B Public Water System approved herein shall be effective the date set forth below.

ADOPTED by the Board of Commissioners of Sammamish Plateau Water and Sewer District, King County, Washington, at a regular open public meeting held on the 8th day of January 2018.

Individual Commissioner's Vote on this Resolution:

Approved: ✓
Opposed: _____
Abstained: _____
Absent: _____

Lloyd Warren, President and Commissioner

Approved: _____
Opposed: _____
Abstained: _____
Absent: _____

Mahbubul Islam, Vice President and Commissioner

Approved: ✓
Opposed: _____
Abstained: _____
Absent: _____

Mary Shustov, Secretary and Commissioner

Approved: ✓
Opposed: _____
Abstained: _____
Absent: _____

Tom Harman, Commissioner

Approved: _____
Opposed: _____
Abstained: _____
Absent: _____

Karen Moran, Commissioner

EXHIBIT A

Agreement for Future Connection for Water Service
Associated with a Group B Public Water System

Sammamish Plateau Water & Sewer District
1510 – 228th Ave SE
Sammamish, Washington 98075

AGREEMENT FOR FUTURE CONNECTION FOR WATER SERVICE ASSOCIATED WITH A GROUP B PUBLIC WATER SYSTEM

Reference #'s None

Grantor(s): _____
_____
_____

Grantee(s) Sammamish Plateau Water & Sewer District
1510 228th Avenue SE
Sammamish, WA 98075

Legal Description Section ___, Township ___ North, Range ___ East
Additional legal description is on page ___ of document.

Tax Parcel ID _____

SAMMAMISH PLATEAU WATER AND SEWER DISTRICT
AGREEMENT FOR FUTURE CONNECTION
FOR WATER SERVICE
ASSOCIATED WITH A GROUP B PUBLIC WATER SYSTEM

THIS AGREEMENT ("Agreement") is made by and between the SAMMAMISH PLATEAU WATER AND SEWER DISTRICT, a municipal corporation ("District") and _____ ("Owner") (individually a "Party" and collectively the "Parties") for the purposes set forth below.

SECTION 1: RECITALS

1.01 Owner is the owner of certain real property located in King County and legally described on **Exhibit A** attached hereto and incorporated herein by this reference ("the Property"). The Property is located within the District's present and/or future water service area. However, the District has determined it may not be presently feasible, timely or reasonable to extend District water mains to serve the Property.

1.02 The Owner now proposes to install or connect to a Group B public water system to provide water service to the Property.

1.03 The District is considering, at some time in the future, the extension of water facilities to serve the Property. The Parties now desire to set forth the terms and conditions of the Owner's later connection to the District's water system upon such service being available to the Property.

1.04 Therefore, the Parties, in consideration of the following terms and conditions, now agree as follows:

SECTION 2: GROUP B PUBLIC WATER SYSTEM INSTALLATION

2.01 The District hereby approves the establishment of a new Group B public water system ("Water System") to serve the Property under the conditions set forth in this Agreement; provided however, the District reserves the right to (a) protest, object to and/or oppose, any application by the Owner or other parties for water rights to serve the Property if the District determines that such application and proposed appropriation of surface or groundwater will detrimentally or negatively impact the District's existing or previously applied for water rights, and to (b) terminate this Agreement if the District determines that such application and proposed appropriation of surface or groundwater will detrimentally or negatively impact the District's existing or previously applied for water rights.

2.02 The Owner shall design and construct the Water System in accordance with applicable King County Health Department, Washington State Department of Ecology, and Washington State Department of Health standards. The Water System shall include the installation of a master meter on each well and a service meter for each separate lot or dwelling unit to be served by the Water System.

2.03 The Owner shall own and shall be solely responsible for the Water System. The Owner shall have filed on the Property, prior to the installation of the Water System, covenants which identify the Owners' responsibility to contract with a certified water system operator and/or manager for operation, maintenance and repair of the Water System. The system shall be operated

in accordance with all applicable State and local health department rules, regulations, and good utility practice.

2.04 Upon the termination of this Agreement as provided herein, the District, at its sole option, may assume ownership of all water rights, wells, pumps and/or tanks and operate the Water System as part of the District-owned water system. The Owner, or Owner's successors and assigns, shall transfer ownership of the Water System, or such portions of the Water System as designated by the District, to the District by bill of sale at the time of transfer of ownership. In the event of Owner's failure to timely execute and provide such bill of sale to the District, Owner hereby agrees that the President of the District Board of Commissioners may sign the bill of sale for the Owner as the Owner's attorney-in-fact should the Owner fail, refuse or be unable to do so.

SECTION 3: NO-PROTEST OF FUTURE LOCAL IMPROVEMENT DISTRICT (LID) OR UTILITY LOCAL IMPROVEMENT DISTRICT (ULID)

3.01 Owner agrees to participate in and waive protest of formation of an LID or ULID for the purpose of constructing a District water system, including mains, pumps and related improvements to serve the Property. Owner agrees to sign a petition for the formation of an LID or ULID for the above-specified improvements at such time as a petition is circulated or the District requests the Owner to sign such petition. Owner hereby agrees that the President of the District Board of Commissioners may sign the petition for the Owner as the Owner's attorney-in-fact should the Owner fail, refuse or be unable to do so.

3.02 Owner understands that property owners have the right to protest formation of a LID or ULID to construct the above-specified improvements. Owner agrees to waive the right to protest formation of a LID or ULID for construction of the above-specified improvements. Owner shall retain the right to contest the method of calculating any assessment under such LID or ULID as provided by law and shall further retain the right to appeal confirmation of the final assessment roll in the manner provided by law.

3.03 Owner further agrees that the existence of Group B Public Water System for the Property shall not be considered in the calculation of any assessment relating to any such LID or ULID; and any such assessments in relation to special benefit derived by Owner's Property to be served by any such LID or ULID shall be made on the basis that Property does not receive water service.

3.04 Where a LID or ULID is not formed, but there is an extension of permanent water facilities to a point abutting Owner's Property through the provision of other means, including but not limited to, District-initiated construction, developer extension, or other property owners' requests, the undersigned shall connect the Property to such water facilities; and at such time, shall pay the cost of connection to such water facilities as further described in this Agreement.

SECTION 4: NO-PROTEST OF FUTURE ANNEXATION TO DISTRICT WATER SERVICE BOUNDARY

4.01 Owner agrees to participate in and waive protest of annexation of the Property to the District's corporate boundary. Owner agrees to sign a petition for the annexation of the Property at such time as a petition is circulated or the District requests the Owner to sign such petition. Owner hereby agrees that the President of the District Board of Commissioners may sign the petition for the Owner with respect to the Property as the Owner's attorney-in-fact should the Owner fail, refuse or be unable to do so.

4.02 Owner understands that property owners have the right to protest annexation of their property to the District. Owner agrees to waive the right to protest annexation of the Property to the District, provided Owner shall retain the right to contest the method of calculating any assessment for such annexation as provided by law.

SECTION 5: CONNECTION OF PROPERTY TO DISTRICT WATER SYSTEM

5.01 The Owner agrees that, upon notification from the District of the availability of District water service to the Property, such availability as defined by the District in its sole discretion, the Owner shall connect the Property to the District's water system **within one (1) year** of Districts notification to Owner of such water availability. Connection of the Property to the District's water system shall be per District standards and specifications in effect at the time of such connection.

5.02 Upon District's notification to Owner of the availability of District water service, the Owner shall pay to the District all District fees and charges for such water service connection prior to the connection of the Property to the water system. If all or a portion of the fees and charges for such service connection are being assessed against the Property through a LID or ULID, the payment of those fees and charges shall be in accordance with such LID or ULID assessment schedule.

5.03 All fees and charges for connection to the District water system, including, but not limited to, general facility charges, charges for the installation of regional or local water distribution facilities, and water meter installation charges, shall be determined and paid in accordance with District policies, procedures and rates in effect at the time of such connection.

5.04 Owner shall also be required to pay District water service rates and charges for the availability of water service upon the connection of the Property to the District water system or **one (1) year** after District's notification to Owner of such water availability, whichever occurs first.

5.05 Upon the connection of the Property to the District Water System, Owner and the Property shall be subject to and shall comply with all District resolutions, policies and procedures regarding the District's provision of such water service.

5.06 Upon the connection of the Property to the District Water System, any parts of the Group B Public Water System not transferred to the District in accordance with Section 2.04 shall be properly abandoned by the Owner, including abandonment of the Group B well(s) to ensure the well(s) is properly abandoned in compliance with Department of Ecology regulations and guidelines.

SECTION 6: GENERAL PROVISIONS

6.01 This Agreement touches and concerns the development of the Property and shall constitute a covenant running with the Property described on **Exhibit A.** This Agreement shall be binding upon Owner, and Owner's heirs, successors in interest and assigns. This Agreement shall be recorded by District with the King County Office of Records and Elections immediately upon its execution by the Parties.

6.02 Any notice to be given, document to be delivered, or payment to be made by either Party to the other herein, shall be delivered in person or mailed by certified post and addressed to District or Owner at the following addresses:

District:	John C. Krauss, General Manager Sammamish Plateau Water and Sewer District 1510 - 228th Avenue S.E. Sammamish, Washington 98075
With a courtesy copy to	John W. Milne Inslee, Best, Doezie & Ryder, P.S. 10900 NE 4th St., Suite 1500 P. O. Box C-90016 Bellevue, Washington 98009-9016
Owner:	_____ _____ _____ _____

Any Party may, by written notice to the other, designate a different address or designee.

6.03 Time is of the essence with respect to this Agreement. In addition to any other remedy provided by law or this Agreement, the terms of this Agreement may be specifically enforced by the Parties. In any suit or actions brought to enforce any provision of this Agreement, the prevailing party shall be entitled to reasonable attorneys' fees and costs in addition to all other costs and damages allowed by law.

6.04 If any section, sentence, clause or phase of this Agreement should be held to be invalid or unconstitutional by a court of competent jurisdiction, such invalidity or unconstitutionality shall not affect the validity or constitutionality of any other section, sentence, clause or phrase of this Agreement.

6.05 This Agreement shall be effective on the date last signed by all of the Parties ("Effective Date").

OWNER	OWNER	SAMMAMISH PLATEAU WATER AND SEWER DISTRICT
By _____	By _____	By _____
Printed _____	Printed _____	Printed _____
Dated _____	Dated _____	Dated _____

STATE OF WASHINGTON)
) ss.
COUNTY OF KING)

I certify that I know or have satisfactory evidence that _____ is the person who appeared before me, and said person acknowledged that he/she signed this instrument, on

oath stated that he/she was authorized to execute the instrument and acknowledged it as the _____ of **Sammamish Plateau Water and Sewer District** to be the free and voluntary act of such municipal corporation for the uses and purposes mentioned in the instrument.

Dated

_____

_____
Notary Public in and for the State of Washington, residing at

_____
My Appointment Expires

_____

STATE OF WASHINGTON)
) ss.
COUNTY OF KING)

I certify that I know or have satisfactory evidence that _____ is the person who appeared before me, and said person acknowledged that he/she signed this instrument, on oath stated that he/she was authorized to execute the instrument and acknowledged it as the _____ of _____ to be the free and voluntary act of such corporation for the uses and purposes mentioned in the instrument.

Dated

_____

_____
Notary Public in and for the State of Washington, residing at

_____
My Appointment Expires

_____

STATE OF WASHINGTON)
) ss.
COUNTY OF KING)

I certify that I know or have satisfactory evidence that _____ is the person who appeared before me, and said person acknowledged that he/she signed this instrument, on oath stated that he/she was authorized to execute the instrument and acknowledged it as

the _____ of _____ to be the free and voluntary act of such corporation for the uses and purposes mentioned in the instrument.

Dated

_____

_____

Notary Public in and for the State of Washington, residing at

_____

My Appointment Expires

_____

EXHIBIT A

TAX PARCEL

This page intentionally left blank.

Appendix F
Design Standards

This page intentionally left blank.

SAMMAMISH PLATEAU WATER & SEWER DISTRICT
KING COUNTY, WASHINGTON

RESOLUTION NO. 4738

RESOLUTION OF THE BOARD OF COMMISSIONERS OF SAMMAMISH PLATEAU WATER AND SEWER DISTRICT, KING COUNTY, WASHINGTON, AUTHORIZING AND APPROVING THE FORM DISTRICT DEVELOPER EXTENSION AGREEMENT AND DISTRICT STANDARD TECHNICAL SPECIFICATIONS

WHEREAS, parties desiring to undertake certain land use actions, such as subdivision of, development of, and construction upon real property within the Sammamish Plateau Water and Sewer District ("District") requiring the extension of the District's water and/or sewer utility systems have been required to do so by developer extension agreement with the District pursuant to Chapter 57.22 RCW; and

WHEREAS, the District, by adoption of Resolution No. 4333 on April 7, 2014, updated, revised and readopted a form developer extersion agreement and associated fee schedule; and

WHEREAS, District staff has updated and revised the portion of such form developer extension agreement entitled District Technical Specifications, in the form included in "Exhibit A" and incorporated herein by this reference; now, therefore,

BE IT RESOLVED, by the Board of Commissioners of Sammamish Plateau Water & Sewer District, King County, Washington, as follows:

1. The developer extension agreement for construction extensions to the District's water and sewer systems in the form attached hereto as Exhibit "A" is hereby approved and adopted for use in the District effectifve the date of the adoption of this resolution.

2. All District resolutions, policies, and procedures, including Resolution No. 4333 are hereby susperseded, rescinded and modified to be in accordance with such amendment to the form developer extension agreement.

3. This resolution and the policies and procedures set forth herein shall be effective the date set forth below.

ADOPTED by the Board of Commissioners of Sammamish Plateau Water and Sewer District, King County, Washington, at a regular open public meeting held on the 9th day of October 2017.

Individual Commissioner's Vote on this Resolution:

Karen Moran, President and Commissioner

Mahbubul Islam, Vice President and Commissioner

Mary Shustov, Secretary and Commissioner

Tom Harman, Commissioner

Lloyd Warren, Commissioner

Sammamish Plateau Water®

DISTRICT TECHNICAL SPECIFICATIONS

OWNER

Sammamish Plateau Water and Sewer District

1510 - 228th Avenue SE

Sammamish, Washington 98075

(425) 392-6256 FAX (425) 391-5389

Revised October 2017

TECHNICAL SPECIFICATIONS

TABLE OF CONTENTS

PART ONE - DESIGN STANDARDS 1-1

SECTION 1.1 - WATER SYSTEMS 1-1

A. Watermain Extension 1-1
B. Main Location 1-1
C. Easements 1-1
D. Location of Line within Street Corridor 1-1
E. Water Line Cover 1-2
F. Separation Between Other Utilities 1-2
G. Line Size 1-2
H. Pipe Material 1-2
I. Dead-end Water Lines 1-2
J. Blocking on End of Mains 1-2
K. Connection to Existing Mains 1-2
L. Fitting Material 1-3
M. Multiple Fitting 1-3
N. Lines Entering/Exiting Structures 1-3
O. Pipe Anchors 1-3
P. Hill Holders 1-3
Q. Fire Hydrant Location 1-3
R. Fire Hydrant Line Size 1-3
S. Hydrant Guard Posts 1-3
T. Valve Type 1-3
U. Valve Locations 1-4
V. Blow-offs 1-4
W. Air and vacuum release valves 1-4
X. Meters 1-4
Y. Service Lines 1-6
Z. Backflow Prevention 1-7
AA. Fire Sprinkler Lines 1-7
BB. District Sampling Stations 1-7

SECTION 1.2 - SANITARY SEWER SYSTEMS 1-8

A. Sewer Extension 1-8
B. Design Criteria 1-8
C. Sewer Flow 1-8
D. Storm/Surface/Ground Water Restrictions 1-8
E. Main Location 1-8
F. Easements 1-8
G. Location of Line within Street Corridor 1-8

H. Sewer Line Depth 1-9
I. Separation Between Other Utilities 1-9
J. Line Size 1-9
K. Pipe Material 1-9
L. Gravity Pipe Grade 1-10
M. Hill Holders. 1-10
N. End of Sewer Mains. 1-10
O. Manhole Location 1-10
P. Manhole Size. 1-10
Q. Direction Change through Manholes 1-10
R. Manhole Channels. 1-10
S. Transition Manholes 1-11
T. Manhole Lining 1-11
U. Manhole Cone. 1-11
V. Manhole Access Roads 1-11
W. Gravity Side Sewer Connections 1-11
X. Low Pressure Side Sewer Connections 1-11
Y. Joint Gravity Side Sewers. 1-11
ZZ. Gravity Side Sewer Grade 1-11
AA. Side Sewer Cleanouts 1-11
BB. Side Sewer Locations 1-12
CC. Lift Stations 1-12
DD. Lift Station Rock Catch Basin 1-12
EE. Lift Station Water Service 1-12
FF. Grinder Pump Stations 1-12
GG. Force Main Size 1-13
HH. Force Main Material 1-13
II. Force Main Depth 1-13
JJ. Force Main Cleaning 1-13
KK. Force Main Tracer Wire Locate Stations. 1-13
LL. Force Mains Entering/Exiting Structures 1-13
MM. Force Main Air Release/Vacuum Breaker Valves 1-13
NN. Grease Interceptors 1-13
OO. Oil/Water Separators. 1-13
PP. Backwater Valves 1-14

PART TWO - MATERIAL STANDARDS 2-1

SECTION 2.1 - GENERAL 2-1

A. Foundation Gravel 2-1
B. Controlled Density Fill (CDF) 2-1
C. Pea Gravel 2-1
D. Sand Bedding Material 2-2
E. Concrete Encasement 2-2
F. Native Backfill Material 2-2

G. Imported Backfill Material 2-2
H. Hot Mix Asphalt (HMA) 2-2
I. Crushed Surfacing 2-2
J. Not Used 2-2
K. 7/8-Inch Drain Rock 2-2
L. Not Used 2-3
M. Grout 2-3
N. Trench Plug 2-3
O. Unsuitable Materials 2-3
P. Ductile Iron Pipe 2-3
Q. Polywrap for Ductile Iron Pipe 2-4
R. PVC Pipe for Watermains 2-4
S. PVC Pipe for Non-Pressure (Gravity) Sewers 2-4
T. HDPE Pipe for Water Mains andPressure Sewers 2-5
U. C-905 PVC Pipe for Non-Pressure (Gravity) Sewers 2-5
V. Gate Valves 2-5
W. Valve Boxes 2-6
X. Valve Marker Posts 2-6
Y. Concrete Blocking 2-6
Z. Bolts In Piping 2-6
AA. Flange Gaskets 2-6
BB. Flexible Coupling 2-6
CC. Galvanized Steel, Pipe And Fittings For Blowoffs And Air Vacuum Relief Valves 2-6

SECTION 2.2-WATER SYSTEMS 2-6

A. Butterfly Valves 2-6
B. Fire Hydrants 2-7
C. Tapping Sleeve And Valve Assembly 2-7
D. Corporation Stop 2-7
E. Service Saddle 2-7
F. Water Service Pipe 2-7
G. Air And Vacuum Relief Valve Assemblies 2-8
H. Hydrant Guard Posts 2-8

SECTION 2.3 - SEWER SYSTEMS 2-8

A. Sewer Pipe And Appurtenances, Non-Pressure 2-8
B. Sewer Pipe And Appurtenances, Pressure 2-8
C. Side Sewer Pipe, Non-Pressure 2-8
D. Side Sewer Pipe, Pressure 2-9
E. Low Pressure Mainline Sewer Pipe And Appurtenances 2-9
F. Manholes 2-9
G. Air And Vacuum Relief Valve Assemblies 2-11
H. Cleanout Assemblies 2-11

PART THREE - CONSTRUCTION STANDARDS 3-1

SECTION 3.1 - GENERAL 3-1

A. Alignment 3-2
B. Trench Excavation 3-3
C. Timbering and Sheeting 3-3
D. Pipe Laying 3-4
E. Pipe Joints 3-5
F. Bedding Material Placement 3-5
G. Backfilling 3-6
H. Grade Lines 3-8
I. Boring and Casing 3-8
J. Pipe in Fills 3-8
K. Highway Crossings 3-8
L. Valve Installation 3-9
M. Valve Box Installation 3-9
N. Valve Marker Posts 3-9
O. Concrete Blocking 3-9
P. Air and Vacuum Release Valve Installation 3-9
Q. Access Roads 3-9
R. Painting 3-10
S. Raising Structures to Grade 3-11

SECTION 3.2 - WATER SYSTEMS 3-11

A. Fire Hydrant Installation 3-11
B. Water Service Connections 3-11
C. Meter Box Installations 3-11
D. Backflow Prevention (Cross Connection Control) 3-12
E. Connections To Existing Water Mains 3-12
F. Operation of District Valves 3-13

SECTION 3.3 - SEWER SYSTEMS 3-13

A. Manholes 3-13
B. 6-Inch Side Sewer from Main to Property Line 3-14
C. Connection to the Existing Sewer System 3-15
D. Side Sewers (Gravity or Pressure) 3-16
E. Use of Ductile Iron Pipe for Sewers 3-16
F. Lift Stations 3-16

SECTION 3.4 - TESTING FOR WATER AND SEWER PIPELINES 3-16

A. Hydrostatic Tests For Ductile Iron Water Mains 3-16
B. Hydrostatic Tests For HDPE Water Mains 3-17
C. Sterilization And Flushing Of Water Mains 3-178
D. Cleaning And Jetting Of Sewer Mains 3-18

E. Testing Of Non-Pressure Sewer Pipe 3-19
F. Hydrostatic Tests For Pressure Sewer Pipe 3-22
G. Testing For Low Pressure Mainline Sewers And Grinder Pump Systems 3-22

SECTION 3.5 – ABANDONMENT OF WATER AND SEWER FACILITIES 3-22

A. Abandonment of Water Mains 3-22
B. Abandonment of Fire Hydrants 3-23
C. Abandonment of Water Services 3-24
D. Abandonment of Manholes or Vaults 3-24
E. Abandonment of Pressure Sewer Mains 3-24
F. Abandonment of Gravity Side Sewers 3-25

PART FOUR - DISTRICT STANDARD DETAILS AND NOTES 4-1

SECTION 4.1 WATER DETAILS

1” Service Line Detail WD-1
Water Service Notes and Meter Box Requirements WD-1
3/4" and 1" Meter Setter Detail WD-2
1-1/2” and 2” Meter Setter Detail WD-3
3” and 4” Compound Meter Detail WD-4
Water Main Trench Section WD-5
3” and 4” Compound Meter Notes and Materials WD-5
1” And 2” Air and Vacuum Relief Valve Assembly WD-6
Type I and II Blow-Off Assembly WD-7
Fire Hydrant Assembly WD-8
Valve Box Pavement Patch Detail for Paved Areas WD-9
Valve Box Asphalt Collar Detail for Non Paved Areas WD-9
Hill Holder Detail WD-10
Pipe Anchor Detail WD-10
Concrete Blocking WD-11
Deadman Detail WD-12
Tie Rod Attachments WD-12
Testing Connection Detail WD-13
Valve Operating Nut Extension Detail WD-14
Valve Marker Post Detail WD-14
Water Sampling Station Detail WD-15

SECTION 4.2 SEWER DETAILS

Standard Sanitary Manhole Detail SD-1
Manhole Asphalt Collar Detail for Non-Paved Areas and Gen'l Notes .. SD-2
Manhole Pavement Patch Detail for Paved Areas and General Notes SD-2
Manhole Step and Ladder Details SD-3
Drop Manhole Detail SD-3
Pressure Line Connection Detail SD-4

Concrete Encasement for Sanitary Sewers SD-4
Sanitary Force Main Cleanout, Type II Detail.....SD-4
Single Side Sewer Detail SD-5
Double Side Sewer Detail.....SD-5
Side Sewer Details SD-5
Sanitary Manhole Inlet Connection SD-6
Side Sewer Cleanout Detail SD-6
Side Sewer As-Built Detail.....SD-6
Sanitary Sewer Trench Section.....SD-7
Force Main Tracer Wire Locate Station SD-7
Standard Grease Interceptor Detail (1000 Gallon Min.).....SD-8
Cut-In ("Saddle") Manhole Detail SD-9
Sanitary Force Main Cleanout Detail, Type II Detail.....SD-10
Vactor Truck Minimum Hammerhead Turnaround.....SD-11
Vactor Truck Minimum Circular Turnaround SD-11
Recessed Socket Detail SD-12
Davit Socket Installation Detail SD-12
Davit Spindle Detail.....SD-12

SECTION 4.4 CROSS CONNECTION DETAILS

Standard RPBA Notes and Installation Requirements.....CCD-1
Reduced Pressure Backflow Assembly (RPBA) Installation CCD-2
Double Check Valve Assembly (DCVA) Installation.....CCD-3
Standard Fire Sprinkler DCVA Connection Detail CCD-4
Double Check Detector Assembly Notes CCD-5
2-1/2” Double Check Detector Assembly.....CCD-6
4” and Larger Double Check Detector Assembly.....CCD-7

SECTION 4.5 GRINDER PUMP PLANS

Grinder Pump Installation Detail GPD-1
Grinder Pump Site Layout Instructions GPD-2
Typical Circuit Diagram GPD-2
Grinder Pump Cleanout Detail.....GPD-3
Collection Valve Box.....GPD-3
Pressure Line Connection Detail GPD-4
Pressure Line Connection to Gravity Sanitary Sewer Detail.....GPD-4
Pressure Sewer Drop Connection GPD-5
Type II Low Pressure Cleanout with Manhole (For Traffic Areas) GPD-6
Type I Low Pressure Cleanout Detail (For Non-Traffic Areas Only).....GPD-6
Section A-A Detail for Low Pressure Cleanouts GPD-7
Low Pressure Cleanout Notes and Materials List.....GPD-7

PART FIVE - DRAWING STANDARDS 5-1

SECTION 5.1 - GENERAL 5-1

A. Plan Set 5-1
B. Overall Drawing(s) 5-2

TABLE 5-1 Standard Water Symbols 5-3
TABLE 5-2 Standard Water Symbols 5-4

C. District Standards Sheets 5-5
D. Shop Drawings 5-5

SECTION 5.2 - WATER SYSTEMS 5-5

SECTION 5.3 - SEWER SYSTEMS 5-6

SECTION 5.4 - AS-BUILT DRAWINGS 5-7

A. Project Field Drawings 5-7
B. Changes in Street Names and/or Lot Lines/Numbers 5-8
C. Plats and Short Plats 5-8
D. As-Built Submittals 5-8
E. Water System As-Built Details 5-9
F. Sewer System As-Built Details 5-9

PART ONE - DESIGN STANDARDS

1.1 WATER SYSTEMS

The work shall be done in accordance with the Plans and Specifications prepared by the District's Engineer and/or Developer's Engineer and approved by the District. As a preliminary guide to applicants, the following general standards of design are set forth:

A. Watermain Extension –

1. Watermains shall be extended from the existing District water system to the Developer's Real Property. Such offsite watermains shall include watermain laterals and/or service lines, as directed by the District at its sole discretion, to all real property adjacent to the watermain so that future water service can be provided to such other real property.

2. Watermains shall be extended across the Real Property in all directions, as required by the District at its sole discretion, so as to provide for future extension of the water system beyond the Real Property.

3. Watermains shall be constructed within the Real Property so that they are adjacent to all proposed and existing lots and/or buildings within the Real Property.

B. Main Location - Mains shall be laid only in right-of-way or proposed right-of-way or within separate utility tracts in easements that have been or will be granted to the District. Easements across individual lots require District approval during preliminary design.

C. Easements - All easements shall be a minimum of fifteen (15) feet in width and shall be subject to standard District easement restrictions. Piping shall be installed no closer than five (5) feet clear from the easement's edge. Widths in excess of fifteen feet may be required by the District for locations where the District feels that construction, maintenance or repair of the water line within the easement would not be feasible.

The standard District Easement restrictions are set forth in the easement form included as a part of this Agreement. Prohibited items include locating structures over the easement, such as rockeries, walls, concrete slabs and fences.

D. Location of Line within Street Corridor - Normally the water lines shall be located on the North and/or East side of the street. Exceptions to these criteria may be granted based on excessive crossings of other utilities, separation from other utilities or other extenuating circumstances.

Criteria for location within the street cross-section:

1. Thickened edge - Locate 1-1/2 feet behind the edge of the asphalt.
2. Curb/gutter
   a) Sidewalks - locate 6 feet off of street centerline.
   b) No Sidewalks - locate 3 feet behind back of curb
   c) Combination - keep the water line location consistent throughout the project.

3. Shoulder roads - locate 1 foot behind the fog line.
4. Access tracts – extend watermain down access tract (either 4" or 8" diameter pipe), unless only 1 or 2 lots are served AND the lots are within 50 feet of the edge of right-of-way
5. Valves kept out of curb/gutter and avoid storm lines.
6. Need minimum 5 foot run to hydrants.
7. Maintenance of water line possible within the Right-of-Way.

E. Water Line Cover - Minimum depth of cover over top of water main shall be 3 feet. Maximum depth of cover over the top of water main shall be 5 feet.

F. Separation Between Other Utilities

1. Sanitary Sewer - in accordance with criteria set forth in DOE guidelines
2. Storm Sewer - Three (3) foot horizontal clearance.
3. Underground Power, Gas, Telephone and Cable - A three (3) foot horizontal clearance is preferred when utilities are aligned parallel to the water main. In any case where less than three-foot separation occurs exact measurements to the utility lines shall be provided on the As-Built drawing.

G. Line Size - Minimum line size shall be eight (8) inch diameter. In certain cul-de-sac streets or other similar circumstances the District may allow reduction to a four (4) inch diameter line size. For non-single family residential developments, the minimum line size shall be twelve (12) inch diameter unless the requirement is waived by the District.

H. Pipe Material - Pipe shall be cement-lined, Class 52 ductile iron unless otherwise indicated on the plans. Pipe shall be wrapped with a polywrap material conforming to AWWA C-600, unless otherwise indicated on the plans.

I. Dead-end Water Lines - Dead-end lines are not permitted, except in certain cul-de-sac streets, in which case hydrants or blow-offs must be provided at the end of the main.

J. Blocking on End of Mains - Concrete Deadman Blocking is required for mains that may be extended in the future.

K. Connection to Existing Mains

1. End of Main Line - A main line valve, sized the same as the main line size, may be required to be installed at the end of the existing main and new main construction connected to the new valve. Exceptions shall be considered where there is an existing valve in close proximity to the new connection.
2. Tee Connection by Wet Tap - Where the tee connection has the same size diameter as the main being tapped and the main is ductile iron, or the tee connection has a smaller diameter than the main being tapped, a wet tap of the main under pressure shall be used for connection, unless otherwise directed by the District.
3. Cut-in - Cut-in connections shall be utilized in cases where wet taps are not used or when crossing under an existing AC watermain. The cut-in connection normally consists of a

ductile iron tee, appropriate valving, two 10-foot lengths of ductile iron pipe (one on each side of the tee), and fittings necessary to connect the ductile iron pipe to the existing pipe.

L. Fitting Material - Fittings must be cement-lined ductile iron.

M. Multiple Fittings - Where more than one fitting occurs in close proximity to each other, i.e. a tee and valve, the fittings shall be flanged to each other.

N. Lines Entering/Exiting Structures - A flexible fitting shall be placed on all lines entering/exiting vaults or other structures, outside of the structure, within five feet of the structure, for protection from earthquake shaking by providing a point where the difference in vibration rates of the pipe and the structure can be absorbed. The fitting shall be a mechanical joint ductile iron sleeve. If a mechanical joint or bell connection occurs within 5 feet of the structure, outside of the structure, the flexible fitting may be omitted.

O. Pipe Anchors - Pipe anchors shall be required on all lines where the slope of the line is equal to or in excess of 20 percent. For grades up to 35 percent, anchors shall be placed at not over 36 feet on center. For grades between 35 and 50 percent, anchors shall be placed at not over 24 feet on center. For grades over 50 percent, anchors shall be placed at not over 16 feet on center.

P. Hill Holders - Hill holders shall be required where the finished grade is greater than or equal to 15 percent.

Q. Fire Hydrant Location - Standard 5-1/4 inch Main Valve Opening (MVO) fire hydrants are required approximately every 500 feet in urban areas and every 700 feet in rural areas. Standard 5-1/4 inch MVO fire hydrants are required approximately every 300 feet in commercial areas. The location of the fire hydrants shall be approved by the King County Fire Marshall's Office. Hydrants shall not be located within 3 feet of water meter boxes on center. The trunk of trees and bushes shall not be planted within 5 feet of the hydrant.

R. Fire Hydrant Line Size - Pipe runs from main line to standard hydrants less than or equal to 50 feet in length must be a minimum of 6 inches in diameter. Pipe runs from main line to standard hydrants greater than 50 feet in length must be a minimum of 8 inches in diameter. No other water connections shall be allowed on fire hydrant runs.

S. Hydrant Guard Posts - Hydrant Guard Posts shall be required wherever their installation does not violate the King County Road Standards for obstacle placement. Unless otherwise required by the District, guard posts shall be required with hydrants located on streets without vertical curb and gutter sections and in all multi-family/commercial/industrial developments. Use of guard posts for hydrants located in easements in situations other than those mentioned above shall be evaluated on an individual case basis. A minimum of two, and up to four, guardposts may be required for each hydrant.

T. Valve Type

1. Gate valves shall be used for all water mains less than 12 inches in diameter. Gate valves are allowed for wet taps that are 12 inch or larger, provided adequate cover exists.

2. Butterfly valves shall be installed on all water mains 12 inches and larger. Butterfly valves may require plugging for testing purposes.

3. All valves installed for future extensions shall be plugged by blind flange or mechanical plug.

U. Valve Locations

1. Not more than 800 feet between valves in residential areas, not more than 500 feet in commercial areas.

2. At intersections:

3. Full valve clusters at all major water line intersections.

4. Valve on dead end line where dead end line intersects the main water line.

5. Provide ability to serve water line from alternate directions in a looped system, while isolating a section of main for maintenance, repair or continuation.

6. Locate at positions that will be readily located in the future. i.e., at intersections or in conjunction with a fire hydrant.

7. Local circumstances, such as construction requirements.

V. Blow-offs – Blow-offs shall be located at the end of all dead end mains. The District has two standard types of blow-offs, as shown on the Standard District Details. See Part Four of these Technical Specifications. Type I blow-offs are normally used where the main may be extended in the future. Type II blow-offs are required where the main will not likely be extended in the future. Type II blow-offs may be substituted for Type I blow-offs. If a hydrant is located at the end of a dead end main, the District may consider waiving the blow-off requirement.

W. Air and Vacuum Release Valves - Two-inch air and vacuum release valves shall be installed at high points in the system. One-inch air and vacuum release valves may be allowed upon District approval, where calculations indicate the anticipated air volume is within manufacturers specifications for one-inch valves. The depth of the watermain near the air/vacuum release valve shall be deep enough to achieve at least the minimum upslope (2%) to the air/vacuum release valve. The depth of the watermain shall be shown on the drawings.

X. Meters

1. Single-Family Residential

a) <u>Location</u>

All lots shall have meters located along their frontage. Wherever possible, meters shall be located within 5 feet of the property line.

If a lot does not have frontage on a water main, the meter shall be located on the lot's legal access route. Meters must be located within 50 feet of the property line on the access route. If the distance is greater than 50 feet, a watermain must be extended along the access route to the property to be served. The District shall approve all other

locations. The private water service line between the meter and the property must be located under the pavement to protect the private water service line from damage from other utilities, landscaping, fencing, and other construction activities.

All meter locations shall be within the right-of-way or easements granted to the District. The location shall be easily accessible by District personnel at all times.

The trunks of trees and structures shall not be located within 5 feet of meter boxes. Meter boxes shall be positioned with at least 18 inches clearance from any other utilities, bushes or obstructions. Meters shall be located, where practical, on lot corners. A single meter setter for each lot shall be used.

Locating meter boxes in driveways or paved areas shall not be permitted, except with written District approval. Where unavoidable traffic bearing meter boxes shall be used, a 3/4 inch expansion joint shall be provided around the box with a eighteen (18) inch gap between the expansion joint and meter box on all sides. Sanitary side sewers shall be a minimum of 10 feet away from the meter location.

b) Size - Meter size shall be based on the lot or house size, total plumbing fixture count, system pressure, the use of in-ground irrigation and/or the need for fire sprinkler systems. The standard meter sizes are 3/4" and 1". If there are lots that have specific meter size requirements based on the need for fire sprinkler systems, or other reasons, they shall be called out on the design. Single family houses with separate ADUs (accessory dwelling unit) may be served by a single meter. The plumbing fixture count shall be the combined total for both structures.

c) The following are the District criteria for meter and service line sizes:

Type of Service	Service Line Size	Setter Size	Meter Size
Standard	1”	Single ¾”	¾”
No. of Plumbing Fixtures Requiring Greater than ¾” Meter*	1”	Single 1”	1”
Fire Sprinklers	1”	Single 1”	1” Note: If pressures are less than 55 psi, inform developer and find out if larger lines/meters will be required

*Requires that the property owner apply for a larger meter and pay all necessary fees.

2. Multi-Family/Commercial/Industrial

a) Service to Each Building – For non-single family residential developments, each building shall be served by at least one individual meter. Where a building has service from multiple meters, the plumbing system served by each meter shall be separate, so that service is provided only from one meter.

b) Location - The District shall approve all meter locations. All meter locations shall be within the right-of-way or easements granted to the District. The location shall be easily accessible by District personnel at all times. Locating meter boxes in driving areas shall not be allowed. Traffic bearing meter boxes shall be used if the location is in an area where vehicles may enter within 2 feet of driving surface. Sanitary sewers or side sewers shall be a minimum of 10 feet away from the meter location. A single meter setter for each lot shall be used.

c) Size - Meter size shall be based on the needs and requirements of the development. Specific meter sizes shall be called out on the design. With 3" and 4" meters the meter should be specified as a Compound or other type meter.

3. Irrigation

a) Location - The District shall approve all meter location. All meter locations shall be within the right-of-way or easements granted to the District. The location shall be easily accessible by District personnel at all times. Irrigation meters shall not be placed on double setters, where the other meter may be for domestic use. Locating meter boxes in driving areas shall not be allowed. Traffic bearing meter boxes shall be used if the location is in an area where vehicles may enter within 2 feet of driving surface. Sanitary sewers or side sewers shall be a minimum of 10 feet away from the meter location.

b) Size - Meter size shall be based on the needs and requirements of the development. Specific meter sizes shall be called out on the design. With 3" and 4" meters the meter should be specified as a Turbine or other type meter. Non single-family residential customers shall have an irrigation meter that is separate from the domestic supply water meter.

c) Cross-Connection Control - Irrigation water meters shall have a cross-connection control device, approved in the State of Washington, installed on the customer side of the meter, near the meter box. The cross-connection control device shall be tested at the time of installation by a State-certified backflow prevention tester.

Y. Service Lines

1. Location - Service lines shall run as close to perpendicular across the street and/or right-of-way as possible, from the main to the meter box. The maximum length service line shall be 60 feet. Where "bubbles" are located off to the side of a street, the length may be increased if there are two or less service lines that are greater than sixty feet in length. If the right-of-way width is greater than sixty feet, the service line length may be increased accordingly.

2. Size - Service line size shall be based on the number of meters that will be served by the line, the size of the meter(s) to be served, system pressure and/or the size of the lots being served. Within a development, if there are more than one service line size based on the District criteria, the larger line size shall be used for all domestic services. District criteria for single family residential development services are given in the Meters section above. Irrigation, multi-family, commercial or industrial service line sizes shall be based on the request and needs of the developer.

3. Obstructions - Structures that shall not be constructed over the service lines include, but are not limited to: fences, carports, buildings, landscape timbers, retaining walls, mailbox stands, trees, and rockeries.

Z. Backflow Prevention

1. For non single-family structures, double check detector assemblies (DCDA) shall be provided on fire sprinkler lines. DCDA's shall be located in vaults as shown in Part Four.

2. Additional backflow prevention devices may be required depending on type of facility. For facilities designated by the State of Washington as high hazard facilities (such as car washes, service stations, multi-use commercial building pads, mixed-use multi-family, etc.), premise isolation of all water service lines shall be provided using reduced pressure backflow assemblies (RPBA). Such high hazard facilities shall be required to have a DCDA for the fire sprinkler system, unless such fire sprinkler system has chemicals added.

3. For single-family structures, backflow prevention devices shall be provided for in-ground irrigation systems at the point where the irrigation lines are connected to the domestic supply line to the house, and for fire sprinkler systems. Backflow devices for fire sprinkler systems shall be double check valve assemblies (DCVA) installed directly behind the water meter.

4. For multi-family residential structures greater than 30 feet in height shall have a DCVA installed directly behind the water meter. Mulit-family in a mixed use development shall require a RPBA.

5. For additional information, see the District's Cross Connection Control Program requirements.

AA. Fire Sprinkler Lines

1. Fire sprinkler lines shall be a minimum of 4 inch diameter ductile iron between the main and the DCDA vault. The line shall be fully restrained with megalug fittings, field lock push on joints, and thrust blocks.

2. For non single-family customers, fire sprinkler service shall be provided through a separate tap to the water main, and a DCDA shall be required. Some single-family customers may also require a separate tap.

3. Additional backflow prevention devices may be required depending on type of facility or system.

BB. District Sampling Stations - District sampling stations, installed where directed by the District, shall consist of a 1-inch water service line and meter stop. District will install sampling station.

1.2 SANITARY SEWER SYSTEMS

The work shall be done in accordance with the Plans and Specifications prepared by the District's Engineer and/or Developer's Engineer and approved by the District. As a preliminary guide to applicants, the following general standards of design are set forth:

A. Sewer Extension

1. Sewers shall be extended from the existing District sewer system to the Developer's Real Property. Such offsite sewers shall include sewer mains and/or side sewer stubs, as directed by the District at its sole discretion, to all real property adjacent to the sewer so that future sewer service can be provided to such other real property.

2. Sewers shall be extended across the Real Property in all directions so as to provide for future extension of the sewer system beyond the Real Property.

3. Sewers shall be constructed within the Real Property so that they are adjacent to all proposed or existing lots and/or buildings within the Real Property.

B. Design Criteria - All design shall be in accordance with Department of Ecology "Criteria for Sewer Works Design", latest revision.

C. Sewer Flow - All sanitary sewer design shall be by gravity flow, except by special arrangement with the District.

D. Storm/Surface/Ground Water Restrictions - No storm water, surface water or ground water shall be discharged into sanitary sewers.

E. Main Location - Mains shall be laid only in right-of-way or proposed right-of-way or within separate utility tracts in easements that have been or will be granted to the District. They shall be located in public right-of-way in preference to easements. Easements across individual lots require District approval during preliminary design.

F. Easements - All easements shall be a minimum of fifteen (15) feet in width and shall be subject to standard District easement restrictions. Piping shall be installed no closer than five (5) feet clear from the easement's edge. Widths in excess of fifteen feet may be required by the District for locations where the District feels that construction, maintenance or repair of the sewer line within the easement would not be feasible.

The standard District Easement restrictions are set forth in the easement form included as a part of this Agreement. Prohibited items include locating structures over the easement, such as rockeries, walls, concrete slabs, fences, and trees.

G. Location of Line within Street Corridor - Normally the sewer lines shall be located on the South and/or West side of the street. Exceptions to these criteria may be granted based on excessive crossings of other utilities, separation from other utilities or other extenuating circumstances.

Criteria for Location within the Street Cross-Section

1. Thickened edge - Locate 6 feet off of street centerline.

2. Curb/gutter - locate 6 feet off of street centerline.
3. Shoulder roads - locate 2 feet behind the fog line.
4. Manholes kept out of curb/gutter and drainage courses.
5. Maintenance considerations - accessible and maintenance of sewer line possible within the Right-of-Way.
6. Amount of restoration that will be required following construction.

H. Sewer Line Depth

1. All gravity sewer mains shall be a sufficient depth to drain basements and be protected against damage by frost and traffic. There shall be a minimum of five (5) feet of cover over the crown of the sewer line. At natural drainage crossings, this may be reduced to three (3) feet.

2. A minimum of four (4) feet of cover shall be provided over low pressure mainlines.

I. Separation Between Other Utilities

1. Water - in accordance with criteria set forth in DOE guidelines
2. Storm Sewer - Three (3) foot horizontal clearance.
3. Underground Power, Gas, Telephone and Cable - A three (3) foot horizontal clearance is preferred when utilities are aligned parallel to the water main. In any case where less than three foot separation occurs exact measurements to the utility lines shall be provided on the As-Built drawing.

J. Line Size

1. Minimum gravity line size shall be eight (8) inch diameter.
2. Minimum low pressure mainline size shall be two (2) inch diameter.
3. The extension shall incorporate adequate capacity to provide the future expansion of the system in conformity with the District's comprehensive planning and future needs.

K. Pipe Material

1. Gravity pipe shall be PVC or ductile iron unless otherwise indicated on the plans. Ductile iron pipe shall be wrapped with a polywrap material conforming to AWWA C-600 and shall be lined with Protecto 401, unless otherwise indicated on the plans. C-905 pipe may be considered for lines fourteen (14) inches and greater in diameter. <u>Pipes with slopes greater than or equal to twenty (20) percent shall be ductile iron or C-900 or C-905.</u> Pipes buried twenty (20) feet deep or deeper shall be ductile iron, C-900 or C-905. Ductile iron pipe shall be lined with Protecto 401 ceramic epoxy lining.

2. Low pressure pipe shall be HDPE SDR 11 with tracer wire.

L. Gravity Pipe Grade

1. Lines shall be on straight alignment and uniform grade between manholes.

2. No grade shall be permitted resulting in a velocity of less than two feet per second at design flow.

3. If slope and volume are such that velocities above twelve feet per second are realized at average flow, special provisions shall be made for anchoring the pipe and protect against erosion of the sewer system. In any case where the slope of the pipe is greater than twenty (20) percent, pipe anchors shall be required.

4. The crowns of pipes of different diameters entering a manhole shall be installed at the same elevation.

5. If the slope of the sewer pipe upstream or downstream of a manhole exceeds five (5%) percent, the greatest slope shall be conveyed through the manhole. Manhole invert elevations shall be calculated reflecting this condition and shall be shown on the drawings.

M. Hill Holders - Where the finished grade of the ground is in excess of fifteen (15) percent, hill holders shall be required.

N. End of Sewer Mains - All sewer mains shall end in a manhole. Cleanouts may be considered on an individual case basis with written District approval.

O. Manhole Location - A manhole shall be provided at each grade, alignment or size change. No distances in excess of 300 feet shall be permitted between manholes unless authorized in writing by the District.

P. Manhole Size - All manholes less than 20 feet deep shall be forty-eight (48) inch minimum diameter, and eight (8) foot minimum depth from invert to rim elevation. The District may, at its sole discretion, allow manholes between six (6) feet and eight (8) feet in depth from invert to rim elevation. Manholes 8 feet deep and shallower shall have two (2) foot cones. If the depth of the sewer is 20 feet or greater, sixty (60) inch minimum diameter manholes shall be used. If the diameter of the sewer is 15 inches or greater, seventy-two (72) inch minimum diameter manholes shall be used.

Q. Direction Change through Manholes - The change in direction between flow entering and exiting a manhole shall not be less than ninety (90) degrees. (Any change in direction requiring an acute angle in the manhole channel is not permitted.)

R. Manhole Channels - Manholes shall be full-channel with a minimum of one-tenth (0.1) foot drop in elevation through the manhole. Where the slope of a sewer line is greater than five (5%) percent as discussed above, the greater slope shall be continued through the manhole. The channel for sewer lines entering manholes perpendicular to the through direction of flow shall be curved in a sweeping radius to direct the flow downstream. No pre-channeled manholes shall be allowed.

S. Transition Manholes – In cases where a sewer main with a slope in excess of four (4) percent must turn through a manhole at an angle between 45° and 90°, a transition manhole shall be provided upstream to reduce the slope to a maximum of 2 percent and/or to reduce the angle of the turn to between 0° and 45°. Outside drop connections may be used ONLY where the angle of the downstream direction of flow is between 0° and 45°.

T. Manhole Lining – The manhole into which a force main or low pressure mainline discharges shall be lined with 5-9 mils of Tnemec Series 141 Epoxoline or Wasser Aeroshield. In addition, the two manholes downstream of that manhole shall be lined with Tnemec Series 141 Epoxoline or Wasser Aeroshield, if installed as part of the same project. If existing, the two downstream manholes shall be lined with a protective coating resistant to hydrogen sulfide corrosion, such as Wasser Aeroshield, or Tnemec Series 141 Epoxoline. Submit product information for District review. Coating thickness shall be per the manufacturer's recommendations.

U. Manhole Cone - Manholes eight (8) feet and less in depth shall have cones a maximum of two (2) feet in height.

V. Manhole Access Roads – Wherever possible, access to manholes shall be provided on public or private roads to which the District has access. Where such access is not possible, access roads shall be required to **ALL** manholes not located within or immediately adjacent to public or private roads. Turnarounds conforming to the District's standard detail shall be provided at the end of dead end manhole access roads.

W. Gravity Side Sewer Connections - Connections to a new sewer main shall be made with tee fittings. Connections to an existing sewer main of a single-side sewer not associated with a new development may be made, with written District approval, by cut-in tee fitting or side sewer saddle connection conforming to the requirements in Part 2.

X. Low Pressure Side Sewer Connections – Connections shall be made with SDR 11 or Schedule 80 threaded fittings and shall terminate in Collector Valve Boxes as shown in the Standard Details.

Y. Joint Gravity Side Sewers - Double side sewers shall be split with wye fittings. If a side sewer serves three or four housing units, a minimum of six (6) inch diameter pipe shall be used to the last (upper) wye. A cleanout will be required at the wye where the upper connection is made. Side sewers serving more than two residential structures shall be subject to approval by the District. Up to three housing units in one building (triplex) may be served by one side sewer. Joint side sewers for commercial structures are not permitted. Each commercial structure shall be equipped with its own side sewer.

Z. Gravity Side Sewer Grade - Side sewers from the sewer main to the building shall have a minimum slope of two (2) percent. At the District's sole discretion, slopes may be reduced to one (1) percent; in that case, the side sewer diameter shall be increased to six (6) inches.

AA. Side Sewer Cleanouts – Cleanouts shall be installed at intervals not to exceed one hundred (100) feet in straight runs and for each aggregate horizontal change in direction exceeding one hundred thirty-five (135) degrees per the Uniform Plumbing Code. The maximum length of side sewer shall be 200 feet unless the requirement is waived by the District. Side sewer

cleanouts shall be located no more than three feet from the building foundation. For single-family residential developments, cleanouts located in unimproved or landscaped areas shall be no more than 12 inches below ground surface. Cleanouts located in sidewalks, pavement, or other improved areas and cleanouts for non-single family developments shall be brought to grade as shown in the Standard Detail.For multiple single-family residential connections, a six (6) inch diameter wye and cleanout shall be installed where the last (upper) connection is made. The District may require a forty-eight (48) inch manhole at the upper terminus of such lines on both residential and commercial tracts in lieu of cleanouts.

BB. Side Sewer Locations

1. In single family residential developments the side sewers shall be extended at least ten (10) feet into the individual lots, and shall be at least five (5) feet from a side property line.
2. Side sewers shall be installed perpendicular to the main.
3. All lots shall have side sewers located along their frontage and shall not be located in private side sewer easements without the express prior written consent of the District.
4. On extensions through areas not currently being developed, side sewers shall be extended as close as practical to the property line.
5. In non-single family residential developments the locations of the side sewer extensions shall be decided on a case by case basis.
6. A minimum of ten (10) foot separation shall be maintained between the side sewer and water mains or water service lines.
7. Structures that shall not be constructed over the side sewer lines include, but are not limited to, fences, carports, buildings, landscape timbers, retaining walls, mailbox stands, trees, and rockeries.
8. A maximum of two (2) side sewers shall be connected to a manhole.

CC. Lift Stations - In any case where a lift station is being considered, the District shall be consulted for its latest criteria on lift stations standards for controls, telemetry, generators and other associated components. Permanent lift stations shall have permanent standby generators.

DD. Lift Station Rock Catch Basin - The last manhole in the lift station site before entering the wet well shall have a two (2) foot deep catch below the lowest pipe invert. This manhole shall be located so that it is accessible for regular cleaning of the manhole by a vactor truck.

EE. Lift Station Water Service - A water service with a 3/4-inch hose bib shall be provided at all lift stations, with a Reduced Pressure Backflow Assembly (RPBA) backflow prevention device, located at the property line. In wet well/dry well installations the service shall be located within the dry well.

FF. Grinder Pump Stations - Grinder pumps may be installed for individual structures as designated by the District. Standard lift stations will normally be required where gravity flow cannot be achieved. See Standard Details.

GG. Force Main Size - The force main shall be sized to maintain a minimum velocity of three (3) feet per second (fps) with design flows and a maximum velocity of 8 fps. A minimum diameter of four (4) inches shall be used with sewage pumps that can pass a three (3) inch solid.

HH. Force Main Material – Permanent force mains shall be ductile iron for diameters of four (4) inches or greater, and high-molecular weight polyethylene pipe (HDPE) for diameters less than four (4) inches. Permanent ductile iron force mains under gas easements shall be AWWA C900, Class 150 pipe. Temporary force mains may be AWWA C900, Class 150 for diameters of four (4) inches or greater, and high-molecular weight polyethylene pipe for diameters less than four (4) inches. The determination of whether a force main is temporary or permanent shall be made solely by the District.

II. Force Main Depth - A minimum cover of six (6) feet is required. This cover may be reduced to four (4) feet when ductile iron pipe is used. The cover may be reduced to three feet when crossing a drainage course. The cover for grinder pump collector force mains shall be a minimum of three (3) feet.

JJ. Force Main Cleaning – For force mains 8 inches in diameter and larger, the lift station will be equipped with a pig launch facility unless otherwise directed by the District. The manhole into which the force main discharges shall be equipped with an aluminum pig catch grating. Cleanouts will be provided on force mains 6 inches in diameter and smaller, with the cleanouts spaced at 500-foot intervals.

KK. Force Main Tracer Wire Locate Stations – Test stations containing tracer wire shall be located over the centerline of all force mains at 500-foot intervals and at bends.

LL. Force Mains Entering/Exiting Structures - A flexible fitting shall be placed on all lines entering/exiting vaults or other structures, outside of the structure, within five feet of the structure, for protection from earthquake shaking by providing a point where the difference in vibration rates of the pipe and the structure can be absorbed.

MM. Force Main Air Release/Vacuum Breaker Valves - Air release/vacuum breaker valves shall be required at high points in the force main and as designated by the District.

NN. Grease Interceptors – All commercial or industrial facilities, schools, churches, or other non-single family residential facilities that have food service facilities or car washes shall be equipped with an approved type and adequately sized grease interceptors or oil/water separators. Submit sizing calculations for District review. Piping shall be a minimum of 6 inches in diameter and the discharge pipe shall be connected directly to a manhole. Connection to the blackwater building sewer requires written District approval. All commercial building pads with unidentified or potentially variable uses must be provided with a grease interceptor at the time of initial construction. Provide graywater plumbing to building pad(s). If discharge into manhole is not feasible, in the sole opinion of the District, provide a sampling point prior to discharge to sewer. Submit plan and product submittal for District review. For additional information, see the District's Fats, Oils, and Grease regulations.

OO. Oil/Water Separators – Oil/water separators shall be provided for parking garages, car washes, service stations, and other covered facilities where gasoline and oil may contaminate storm water handling facilities. Submit sizing calculations for District review. The oil/water

separator shall be located on the side sewer just upstream from the District's sewer system, and shall be privately maintained and owned. Open air parking lots, although they may be equipped with oil/water separators, shall not be routed to the sewer system since they will introduce stormwater inflow to the sewer system. If discharge into manhole is not feasible, in the sole opinion of the District, provide a sampling point prior to discharge to sewer. Submit plan and product submittal for District review. For additional information, see the District's Fats, Oils, and Grease regulations.

PP. Backwater Valves – "The Uniform Plumbing Code requires backwater valves on building sewers where the finished floor is below the rim of the upstream manhole. Backwater valves, if they are installed, must be located within the building footprint upstream of the cleanout. The District is not responsible for their installation, maintenance, or operation. The side sewer permit for a building with a backwater valve shall include a hold harmless clause which indemnifies the District against any liability, damage, or cost which may accrue from the installation and operation of a backwater valve in the side sewer." A note with the exact wording shown in quotes above shall be placed on the drawings with an asterisk, and each building or lot whose finished floor elevation indicates the need for a backwater valve shall have an asterisk next to the building number or lot number as reference to the note.

PART TWO - MATERIAL STANDARDS

2.1 GENERAL

All materials and equipment shall be new and undamaged. Where possible, the same manufacturer of each item shall be used throughout the job. In accordance with paragraph WS-20 "Material and Equipment List" of this Agreement, the Developer or Contractor shall file a material and equipment list with the District including the quantity, manufacturer, model number and technical specifications, if applicable, of material and equipment to be installed as part of the work. If requested by the District, five (5) copies of all information concerning the specifications, installation, operation and maintenance of material and equipment installed as part of the work shall be furnished to the District in five separate labeled binders.

A. Foundation Gravel

Foundation gravel used for backfill of over-excavated trenches shall conform to the requirements of WSDOT/APWA 9-03.17, “Foundation Material, Class B.”

B. Controlled Density Fill (CDF)

Controlled Density Fill (CDF) shall be a mixture of Portland cement (Type I or II), fly ash (ASTM C618, Class F), fine aggregates (coarse sand with 100% passing 3/8-inch sieve, 60-100% passing No. 4 sieve, and 0-5% passing No. 200 sieve), and water, with a maximum 28-day compressive strength of 100 psi, conforming to following proportions:

Material	Batch Weight/Cubic Yard
Mixing Water	50 lb/cu yd
Portland Cement	30 lb/cu yd
Fly Ash	200 lb/cu yd
Fine Aggregate	3200 lb/cu yd

Submit CDF mix design for District review prior to use.

C. Pea Gravel

Bedding material for PVC or HDPE pipe shall be well graded, clean granular gravel material commonly known as pea gravel. Material slightly smaller than pea gravel may be used.

Bedding material shall meet the following requirements:

U.S. STANDARD SIEVE SIZE	PERCENT PASSING
3/8" Square Opening	100%
No. 8 Sieve	0 - 5%

D. Sand Bedding Material

Bedding material for ductile iron pipe shall conform to the requirements of WSDOT/APWA 9-03.13, Backfill for Sand Drain".

E. Concrete Encasement

Concrete material for encasing water mains crossing over sewer pipes shall have a 30-day compressive strength of not less than 1,500 psi. The mix shall have a slump of between one (1) and five (5) inches.

F. Native Backfill Material

Native materials will be considered suitable for use in backfilling if the material is not sensitive to moisture (compactable if moisture content is greater than optimum). Native materials shall be a sand and gravel combination with no deleterious materials. All materials shall pass a 3-inch sieve.

G. Imported Backfill Material

Durable crushed gravel or rock; or naturally occurring sands and gravels free from wood, bark, roots or other extraneous material, meeting the requirements of WSDOT/AWPA 9-03.19 for "Bank Run Gravel for Trench Backfill", with percent passing the No. 200 sieve limited to 5 percent max.

H. Hot Mix Asphalt (HMA)

Hot Mix Asphalt (HMA) shall be CL ½" as specified in WSDOT/APWA Section 9-03.9(6) Aggregates for Hot Mix Asphalt, HMA Proportions of Materials, and Performance Graded PG 58-22. Aggregate for asphalt concrete shall conform to the requirements of WSDOT/APWA Sections 9-03.8(1) through 9-03.8(6) for Aggregates for Hot Mix Asphalt, inclusive.

I. Crushed Surfacing

1. Top Course and Keystone Material (5/8" Minus): For use in the restoration of excavated areas. Top Course and Keystone material shall conform to the requirements of WSDOT/APWA 9-03.9(3), "Crushed Surfacing" for Top Course and Keystone.

2. Base Course Material (1 ¼" Minus): Base Course Material shall conform to the requirements of WSDOT/APWA 9-03.9(3), "Crushed Surfacing" for Base Course.

J. Not Used

K. 7/8-inch Drain Rock

Material for drains around facilities such as hydrants, blowoffs, and hill holders shall conform to the requirements of WSDOT/APWA 9-03.12(5), "Gravel Backfill for Drywells", except that the material shall be washed to remove fines.

L. Not Used

M. Grout

Grout shall consist of one part Portland Cement, three parts fine sand, and sufficient water to allow proper workability. “Jet-Set” is not allowed.

N. Trench Plug

Low permeable fill material, a non-dispersible clay material having a minimum plasticity index of 10.

O. Unsuitable Materials

1. Unsuitable materials include the materials listed below:

   (a) Soils which, when classified under ASTM D 2487 - Standard Classification of Soils for Engineering Purposes (Unified Soil Classification System), fall in the classifications of Pt (Peat), OH (organic clays of medium to high plasticity, organic silts), CH (inorganic clays of high plasticity, fat clays), MH (inorganic silts, micaceous or diatomaceous fine sandy or silty soils, elastic silts), or OL (organic silts and organic silty clays of low plasticity). OH, CH, MH with liquid limits of greater than 50 and OL liquid limit less than 50.

   (b) Soils which cannot be compacted sufficiently to achieve the density specified for the intended use or as determined by the District. Soil additives for drying or stabilization will not be allowed, including but not limited to fly ash, Portland cement, or kiln dust.

   (c) Materials that contain organic material, hazardous or designated waste materials including petroleum hydrocarbons, pesticides, heavy metals, and any material which may be classified as hazardous or toxic according to applicable regulations.

   (d) Soils that contain greater concentrations of chloride or sulfate ions, or have a soil resistively or pH less than the existing on-site soils.

P. Ductile Iron Pipe

Ductile Iron pipe shall be cement mortar-lined and zinc coating as specified herein unless otherwise indicated on the plans. Any pipe found to have dimensional tolerances in excess of those prescribed by the manufacturer or having defects which prevent adequate joint seal or any other damage shall be rejected. If requested by the District, not less than three nor more than five pipe lengths of pipe for each size, selected from stock by the District, shall be tested as specified for maximum dimensional tolerance of the respective pipe.

Ductile Iron pipe shall conform to AWWA Standard C151, Thickness Class 52 or as indicated on the Drawings. Pipe with cement mortar lining shall conform to AWWA C104. The exterior of Ductile Iron pipe shall be coated with a layer of arc-sprayed zinc per ISO 8179. The mass of the zinc applied shall be 200b/m². A finishing layer topcoat shall be applie to the zinc. The mean dry film thickness of the finishing layer shall not be less than 3 mils with a local minimum not less than 2 mils. The coating system shall conform in every respect to ISO 8179-1 "Ductile iron pipes- External zinc-based coating – Part 1: Metallic zinc with finishing layer" Second edition 2004-06-01 Ductile Iron pipe and fittings for sewer shall be lined with PROTECTO 401 ceramic epoxy coating (Manufacturer – Induron, Birmingham, Alabama (888) 773-2401). Joints shall be mechanical joint or push-on joint and shall conform to AWWA C111.

1. Ductile Iron and Cast Iron fittings shall conform to AWWA Standard C110. Mechanical or push-on joints shall conform to AWWA Standard C111. Flanged joints shall conform to ASA Standard B-16.1, Class 125 with ductile iron followers. All fittings shall be cement mortar lined in conformance with AWWA Standard C104.
2. Where required on the Drawings, restrained push-on joint pipe and fittings shall be provided. Restrained joint pipe shall conform to AWWA Standard C151, Thickness Class 52 or as indicated on the Drawings. Pipe shall have cement mortar lining conforming to AWWA C104. Push-on restrained joints shall conform to AWWA C111. Restrained joints shall be designed for a water working pressure of 350 psi for sizes 4-inch through 24-inch, 250 psi for sizes 30-inch through 48-inch, and 150 psi for sizes 54-inch through 64-inch. Submit type of restrained joint pipe to the District for approval.
3. Where fittings are called for on restrained joint pipes, mechanical joints with megalugs or Alpha fittings shall be used.
4. Ductile Iron pipe shall be polywrapped.
5. Ductile Iron pipe shall be furnished with factory-installed plugs in each end of each stick of pipe. Such plugs shall remain installed until the pipe is ready to be installed in the trench.

Q. Polywrap for Ductile Iron Pipe

Polywrap shall conform to ANSI/AWWA A21.5/C105 (See AWWA C600) for linear low-density polyethylene film. The inside surface of the polyethylene wrap to be in contact with the pipe exterior shall be infused with a blend of anti-microbial biocide to mitigate microbiogically influenced corrosion and volatile corrosion inhibitor to control galvanic corrosion.

R. PVC Pipe for Watermains

PVC pipe 4 inches or larger in diameter shall conform to AWWA C900, Class 150. PVC pipe for water service shall only be used where crossing the gas pipeline easement. The pipe shall conform to WSDOT/APWA 9-30.1(5).

S. PVC Pipe for Non-Pressure (Gravity) Sewers

PVC pipe for depths up to twenty (20) feet, and less than 14 inches in diameter shall conform to ASTM D3034 and shall be defined as flexible conduit. Joints shall conform to ASTM D3212 using a restrained rubber gasket conforming to ASTM F477. Fittings shall be injection molded tees . Saddles fastened to pipe with external bands are not acceptable on any new system.

PVC pipe used for depths twenty (20) feet and greater and less than 14 inches in diameter shall conform to AWWA specification C900, Class 150 (DR 18). Joints shall conform to ASTM D3139 with rubber gaskets meeting ASTM F477. Fittings shall be Class 150 injection molded tees, meeting the requirements of AWWA C-907 and ASTM D1784.

T. HDPE Pipe for Water Mains and Pressure Sewers

HDPE pipe for water mains and pressure sewers may be used in specific situations where Ductile Iron pipe is not appropriate or feasible. The use of HDPE requires written District approval. The specifications and class of the HDPE will be determined on a project-specific basis including such factors as working pressure.

U. C-905 PVC Pipe for Non-Pressure (Gravity) Sewers

C-905 PVC pipe may be considered for lines that are fourteen (14) inches and greater in diameter. Pipe shall conform to the requirements of AWWA C905 and Uni-B-11.

All pipe joints shall be rubber gasketed. Rubber gaskets shall conform to ASTM F477.

V. Gate Valves

1. Gate valves shall conform to AWWA C-515, be epoxy coated, resilient seated, have a non-rising stem, a minimum of 200 PSI working pressure unless otherwise specified, shall have a standard 2-inch operating nut, and the standard opening rotation shall be counter-clockwise.

2. Gate valves shall be used for all water mains less than 12 inches in diameter. Gate valves are allowed for wet taps.

3. Butterfly valves shall be installed on all water mains 12 inches and larger. Butterfly valves may require plugging for testing purposes.

4. Where called for on the plans, gate valves shall be used for sewers four (4) inches and larger.

5. Special valves and fittings shall be as specified on the plans.

6. Gate Valves shall be one of the following types, with stainless steel bolts:
   a) Mueller
   b) Kennedy M & H
   c) Clow
   d) US Pipe
   e) American Flow Control Series 25002-17
   f) AVK

W. Valve Boxes

Valve boxes shall be Cast Iron, 2 piece, suitable for installation required, equal to Olympic Foundry Company/APWA Valve Box VB045. Valve box lids shall fit snugly in the casting. Valve Box Lid shall be marked “WATER” for water facilities. Valve boxes shall be equal to Olympic Foundry 940 and marked “SEWER” for sewer facilities.

X. Valve Marker Posts

Valve marker posts shall be reinforced concrete posts, 4"x4" on one end and 4"x6" on the other end, and 42" long. Posts shall be equipped with 1.5” raised Cole brand numbers referencing distance to the valve to the nearest foot. Cole brand numbers shall be installed using waterproof Liquid Nails brand glue suitable for metal surfaces.

Y. Concrete Blocking

Concrete blocking shall be a 1:3:6 mix with a six-inch (6") maximum slump.

Z. Bolts In Piping

All bolts shall be new and shall be of the same type and quality of the pipe or fittings as supplied by the manufacturer. Bolts shall be in conformance with AWWA Standard C110.

AA. Flange Gaskets

Flange gaskets shall be Ring-type cloth insert rubber gaskets 1/16-inch thick equal to Rainbow or Durable Garlock. Gaskets shall cover the full face of flanged fitting ends.

BB. Flexible Coupling

Flexible couplings shall be cement-lined, Mechanical Joint, Ductile Iron long-pattern sleeves unless otherwise approved by the District.

CC. Galvanized Steel, Pipe And Fittings For Blowoffs And Air Vacuum Relief Valves

Galvanized steel pipe shall conform to ASTM A120-65, Schedule 40. Galvanized steel fittings shall be malleable galvanized.

2.2 WATER SYSTEMS

All water mains shall be cement-lined Ductile Iron as specified herein unless otherwise indicated on the Plans.

A. Butterfly Valves

Butterfly valves shall conform to AWWA C-504. Unless otherwise specified the valves shall be class 150, ductile iron, epoxy coated, stainless steel bolts, shaft seals shall be "O" ring type, the standard opening rotation shall be counter-clockwise and shall have a standard 2" operating nut.

1. Butterfly Valves shall be one of the following types:

a) Mueller/ Pratt

b) Kennedy M & H

B. Fire Hydrants

1. Fire hydrants shall be a dry-barrel, compression-type traffic model with a 5-1/4 inch main valve opening (MVO) with brass on brass or brass on stainless steel seating as specified for 36-inch trench, unless otherwise designated, flanged at ground line, 6 inch MJ connection with lugs suitable for rods; two 2-1/2 inch hose connections, National Standard Thread; pumper connection shall be a 4-inch Seattle Standard Thread 4.875 x 6 equipped with a five (5) inch, 125-5 Storz quick connect fitting, unless otherwise noted on the drawings or as required by the local fire department jurisdiction. Operating nut shall be 1-1/4 inch pentagon and shall open counter-clockwise. Hydrant shall be so constructed that the direction facing of pumper connection may be rotated to face the roadway. Hydrants shall comply with AWWA C502. Unless otherwise specified, hydrant shall be of dry barrel traffic type with break flange construction.

2. Hydrants shall be one of the following types:

a) Dresser M&H 129

b) Mueller A423 (Super Centurion 250)

c) Clow Medallion

d) American Darling B-62-B

e) AVK Series 2780

f) U.S. Pipe Sentinel 250

C. Tapping Sleeve And Valve Assembly

Where required by the District, tapping sleeves shall be Romac FTS 420 or JCM 412 , with fusion-bonded epoxy coating and Type 304 stainless steel fasteners. The gate valve shall conform to the requirements herein.

D. Corporation Stop

See Standard Details - Service Connections.

E. Service Saddle

See Standard Details - Service Connections.

F. Water Service Pipe

Water service pipe shall be DRISCOPLEX 5100 ULTRA-LINE or equal manufactured from a high density, extra high molecular weight pipe resin polyethylene defined by ASTM D3350 having a cell classification of 345564C as polyethylene type III, grade, PE4710. Pipe shall be Iron Pipe Size – ID ASTM D2239 – SIDR 7 and have a working pressure of 200 PSI at 73.4 degrees F. The polyethylene extrusion compound from which the PE pipe and tubing are

extruded shall be made of virgin quality material. The polyethylene pipe or tubing shall be marked in accordance with ASTM D-2239 for IPS pipe sizes and carry the National Sanitation Foundation (NSF) seal of approval. See Standard Details for installation procedures.

G. Air and Vacuum Relief Valve Assemblies

Air and Vacuum Relief Valve assemblies shall be APCO No. 143-C, Crispin UL10 or District approved equal for one (1) inch assemblies and APCO No. 145-C, Crispin UL20 or District approved equal for two (2) inch assemblies, or approved equal, equipped with a brass plug on top service port, and shall conform to WSDOT/APWA 9-30.3(7).

H. Hydrant Guard Posts

Hydrant guard posts shall be reinforced concrete posts, 8"x8"x6' long, 8” diameter x 6’ long, or 9" diameter x 6' long. The same size and type of guard posts shall be used around each hydrant.

2.3 SEWER SYSTEMS

A. Sewer Pipe and Appurtenances, Non-Pressure

Gravity sewer pipe shall be either PVC Pipe for Non-Pressure (Gravity) Sewer Service or PROTECTO 401 ceramic epoxy lined Ductile Iron pipe as specified herein. Pipes with slopes greater than or equal to twenty (20) percent shall be PROTECTO 401 ceramic epoxy lined Ductile Iron pipe or C-900 PVC. C-905 PVC pipe may be considered for lines which are fourteen (14) inches in diameter or greater.

B. Sewer Pipe and Appurtenances, Pressure

High pressure sewer pipe and appurtenances shall be Ductile Iron or HDPE pipe as specified herein.

C. Side Sewer Pipe, Non-Pressure

1. Gravity side sewer pipe shall conform to the requirements of the Sammamish Plateau Water and Sewer District “Side Sewer Regulations”, latest edition.

2. New side sewer connections on an existing sewer main for a single connection (not in conjunction with a new development) shall conform to the requirements listed below.

    a. For existing D3034 PVC Sewer Main (less than 20 feet in depth), the side sewer connection shall be one of the following:

        - Cut-in PVC side sewer tee

        - Romac “SST” Stainless Steel Tapping Sleeve (w/ stainless steel flange), with FLxMJ adapter with PROTECTO 401 ceramic epoxy lining and gasket sized for D3034 PVC side sewer. Romac side sewer saddle, Model CB, is NOT allowed.

b. For existing C900 PVC Sewer Main (20 feet or greater in depth), the side sewer connection shall be a cut-in tee of one of the following materials:

- C900 PVC side sewer tee with a C900 side sewer up to the transition point to D3034 PVC
- Epoxy-lined ductile iron tee with a C900 side sewer up to the transition point to 4-inch D3034 PVC

c. For existing ductile iron Sewer Main (20 feet or greater in depth), the side sewer connection shall be a cut-in tee of epoxy-lined ductile iron, with a C900 side sewer up to the transition to 4-inch D3034 PVC or Romac "SST" Stainless Steel Tapping Sleeve (w/ stainless steel flange), with FLxMJ adapter with PROTECTO 401 ceramic epoxy lining.

D. Side Sewer Pipe, Pressure

Grinder pump side sewer pipe shall conform to the requirements of the Sammamish Plateau Water and Sewer District "Side Sewer Regulations", latest edition.

E. Low Pressure Mainline Sewer Pipe and Appurtenances

Low pressure mainline sewer pipe shall be either two (2) inch or three (3) inch diameter high-density polyethylene plastic pipe (HDPE SDR 11), conforming to the materials requirements in the Sammamish Plateau Water and Sewer District "Side Sewer Regulations", latest edition.

F. Manholes

Galvanized steel shall not be used in manholes. See Standard Details for material requirements for standard manholes and for deep manholes.

1. Cast Iron Frames and Covers

Cast Iron frames and covers shall conform to the Olympic Foundry Company No. MH 30A Traffic Type or equivalent marked "SEWER" in two (2) inch raised letters. Castings shall conform to the requirements of ASTM A 48, Class 30 and shall be free of porosity, shrink cavities, cold shuts, or cracks or any surface defects which would impair service ability. Repair or defects by welding, or by the use of "smooth-on" or similar material will not be permitted. Cover shall have a maximum of one hole, and a rubber plug per the Standard District Detail shall be installed in the hole.

Manholes located outside of public rights-of-way shall be equipped with a 3-bolt, lockdown cover. All movable parts shall be made of noncorrosive metals otherwise arranged to avoid possible binding. The locking frame and cover shall be Olympic Foundry Company No. MH 30 D/T Traffic Type or equivalent marked "SEWER" in two (2) inch raised letters.

Manhole covers in pedestrian or bike lane areas shall have low embossment lids.

All manholes rings and covers shall be machine finished or ground on seating surfaces so as to assure nonrocking fit in any position, and interchangeability. At the request of the

District, there shall be made available at the foundry standard rings and standard covers for use by inspectors in testing fit and seating.

At the request of the District, there shall be made available at the foundry a testing device suitable for proving the capacity of the assembly to resist an uplift pressure on the lid equal to a 20-foot head.

All manhole frames and covers shall be identified by the name or symbol of the manufacturer. This identification shall be in a plainly visible location when the frame and cover is installed. In addition to the manufacturer's identification, the material shall be identified by the following "NOD" or "DUC" for nodular or ductile iron respectively. The manufacturer's identification and the material identification shall be adjacent to each other and shall be minimum 1/2 inch letters recessed to be flush with the adjacent surfaces.

2. Precast Manhole Components

Precast manhole components shall conform to ASTM C478 except as modified herein. Base section openings to receive pipe shall be circular and held to the minimum size practical to accommodate the pipe to be inserted to effectively seal the joint. Kor-n-Seal boots shall be used for all pipe penetrations. Connections shall conform to WSDOT/APWA 7-05.3. All manholes shall be channeled in the field. Pre-channeled manholes are not permitted.

Where the direction of future extensions from the manhole are known, a 2-foot stub and cap shall be installed in a Kor-n-Seal boot at that location and the manhole shall be channeled to receive the future flow. The 2-foot stub shall be removed and replaced when the future extension is installed.

Precast manhole elements shall be provided with steps and/or ladders such that the completed manhole will contain a continuous vertical ladder with rungs equally spaced at twelve (12) inches plus or minus 3/4 inch. The lowest rung shall be not more than sixteen (16) inches above the shelf, and the uppermost rung shall be not more than eighteen (18) inches below the street surface. Ladder rungs or handholds in the manhole neck area must be recessed 2 inches for improved clearance.

Joints between precast manhole elements shall be rubber gasketed with O-rings or approved equal conforming to AASHTO M198 and shall be grouted on the inside. Shop drawings of the joint design shall be submitted to the District for approval, prior to manufacture or purchase. Completed joints shall show no visible leakage and shall conform to the dimensional requirements of ASTM C478.

Drop manholes, wherever shown on the plans, shall conform in all respects to the requirements for standard manholes as specified above. Pipe and fitting materials shall be ductile iron and shall conform to the specifications for ductile iron pressure sewer main.

Standard precast cones shall provide an eccentric reduction from forty-eight (48) inches to twenty-four (24) inches and shall not be less than seventeen (17) inches in height. Precast cones shall conform to WSDOT/APWA 9-12.4.

3. Manhole Steps

Polypropylene plastic steps shall be a polypropylene plastic step injection molded around a 1/2 inch diameter ASTM A-615, Grade 60, steel reinforcing bar. Step dimensions and pattern shall conform to the WSDOT/APWA 7-03.5.

4. Ladders

Precast manhole base sections shall be provided with a ladder as shown in the Standard Details. Ladders shall be made of the same material as the steps installed in the manhole sections. All ladders shall be subject to approval by the District.

Ladders shall be installed so they are centered on the largest shelf of the manhole or as otherwise directed by the District.

5. Manhole Lining

The manhole into which a force main or low pressure mainline discharges shall be lined 5-9 mils of Tnemec Series 141 Epoxoline or Wasser Aeroshield. In addition, the two manholes downstream of that manhole shall be lined with Tnemec Series 141 Epoxoline or Wasser Aeroshield if installed as part of the same project.

Existing manholes downstream of the force main discharge shall be lined with a material resistant to hydrogen sulfide corrosion, such as Wasser Aeroshield or Tnemec Series 141 Epoxoline. Submit product information for District review.

G. Air And Vacuum Relief Valve Assemblies

Air and Vacuum Relief Valve assemblies, size 2-inch, shall be stainless steel ARI D-020 with flanged connection.

H. Cleanout Assemblies

Cleanout assemblies for private side sewers shall not be allowed in the right-of-way or in private access tracts. Cleanout assemblies shall be brought up to finished grade with a locking cleanout cover (Olympic Foundry No. M-1025, marked “SEWER”). See District Standard Detail.

PART THREE - CONSTRUCTION STANDARDS

3.1 GENERAL

Except as otherwise noted herein, all work shall be done in accordance with the Plans and Specifications approved by the District and as recommended in the applicable American Water Works Association (AWWA) specifications and/or the latest edition of the Washington State Department of Transportation/American Public Works Association, Washington State Chapter (WSDOT/APWA) Standard Specifications for Road, Bridge, and Municipal Construction, and/or the 10 States Standards, and according to the recommendations of the material or equipment manufacturer. In the event of a conflict between the specifications herein, the District shall determine which specification controls. Work shall be done only by contractors licensed and bonded with the State of Washington and experienced in the installation of public water and/or sewer mains.

The District will strictly enforce the erosion and sedimentation control requirements of other agencies. These requirements include, but are not limited to, silt fencing, check dams, catch basin filtration, and removal of debris from sawcuts by appropriate methods such as vacuuming.

Temporary lot numbers, addresses, or building numbers shall be clearly marked on the curb. These numbers are used by the District for side sewer inspections and water meter installations.

No work shall be done until all necessary permits have been received from the agencies having authority.

A preconstruction conference and a minimum of 48-hours notice will be required prior to starting construction.

Inspection shall be by a representative of the Sammamish Plateau Water and Sewer District. All work shall be inspected prior to backfill. All pressure testing shall be done in the presence of the District. The Contractor shall supply all equipment and materials necessary for testing.

ANY APPROVED CHANGES TO THE PLANS AS APPROVED SHALL BE NOTED ON THE CONTRACTOR'S CONSTRUCTION DRAWINGS. THE CONTRACTOR'S MARKUPS SHALL BE PROVIDED TO THE DISTRICT AT THE COMPLETION OF CONSTRUCTION.

All locations of existing utilities shown are approximate and it shall be the Contractor's responsibility to verify the true and correct location so as to avoid damage or disturbance. Separations from potable water mains shall conform to Washington State Department of Ecology's "Criteria for Sewage Works Design".

Separation Between Other Utilities:

Water – in accordance with criteria set forth in DOE guidelines

Storm Sewer – Three (3) foot horizontal clearance

Underground Power, Gas, Telephone and Cable – Three (3) foot horizontal clearance is preferred when utilities are aligned parallel to the water main. In any case where less than

three (3) foot separation occurs, exact measurements to the utility lines shall be provided on the As-Built drawings.

Horizontal distances on construction drawings are measured between centerlines (e.g., centerlines of water fittings, centerlines of sewer manholes, etc.). Actual distances shall be computed at the time of staking.

Pipes Entering Structures – A flexible fitting shall be placed on all lines entering/exiting vaults or other structures, shall be located outside of the structure, and shall be located within five (5) feet of the structure. The flexible fitting shall provide protection from earthquake shaking by providing a point where the difference in vibration rates of the pipe and the structure can be absorbed. For watermains, for example, the fitting shall be a mechanical joint ductile iron sleeve, unless a mechanical joint bell connection occurs within 5 feet of the structure, outside of the structure, in which case the flexible fitting may be omitted.

Repaving shall be in accordance with the requirements of the agency having jurisdiction over the area to be paved. Monuments shall be restored by a Washington State licensed surveyor following completion of the overlay. Monument cases shall conform to King County standards; monument cases of other agencies (such as Snohomish County monument cases) will not be allowed.

A. Alignment

Unless otherwise specified, the location of the water mains, sewer mains, fittings, manholes and other appurtenances shall be staked out by a Washington State licensed surveyor supplied by the Developer/Contractor.

Contractor shall provide survey and layout required to perform the work. In all questions arising as to proper location of lines and grades, the District decision will be final. Cuts to invert of watermain and sewer main shall be shown on staking along with finish grade elevations. Deviations from the alignment shown on the plans must be specifically authorized by the District.

The Contractor's Washington State licensed surveyor shall place offset wood hubs (in soil) and/or steel pins (in asphalt or concrete) showing finished grade and cut depth to invert periodically (at least every 100 feet) along the pipeline alignment, and before and at all changes in alignment vertically or horizontally. Hubs/pins shall be placed far enough in advance of such alignment changes so that the manufacturers and specified deflections can be met. Hubs/pins shall be placed and marked for fittings and provide the District with a cut sheet containing the location, description, and elevation information for all hubs and pins. The Washington State licensed surveyor shall survey the installed invert elevation at the bell end of each piece of pipe and shall provide the District with a cut sheet of the invert elevations.

B. Trench Excavation

Trench excavation shall be in compliance with OSHA and WISHA regulations and requirements and shall meet the following requirements unless otherwise directed by the District or otherwise shown on the District-approved Plans.

Trenches shall be excavated to the line, depth and grade as approved by the District. Unless otherwise directed by Contract Documents or the District, trench excavation shall provide a minimum cover over the pipe of thirty-six (36) inches for water mains, forty-eight (48) inches for sewer mains, or as required to meet the depth requirements of sanitary sewer manholes or other necessary structures. Trench sides shall be excavated vertically. Trench widths shall be adequate for proper working space and the placement of any required bedding material under and around the pipe. The maximum trench width at the crown of the pipe shall be the outside diameter of the pipe barrel plus twenty-four (24) inches. For eighteen (18) inch diameter or larger pipe, the trench width at the crown of the pipe shall not exceed 1.5 times the inside diameter. If these widths are exceeded, a stronger grade of pipe and/or a higher classification and amount of bedding material shall be furnished, as directed by the District. Excavation for manholes or other structures shall be sufficient to provide a minimum of twelve (12) inches between their outer surfaces and the sides of the excavation.

The trench shall be kept free from water until jointing is complete. Surface water shall be diverted so as not to enter the trench. The Contractor shall maintain sufficient pumping equipment on the job to insure that these provisions are carried out. Gravel required in the bottom of the trench due to action of weather or workers shall be furnished by the Contractor. Boulders, rocks, logs, roots and other obstructions shall be entirely removed or cut out to the width of the trench and to a depth six (6) inches below pipe. Where material is removed from below grade, the trench shall be backfilled to grade with material which meets the District's standards for trench foundation gravel, and thoroughly compacted. Trenching operations shall not proceed more than 100 feet in advance of pipe laying.

If the native trench bottoms will provide a firm base for the subsequent placement of bedding, pipe and backfill, such native trench bottom may be used if the bottom is leveled and smoothed so that the entire length of pipe will rest on a well compacted base.

Trench bottoms shall be over-excavated as necessary to remove all unstable soil and eliminate "boiling" or "quick" conditions to such a depth as to provide a firm base. Over-excavated materials shall be replaced with trench foundation gravel as directed by the District. Trench foundation gravel shall be placed in no more than one foot lifts. When trenching operations cut through concrete or asphalt pavement, the pavement shall be removed to a width of eighteen (18) inches greater than the top width of the trench. The concrete shall be cut on a straight line. Asphalt paving shall be cut ahead of the trenching equipment to prevent excessive tearing up on the surfacing and to eliminate ragged edges.

C. Timbering and Sheeting

The Developer and/or Contractor shall provide and install timbering and sheeting as necessary to protect workers, the work, existing buildings, utilities and other properties. All timbering and sheeting above the pipe shall be removed prior to backfilling. All sheeting below the top of the

pipe shall be cut off and left in place. Removal of timbering shall be accomplished in such a manner that there will be no damage to the work or to other properties. All timbering and sheeting shall be to the Developer's design and shall meet all requirements as specified by OSHA and WISHA.

D. Pipe Laying

Each gravity sewer pipe shall be laid with bells upgrade and the invert of the pipe to the alignment and grade shown on the plans. Concentric joints shall be closed and a smooth invert provided.

Open ends of pipe or fittings shall be temporarily capped or plugged at all times.

A laser alignment tool shall utilized for alignment and be capable of self-leveling adjustable line and grade with locking features. The tool shall be inserted into the pipe with a Class IIIA < 5.0mW Laser Diode. For gravity sewers, adjustment to the line and grade shall be done by scraping away or filling in and tamping bedding material under the body of the pipe. No wedging or blocking of the pipe for adjustment to line and grade may be done.

Tees, wyes, elbows, valves, cleanouts, and other appurtenances shall be installed as shown in the standard details herein and at such locations as are shown on the plans or as otherwise directed by the District, and shall not be covered until the District has completed inspection and exact location has been recorded on the project field plan drawings by the Contractor.

For gravity sewers, variance from established line and grade shall not be greater than 1/32nd of an inch per inch of pipe diameter, but shall not exceed ½ inch or result in a level or reverse sloping invert. Variation in the invert elevation between adjoining ends of pipe due to non-concentricity of joining surface and pipe interior surfaces shall not exceed 1/64th of an inch per inch of pipe diameter or ½ inch in any event.

For sewers, the furthest downstream manhole shall be plugged in the downstream side and remain plugged throughout the period of construction, until final acceptance of the project by the District, to prevent debris and/or infiltration from entering the District system.

1. Ductile Iron Pipe

   Pipe laying shall in general conform to AWWA Standard C600 and the manufacturer's recommendations unless specifically contradicted by these Specifications. Special care shall be taken in handling pipe to avoid damaging ends, coatings and linings. Pipe shall be carried in slings and shall not be rolled or dragged. The pipe shall be examined for defects and damage while suspended before lowering into trench. Any damage shall be repaired before pipe is lowered into trench. All pipe shall be poly-wrapped in accordance with AWWA C600. Special care shall be taken to avoid damaging the polywrap during installation and backfilling.

2. PVC Pipe

   PVC pipe shall be bedded by hand with material containing no organic matter and no rocks larger than 3/4". When in the opinion of the District the native material will not meet this requirement, the District may require that bedding material be imported that meets the WSDOT/APWA classification of bedding material, Section 9-03.16. Pipe shall not be dropped or handled roughly and shall be checked for cracks and defects prior to installation. Any cracked or defective pipe shall not be installed.

3. HDPE (Low Pressure Mainline) Sewer Pipe

   HDPE pipe shall meet the installation requirements for PVC pipe. Joints shall be flanged or thermal fusion butt-welded and shall meet the requirements in the District's "Side Sewer Regulations", latest edition. Tracer wire shall be installed with the low pressure mainline to its termination point. A minimum of three (3) feet and a maximum of six (6) feet of cover shall be provided.

4. Contamination Prevention

   All pipe, fittings, and valves shall be carefully cleaned of all dirt and foreign materials as they are placed. The open ends of pipe and fittings shall be plugged with a temporary watertight plug at all times. Groundwater shall be prevented from entering the pipe at all times.

E. Pipe Joints

No joints shall be covered until examined and approved by the District. Joint material shall be installed according to the manufacturer's recommendations.

The pipe shall be properly aligned before the joint is forced home. During insertion of the tongue or spigot the pipe shall be partially supported by hand, sling or crane as required to minimize lateral pressure on the gasket and to maintain concentricity until the gasket is properly positioned. Pipe deflection and straightening shall be avoided once the joint is home, to prevent creep of the joint. Pipe must be constructed upslope.

Pressure shall be applied in making the joint to assure that the joint is home, as defined in the pipe manufacturer's standard instructions for installation. Restraint shall be applied to the line to assure the joints, once home, are held so by tamping fill under and alongside the pipe or by other appropriate means. When pipe laying is not in progress, the last pipe laid shall be plugged and blocked in such a manner as may be required to prevent water and debris from entering the pipe and creep during downtime.

F. Bedding Material Placement

Bedding material shall be placed from a minimum of six (6) inches below the pipe barrel to six (6) inches over the top of the pipe as shown on the standard details herein. Bedding material shall be placed before the pipe is installed and shall be spread smoothly so that the pipe is uniformly supported along the barrel. Subsequent lifts of not more than six (6) inch thickness shall be placed

to six (6) inches over the crown on the pipe and individually compacted to 90% of maximum density.

Removal of shoring or moveable trench shields or boxes shall be accomplished so that the bedding material placement is not disturbed.

In solid rock excavation, all ledge rock, boulders or stones shall be removed to provide a minimum clearance of eight (8) inches under the pipe. All material thus removed shall be replaced with bedding material.

G. Backfilling

No backfilling shall be performed until after the District has inspected the installation of the pipe and approved backfilling.

Native material that meets the requirements of Imported Backfill may be used for trench backfill upon approval by the District. In addition, 100% import backfill will be required for trench backfill during the wet season from October 1 to April 30.

Backfill material shall be moisture-conditioned as necessary to achieve the required compaction as described herein.

Fill and backfill materials to be placed within 6 inches of any structure or pipe shall be free of rocks or unbroken masses of earth materials having a maximum dimension larger than 3 inches. Backfilling shall be performed carefully so that no damage is done to the pipe or to its alignment. The District may direct the contractor to use special backfill techniques when it deems necessary.

Fill, backfill materials shall be selected or processed clean, fine earth, rock, or sand, free from grass, roots, brush, or other vegetation and organic materials. In areas such as existing paving, or in areas to be paved, where the District determines that minor settlement would be detrimental and the native excavated material is not suitable for compaction as backfill, the trench shall be backfilled with Imported Backfill material.

Materials not defined as unsuitable in Part Two – Material Standards are defined as suitable materials and may be used in fills, backfilling, and embankment construction subject to the indicated limitations. Suitable materials may be obtained from on-site excavations, may be processed on-site materials, or may be imported. If imported materials are required to meet the quantity requirements for the project, imported materials shall conform to the suitable material standards herein. Suitable materials are defined in Part Two – Material Standards.

All trenches shall be fully backfilled at the end of each day or, in lieu thereof, shall be covered by heavy steel plates adequately braced and capable of supporting vehicular traffic in those locations where it is impractical to backfill at the end of each day at the District's discretion. Backfilling operations shall not follow more than 100 feet from pipe laying operations. The above requirements for backfilling or use of steel plate will be waived in cases where the trench is located further than 100 feet from any traveled roadway or occupied structure. In such cases, however, barricades and warning lights meeting applicable safety requirements shall be provided

and maintained. All street crossings shall be backfilled with 1 1/4" crushed rock or as otherwise required by the District, or Local Agency (City/King County).

The pipe zone is defined as that portion of the vertical trench cross-section lying between a plane below the bottom surface of the pipe and a plane at a point above the top surface of the pipe as identified on the standard trench section detail. The bedding is defined as that portion of pipe zone backfill material between the trench subgrade and the bottom of the pipe.

Backfill material shall be placed and compacted around and under the pipelines by hand tools, unless otherwise approved by the District, to a height of six (6) inches above the top of the pipe.

The pipe zone shall be backfilled with suitable backfill material as described herein. Care shall be exercised to prevent damage to the pipeline coating, cathodic bonds, and the pipe itself during the installation and backfill operations. If a moveable trench shield is used during backfill operations the shield shall be lifted to a location above each layer of backfill material prior to compaction of the layer. The pipe or backfill shall not be displaced while the shield is being moved.

Backfill material around another utility crossing the water or sewer trench, such as gas, power, and fiber optic, shall comply with the backfill material requirements of that utility.

After the pipe zone backfills have been placed, backfilling of the trench zone may proceed. The trench zone is defined as that portion of the vertical trench cross-section lying as indicated between a plane above the top surface of the pipe and a plane at a point 18 inches below the finished surface grade, or if the trench is under pavement, 18 inches below the roadway subgrade.

Final backfill is all backfill in the trench cross-sectional area within 18 inches of finished grade, or if the trench is under pavement, all backfill within 18 inches of the roadway subgrade.

In addition, all backfill in right-of-way shall meet King County Road Standards, latest edition or appropriate governing authority's requirements.

The remaining backfill material shall be placed and compacted in layers not more than twelve (12) inches thick (two feet loose thickness), except that under roadways all backfill material shall be placed in layers not more than six (6) inches thick and mechanically compacted to the density of the existing subgrade, unless state or county requirements are more stringent. All backfill shall be compacted to 95 percent of maximum density (modified Proctor), unless otherwise directed by the District.

Where compaction densities are specified, measurements of density shall be by the modified AASHTO method. The District may require that an independent laboratory or King County Laboratory be employed to perform in-place density tests as proof of compaction which meets these Specifications. Compaction of native material as trench backfill shall be tested and certified by an independent laboratory. All costs shall be borne by the Developer. At its discretion, the District may request supply samples for testing of any material used in the work.

All test trenches and excavations including excavation, trench support, and groundwater removal for the field soils testing operations shall be provided as required by the District. The trenches

and excavations shall be provided at the locations and to the depths required by the District. Lawn areas destroyed by test trenching and excavation shall be regraded and re-landscaped with sod or hydro seeding as directed by the District.

Compaction testing shall be performed at a frequency of every five feet of depth and every 50 feet or with any changes in soils conditions, equipment, or operator personnel, or as directed by the District.

Regardless of the approval of the District as to manner of compaction, testing, acceptance by the District or otherwise, the Contractor/Developer shall repair any settlement of trenches and excavations that may occur within one year after completion and acceptance of the work by the District.

All pavement trench repair shall be provided in accordance with WSDOT/APWA 5-04.3(5)E and joints, surface smoothness and other related pavement construction shall be provided as specified in WSDOT/APWA 5.04, or as directed by the District.

H. Grade Lines

The contractor shall maintain the correct grades of sewer pipes. All bench marks, reference points and stakes shall be preserved and, in case of destruction of any of them, the resulting expense of restoration shall be borne by the Developer. Laser beam equipment for grade and alignment control shall be required.

I. Boring and Casing

In situations where the pipeline is to be bored, the pipeline shall be placed inside a casing. The casing pipe shall be smooth steel, bare pipe, 0.375 inch minimum wall thickness, and comply with ASTM A139, Grade C, with a minimum steel yield of 36,000 psi. To support the pipe inside the casing, pipe slides, casing spacers or 4" x 4" treated timbers with stainless steel straps shall be used to maintain vertical and horizontal alignment. After installation of the pipe in the casing is complete, the casing void shall be filled with sand or grout and the ends of the casing shall be grouted.

J. Pipe in Fills

Special treatment may be required at the discretion of the District for pipe in fills. This treatment may consist of compacting the backfill in 6-inch layers, careful choice of backfill materials, use of ductile iron pipe in short lengths, or such other reasonable methods or combinations as may be necessary in the opinion of the District.

K. Highway Crossings

This item applies only to rigid surface pavements. The Developer may use any method which provides satisfactory results and is acceptable to the governmental agency having control of the road and to the District, provided that the Developer restores the roadway to its original condition. Normally, highway crossings require the placing of a steel casing by jacking, tunneling or boring

and laying the pipeline within this casing. In case of tunneling, subsequent low pressure grouting through the pavement may be required.

L. Valve Installation

Before installation, valves shall be cleaned of all foreign material as hereinbefore specified for installation of pipe. Such blocking as the District may deem necessary shall be provided.

M. Valve Box Installation

The valve box shall be set centered on the valve operating nut. Valve boxes shall be set flush in pavement. In gravel roads the valve box shall be set in a three (3) foot diameter circular pad of two (2) inch thick asphalt, flush with the gravel surface. Installation of pavers or slip cans to adjust valve boxes to finished grade is not allowed.

N. Valve Marker Posts

Valve marker posts shall be set where required by the District for all valves outside of paved roads, except auxiliary valves for hydrants and Type I blowoffs. The marker shall be set on a line through the valve. The marker shall generally be set on the property line unless the District decides another location is safer or more conspicuous.

O. Concrete Blocking

Concrete blocking with specified material shall be cast in place and have a minimum of 1/4 square foot bearing against the fitting and bearing area against undisturbed soil as shown on the District's Standard Details. Additional bearing area may be required by the District. Blocking shall bear against fittings only and shall be clear of joints so as to permit taking up or dismantling joints. All fire hydrants, bends, tees and valves shall be blocked. All sewer force main bends and valves shall be blocked. The Developer/Contractor shall install blocking which is adequate to withstand full test pressure as well as to continuously stand operating pressures under all conditions of service.

P. Air and Vacuum Release Valve Installation

Location of the air release valves as shown on the Plans is approximate. The installation shall be set at the high point of the line.

Q. Access Roads

Access roads shall be used only where the use of public or private roads to which the District has access is infeasible or unavailable. Use of access roads to water and sewer facilities must be approved by the District. The road surfacing shall be appropriate to the neighborhood (such as gravel, grass-crete, paving, cobblestones, etc.). At a minimum, access roads shall be twelve (12) feet wide designed for H-20 loading, with a minimum of two-and-a-half (2-1/2) inches crushed surfacing base course and one-and-a-half (1-1/2) inches crushed surfacing top course, as defined in WSDOT/APWA Section 9-03.9(3), over a District-approved subgrade compacted to 95 percent relative compaction, unless otherwise approved by the District.

Turnarounds shall be provided at all dead ends, either a hammerhead type with forty-five (45) foot long legs and forty (43) foot inside radii, or circular with a diameter of eighty-five (85) feet. The maximum road grade for gravel access roads shall be 7 percent (7%). If the road grade is greater than seven percent, the access road surfacing shall be paved with asphalt concrete pavement.

R. Painting

1. Exposed parts above ground shall be painted as follows:

   a) Fire hydrants shall be painted with two coats of semi-gloss quick set enamel. The color shall be Safety Yellow.

   b) Hydrant posts, type I blowoff assemblies, water air/vacuum assemblies for water mains and water valve markers shall be painted with two coats of semi-gloss quick set enamel. The color shall be Safety Yellow.

   c) Distance to valves shall be marked with raised Cole numbers on the valve marker, blowoff stem, air vacuum assembly stem or Hydrant. Apply numbers with waterproof Liquid Nail.

   d) Sewer air/vacuum release valve vents shall be painted with two coats of semi-gloss quick set enamel. The color shall be Safety Green.

2. Piping and Appurtenances within Structures:

   a) Water Facilities: One (1) rust resistor prime coat and two (2) coats of semi-gloss quick set enamel. The color shall be Safety Blue.

   b) Sewer Facilities: One (1) rust resistor prime coat and two (2) coats of semi-gloss quick set enamel. The color shall be Safety Green.

3. Vaults:

   The exterior of vaults below grade shall be painted with two (2) coats of black bitumastic solution.

4. Meter Box Location stripes:

   Meter Box Location stripes (3 in. x 12 in.) shall be painted with two coats of semi-gloss, quick set enamel. The color shall be Safety Yellow.

5. Sewer Air/Vacuum Release Valve Vents:

   Two coats of semi-gloss quick set enamel. The color shall be Safety Green.

S. Raising Structures to Grade

The Developer/Contractor shall notify the District prior to raising any water or sewer system structures to grade. All water or sewer system structures (i.e. valves, manholes, clean-outs, monuments, etc) shall be raised within 48 hours of installation of ATB or Asphalt Concrete overlay unless directed by the District to raise said structures sooner.

3.2 WATER SYSTEMS

All water mains shall have a minimum cover of 36 inches below finished grade. Where utility conflicts occur, water mains shall be lowered to clear, except that water mains may not be installed under sewer facilities.

Where more than one fitting occurs in close proximity to each other (i.e., a tee and a valve), the fittings shall be flanged together.

A. Fire Hydrant Installation

Hydrant installation shall generally conform to AWWA Standard C600 unless specifically contradicted by the detail for Fire Hydrant Assembly included in the District's Standard Details. In addition, the fire hydrant run shall be installed with District approved restrained joints. The concrete guard posts as shown on the Standard Detail shall be installed where required by the District. Pumper nozzle shall face the road after installation is completed, unless otherwise specified. Hydrants shall be covered with a bag until operational.

No fences, rockeries, trees, or guardrails shall be installed between the fire hydrant and the main. A minimum of five (5) feet clear zone shall be provided between the fire hydrant and any rockery or structure.

B. Water Service Connections

Connections shall be installed with double strap type pipe saddle that uses stainless steel straps.

Installation shall be as shown in the District Standard Details. Splices or couplings in service lines will not be acceptable.

Draining the water system to install the meter setters will not be allowed. Water services shall be installed so that filings/shavings are removed

C. Meter Box Installations

Meter boxes shall be installed only in unimproved or landscaped areas not subjected to driving or parking. In unimproved or landscaped areas, meter boxes shall be set two (2) inches above the finished grade, including landscaping or mulch. Meter boxes shall be centered over the meter setter(s).

The area surrounding meter boxes shall be backfilled with backfill material conforming to Part 2.1 F (Native Backfill Material) or 2.1 G (Import Backfill Material). Maximum size particle shall be 2 inches. Sand or pea gravel shall NOT be used.

If paved or concrete areas are installed around meter boxes after the meter box is installed, the water service shall be abandoned at the main and a new water service shall be installed perpendicular to the main so that the new meter box is located in an unimproved area not subject to traffic.

Meter boxes may be located in or near driveways or paved areas only with written District approval, or as required by the District. Such meter boxes shall be traffic-bearing boxes as specified on the Standard Details. Meter boxes shall be set flush with concrete or asphalt surfaces (roadway, sidewalk, driveways, driving or parking surfaces, etc.).

When the meter box is installed in concrete paving, a 5/8-inch expansion joint shall be provided around the box with a eighteen (18) inch gap between the expansion joint and meter box on all sides.

Install a water meter marker post at the meter box location until landscaping is completed.

A twelve (12) inch by three (3) inch stripe shall be painted on the ATB or finished asphalt, perpendicular to the edge of the asphalt, to mark the location of each meter box. The color of the stripe shall be as per section 3-1.R(4) "Painting".

No fences, rockeries, trees, or guardrails shall be installed between the meter box and the main.

D. Backflow Prevention (Cross Connection Control)

Where the possibility of contamination of the water supply exists, the District will require that certain services be equipped with a backflow prevention assembly that is approved by DOH. The determination as to the need of a backflow prevention assembly shall be solely determined by the District.

Pursuant to Washington State Regulation WAC 246-290-490 and current District Resolution regulating the District's Cross Connection Program, the District shall receive a Backflow Prevention Assembly Test Report performed by a certified Washington State Tester, prior to acceptance of the system by the District.

Any transfer of water from a District water main to a vehicle or container must have District inspection and approval as to the method and equipment.

Any use of District water for construction purposes must be from a hydrant or other District-approved source with appropriate, District-approved cross connection control. District personnel will inspect the installation for conformance with District requirements.

E. Connections To Existing Water Mains

District standard testing connections shall be installed on new water main construction. Direct connection to the District's existing system shall not be made until the new water main is tested and accepted by the District. Following receipt of satisfactory purity tests, schedule with District (1 week minimum notice) for water main shutdowns. Following completion of new water system construction, testing, and acceptance by the District, remove testing connection and install

segment of ductile iron pipe, length to suit, with two long-pattern sleeves or as directed on the District-approved drawings. Installation and connection to the existing water system shall be with 100% District inspection.

Connections to the end of an existing water main line shall be made with a main line valve, sized the same as the main line size, and new main construction connected to the new valve. Exceptions shall be considered where there is an existing valve in close proximity to the new connection.

Tapping of existing DI pipelines where required by the District, shall be made under pressure with tapping sleeve and valve assembly. Joints shall be tested using normal test pressure prior to start of tapping existing main. District shall determine where tapping under pressure is required. Romac FTS 420, or JCM 412 fusion-bonded, epoxy coated, steel tapping sleeves with Type 316 stainless steel fasteners or approved equal shall be required.

Where cut-ins are to be made in existing pipes, the work shall be conducted at a time specified by District and in such a manner as to minimize the interruption of service. Necessary pipe, fittings and gate valves shall be assembled at the site ready for installation prior to the shutting off of water in the existing main. Once the water has been cut off, the work shall be prosecuted vigorously and shall not be halted until the line is restored to service.

Unless specifically provided for elsewhere in these Specifications, the Developer shall have the responsibility of giving at least 5 business days notice to the District of intention to disrupt service and shall give at least 72 hours notice to the affected water users. Water service shutdowns shall not be scheduled on Mondays or Fridays.

F. Operation of District Valves

Developer/Contractor shall not operate any valves, including fire hydrant valves, in any part of the District's water system, except in the presence of the District. **Developer and/or Developer's Contractor shall be fined for tampering with the District's water system if valves are operated without the District being present.** Developer shall notify the District 48 hours in advance of need to operate system.

3.3 SEWER SYSTEMS

A. Manholes

Precast manhole base sections shall be placed on a well-compacted bedding course of bedding material. The depth of the bedding shall be four (4) inches thick or greater, extending a minimum of twelve (12) inches beyond the outside perimeter of the base section. The balance of any remaining excavated area shall be filled with imported backfill material and well-tamped to the level of the top of the bedding before the manhole is set in place. The bedding shall be well-tamped and made smooth and level to assure uniform contact and support of the precast elements.

All lift holes (inside and outside) and the inside face of rubber gasket joints between precast sections shall be thoroughly wetted and then filled with grout, smoothed and all joints pointed.

Precast sections shall be placed and aligned to provide vertical sides and vertical alignment of ladder rungs. Eccentric cone shall be positioned to allow vertical access to the ladder. The completed manhole shall be rigid, true to dimension and watertight.

Manholes eight (8) feet and less in depth shall have cones a maximum of two (2) feet in height.

Manholes twenty (20) feet or greater in depth shall conform to the Deep Manhole detail on the Standard Details.

Manholes set in paved streets or other paved areas shall be set flush with finished grade of the paving and when required, the manhole frame shall be tilted to conform to the grade on the paved surface.

Manholes set in gravel shoulders or other non-paved improved areas shall be set flush with the finished grade and in an asphalt apron six (6) feet in outside diameter. The asphalt apron shall be tapered per the Standard District Details. The manhole frame shall be tilted to conform to the grade of the finished surface.

Manholes not set in paved or improved areas shall be set at a finished grade six (6) inches to twelve (12) inches higher than the surrounding terrain to prevent surface water infiltration into the system, unless plans specify otherwise. Manholes shall be surrounded by an asphalt apron as shown on the Standard Details.

Manholes installed in wet areas shall have additional measures added to ensure no water infiltration. Consult with District for requirements.

Manhole channels shall be made to conform to the sewer grade and shall be brought together with well-rounded junctions. Channel sides shall be carried up vertically to the top of the largest pipe's diameter and rounded to the shelf at the largest pipe's crown elevation. The concrete shelf shall be smoothly finished with slopes to drain.

The openings through which pipes come into the manhole shall be completely and thoroughly grouted. A watertight joint (Kor-n-Seal boot or approved equal) shall be provided where the pipe passes through the manhole wall.

B. 6-Inch Side Sewer from Main to Property Line

The strength class of side sewer pipe shall be the same as the sewer pipe to which it connects and these specifications shall be applicable to side sewer work.

The slope of side sewers shall not exceed one (1) foot vertical to one (1) foot horizontal when using SDR 35 D3034 PVC, nor be less than 2 percent . If ductile iron or C900 piping is used along with the corresponding change in mainline material, then slope is allowed a maximum of two (2) foot vertical to one (1) foot horizontal nor be less than two percent. When change in slope between connecting pipes exceeds two (2) inches per foot, standard 1/8 bends shall be used. All side sewers shall be plugged and plugs blocked.

The end of all side sewers at the property lines shall be marked with a vertical twelve (12) foot long, 2"x4" board, the bottom of which shall be located at the invert of the elevations of the side sewer and top of which shall be painted white and extend above the ground. The board shall be wrapped from one end to the other with a 12 AWG insulated wire. The wire shall be securely wrapped around the end of the side sewer. The word "SEWER" shall be stenciled in two (2) inch high black letters on the upper end of the board. Depth to invert shall be clearly shown on the board. For inverts that are deeper than 12 feet, the boards shall be extended to at least 4 feet above finish grade and the corresponding measurements to invert shall also be clearly shown.

C. Connection to the Existing Sewer System

Extensions to the District's sewer system shall be isolated from the existing system with a plug installed at the existing manhole in the presence of District personnel and maintained by the Developer until the sewer extension is accepted by the District. **Developer and/or Developer's Contractor shall be fined for tampering with the District's sewer system if the plug is removed or a connection is made without the District being present.** Developer shall notify the District 48 hours in advance of need to install or remove plug or connect to the system. No connections shall be made to the existing sewer system without the presence of the District. Written application for connection shall be made to the District, and the connection shall be made at a time agreed upon with the District.

1. Connections to existing manholes shall be made as follows:

   a) If the manhole is "live", the manhole channel shall be tightly covered to prevent debris from entering the sewer line prior to breaking into the manhole wall. Immediately after the connection is made, the new pipe shall be plugged and blocked in such a manner that no water shall enter into the existing manhole. The plug shall not be removed without permission of the District. Additional upstream plugs may be required by District.

   b) If the existing manhole is not "live", a plug shall be installed in the downstream or discharge pipe of the existing manhole in addition to the above. Where new connections to existing manholes require an outside drop, two plugs for each drop shall be installed and blocked.

   c) The existing manhole shall be rechanneled

2. Connections to existing sewer main shall be made as follows:

   a) The existing line shall be cut and removed from the manhole excavation. A new manhole shall be installed in place of the removed existing line. The manhole shall be precast, minimum 48-inch diameter. The manhole shall be placed with a full stick of pipe centered through the manhole and coupled to both ends of the existing sewer line. The new sewer line inside the manhole shall be cut out and the manhole channeled. Sewage must be bypassed during channelling.

3. Connections of side sewers to an existing sewer line shall be made as follows:

   a) The connection to an existing sewer main shall be made with a cut in tee with slip couplings. If the connection is made to the existing sewer pipe while in operation, the existing sewer pipe shall be cut with a saw or approved equal to give a smooth beveled edge of the proper size and the lip shall be filed smooth. Each connection shall be bedded with a minimum of six (6) inches of bedding material. Unsuitable foundation material shall be over-excavated and replaced with bedding material.

   b) Alternatively, the connection shall be made with Romac "SST" Stainless Steel Tapping Sleeve (with stainless steel flange), with Protecto 401 FLxMJ adapter and gasket sized for appropriate side sewer pipe material; or an Insert-a-Tee. Romac side sewer saddle, Model CB, is NOT allowed.

D. Side Sewers (Gravity or Pressure)

Gravity or pressure (grinder pump) side sewers shall be installed and tested in accordance with the Sammamish Plateau Water and Sewer District "Side Sewer Regulations", latest edition.

E. Use of Ductile Iron Pipe for Sewers

The contractor shall furnish repair kits and shall repair the PROTECTO 401 ceramic epoxy lining damaged during installation, welding and/or field cutting operations.

F. Lift Stations

Lift stations shall be installed per District-approved plans and specifications. Lift stations shall be tested with representatives of the District, Developer, Contractor and all sub-contractors involved with the lift station present. Developer/Contractor shall furnish the District with three (3) copies of the Operation and Maintenance Manuals for the Lift Station in labeled binders.

3.4 TESTING FOR WATER AND SEWER PIPELINES

A. Hydrostatic Tests For Ductile Iron Water and Sewer Mains

Ductile iron water and sewer main installations shall be subjected to a hydrostatic pressure test of 250 PSI for a minimum of 15 minutes, before leakage measurement starts. Location of the test pump shall be approved by the District. It shall then be held at this pressure, without pumping, and any leaks or imperfections developing under said pressure shall be remedied by the Contractor before final acceptance of the work. Leakage shall be measured by approved means in the presence of the District. The Contractor shall provide all necessary equipment to allow the District's inspectors to use their gauges and equipment and shall perform all work connected with the tests. Tests shall be made after corporation stops and service lines are installed, and the trench is backfilled and compacted. All valves within the section being tested shall be open, if possible. No more than 1,500 feet of 8-inch main can be tested at one time. Butterfly valves shall be tested at 150 psi above the static water pressure, with a maximum pressure of 250 psi unless otherwise noted.

Allowable leakage in gallons per fifteen minutes per 1,000 feet of pipe:

2" - 0.06 gallons	8" - 0.24 gallons	14" - 0.42 gallons	20" - 0.59 gallons
4" - 0.12 gallons	10" - 0.30 gallons	16" - 0.48 gallons	24" - 0.71 gallons
6" - 0.18 gallons	12" - 0.36 gallons	18" - 0.54 gallons	

B. Hydrostatic Tests For HDPE Water and Sewer Mains

HDPE water and sewer main installations shall be subjected to a hydrostatic pressure test of 1.5 times the rated operating pressure of the pipe. Location of the test pump shall be approved by the District. To establish equilibrium, the pipe shall be raised to the test pressure and allowed to stand without makeup pressure for 2 to 3 hours to allow for expansion of the pipe, unless otherwise approved or directed by the District. After equilibrium is established, the test section shall be pressurized to 1.5 times the rated operating pressure of the pipe. The pump shall be turned off and the final test pressure shall be held for 1, 2, or 3 hours as determined by the District at the time of testing. The amount of "make up" water shall be measured in the presence of the the District Inspector, utilizing a District-approved method. The allowable amounts of make up water for expansion during the leak test are as listed below (US Gallons / 100-feet of pipe):

Nominal Pipe Size (inches)	1 – Hour Test	2 – Hour Test	3 – Hour Test
3	0.10	0.15	0.25
4	0.13	0.25	0.40
6	0.30	0.60	0.90
8	0.50	1.00	1.50
10	0.80	1.30	2.10
11	1.00	2.00	3.00
12	1.10	2.30	3.40
14	1.40	2.80	4.20
16	1.70	3.30	5.00
18	2.00	4.30	6.50
20	2.80	5.50	8.00
22	3.50	7.00	10.50
24	4.50	8.90	13.30
28	5.50	11.10	16.80
32	7.00	14.30	21.50
36	9.00	18.00	27.00
42	12.00	23.10	35.30
48	15.00	27.00	43.00

Under no circumstances shall the total time under the test exceed eight (8) hours at 1.5 times the pressure rating. If the test is not completed due to leakage, equipment failure, etc., the test section shall be allowed to "relax" for eight (8) hours prior to the next test.

Any leaks or imperfections developing under said pressure shall be remedied by the Contractor before final acceptance of the work. The Contractor shall provide all necessary equipment to allow the District's inspectors to use their gauges and equipment and shall perform all work connected with the tests. Tests shall be made after corporation stops and service lines are installed. All valves within the section being tested shall be open, if possible.

C. Sterilization and Flushing Of Water Mains

Flushing of the water mains is to clean and sterilize the mains. Cleaning includes the flushing at a velocity and volume that will remove rocks and debris from the main.

Sterilization of water mains shall be accomplished by the Contractor in accordance with the requirements of the State Department of Health (DOH) and in a manner satisfactory to the District. During pipe installation the Contractor shall install chlorine granules per manufacturer's specifications to achieve a chlorine concentration of not less than 50 PPM. When a chlorine concentration of not less than 50 PPM has been established throughout the line, the valves shall be closed and the line left undisturbed for 24 hours. The line shall then be thoroughly flushed and water samples taken for approval by the local health agency.

If the main fails to pass purity tests the following procedure shall be followed. The section to be sterilized shall be thoroughly flushed at maximum flow prior to chlorination. Flushing shall be done in the presence of the District. Sections will ordinarily be sterilized between adjacent gate valves unless, in the opinion of the District, a longer section may be satisfactorily handled. Chlorine shall be applied by solution feed at one end of the section with a valve or hydrant at the opposite end opened sufficiently to permit a flow through during chlorine application. The chlorine solution shall be fed into the pipeline already mixed by an automatically proportioning applicator so as to provide a steady application rate of not less than 60 ppm chlorine. Hydrants along the chlorinated section shall be opened during application until the presence of chlorine has definitely been detected. When a chlorine concentration of not less than 50 ppm has been established throughout the line, the valves shall be closed and the line left undisturbed for 24 hours. The line shall then be thoroughly flushed and water samples taken for approval by the local health agency. Chlorination shall be repeated until water samples test satisfactory. The Contractor shall exercise special care in flushing to avoid damage to surrounding property.

The Contractor shall be responsible for disposal of treated water flushed from mains and shall neutralize the wastewater for protection of aquatic life in the receiving water before disposal into any natural drainage channel.

D. Cleaning And Jetting Of Sewer Mains

Prior to sewer pipe testing, all pipes and manholes shall be completely cleaned by jetting and vactoring. All debris from the jetting shall be removed at the first manhole where presence of

the debris is noted. In event that cemented or wedged debris or damaged pipe cannot be dislodged by jetting, the obstruction shall be removed and/or repaired. No debris or jetting water shall be permitted to enter the existing sewer system.

E. Testing Of Non-Pressure Sewer Pipe

Testing, which includes CCTV Inspection, of all non-pressure sewer pipe shall be conducted on a manhole-to-manhole basis. Testing for District's approval shall only be allowed after all other nearby utilities have been installed and their trenches backfilled and compacted, all manholes have been channeled, and all manholes and sewer mains have been cleaned as discussed above in Subsection D.

All wyes, tees and ends of side sewer stubs shall be plugged with gasketed caps or plugs, or an alternate acceptable to the District and securely fastened to withstand the internal test pressure. Such plugs or caps shall be readily removable.

If any section of the sewer system is found to have deficiencies or fails to pass a test, the Contractor shall locate and repair any and all deficiencies or substandard work. After all repairs are made, the Contractor shall retest the full run of sewer main, manhole-to-manhole, at the District's sole discretion. All work, testing and retesting, under this section shall be completed at the Developer's or Contractor's expense.

Final Approval of the sewer system is conditional on successful completion of all tests and Inspections.

1. Pressure Testing: All runs of non-pressure sewer pipe shall be air tested at 4 psi. The procedures set forth in this section shall be employed in conducting the testing. All facilities and personnel for conducting the testing under the observation of the District shall be furnished by the Developer and/or Contractor. All equipment and personnel to conduct the test shall be subject to the approval of the District. Although air testing may be performed for the convenience of the contractor prior to backfilling, no pipe shall be accepted until air tests have been performed after backfilling and compacting. The installed pipe shall be tested with low pressure air as set forth in WSDOT/APWA 7-17.3(2)F.. All test gauges shall be brought to the surface and allow District personnel to verify the testing without entering the manhole structure.

2. Deflection Testing: All sanitary sewers constructed of flexible pipe shall be deflection-tested not less than 30 days after the trench backfill and compaction has been completed. The test shall be conducted by pulling a solid-pointed mandrel with a diameter equal to 95% of the pipe diameter through the completed pipeline.

3. Infiltration Testing: The District may require an infiltration test if it appears that there is excessive infiltration after air tests are completed. The District shall also be the sole judge of whether or not this test is required. The maximum allowable limit for infiltration shall be as per WSDOT/APWA 7-17.3(2)C. Failure to pass the infiltration test shall be cause for rejection.

4. Television/CCTV Inspection: The District shall require all runs of sewer pipe to be inspected by the use of a television camera not less than 30 days after the trench backfill and compaction has been completed. The costs of making all inspections and re-inspections, shall be borne by the Developer or Contractor.

   a. CCTV Equipment:

      1) Television inspection equipment shall have an accurate footage counter that will display on the monitor and record the camera distance from the centerline of the starting manhole.

      2) The camera shall be of the remotely operated pan and tilt type. The rotating camera and light head configuration shall have the capability of panning 360° with pan and tilt capability of providing a full view of the pipe to ensure complete inspection of the mainline pipe and service laterals.

      3) The camera, television monitor, and other components shall be color. To ensure peak picture quality throughout all conditions encountered, the color camera shall be equipped with the necessary circuitry to allow for the remote adjustment of the optical focus iris from the power control unit at the viewing station. A variable intensity control of the camera lights shall also be located at the viewing station.

      4) Lighting and camera quality shall be suitable to allow a clear, in-focus picture for the entire inside periphery of pipelines extending at least ten (10) feet in front of the camera. In High Density Polyethylene (HDPE) or ductile iron poly-lined pipe, lighting should be sufficient enough to provide a clear view at least two (2) feet in front of the camera. The replay of the recorded video information shall be free of electrical interference and shall provide a clear stable image.

      5) Camera quality shall be suitable to provide a full 360° view of the pipe during the inspection.

      6) The travel speed of the camera shall be variable but uniform and shall not exceed 30 feet per minute. Any means of propelling the camera through the sewer line which would produce non-uniform or jerky movement of the camera, will not be acceptable.

      7) The television system shall be capable of performing line segment inspection in increments of 400 feet with one setup.

      8) The District's 1-1/2" target, or the contractor's District-approved target, shall be used

   b. CCTV Procedure:

      1) Just prior to performing the video inspection procedure, dyed water must be introduced into the nearest upstream manhole until observed at the nearest downstream manhole. This will insure that any pipe segments with bellies are easily

identified during CCTV inspection. Introduction of the dyed water shall be recorded.

2) All fog shall be evacuated from the pipeline and the pipeline kept clear of any fog during the CCTV inspection process.

3) Perform the inspection on all mainline sections from manhole to manhole.

4) Should access to a particular sewer segment be difficult, and where adjacent segments require television inspection, the CCTV Contractor may be allowed to complete the inspection of multiple sewer line segments with one setup. When multiple sewer line segments are inspected utilizing one setup, the CCTV Contractor shall zero the footage counter at each subsequent sewer manhole to establish a uniform starting point for each line segment televised

5) The interior of the pipe shall be carefully inspected to determine the location and extent of all deficiencies. Pipe conditions that result in a question of proper installation procedures shall be noted so that these conditions can be reviewed and, if necessary, corrected before actual acceptance of the sewer system.

6) At all service connections, the camera shall be stopped and the pan and tilt features shall be used to obtain a clear picture. At each service lateral, the camera shall be panned to view up each lateral or point of connection. Make note of any deficiencies through the use of Data Collection Software.

7) Prior to the beginning of each CCTV inspection, manhole identification numbers, as indicated on the record drawings, will be displayed in the title and shall become a part of the video record.

8) As directed by District, the Developer's Engineer or thier representative, the camera shall be stopped to view and analyze conditions that appear unusual or uncommon. The CCTV inspection technician shall, at all times, be able to move the camera through the lines in either direction without the loss of quality in the video presentation

c. The television-inspection format shall be provided on DVD in a MPEG file type that is able to be viewed using Windows Media Player, with separate MPEG files individually designated between each sewer run between manholes and listed on an index or menu. The file names shall reflect the manhole numbers on the plan for each sewer run between manholes. The associated television-inspection reports and the original DVDs shall be provided to the District immediately upon completion of the television-inspection. If contractor wants a copy, the contractor shall obtain one at same time as the original is completed. Provide the District with two copies of the written report for each sewer run between manholes.

F. Hydrostatic Tests For Pressure Sewer Pipe

After the trench is backfilled and compacted, all pressure sewer pipe shall be subjected to a hydrostatic pressure test in accordance with the test for the applicable pipe material, as specified previously in this section. All facilities and personnel for conducting the testing under the observation of the District shall be furnished by the Developer/Contractor and shall be subject to the approval of the District.

G. Testing For Low Pressure Mainline Sewers And Grinder Pump Systems

Testing shall conform to the requirements in the District's "Side Sewer Regulations", latest edition.

3.5 ABANDONMENT OF WATER AND SEWER FACILITIES

A. Abandonment of Water Mains

Water mains and valves to be abandoned shall be abandoned in accordance with the procedures listed below, so as to minimize the risk of leaking from abandoned valves and to minimize obstructions within the right-of-way. If an active water main that has an abandoned valve attached to it will be abandoned in the foreseeable future, as determined solely by the District, the abandoned valve can remain and its valve can and valve box shall be raised to finished grade, in accordance with A.1 below. However, if the valve is a double disc valve or if it is leaking, it must be removed in accordance with A.2 below. If an active water main that has an abandoned valve attached to it will NOT be abandoned in the foreseeable future, as determined solely by the District, the abandoned valve must be removed and the tee plugged or blind-flanged, in accordance with A.2 below.

1. For Abandoned Water Valve to Remain:
   a. Turn valve to the closed position.
   b. Remove valve box and valve can.
   c. Inspect valve for longevity of leaking from packing, etc.
   d. If valve is not leaking, cut out section of main from old valve.
   e. Install MJ plug or blind flange on valve.
   f. Plug old pipe with concrete. If pressure build-up from ground water entering the abandoned pipe is likely to occur (especially on hillsides), install a blocked MJ cap.
   g. Re-install the valve box and valve can, and install 6" grout in valve can to indicate a plugged valve.
   h. Backfill and compact.

2. For Abandoned Water Valve to Be Removed:
   a. Schedule a water main shutdown.
   b. Turn valve to the closed position.
   c. Remove valve box and valve can.

d. Cut out section of main from old valve.

e. Remove valve, and install blind flange or MJ plug on tee.

f. Plug old pipe with concrete. If pressure build-up from ground water entering the abandoned pipe is likely to occur (especially on hillsides), install a blocked MJ cap.

g. Backfill and compact.

B. Abandonment of Fire Hydrants

Fire hydrants to be abandoned shall be abandoned in accordance with the procedures listed below, so as to minimize the risk of leaking from abandoned valves and to minimize obstructions within the right-of-way. If an active water main that has an abandoned hydrant foot valve attached to it will be abandoned in the foreseeable future, as determined solely by the District, the abandoned foot valve can remain and its valve can and valve box shall be raised to finished grade, in accordance with B.1 below. However, if the valve is a double disc valve or if it is leaking, it must be removed in accordance with B.2 below. If an active water main that has an abandoned foot valve attached to it will NOT be abandoned in the foreseeable future, as determined solely by the District, the abandoned foot valve must be removed and the tee plugged or blind-flanged, in accordance with B.2 below.

1. For Abandoned Foot Valve to Remain:
   a. Turn 6-inch valve to the closed position.
   b. Remove valve box, valve can, and fire hydrant.
   c. If valve is not leaking, remove entire 6-inch pipe to hydrant, or cut out at least a 1-foot section of main from old valve.
   d. Install MJ plug or blind flange on valve.
   e. If hydrant run is not removed, plug both ends of hydrant run pipe with concrete.
   f. Re-install the valve box and valve can, and install 6” grout in valve can to indicate a plugged valve.
   g. Backfill and compact.
   h. If the existing hydrant is to be relocated due to some conflict, a new hydrant will be installed. The existing hydrant shall be delivered to the District’s offices.

2. For Abandoned Foot Valve to Be Removed:
   a. Schedule a water main shutdown.
   b. Turn valve to the closed position.
   c. Remove valve box, valve can, and fire hydrant.
   d. Remove entire 6-inch pipe to hydrant, or cut out at least a 1-foot section of main from old valve.
   e. Remove valve, and install blind flange or MJ plug on tee.
   f. If hydrant run is not removed, plug both ends of hydrant run pipe with concrete.

g. Backfill and compact.

h. If the existing hydrant is to be relocated due to some conflict, a new hydrant will be installed. The existing hydrant shall be delivered to the District's offices.

C. Abandonment of Water Services

Water services must be abandoned at the water main in accordance with the following procedure:

1. Excavate to corporation stop and saddle.
2. If saddle is a single strap or is not stainless steel or the stainless steel strap/saddle/corporation stop is in poor condition, schedule a water main shutdown, then replace the saddle with a stainless steel repair band.
3. If the saddle is a stainless steel double strap in good condition, it can remain in place. Shut off the corporation stop and plug the abandoned service line. Polybag all exposed components of the abandoned saddle.
4. Install a brass plug on the corporation stop.
5. On the setter side, cut the service line away from the setter, plug the line, remove the setter and dispose of properly (return to District and place in recycle bin).
6. Arrange with the District's Customer Service Department for disposition of the water meter and documentation of the last meter reading.
7. Backfill and compact.

D. Abandonment of Manholes or Vaults

Manholes, vaults, and similar underground structures must be abandoned in accordance with the following procedure:

1. Remove frame and cover or vault lid and hatch(es).
2. Remove manhole cone and sections or vault sections as necessary so that remaining structure is at least 4 feet below finished grade.
3. Plug all pipe penetrations with grout.
4. Fill remaining structure with pea gravel to within 3.5 feet of the top of the remaining structure.
5. Fill the next 3.5 feet (to the top of the remaining structure) with CDF.
6. Backfill and compact the top 4 feet with suitable native material or import backfill to finished grade.

E. Abandonment of Pressure Sewers (Force Mains, Low Pressure Force Mains, and Grinder Pump Lines)

All pressure sewer lines, including force mains, low pressure force mains, and grinder pump lines, must be abandoned in accordance with the following procedure:

1. Force mains, low pressure force mains, and grinder pump lines that are to be abandoned should be flushed in a sanitary way to eliminate a septic condition, if possible.

2. Mains shall be physically disconnected from District's system and plug all forcemains larger than 2 inches in diameter with grout. Plug or cap all pipe ends 2 inches or smaller.
3. If pressure build-up from groundwater entering the abandoned force main or low pressure force main is likely to occur (especially on hillsides), install a blocked cap or plug on pipe 4 inches or larger, and install a watertight connection (e.g., pack joint) for pipe smaller than 4 inches.
4. Possible pressure grouting of abandoned main may be required on a case-by-case basis.

F. Abandonment of Gravity Side Sewers

All gravity side sewer lines must be abandoned in accordance with the following procedure:

1. Side sewer shall be physically disconnected from District's system.
2. A plug shall be installed in the side sewer tee at the sewer main.
3. A cap shall be installed on both ends of the side sewer.

PART FOUR - DISTRICT STANDARD DETAILS AND NOTES

The following details are also shown on the District Standard Details Drawings (22” x 34” format).

WATER DETAILS

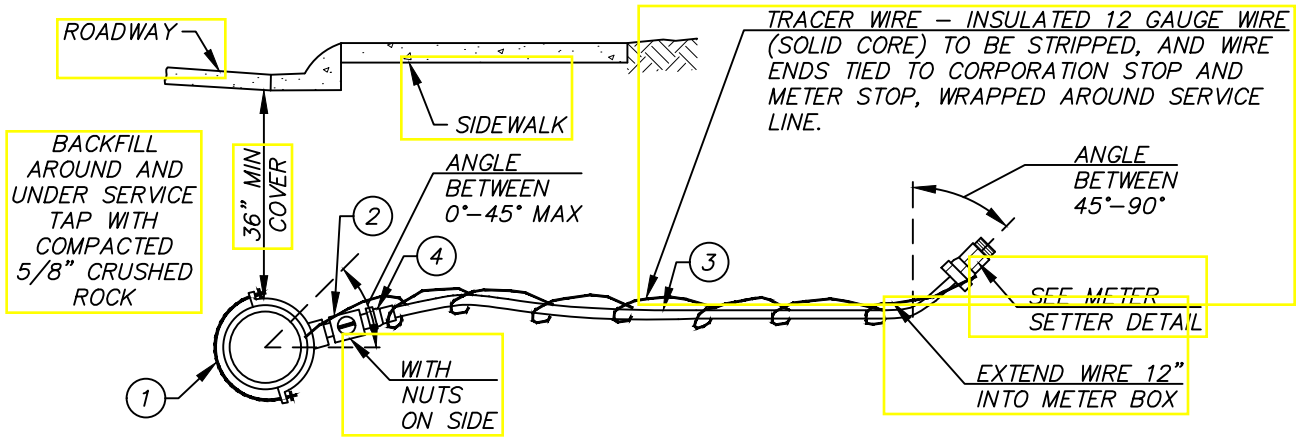

ITEM	DESCRIPTION	FORD PART NO	MUELLER PART NO	A.Y. MCDONALD	OTHER PART NO.	QTY
1	1" SADDLE I.P.T.	N/A	N/A	N/A	ROMAC 202S	1
2	1" CORPSTOP (MIPxMIP)	FB500–4	B2996	3131B1	N/A	1
3	1" HDPE PIPE	DRISCOPLEX 5100 ULTRA LINE SDR7 200 PSI IPS OR PW EAGLE				1
4	1" FIPxCOMPRESSION ADAPTOR	C16–44P	H15454.10	4754–33	N/A	2
	W/ STAINLESS STEEL STIFFENER	INSERT 53–72	505142	6136	N/A	2

* QUICK JOINT ACCEPTABLE, GRIP JOINT NOT ACCEPTABLE

1" SERVICE LINE

REV. 10/19/17

NOTES

1. ALL PIPE AND FITTINGS TO BE ASSEMBLED WITH TEFLON TAPE AND PIPE DOPE UNLESS OTHERWISE NOTED.
2. SERVICE LINES SHALL BE INSTALLED PERPENDICULAR TO THE WATER MAIN.
3. THE SERVICE LINE SHALL BE INSTALLED TO ALLOW FOR THE FAR SIDE OF THE METER BOX TO BE INSTALLED ON THE R/O/W AND CENTERED ON THE PROPERTY LINE OR EASEMENT LINE, UNLESS OTHERWISE DIRECTED BY THE DISTRICT.
4. THE METER BOX SHALL BE INSTALLED WITH THE FAR SIDE OF THE METER BOX (BACK SIDE) ON THE R/O/W, PROPERTY LINE OR EASEMENT LINE, IN LANDSCAPED (NON–TRAFFIC, NON–CRUSHED SURFACING TOP COARSE, NON–CONCRETE) AREAS.
5. BACKFILL AROUND METER BOXES AND SETTERS SHALL BE WITH IMPORTED BACKFILL, OR WITH NATIVE MATERIAL THAT MEETS THE REQUIREMENTS FOR IMPORTED BACKFILL, EXCEPT THAT 100% SHALL PASS 2" SQUARE. PEA GRAVEL OR SAND ARE NOT ALLOWED.
6. PROVIDE AT LEAST 18–INCHES CLEARANCE FROM ALL OTHER UTILITIES, BUSHES, AND OBSTRUCTIONS. PROVIDE AT LEAST 5–FEET FROM ALL TREES, AND STRUCTURES. NO FENCES OR ROCKERIES SHALL BE PLACED BETWEEN THE METER BOX AND THE MAIN.
7. METER BOXES LOCATED WITHIN 2 FEET OF DRIVEWAYS, PAVED AREAS, OR AREAS WHERE THE BOX CAN BE SUBJECTED TO VEHICULAR TRAFFIC, SHALL BE A TRAFFIC BEARING METER BOX AS NOTED BELOW. LOCATING A METER BOX IN AN AREA SUBJECT TO VEHICULAR TRAFFIC REQUIRES WRITTEN DISTRICT APPROVAL DURING DESIGN. METER BOXES THAT BECOME LOCATED IN TRAFFIC AREAS DURING OR AFTER CONSTRUCTION WITHOUT DISTRICT WRITTEN APPROVAL DURING DESIGN SHALL BE ABANDONED AT THE MAIN AND A NEW SERVICE SHALL BE INSTALLED TO A LANDSCAPED (NON–TRAFFIC) AREA.
8. WHERE TRAFFIC BEARING METER BOXES ARE USED WITHIN A CONCRETE SURFACE, A 5/8 INCH EXPANSION JOINT SHALL BE PROVIDED AROUND THE BOX WITH AN EIGHTEEN (18) INCH GAP BETWEEN THE EXPANSION JOINT AND METER BOX ON ALL SIDES.
9. APPROVED METER BOXES SHALL BE AS FOLLOWS:
   A) APPROVED METER BOXES FOR SINGLE SERVICES IN NON–TRAFFIC AREAS: CARSON 1220–12
   B) FOR SINGLE SERVICE IN TRAFFIC AREAS: FOGTITE B10 W/ALUMINUM LID.
10. MAINTAIN AND LEAVE SERVICE MARKER IN PLACE UNTIL LANDSCAPING IS DONE.
11. ANY DEVIATION FROM THESE ABOVE STANDARDS SHALL REQUIRE A WRITTEN VARIANCE REQUEST TO THE DISTRICT FOR REVIEW AND CONSIDERATION.

REV. 10/27/17

WATER SERVICE NOTES AND METER BOX REQUIREMENTS

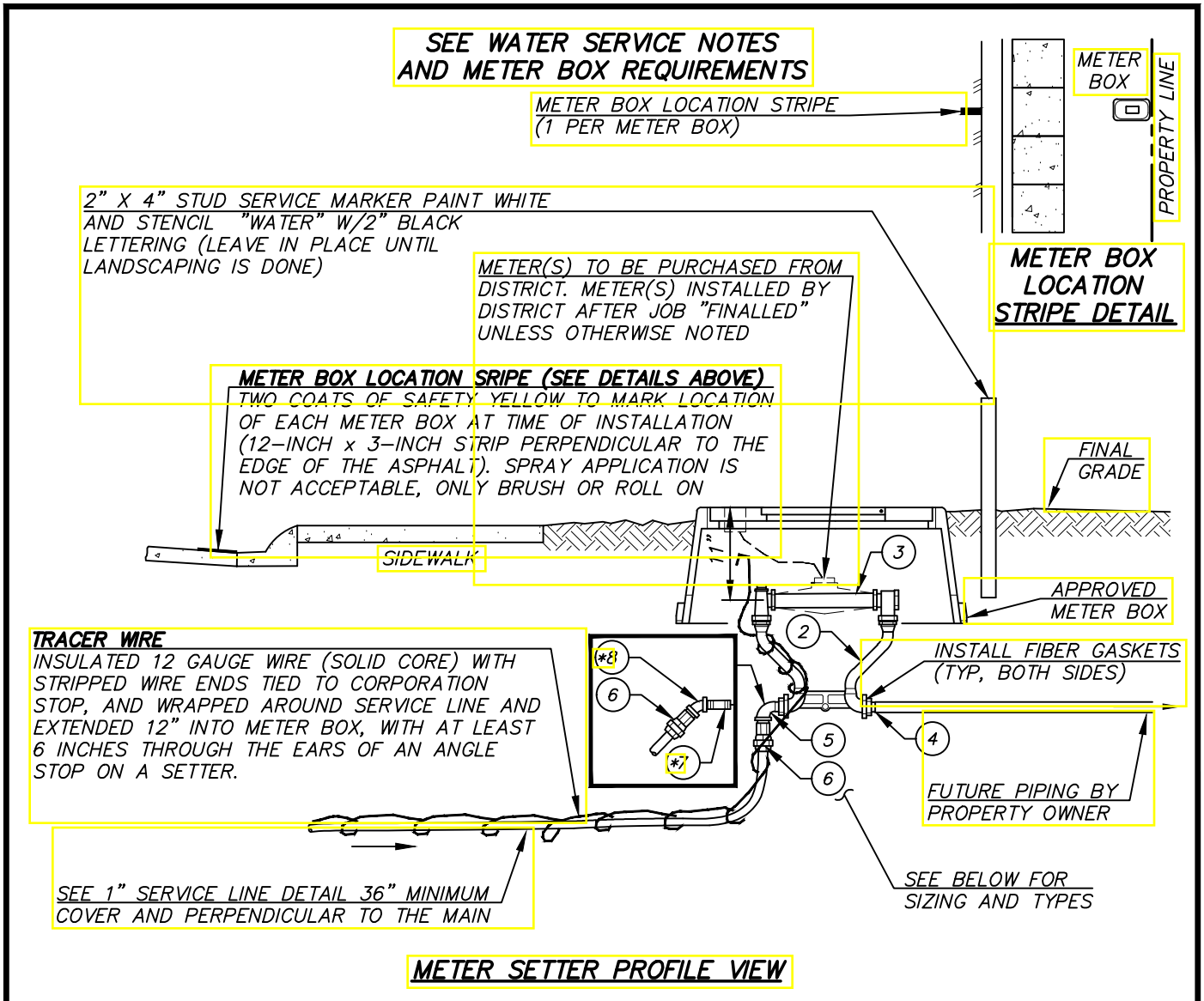

SINGLE 3/4" METER SETTER

ITEM	DESCRIPTION	FORD PART NO	MUELLER PART NO	A.Y. MCDONALD	OTHER PART NO	QTY
1	NOT REQUIRED					–
2	3/4" METER SETTER	VBH72-12W-11-33-NL	N/A	N/A	N/A	1
3	1" x 7-1/2" IDLER W/WASHERS	PVC SCH 80				1
4	3/4" PVC PLUG	PVC SCH 40/80				1
5	3/4" BRASS 90° STREET ELL					1
6	3/4" MIP x 1" IPS PAC JOINT W/ STIFFENER	FOC8634	H15429	473-CP	N/A	1
* 7	3/4" x 3" BRASS NIPPLE (OPTIONAL)					1
* 8	3/4" BRASS 45° BEND OR ELL (OPTIONAL)					1

SINGLE 1" METER SETTER

ITEM	DESCRIPTION	FORD PART NO	MUELLER PART NO	A.Y. MCDONALD	OTHER PART NO	QTY
1	NOT REQUIRED					–
2	1" METER SETTER	VBH74-12W-11-44-NL	N/A	N/A	N/A	1
3	1-1/4" x 11" IDLER W/WASHERS	PVC SCH 80				1
4	1" PVC PLUG	PVC SCH 40/80				1
5	1" BRASS 90° STREET ELL					1
6	1" MIP x 1" IPS PAC JOINT W/ STIFFENER	FOC8644	H15429	473-CP	N/A	1
* 7	1" x 3" BRASS NIPPLE (OPTIONAL)					1
* 8	1" BRASS 45° BEND OR ELL (OPTIONAL)					
* OPTIONAL						1

3/4" AND 1" METER SETTER

REV. 10/27/17

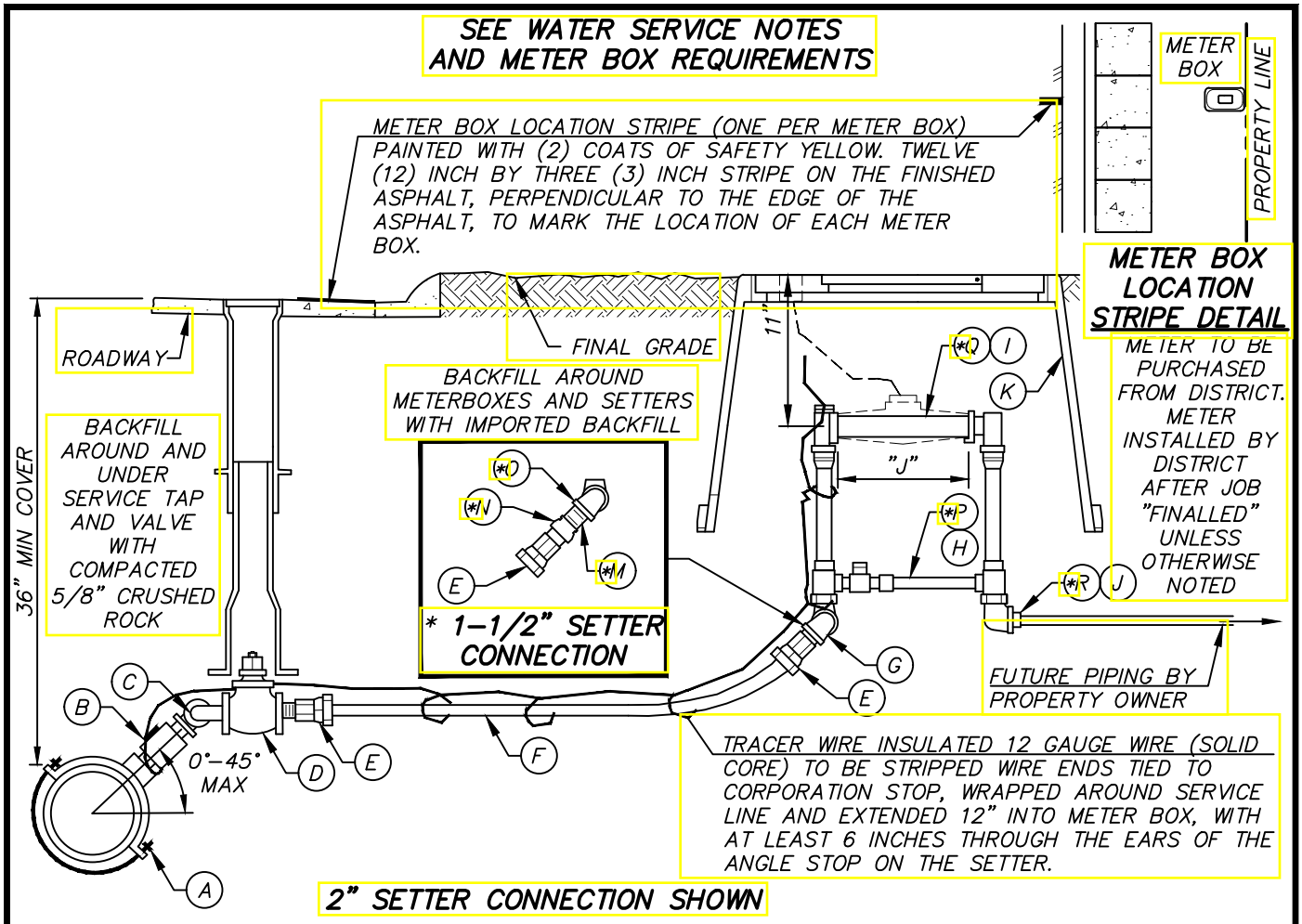

NOTES

1. ALL PIPE AND FITTINGS TO BE ASSEMBLED WITH TEFLON TAPE AND PIPE DOPE UNLESS OTHERWISE NOTED.
2. METER BOXES LOCATED WITHIN 2 FEET OF DRIVEWAYS, PAVED AREAS, OR AREAS WHERE THE BOX CAN BE SUBJECTED TO VEHICULAR TRAFFIC OR AT THE DIRECTION OF THE DISTRICT, SHALL BE A FOGTITE TYPE 2 METER BOX WITH A STEEL REINFORCED LID.
3. WHERE TRAFFIC BEARING METER BOXES ARE USED WITHIN A CONCRETE SURFACE, A 5/8 INCH EXPANSION JOINT SHALL BE PROVIDED AROUND THE BOX WITH AN EIGHTEEN (18) INCH GAP BETWEEN THE EXPANSION JOINT AND METER BOX ON ALL SIDES.
4. METER BOXES TO BE INSTALLED IN NON TRAFFIC AREAS. ALTERNATIVE LOCATIONS REQUIRE WRITTEN DISTRICT APPROVAL.
5. METER BOXES SHALL BE INSTALLED WITH THE FAR SIDE OF THE BOX (BACK SIDE) ON THE R/O/W, PROPERTY OR EASEMENT LINE, UNLESS OTHERWISE DIRECTED BY THE DISTRICT. SERVICES SHALL BE INSTALLED PERPENDICULAR TO THE WATER MAIN.

ITEM	QTY	DESCRIPTION
A	1	2" ROMAC SADDLE IPT, STYLE #202S, DOUBLE STRAP
B	1	2" CORPORATION STOP MIP X MIP, W/ NUT ON TOP (FORD# FB500, MUELLER# B2996, A.Y. MCDONALD# 3131B)
C	2	2" BRASS STREET ELBOW (SWING JOINT)
D	1	2" (RSGV) GATE VALVE X FIP W/SQUARE OPERATING NUT W/ CAST IRON VALVE BOX AND LONG SKIRT LID
E	1	2" PACK JOINT W/STAINLESS STEEL STIFFENER X MIP (FORD# C86-77, MUELLER # E15929)
F	VARIOUS	DRISCOPLEX 5100 ULTRA LINE OR PW EAGLE, 2" HIMOL POLY PIPE SDR-7 200 PSI
G	2	2" 90° BRASS STREET ELBOW
H	1	2" METER SETTER, FORD NO. VBH 87-12B-11-77 (ONLY) W/ BRASS STREET 90
I	1	2" IDLER SCH. 80 (J= 17") W/WASHERS
J	1	2" PVC PLUG, SCHEDULE 40/80
K	–	METER BOX – CARSON JUMBO #1730 W/P5L METER READING LID AND INSPECTION PLATE (MARKED FOR WATER) FOR NON TRAFFIC AREAS. WITH WRITTEN DISTRICT APPROVAL FOGTITE TYPE 2 (MARKED FOR WATER) W/ STEEL REINF. LID FOR TRAFFIC AREAS.
*M	1	1-1/2" x 3" BRASS NIPPLE
*N	1	1-1/2" x 2" BELL REDUCER
*O	2	1-1/2" 90° BRASS STREET ELBOW
*P	1	1-1/2" METER SETTER, FORD NO. VBH 86-12B-11-66 W/ BRASS STREET 90 OR VBH 76-12B
*Q	1	1-1/2" IDLER SCH. 80 (J=13") W/ WASHERS
*R	1	1-1/2" PLUG, SCHEDULE 40/80

1-1/2" AND 2" METER SETTER

REV. 10/19/17

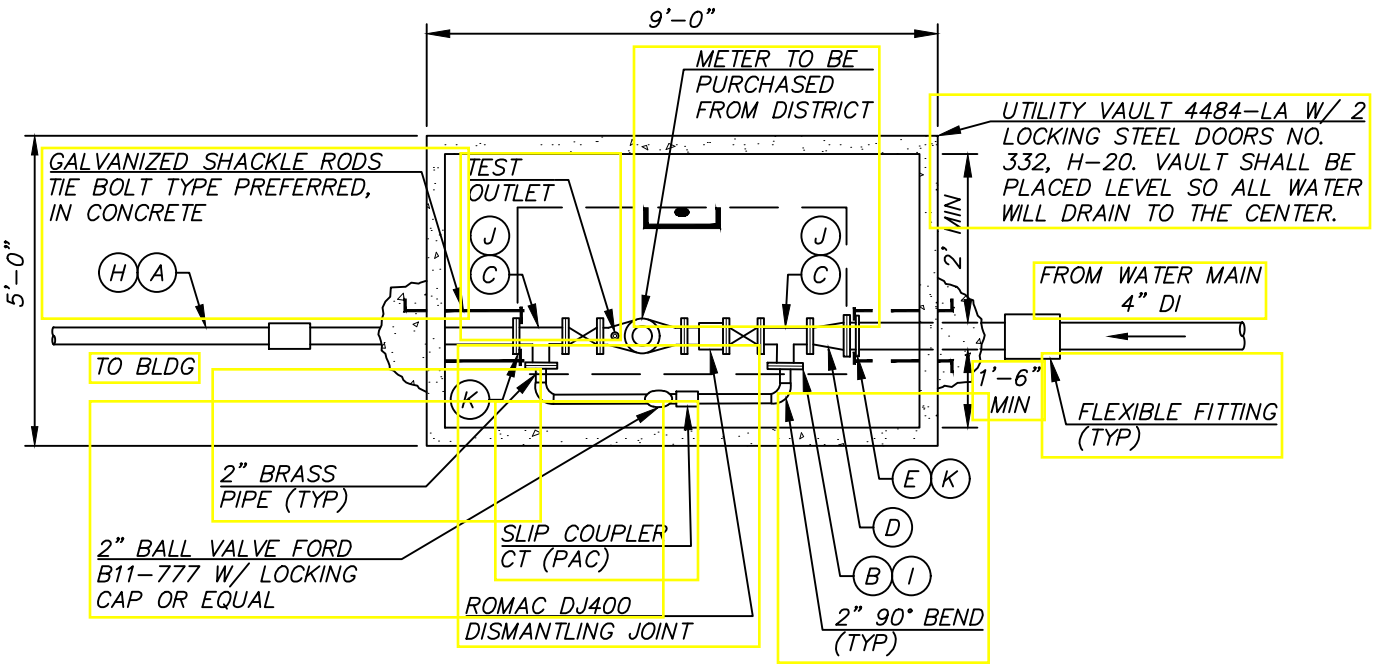

PLAN

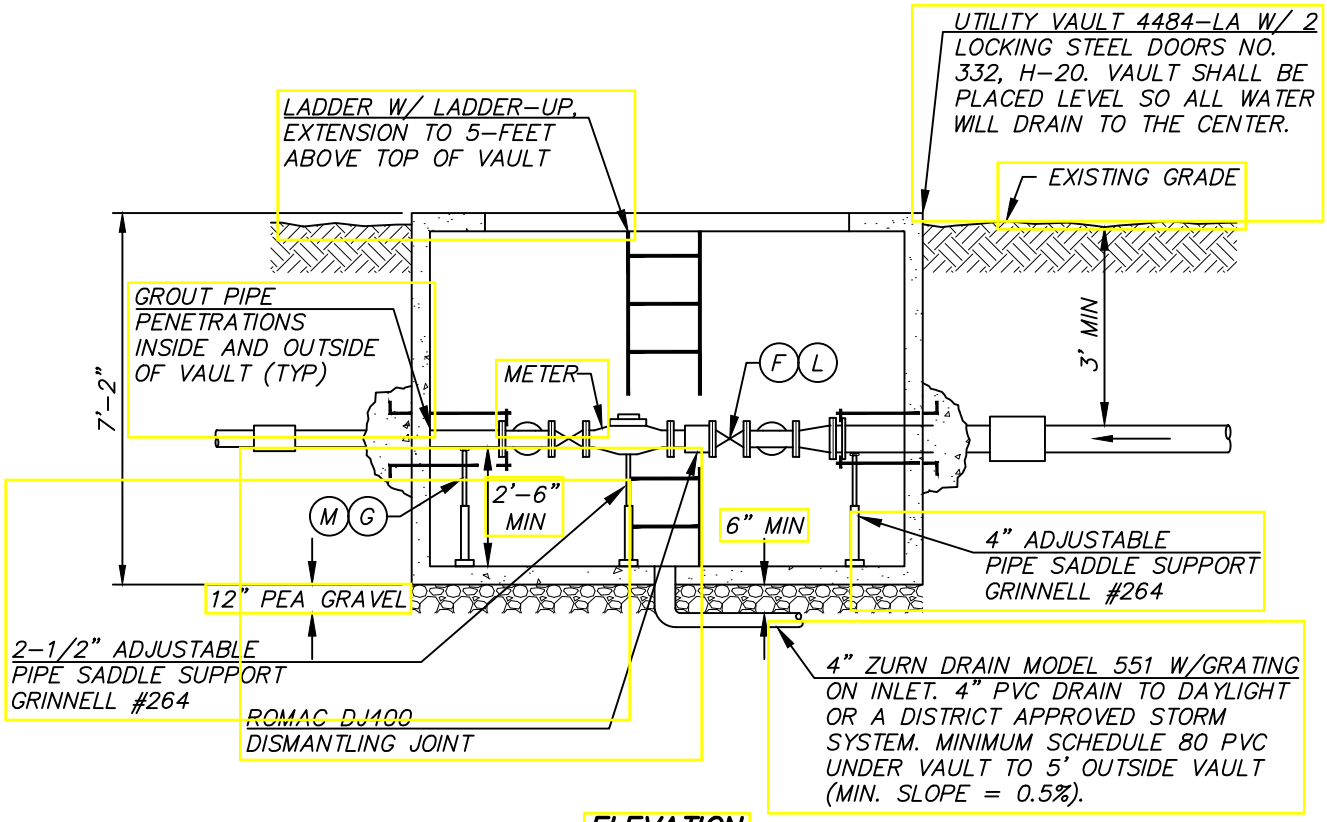

ELEVATION

NOTES

1. SEE 3" AND 4" METER NOTES AND MATERIALS FOR ADDITIONAL CONSTRUCTION REQUIREMENTS.
2. DISTRICT SUPPLIED METER IS A 3" OR 4" WITH TRPL REGISTER (TOUCH PAD MOUNTED IN VAULT LID).

3" AND 4" METER

REV. 10/20/17

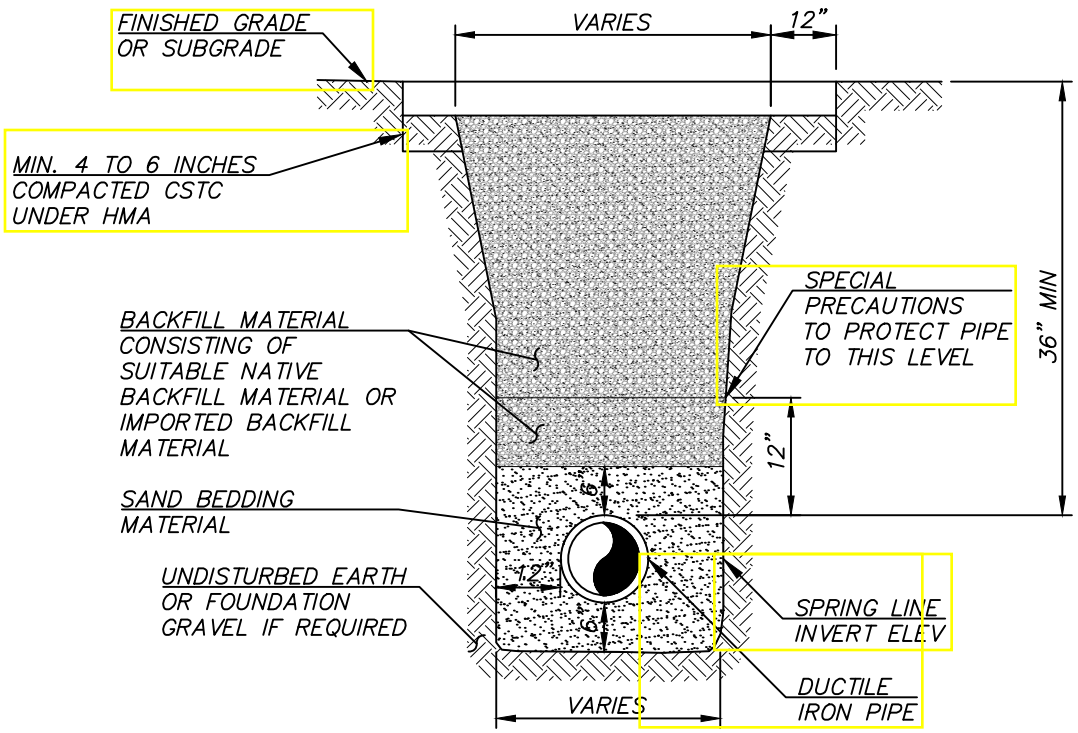

WATER MAIN TRENCH SECTION

REV. 10/30/17

	3" METER (ONLY)		4" METER (ONLY)
A	3" GALV	H	4" DI
B	3" BLIND FLG TAPPED 2" (2 PLACES TYP)	I	4" BLIND FLANGE TAPPED 2" (2 PLACES TYP)
C	3" TEE (FLG)	J	4" TEE (FLG) (TYP)
D	4" x 3" REDUCER (FLxFL)	K	4" FCA (TYP)
E	4" FCA (TYP)	L	4" GATE VALVE (FLG) W/HAND WHEEL OPERATOR (TYP)
F	3" GATE VALVE (FLG) W/HAND WHEEL OPERATOR (TYP)	M	4" ADJUSTABLE PIPE SADDLE SUPPORT GRINNELL #264
G	3" ADJUSTABLE PIPE SADDLE SUPPORT GRINNELL #264		

NOTES

1. VAULT COVER SHALL MATCH EXISTING GRADE OR 6" ABOVE IN UNIMPROVED AREAS.

2. PAINT SCHEDULE:
   EXTERIOR OF VAULT – BELOW GRADE TWO COATS OF BLACK BITUMASTIC SOLUTION (VAULT SHOULD BE DRIED WITH NO MOISTURE PRESENT PRIOR TO APPLICATION OF COATINGS)

   PAINT INTERIOR PIPING (NON BRASS) – ONE (1) COAT RUST RESISTOR PRIMER TWO (2) COATS SAFETY BLUE SEMI GLOSS PAINT

3. IF POSITIVE DRAINAGE FROM VAULT CANNOT BE ACHIEVED A SUMP PUMP SYSTEM WILL BE REQUIRED WITH DISTRICT APPROVAL. POWER SHALL BE SUPPLIED AND MAINTAINED BY THE DEVELOPMENT.

4. FLEXIBLE FITTING WHEN ENTERING AND EXITING VAULT WITHIN 5 FEET OF VAULT. IF (MJ) BELL CONNECTION IS WITHIN 5 FEET OF THE VAULT, FITTING MAY BE OMITTED (2 PLACES TYPICAL).

5. CORE DRILL 1–3/4" HOLE IN ONE OF THE HATCHES NEAR CENTER FOR INSTALLATION OF A ANTENNAE MOUNT, WHEN NOT IN TRAFFIC AREA.

6. USE 2" THREADED BRASS AND UNION AS NEEDED.

3" AND 4" METER NOTES AND MATERIALS

REV. 10/30/17

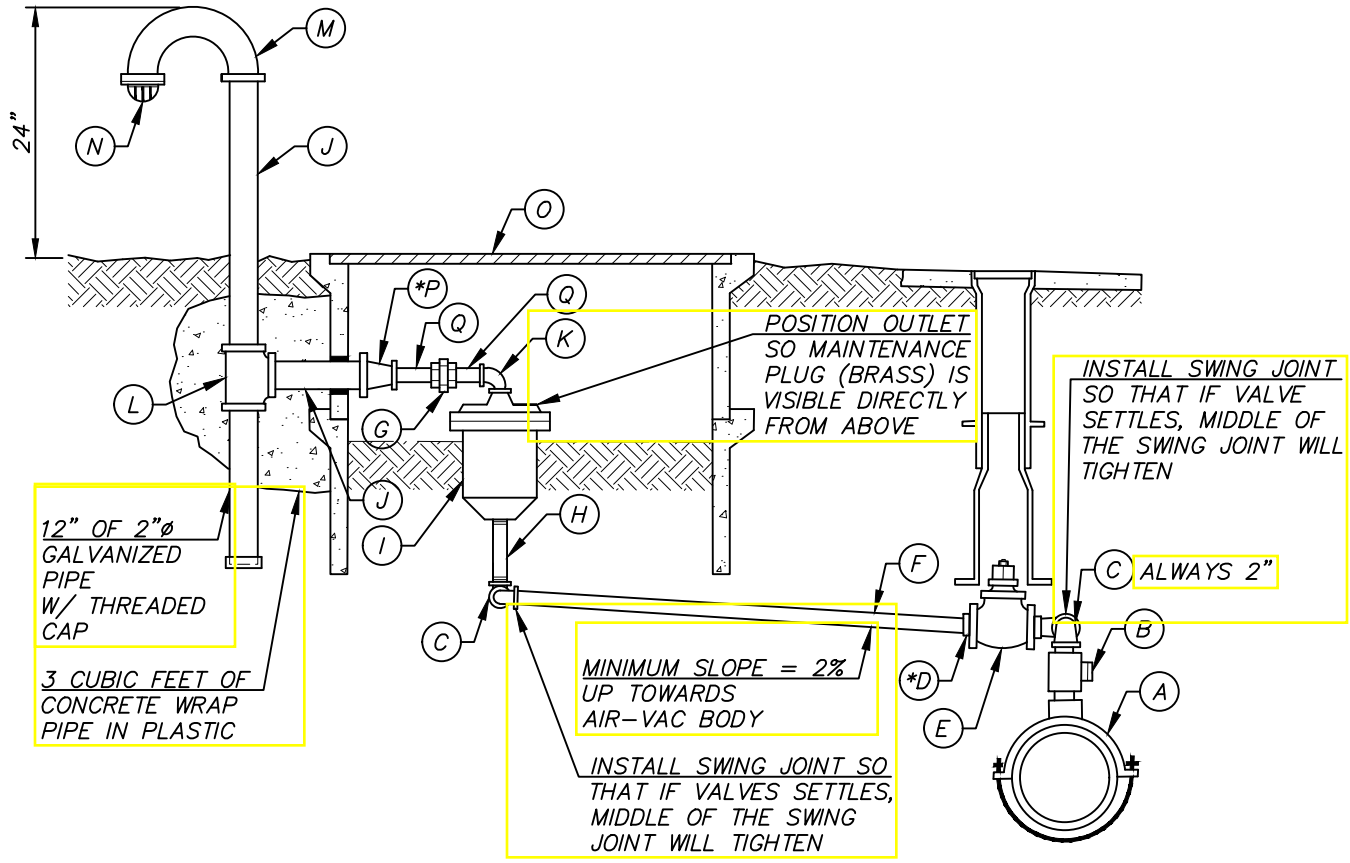

NOTES

1. ALL PIPE AND FITTINGS TO BE GALVANIZED EXCEPT WERE NOTED AND ASSEMBLED WITH TEFLON TAPE AND PIPE DOPE.
2. LOCATION OF THE AIR AND VACUUM RELIEF ASSEMBLY AS SHOWN ON THE PLANS IS APPROXIMATE.
3. INSTALLATION OF THE VALVE SHALL BE SET AT THE HIGH POINT OF THE LINE.
4. PAINT CANE ASSEMBLY WITH TWO (2) COATS OF SAFETY YELLOW AND APPLY COLE LETTERS TO CANE ASSEMBLY WITH FOOTAGE TO VALVE ON SIDE FACING ROADWAY IN 1.5" COLE NUMBERS. APPLY WITH WATER PROOF LIQUID NAILS.
5. PROVIDE 5-FOOT OF CLEARANCE FROM TREES, AND STRUCTURES, 18-INCHES FROM BUSHES.

MK	QTY	ITEM
A	1	2" ROMAC SADDLE I.P.T., DOUBLE STRAP STYLE 202S
B	1	2" CORPORATION STOP MIP X MIP, WITH NUT ON SIDE (NOT UNDER VALVE)
C	4	1" OR 2" BRASS STREET ELBOW, BRASS SWING JOINT W/ COUPLING OR 90° BEND
*D	1	2" X 1" BRASS BUSHING
E	1	2" GATE VALVE (FIP x FIP) W/2" SQUARE OPERATING NUT AND CAST IRON VALVE BOX AND LONG SKIRT LID
F	–	1" OR 2" THREADED BRASS PIPE (LENGTH TO SUIT) ON FIRM SUBGRADE
G	2	1" OR 2" GALVANIZED UNION
H	1	1 OR 2" BRASS NIPPLE
I	1	1" OR 2" APCO AIR AND VACUUM RELIEF VALVE (#143-C FOR 1" AND #145-C FOR 2") OR DISTRICT APPROVED EQUAL (REPLACE IRON ACCESS PLUG WITH BRASS PLUG)
J	–	2" GALVANIZED SCH. 40 PIPE (LENGTH TO SUIT)
K	1	1" OR 2" GALVANIZED STREET 90° ELBOW
L	1	2" TEE
M	1	2" RETURN BEND, SCH. 40 GALVANIZED
N	1	BEEHIVE STRAINER GREENBURG P-24-08, MALE FOR 2" PIPE
O	2	FOGTITE TYPE II CONCRETE BOX WITH STEEL LID, REINFORCED FOUR SIDES OR DISTRICT APPROVED EQUAL MARKED "A.V."
*P	1	2" X 1" GALVANIZED BELL REDUCER (NOT REQUIRED WITH A 2" ASSEMBLY)
Q	2	1" OR 2" GALVANIZED NIPPLE (ONLY ONE REQUIRED WITH 2")

* DENOTES ITEMS NOT REQUIRED WITH A 2" ASSEMBLY

1" AND 2" AIR AND VACUUM RELIEF VALVE ASSEMBLY REV. 10/20/17

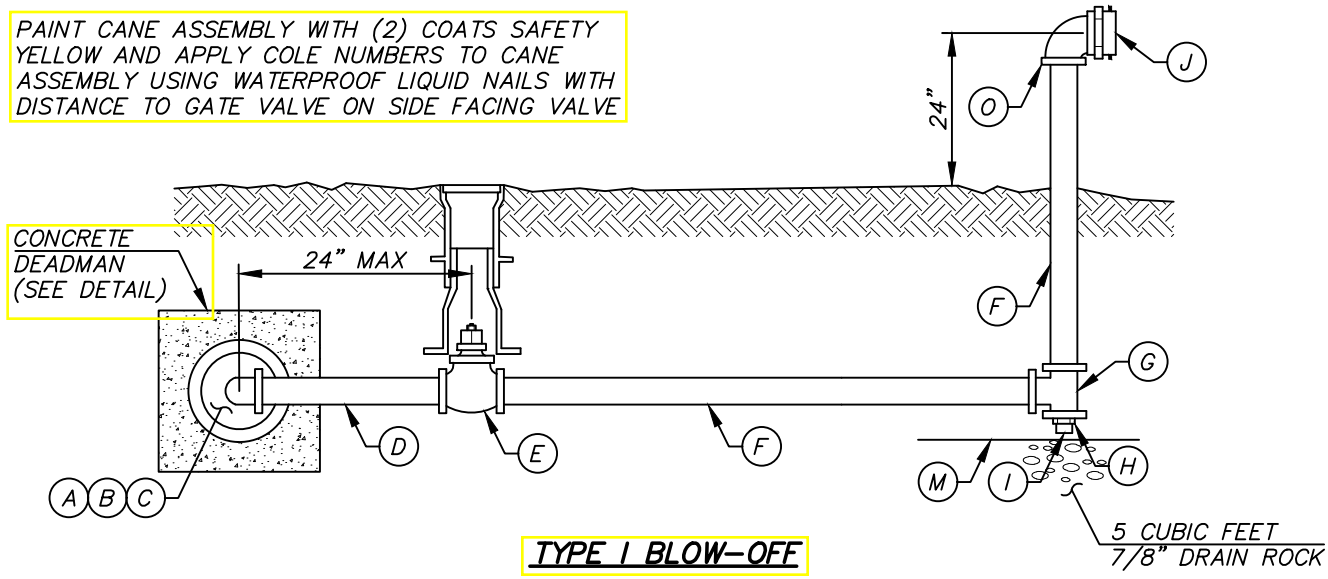

TYPE I BLOW-OFF

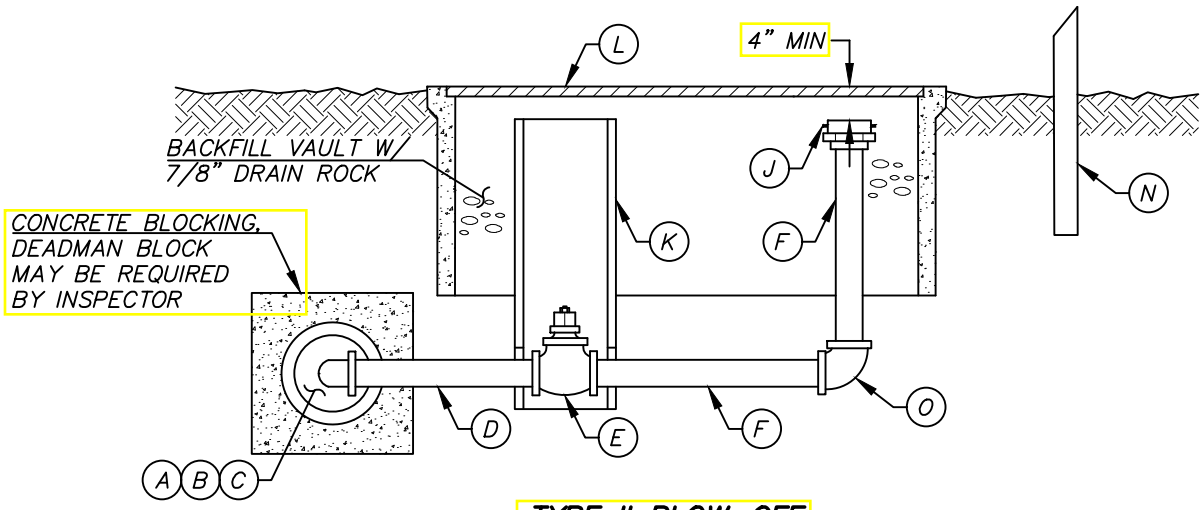

TYPE II BLOW-OFF

NOTE

1. ALL PIPE AND FITTINGS TO BE GALVANIZED EXCEPT WHERE NOTES AND ALL ASSEMBLED WITH TEFLON TAPE AND PIPE DOPE.

ITEM	TYPE I QTY	TYPE II QTY	DESCRIPTION
A	1	1	CAP W/ 2" IPS TAP
B	1	1	2" X 6" BRASS NIPPLE
C	1	1	2" 90° BRASS BEND
D	—	—	2" BRASS PIPE (LENGTH TO SUIT)
E	1	1	2" GATE VALVE W/SQUARE OPERATING NUT
			TYPE I REQUIRES CAST IRON VALVE BOX W/ DEEP SKIRT LID, TYPE II WITH 6" PVC PIPE ONLY
F	—	—	2" GALVANIZED IRON PIPE (LENGTH TO SUIT)
G	1	0	2" X 2" TEE
H	1	0	2" X 1/2" BUSHING
I	1	0	AUTOMATIC DRAIN VALVE – WEATHERMATIC 910
J	1	1	2" MIP X 2 1/2" NST FIRE HOSE ADAPTOR W/CAP
			TYPE 1 (MIP) , TYPE II (FIP) W/ 2" COUPLER
K	0	1	6" PVC (LENGTH TO SUIT)
L	0	1	FOGTITE TYPE 2 METER BOX W/ 3/8" SOLID STEEL TRAFFIC COVER (REINFORCED ON FOUR SIDES)
			AND H-20 LOADING MARKED "B.O."
M	—	—	FABRIC OR PLASTIC BARRIER
N	0	1	VALVE MARKER POST
O	1	1	2" 90° GALV. BEND

TYPE I AND II BLOW-OFF ASSEMBLY REV. 10/20/17

NOTES

1. FIRE HYDRANT BOLLARDS SHALL NOT BE INSTALLED WITHIN RIGHT-OF-WAY UNLESS OTHERWISE DIRECTED BY THE DISTRICT.
2. FIRE HYDRANT BOLLARDS SHALL BE INSTALLED WITHIN COMMERCIAL DEVELOPMENTS UNLESS OTHERWISE DIRECTED BY THE DISTRICT.
3. THE NUMBER OF BOLLARDS AND PLACEMENT OF BOLLARDS SHALL BE SUFFICIENT TO PROTECT THE FIRE HYDRANT FROM VEHICULAR TRAFFIC AND AS DIRECTED BY THE DISTRICT.
4. "BLUE DOT" (STIMSONITE RAISED PAVEMENT MARKER-#88AB) REQUIRED 6" OFF CENTERLINE (OR 4" OFF ANY OTHER MARKER" OF ROAD PERPENDICULAR TO FIRE HYDRANT.
5. FIRE HYDRANT AND BOLLARDS SHALL BE PAINTED WITH (2) COATS OF SAFETY YELLOW SEMI GLOSS.
6. DISTANCE FROM CENTER OF HYDRANT TO ISOLATION VALVE CAP SHALL BE SHOWN ON BONNET OF HYDRANT IN FEET (TO THE CLOSEST FOOT) USING COLE NUMBERS AND APPLIED WITH WATERPROOF LIQUID NAILS.

DEADMAN ASSEMBLY MAY BE REQUIRED ON RUNS OVER 20' OR CHANGE IN GRADE

OPTIONAL HYDRANT INSTALLATION MAY BE REQUIRED AS INSPECTOR DEEMS NECESSARY

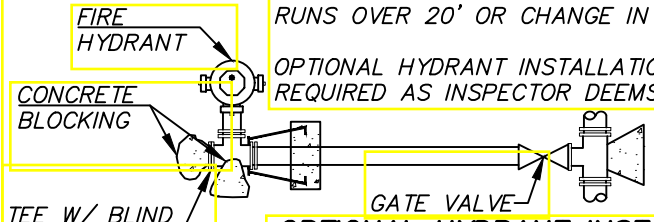

OPTIONAL HYDRANT INSTALLATION

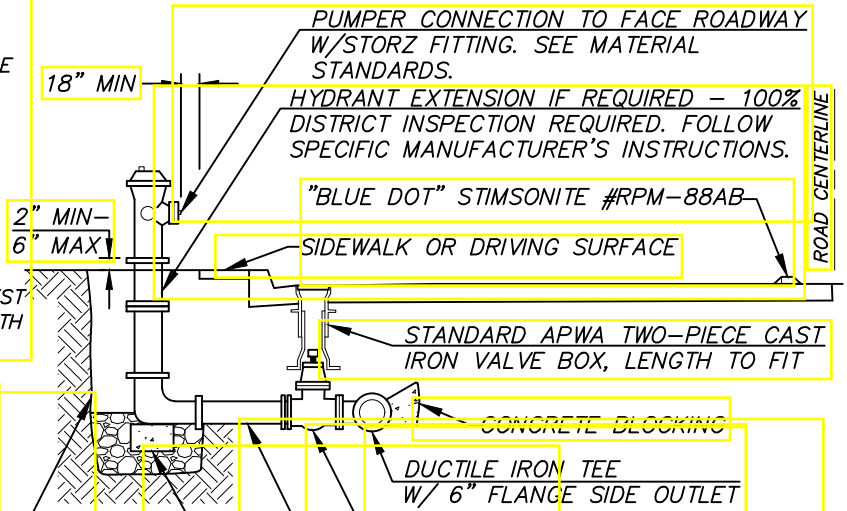

APPROVED FIRE HYDRANTS:
DRESSER M&H 129-S
MUELLER A423 (SUPER CENTURION 250)
CLOW MEDALLION
AMERICAN DARLING B-62-B
AVK SERIES 2780
U.S. PIPE SENTINEL 250

PLASTIC BARRIER REQUIRED BETWEEN HYDRANT AND WASHED ROCK 1 CU. YD. TO ABOVE WEEP HOLES OF HYDRANT MINIMUM 7/8" DRAIN ROCK.

FIRE HYDRANT ASSEMBLY

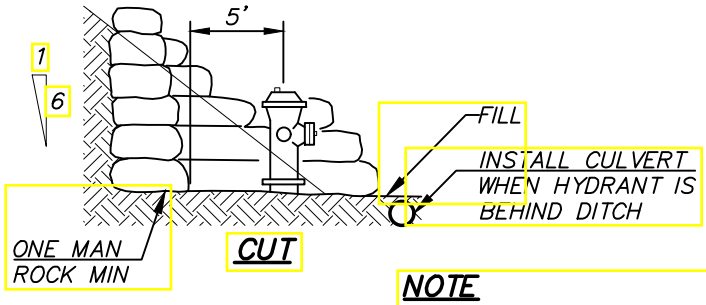

CUT

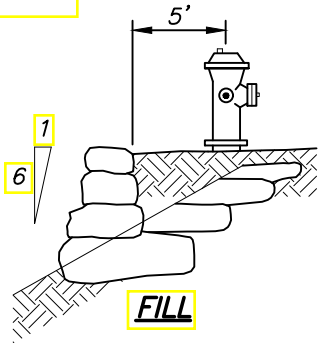

FILL

NOTE

1. 5' MIN CLEARANCE AROUND FIRE HYDRANT

FIRE HYDRANT LOCATION IN CUT OR FILL

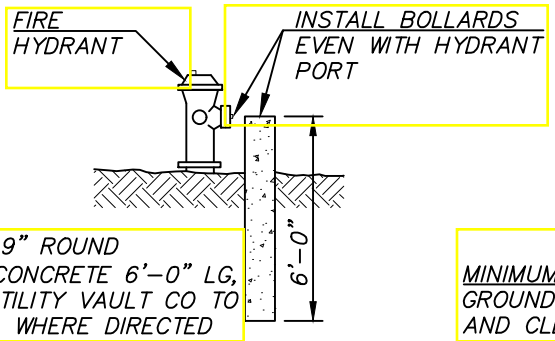

GUARD POST 9" ROUND REINFORCED CONCRETE 6'-0" LG, EQUAL TO UTILITY VAULT CO TO BE INSTALLED WHERE DIRECTED

ELEVATION

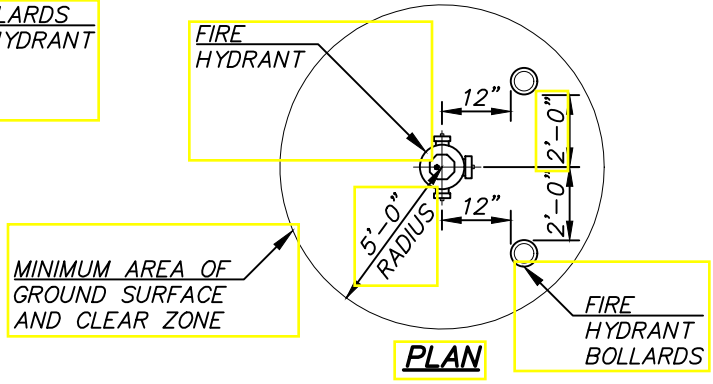

PLAN

FIRE HYDRANT BOLLARDS INSTALLATION

FIRE HYDRANT ASSEMBLY

REV. 11/6/17

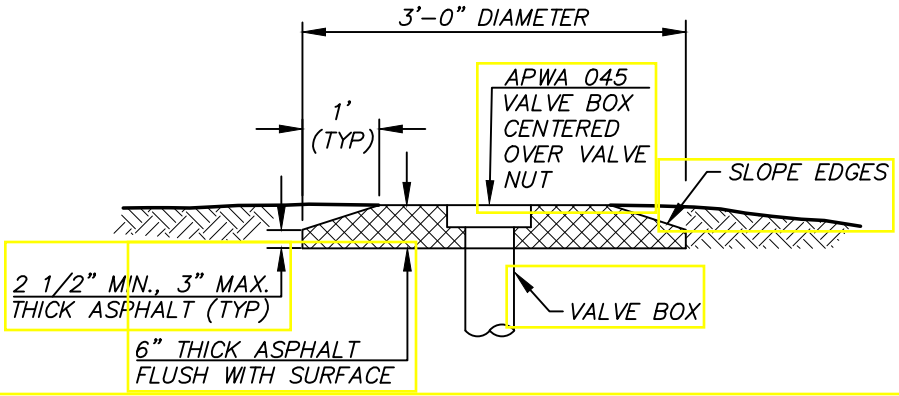

NOTES

1. THE COMPLETED PATCH SHALL BE FLUSH WITH THE SURROUNDING FINAL GRADE, SHALL NOT BE MORE THAN 1/8" FLUSH WITH THE SURROUND PAVEMENT, AND SHALL BE SMOOTH FOR TRAFFIC.
2. WHEN RAISING THE VALVE BOX TO FINISHED GRADE, EXCAVATE CASTING TO A DEPTH NECESSARY TO VERIFY CASTING OVERLAPS SOIL PIPE BY 3". ADD SOIL PIPE AS NEEDED. VALVE BOX SHALL BE CENTERED OVER THE VALVE NUT.
3. SLIP CANS ARE NOT ALLOWED WHEN RAISING VALVE BOXES TO GRADE.

REV. 10/20/17

VALVE BOX ASPHALT COLLAR DETAIL FOR NON-PAVED AREAS

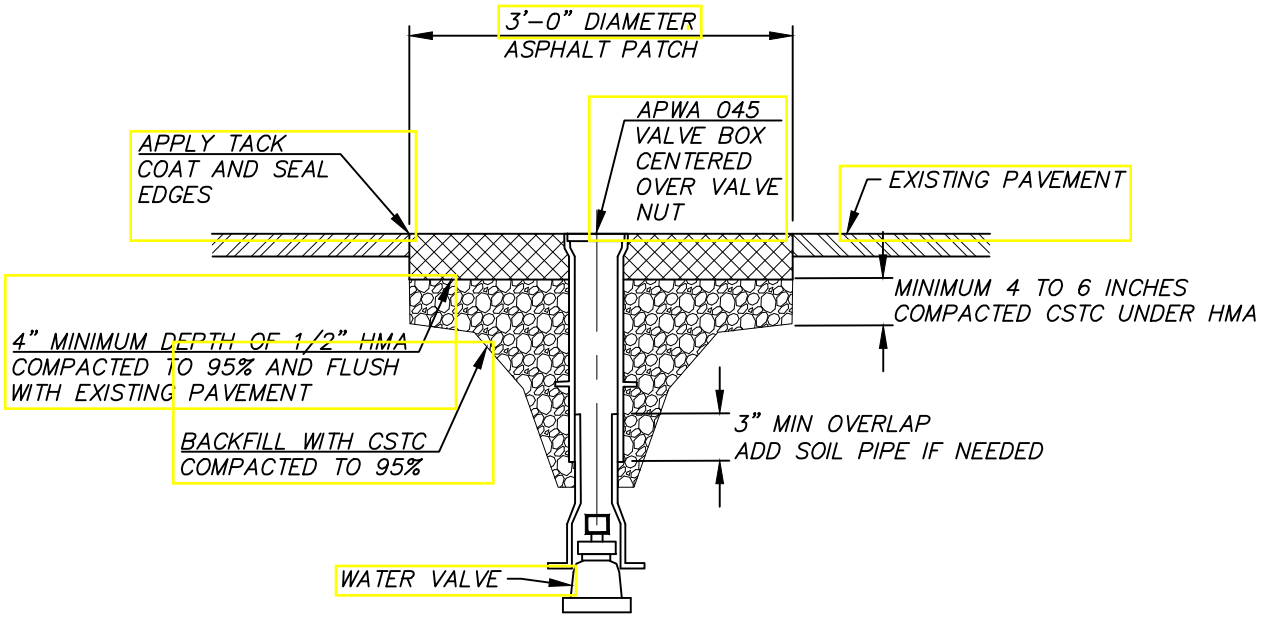

NOTES

1. VALVE CANS SHALL BE RAISED TO GRADE AFTER PLACEMENT OF THE ASPHALT'S FINAL LIFT AND WITHIN 48 HOURS UNLESS OTHERWISE APPROVED BY THE DISTRICT.
2. NEATLY REMOVE ASPHALT AROUND EXISTING VALVE CASTING.
3. EXCAVATE VALVE CASTING TO A DEPTH NECESSARY TO RAISE CASTING AND VERIFY CASTING OVERLAPS SOIL PIPE BY 3". ADD SOIL PIPE AS NEEDED. VALVE BOX SHALL BE CENTERED OVER THE VALVE NUT.
4. SLIP CANS ARE NOT ALLOWED.
5. BACKFILL WITH CSTC COMPACTED TO 95% (MODIFIED PROCTOR).
6. INSTALL 1/2" HMA IN 2–INCH LIFTS, TO A COMPACTED DEPTH EQUAL TO THE EXISTING PAVEMENT OR A MINIMUM OF 4", WHICHEVER IS GREATER. TACK ALL EDGES AND SEAL FINISH JOINTS WITH TAR AND SAND.
7. THE COMPLETED PATCH SHALL BE FLUSH WITH THE SURROUNDING PAVEMENT, SHALL NOT VARY FROM BEING FLUSH BY MORE THAN 1/8", AND SHALL BE SMOOTH FOR TRAFFIC.

REV. 10/20/17

VALVE BOX PAVEMENT PATCH DETAIL AND PAVED AREAS

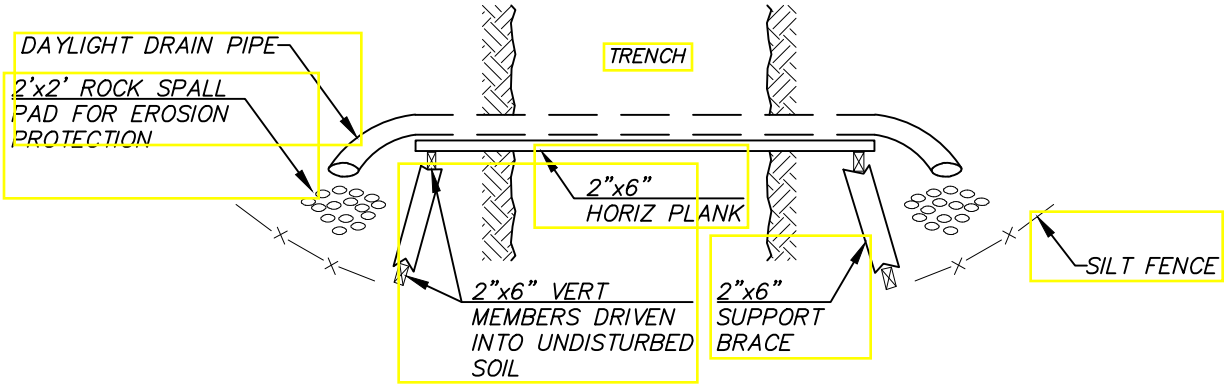

PLAN

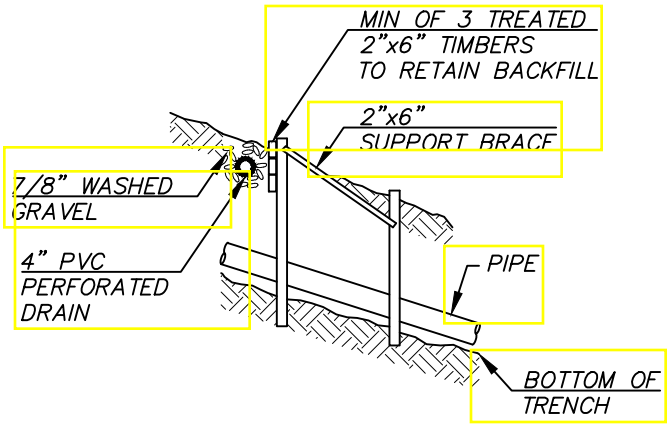

PROFILE

REV. 10/20/17

HILL HOLDER

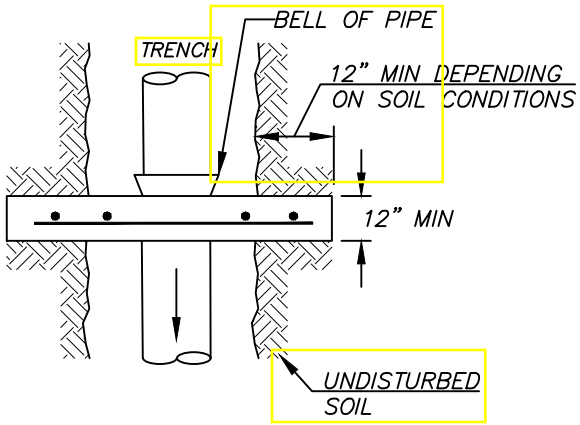

PLAN

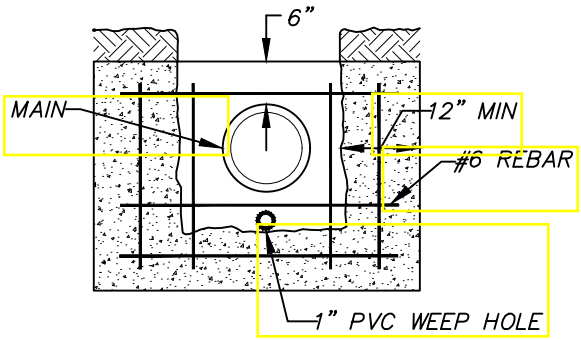

ELEVATION

PIPE ANCHOR

REV. 10/20/17

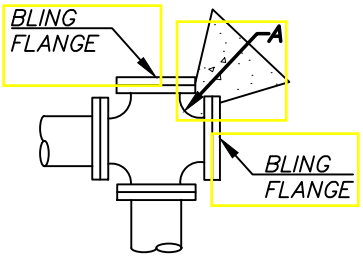

CAPPED CROSS

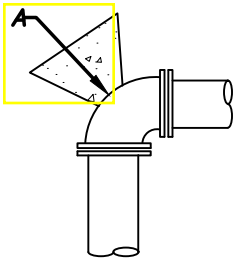

90° BEND

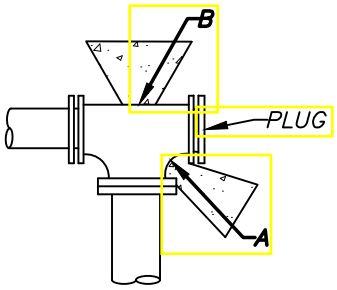

TEE

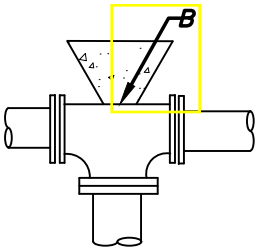

TEE

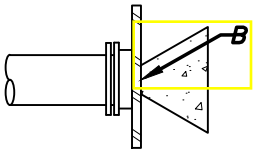

CAP

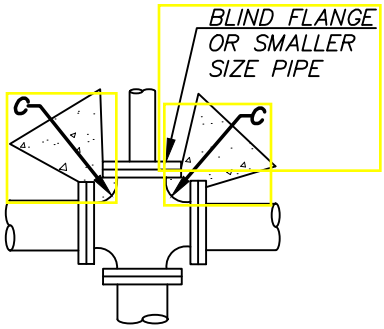

CROSS

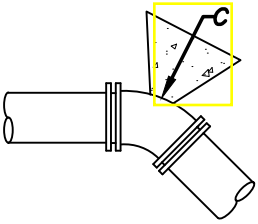

45° BEND

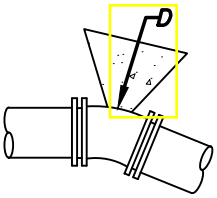

22 1/2° BEND

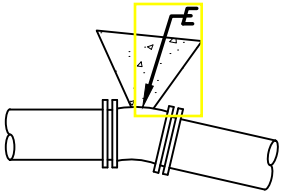

11 1/4° BEND

THRUST BLOCK TABLE
MIN BEARING AREA AGAINST UNDISTURBED SOIL (SF)

PIPE SIZE	A(FT^2)	B(FT^2)	C(FT^2)	D(FT^2)	E(FT^2)	X
4"	3	1	1	1	1	NONE
6"	4	4	2	1	1	NONE
8"	7	6	4	2	1	4
10"	11	10	6	3	2	6
12"	16	14	9	5	3	9
14"	22	19	12	6	3	12
16"	29	25	16	8	4	16
18"	36	31	20	10	5	20
20"	45	39	24	13	6	24
22"	54	47	29	15	8	29
24"	64	56	35	18	9	35
28"	87	76	48	24	12	48
30"	101	87	55	28	14	55
36"	145	125	78	40	20	78
42"	197	171	107	55	27	107
48"	257	223	140	71	36	140

NOTES

1. BEARING AREA OF CONCRETE THRUST-BLOCK BASED ON 200 PSI PRESSURE AND SAFE SOIL BEARING LOAD OF 2,000 POUNDS PER SQUARE FOOT.
2. AREAS MUST BE ADJUSTED FOR OTHER PIPE SIZES, PRESSURES AND SOIL CONDITIONS.
3. CONCRETE BLOCKING SHALL BE CAST-IN-PLACE AND HAVE A MINIMUM OF 1/4 SQUARE FOOT BEARING AGAINST THE FITTING.
4. BLOCK SHALL BEAR AGAINST FITTINGS ONLY AND SHALL BE CLEAR OF JOINTS TO PERMIT TAKING UP OR DISMANTLING OF JOINT.
5. CONTRACTOR SHALL INSTALL BLOCKING ADEQUATE TO WITHSTAND FULL TEST PRESSURE AS WELL AS TO CONTINUOUSLY WITHSTAND OPERATION PRESSURE UNDER ALL CONDITIONS OF SERVICE.

CONCRETE BLOCKING

REV. 10/20/17

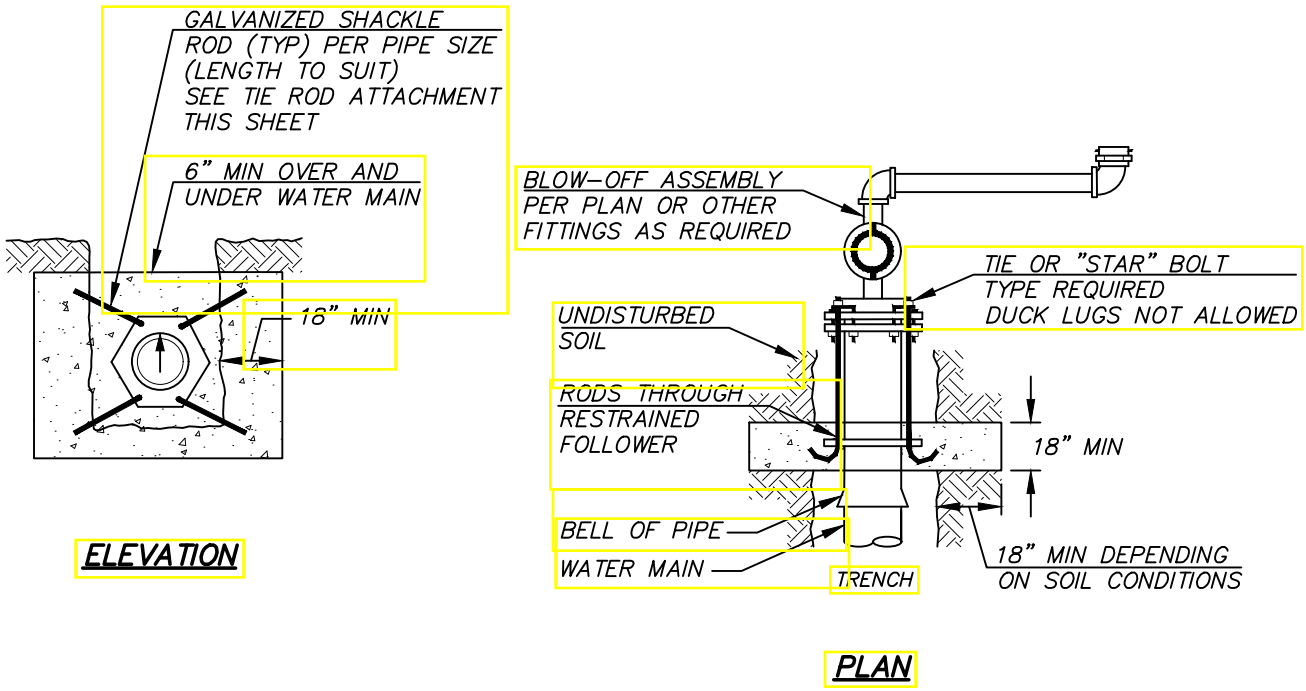

DEADMAN

REV. 10/18/17

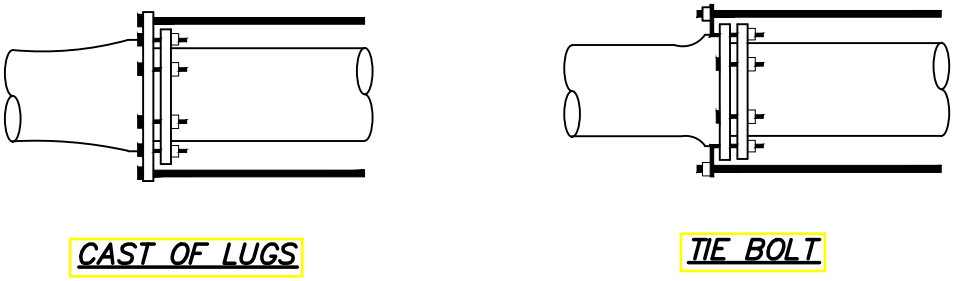

SIZE	PRESSURE PSI	FORCE IN POUNDS	NUMBER OF TIE RODS									
			2	3	4	6	8	10	12	14	16	24
3"	300	2,120	3/8"									
4"	300	3,780	3/8"									
6"	300	8,500	5/8"	1/2"		3/8"						
8"	300	15,100		3/4"	5/8"	1/2"						
10"	275	21,620			3/4"	5/8"	1/2"					
12"	250	33,930				3/4"	5/8"					
14"	250	46,200					3/4"					
16"	225	45,250					3/4"		5/8"			
18"	200	50,900					3/4"		5/8"			
20"	200	62,840						3/4"		5/8"		
24"	200	90,480								3/4"		
30"	200	141,370								1"	7/8"	
36"	200	203,580									1"	7/8"

TIE ROD ATTACHMENTS

REV. 10/18/17

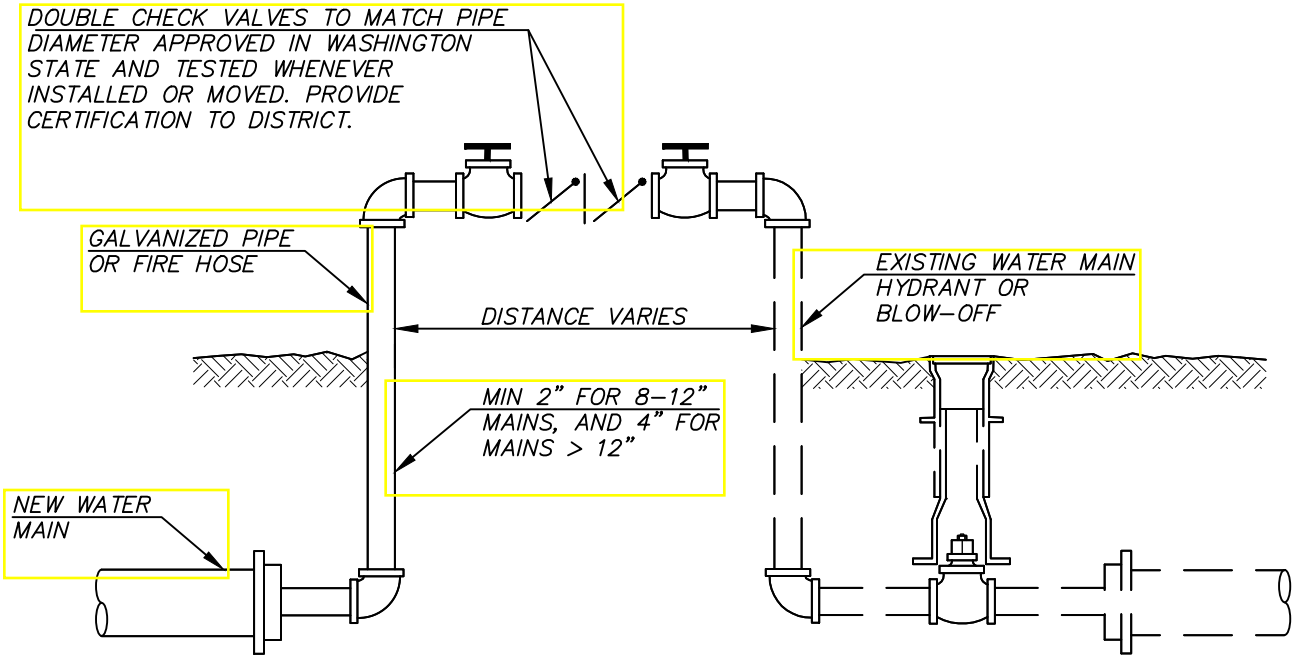

NOTES

1. FOR BELOW GROUND INSTALLATION, USE TYPE II BLOW-OFF ASSEMBLY, MODIFIED AS REQUIRED BY DISTRICT. INSTALL IN AREA NOT SUBJECT TO FLOODING.
2. ALL FILLING AND FLUSHING SHALL BE METERED BY DISTRICT. PROVIDE SPACE FOR INSTALLATION OF METER.
3. ALL NEW MAINS SHALL BE KEPT SEPARATE FROM THE DISTRICT'S EXISTING SYSTEM UNTIL THE NEW MAINS ARE TESTED AND ACCEPTED. FINAL CONNECTION REQUIRES 100% INSPECTION BY DISTRICT.
4. PROTECT ABOVE GROUND INSTALLATION FROM DAMAGE AND FREEZING.

TESTING CONNECTION

REV. 10/18/17

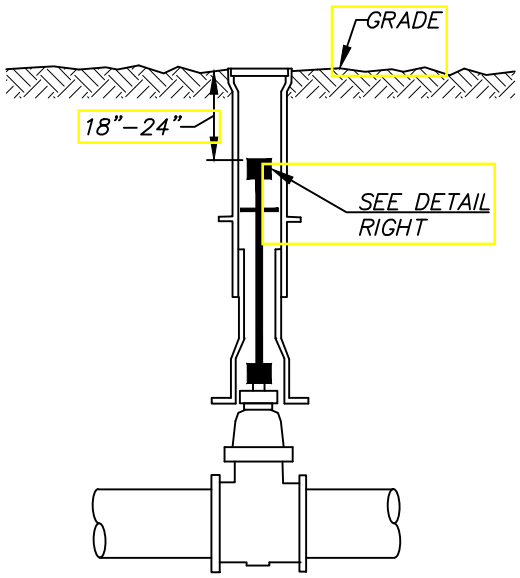

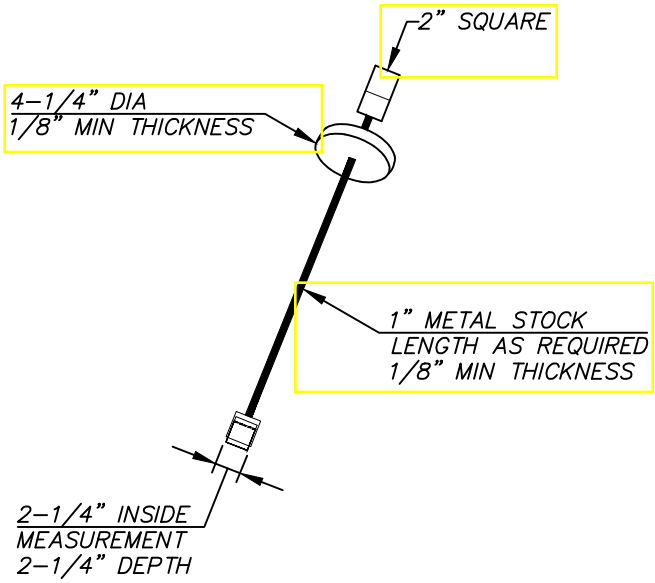

NOTE
EXTENSIONS ARE REQUIRED WHEN THE VALVE NUT IS MORE THAN 36" BELOW FINISHED GRADE. EXTENSIONS ARE TO BE A MINIMUM OF ONE (1) FOOT LONG. ONLY ONE EXTENSION TO BE USED PER VALVE. VALVE EXTENSION TO BE WITHIN 18" TO 24" OF FINISHED GRADE.

NOTE
ALL EXTENSIONS ARE TO BE MADE OF STEEL SIZED AS NOTED, AND PAINTED WITH TWO COATS OF CARBON ELASTIC (ATCO #222) AS SPECIFIED BY PRESERVATIVE PAINT CO. OR AN APPROVED EQUAL

VALVE OPERATING NUT EXTENSION

REV. 10/24/17

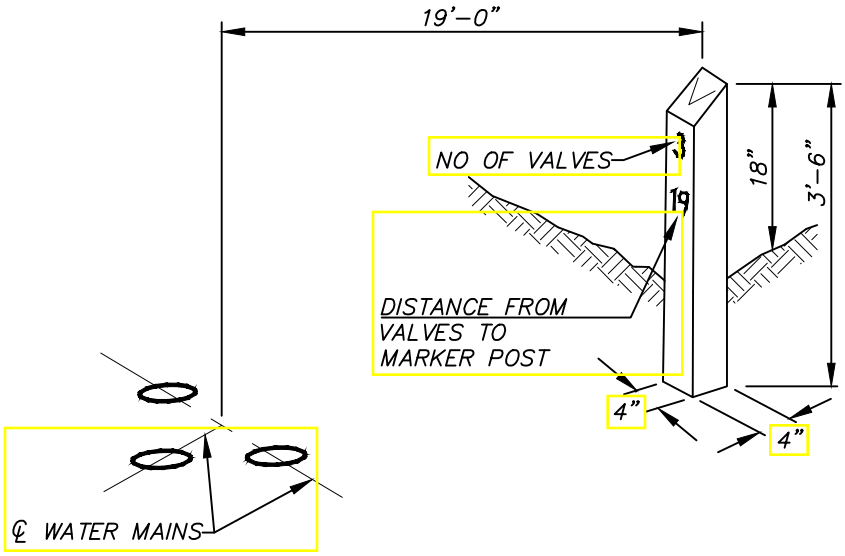

NOTES

1. VALVE MARKER POST SHALL BE A FOGTITE VALVE MARKER OR APPROVED EQUAL.
2. THE POST SHALL BE SET AT RIGHT ANGLES TO THE ROADWAY FROM THE VALVE AND SHALL BE SITUATED IN A SAFE AND REASONABLY CONSPICUOUS LOCATION.
3. FOR MORE THAN ONE VALVE, THE NUMBER OF VALVES SHALL BE NOTED NEAR THE TOP OF THE POST WITH THE DISTANCE TO THE CENTER OF THE VALVE (OR CLUSTER) MARKED BELOW.
4. PAINT VALVE MARKER WITH (2) COATS ALKYD INDUSTRIAL ENAMEL SAFETY YELLOW AND APPLY NUMBER OF VALVES AND DISTANCE (TO THE CLOSEST FOOT) TO THE LINE VALVE CAPS IN COLE NUMBERS APPLIED WITH WATERPROOF LIQUID NAILS.

VALVE MARKER POST

REV. 10/24/17

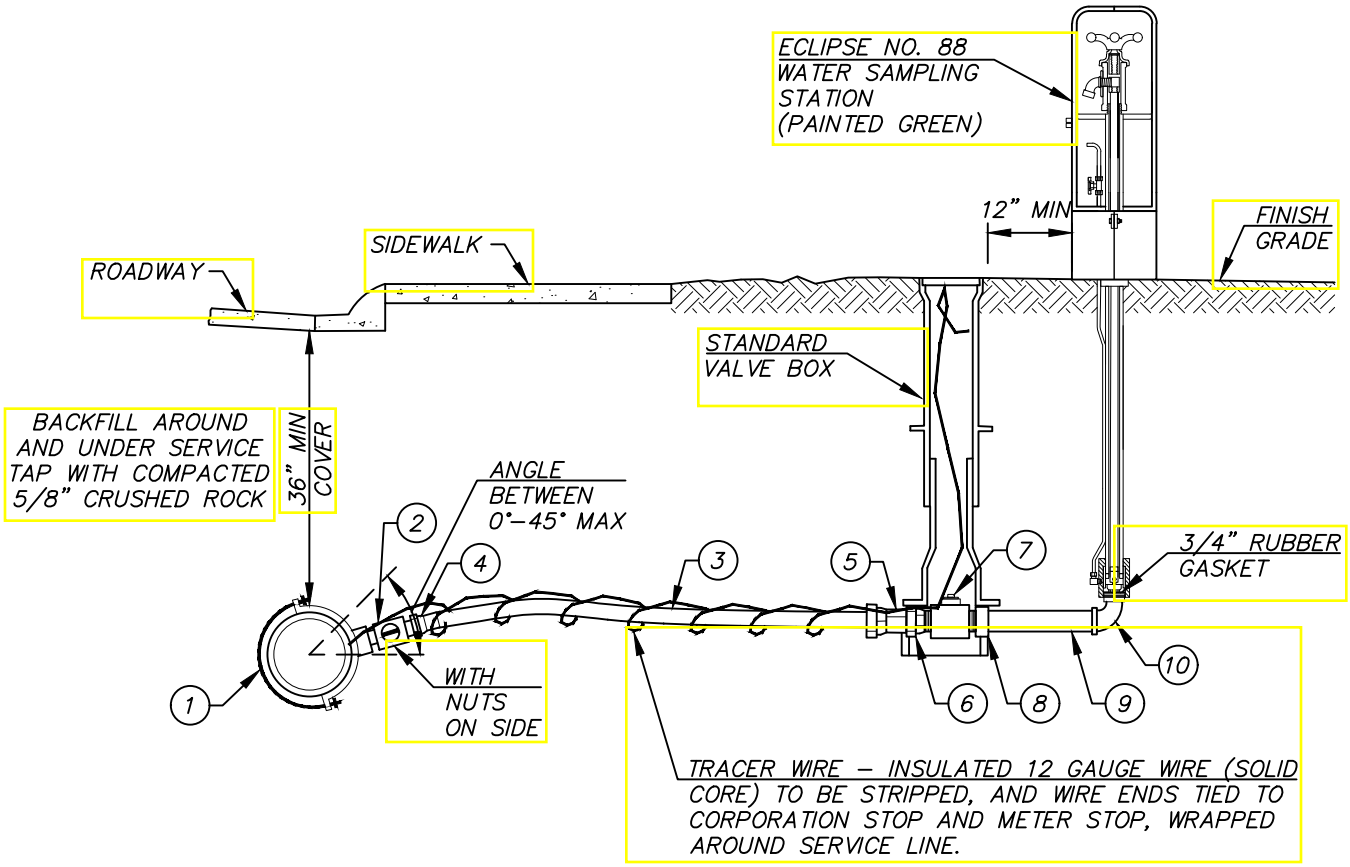

ITEM	DESCRIPTION	FORD PART NO	MUELLER PART NO	A.Y. MCDONALD	OTHER PART NO.	QTY
1	1" SADDLE I.P.T.	N/A	N/A	N/A	ROMAC 202S	1
2	1" CORPSTOP (MIPxMIP)	FB500–4	B2996	3131B1	N/A	1
3	1" HDPE PIPE	— DRISCOPLEX 5100 ULTRA LINE SDR7 200 PSI IPS OR PW EAGLE —				1
4	1" FIPxCOMPRESSION ADAPTOR	C16–44P *	H15454.10	4754–33	N/A	2
	W/ STAINLESS STEEL STIFFENER	INSERT–72	505142	6136	N/A	2
5	1" PAC JOINT x 1" MIP	C86–44	H15429	475–CP	N/A	1
6	1" FIP x 3/4 FIP REDUCER	C11–43	N/A	N/A	N/A	1
7	3/4" BALL CORP MIP x MIP	FB500–3	N/A	N/A	N/A	1
8	3/4" COUPLING	N/A	N/A	N/A	N/A	1
9	3/4" BRASS NIPPLE	N/A	N/A	N/A	N/A	1
10	3/4" 90° BRASS STREET ELL	N/A	N/A	N/A	N/A	1

* QUICK JOINT ACCEPTABLE, GRIP JOINT NOT ACCEPTABLE

NOTES

1. ALL PIPE AND FITTINGS TO BE ASSEMBLED WITH TEFLON TAPE AND PIPE DOPE UNLESS OTHERWISE NOTED.
2. SERVICE LINES SHALL BE INSTALLED PERPENDICULAR TO THE WATER MAIN.
3. THE SERVICE LINE SHALL BE INSTALLED TO ALLOW FOR THE FAR SIDE OF THE SAMPLE STATION TO BE INSTALLED IN THE R/O/W OR EASEMENT LINE, UNLESS OTHERWISE DIRECTED BY THE DISTRICT.

WATER SAMPLING STATION

REV. 10/30/17

SEWER DETAILS

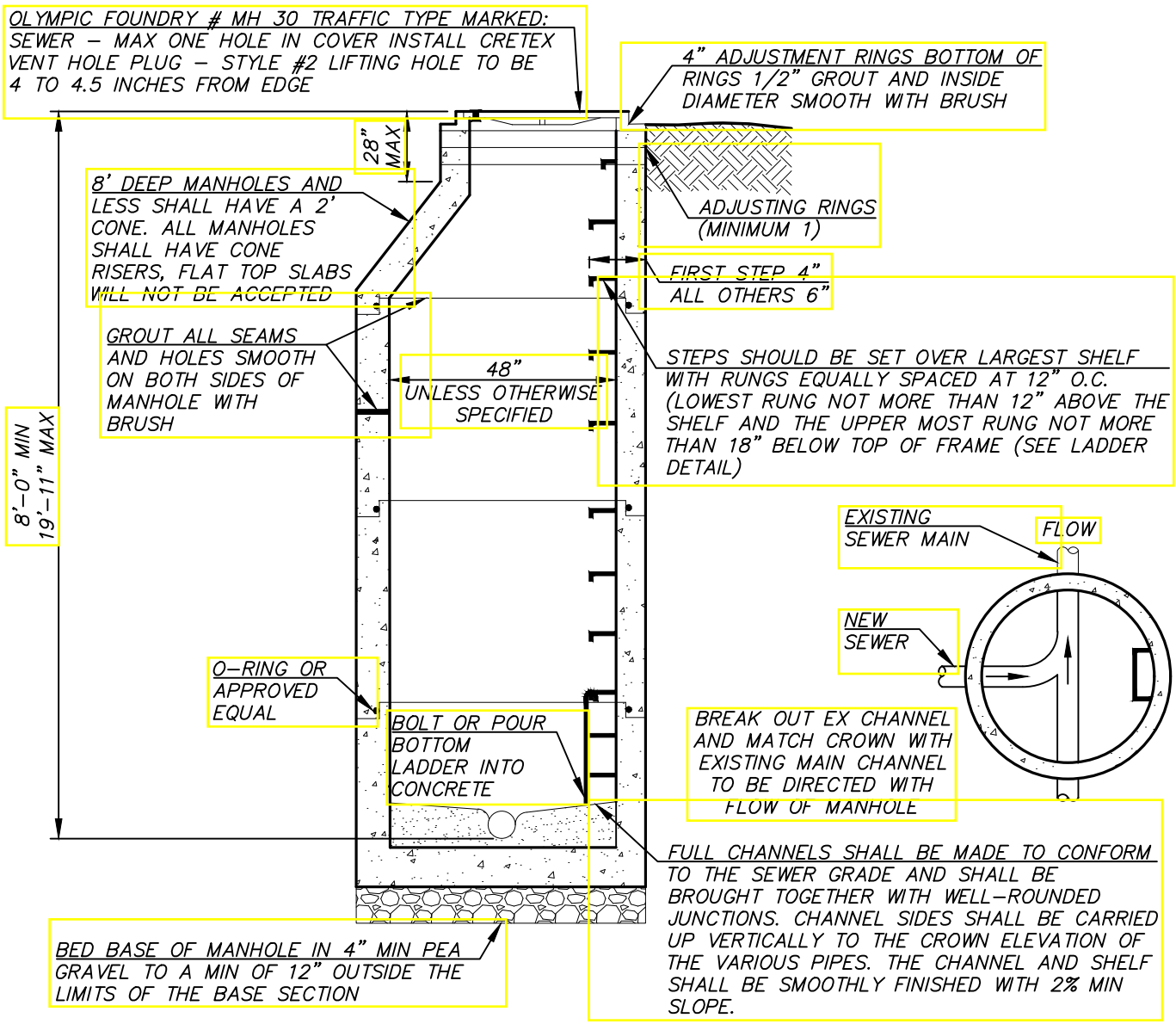

NOTES

1. BACKFILLING AND MECHANICAL COMPACTION SHALL BE PERFORMED CAREFULLY SO THAT NO DAMAGE IS IS DONE TO THE PIPE OR TO ITS ALIGNMENT. THE DISTRICT MAY DIRECT THE CONTRACTOR TO USE SPECIAL BACKFILL TECHNIQUES WHEN THE DISTRICT DEEMS IT NECESSARY. COMPACTION IS TO MEET KING COUNTY REQUIREMENTS.

2. MANHOLES SET IN PAVED STREETS OR OTHER PAVED AREAS SHALL BE SET TO FINISHED GRADE OF THE PAVING, AND WHEN REQUIRED THE MANHOLE FRAME SHALL BE TILTED TO CONFORM TO THE GRADE OF THE PAVED SURFACE. REMOVE ASPHALT FROM COVER AFTER PAVING.

3. ASPHALT PATCH WILL BE REQUIRED ON ALL MANHOLES INSTALLED ON THE SHOULDER OF THE ROADWAY. (SEE SANITARY MANHOLE ASPHALT PATCH DETAIL).

4. IF MANHOLE IS INSTALLED ON UNIMPROVED GROUND SET MANHOLE TOP 6" ABOVE GRADE WITH LOCKING COVER AND FRAME (OLYMPIC FOUNDRY #MH 30 D/T) AND ASPHALT PATCH (SEE MANHOLE ASPHALT ASPHALT COLLAR DETAIL).

5. BASE SECTION OPENINGS TO RECEIVE PIPE SHALL BE CIRCULAR CORE–DRILLED OR KNOCK–OUTS. KOR–N–SEAL CONNECTOR REQUIRED.

6. HORIZONTAL DISTANCE BETWEEN MANHOLES SCALED FROM WORKSHEETS AND ROADWAY PLAN AND PROFILES. ACTUAL DISTANCES TO THE COMPUTED AT TIME OF STAKING.

7. MANHOLES BETWEEN 6–FEET AND 8–FEET DEEP REQUIRE WRITTEN DISTRICT APPROVAL. MANHOLES LESS THAN 6 FEET DEEP ARE NOT ALLOWED.

8. MANHOLES 20' AND GREATER IN DEPTH SHALL BE 60" DIAMETER. FOR PIPE 15" OR GREATER DIAMETER, MANHOLES SHALL BE 72" DIAMETER.

STANDARD SANITARY MANHOLE REV. 10/19/17

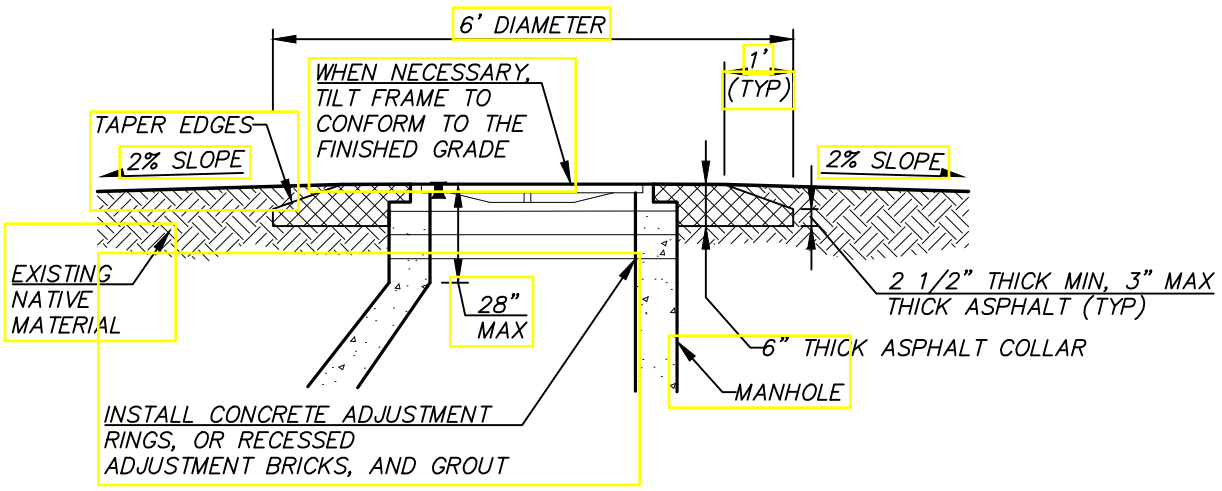

MANHOLE ASPHALT COLLAR FOR NON-PAVED AREAS

REV. 10/19/17

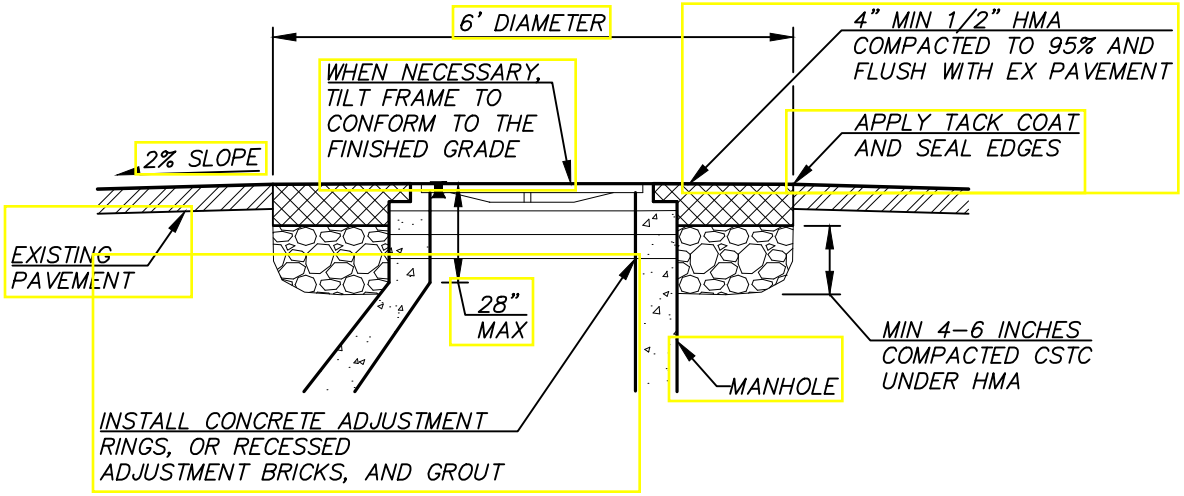

MANHOLE PAVEMENT PATCH FOR PAVED AREAS

REV. 10/19/17

NOTES

1. CONTRACTOR SHALL WARRANTY MANHOLE ADJUSTMENT AREA FREE FROM LEAKS FOR ONE YEAR.
2. IN PAVED AREAS, MANHOLE FRAMES SHALL BE RAISED TO GRADE AFTER PLACEMENT OF THE ASPHALT'S FINAL LIFT AND WITHIN 48 HOURS UNLESS OTHERWISE APPROVED BY THE DISTRICT.
3. IN PAVED AREAS, NEATLY REMOVE ASPHALT AROUND EXISTING MANHOLE FRAME.
4. INSTALL CHANNEL BOARD IN MANHOLE PRIOR TO ANY WORK, AND REMOVE AFTER FINAL ADJUSTMENT.
5. PRIOR TO ADJUSTMENT, NOTIFY DISTRICT IF THE FINAL MANHOLE NECK WILL EXCEED 28".
6. IN PAVED AREAS, EXCAVATE AROUND EXISTING MANHOLE FRAME TO A MIN. DEPTH OF 12".
7. REMOVE FRAME AND COVER, AND INSTALL ADJUSTMENT RINGS, TILTING FRAME AS NECESSARY TO MATCH EXISTING GRADE. ADJUSTMENT BRICKS RECESSED FOR GROUTING, CAN BE UTILIZED. REINSTALL FRAME AND COVER.
8. IN PAVED AREAS BACKFILL WITH CRUSHED SURFACING TOP COURSE (CSTC) COMPACTED TO 95% (MODIFIED PROCTOR).
9. IN NON-PAVED AREAS, BACKFILL WITH APPROVED BACKFILL MATERIAL COMPACTED TO 95%.
10. IN PAVED AREAS, INSTALL 1/2" HMA IN 2-INCH LIFTS, TO A COMPACTED DEPTH EQUAL TO THE EXISTING PAVEMENT OR A MINIMUM OF 4", WHICHEVER IS GREATER. TACK ALL EDGES AND SEAL FINISH JOINTS WITH TAR AND SAND.
11. IN UN-PAVED AREAS, INSTALL ASPHALT PATCH TO A MINIMUM COMPACTED DEPTH OF 6" AS SHOWN ABOVE.
12. GROUT MANHOLE NECK. "JETSET" NOT ALLOWED. DO NOT RUN GROUT ONTO MANHOLE FRAME.

REV. 10/19/17

GENERAL NOTES FOR ASPHALT COLLAR/PATCHES AROUND MANHOLES

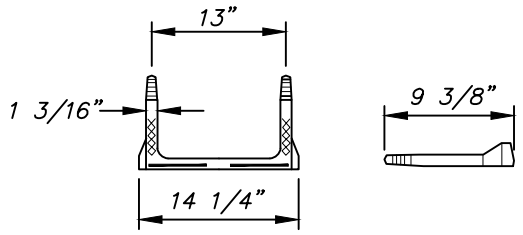

SAFETY STEP
(LANE INTERNATIONAL OR APPROVED EQUAL)

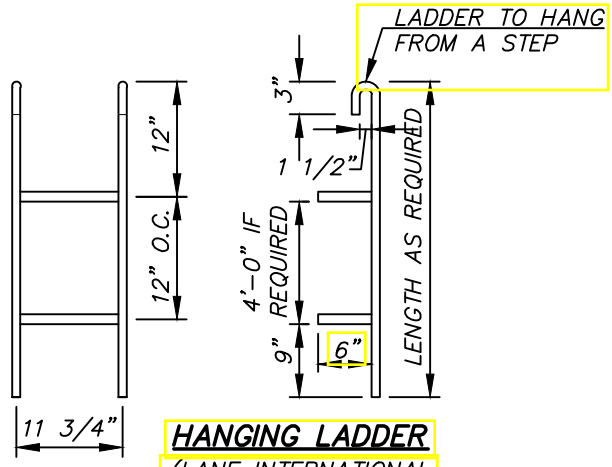

HANGING LADDER
(LANE INTERNATIONAL OR APPROVED EQUAL)

NOTES

1. POLYPROPYLENE PLASTIC STEPS SHALL BE A POLYPROPYLENE PLASTIC STEP INJECTION MOLDED AROUND A 1/2 INCH DIAMETER ASTM A-615, GRADE 60, STEEL REINFORCING BAR. INSTALLATION AS PER THE MANUFACTURER'S SPECIFICATIONS.
2. POLYPROPYLENE PLASTIC LADDER SHALL HAVE A POLYPROPYLENE PLASTIC STEP INJECTION MOLDED AROUND A 1/2 INCH DIAMETER ASTM A-615, GRADE 60, STEEL REINFORCING BAR, AND A POLYPROPYLENE PLASTIC RAIL INJECTION MOLDED AROUND A 9/16 INCH DIAMETER ASTM C-1018, COLD DRAWN BAR. INSTALLATION AS PER THE MANUFACTURER'S SPECIFICATION.

MANHOLE STEP AND LADDER

REV. 10/19/17

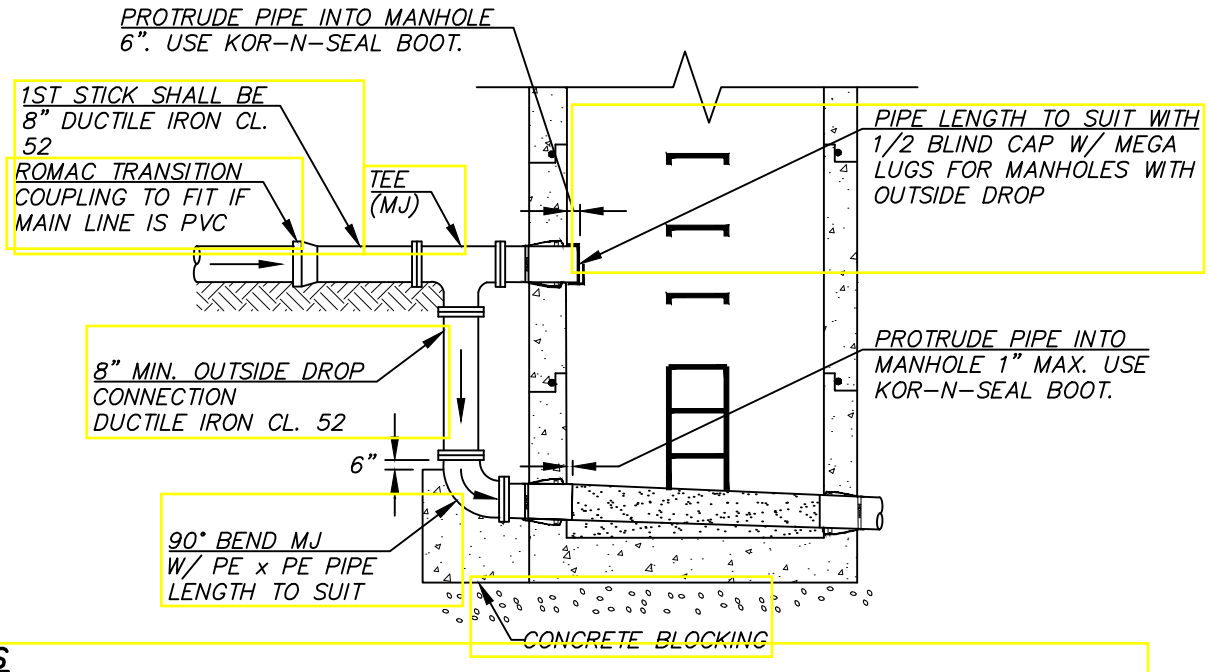

NOTES

1. ALL DUCTILE IRON PIPE AND FITTINGS SHALL BE PROTECTO 401 LINED.
2. DROP MANHOLE SHALL MEET ALL REQUIREMENTS AS STATED IN THE STANDARD MANHOLE DETAIL, MATERIALS AND CONSTRUCTION NOTES.
3. DROP MANHOLES SHALL ONLY BE USED IN STRAIGHT FLOW-THROUGH LOCATIONS (NO 90° TURNS).
4. ALL DUCTILE IRON FITTINGS WITH MEGA-LUGS.
5. VERTICAL BEND MAY BE REQUIRED DUE TO PIPE SLOPE CONDITIONS AT DUCTILE IRON TEE.

DROP MANHOLE

REV. 10/19/17

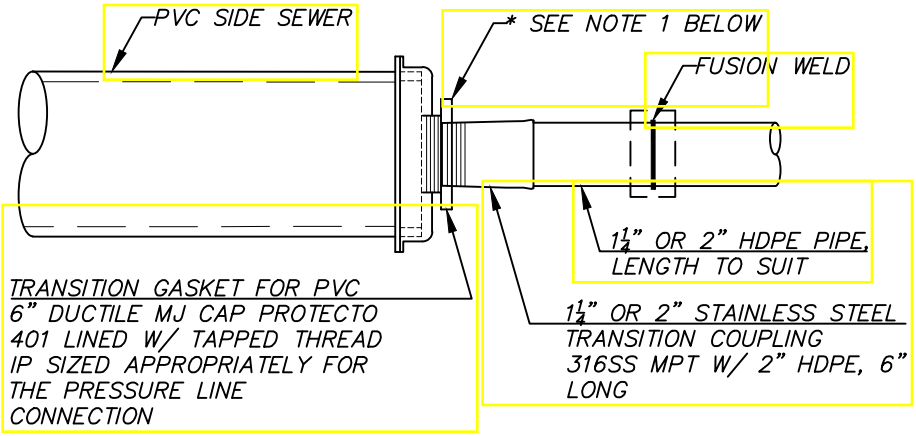

NOTES

1. FOR 1–1/4" SERVICE USE 2"x1–1/4" BRASS BUSHING.
2. FOR 2" SERVICE, OMIT BUSHING.

PRESSURE LINE CONNECTION

REV. 10/19/17

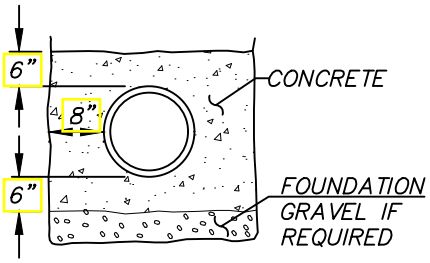

CONCRETE ENCASEMENT FOR SANITARY SEWERS

REV. 10/19/17

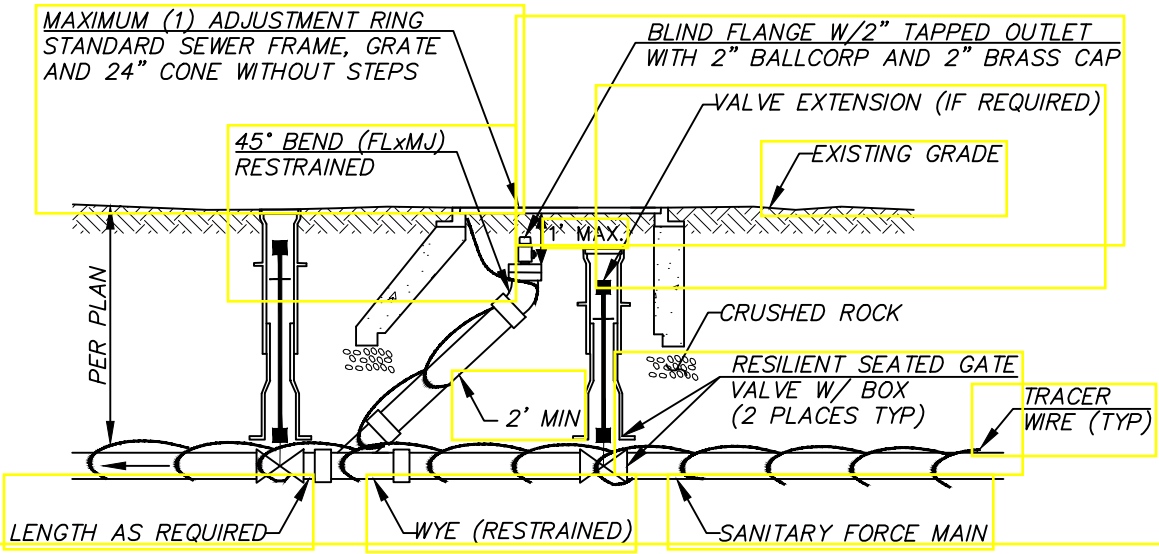

NOTES

1. VALVES, VALVE BOXES AND VALVE EXTENSIONS SHALL MEET THE SAME REQUIREMENTS AS SHOWN IN THE STANDARD WATER DETAILS. VALVE BOX COVERS SHALL OLYMPIC FOUNDRY 940 OR EQUAL MARKED "SEWER".
2. VALVE MARKER POSTS SHALL MEET THE SAME REQUIREMENTS AS SHOWN IN THE WATER DETAILS AND BE PAINTED AS SPECIFIED IN THE STANDARD CONSTRUCTION NOTES.
3. ALL D.I. PIPE AND FITTINGS SHALL BE PROTECTOR 401 EPOXY COATED. ALL PIPE AND FITTINGS SHALL BE RESTRAINED JOINT.

SANITARY FORCE MAIN CLEANOUT TYPE II

REV. 10/19/17

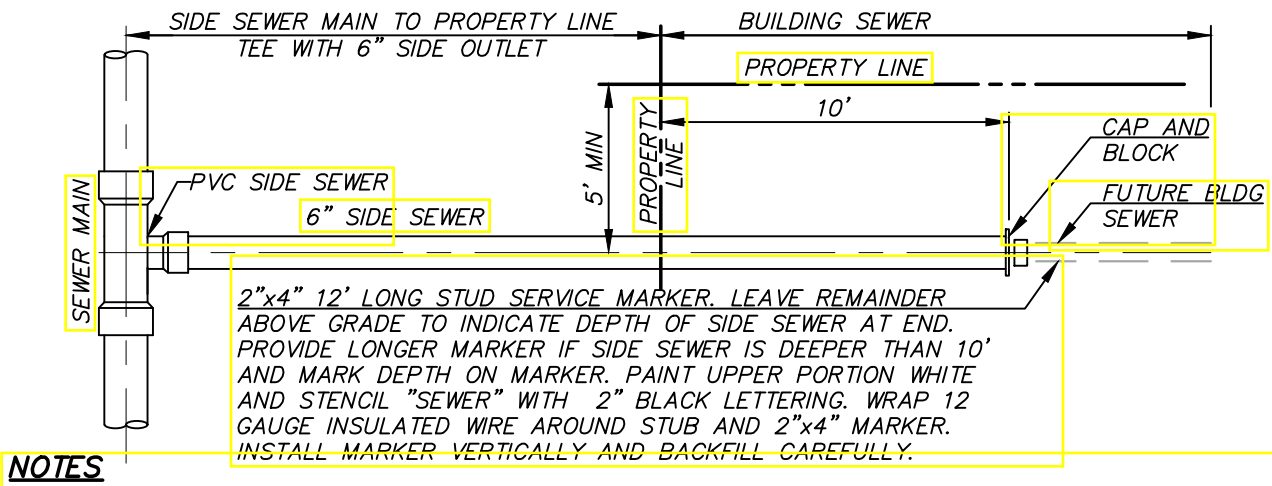

NOTES

1. MAXIMUM DEPTH OF SIDE SEWER AT END IS 10' UNLESS ADDITIONAL DEPTH IS NEEDED TO PROVIDE GRAVITY SEWER SERVICE.
2. FOR MULTI-FAMILY AND/OR COMMERCIAL PROJECTS, SIDE SEWERS MAY BE EXTENDED, AT THE DISTRICT'S DISCRETION, FROM THE EDGE OF THE ROAD OR PROPERTY LINE TO WITHIN 3 FEET OF THE BUILDING FOUNDATION.

SINGLE SIDE SEWER

REV. 10/19/17

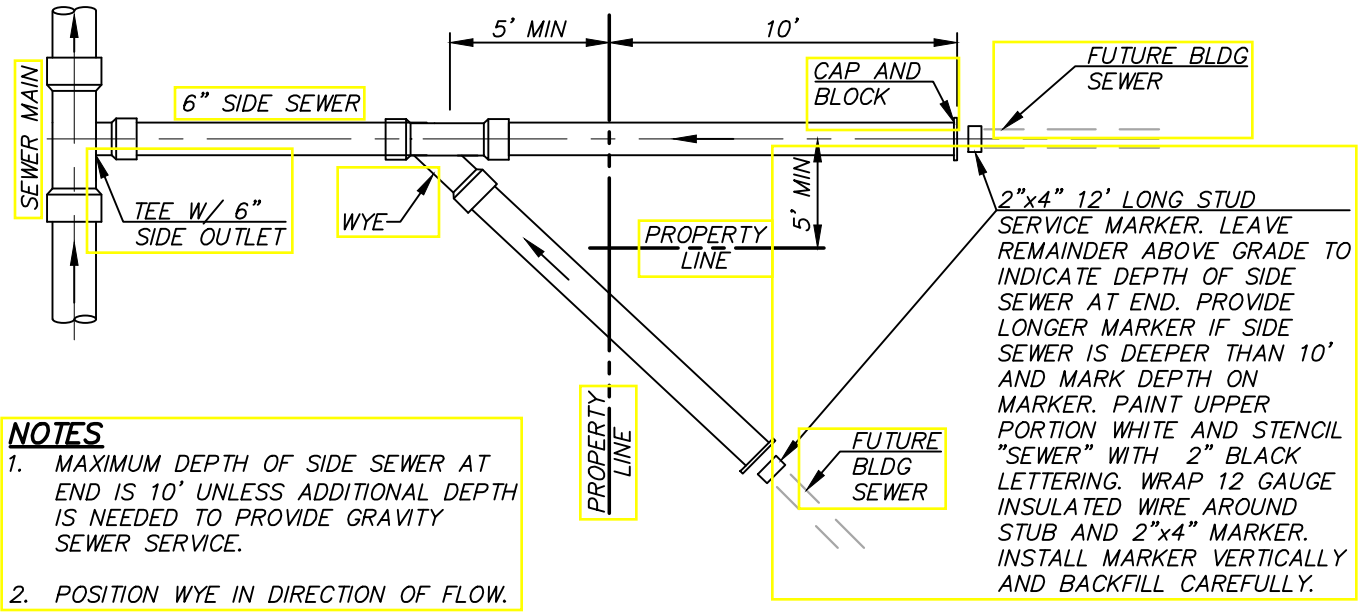

NOTES

1. MAXIMUM DEPTH OF SIDE SEWER AT END IS 10' UNLESS ADDITIONAL DEPTH IS NEEDED TO PROVIDE GRAVITY SEWER SERVICE.
2. POSITION WYE IN DIRECTION OF FLOW.

DOUBLE SIDE SEWER

REV. 10/19/17

NOTES

1. CONNECTION OF NEW SIDE SEWER TO EXISTING MAIN MAY USE EITHER:

   - CUT IN TEE W/ PVC SLIP COUPLINGS.
   - ROMAC SST STAINLESS STEEL TAPPING SLEEVE W/ FL X MJ ADAPTER AND GASKET SIZED FOR D3034 PVC SIDE SEWER. ROMAC SIDE SEWER SADDLE, MODEL CB, IS NOT ALLOWED.

2. UNLESS OTHERWISE SHOWN ON PLAN, MINIMUM COVER FOR SIDE SEWERS (WHICHEVER IS LOWER):
   - 18" - PRIVATE PROPERTY
   - 3' - AT PROPERTY LINE
   - 2'-6" IF CROSSING A DITCH IN PUBLIC RIGHT OF WAY LOWER THAN THE LOWEST HOUSE ELEVATION

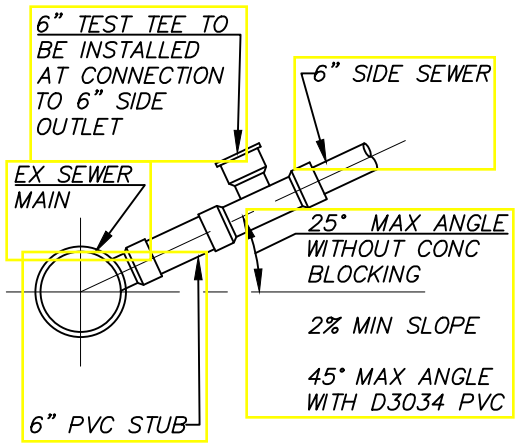

SIDE SEWER DETAILS

REV. 10/19/17

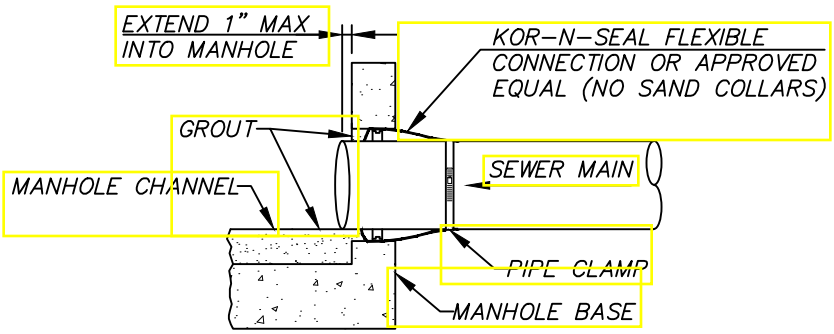

SANITARY MANHOLE INLET CONNECTION

REV. 10/19/17

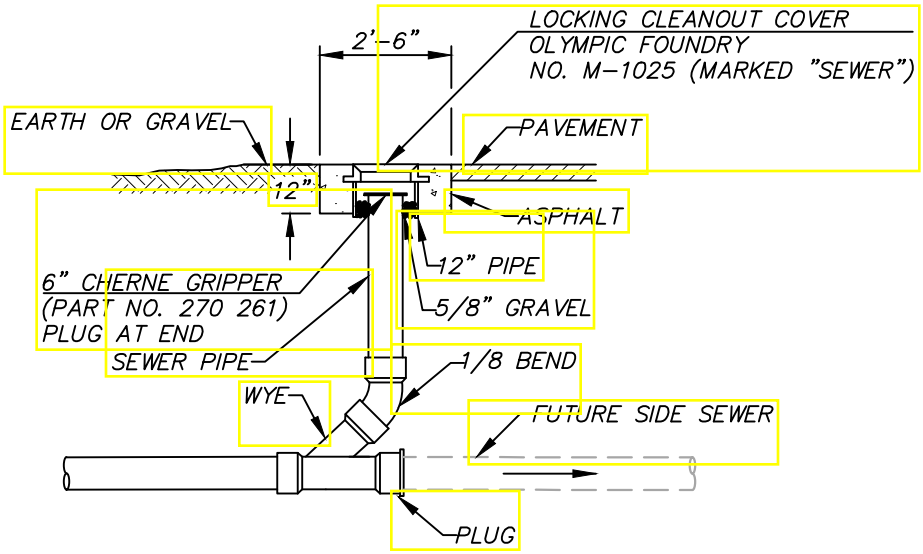

SIDE SEWER CLEANOUT

REV. 10/19/17

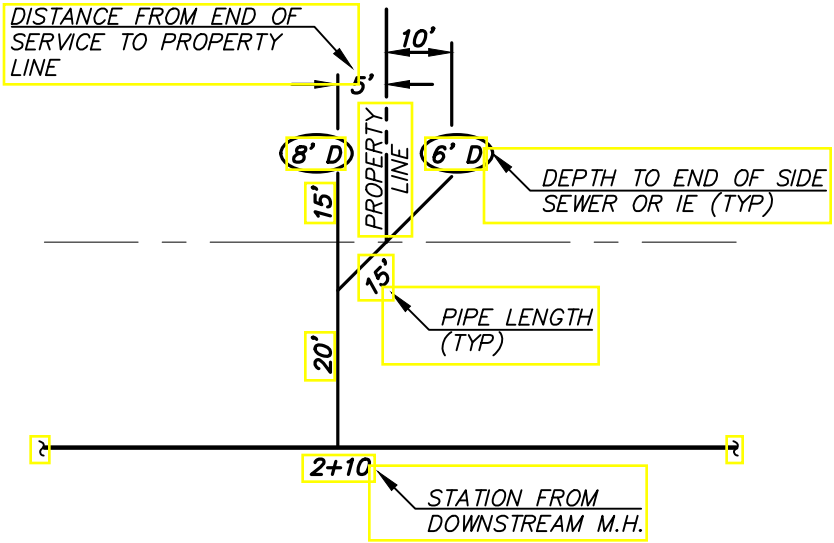

SIDE SEWER AS-BUILT

REV. 10/19/17

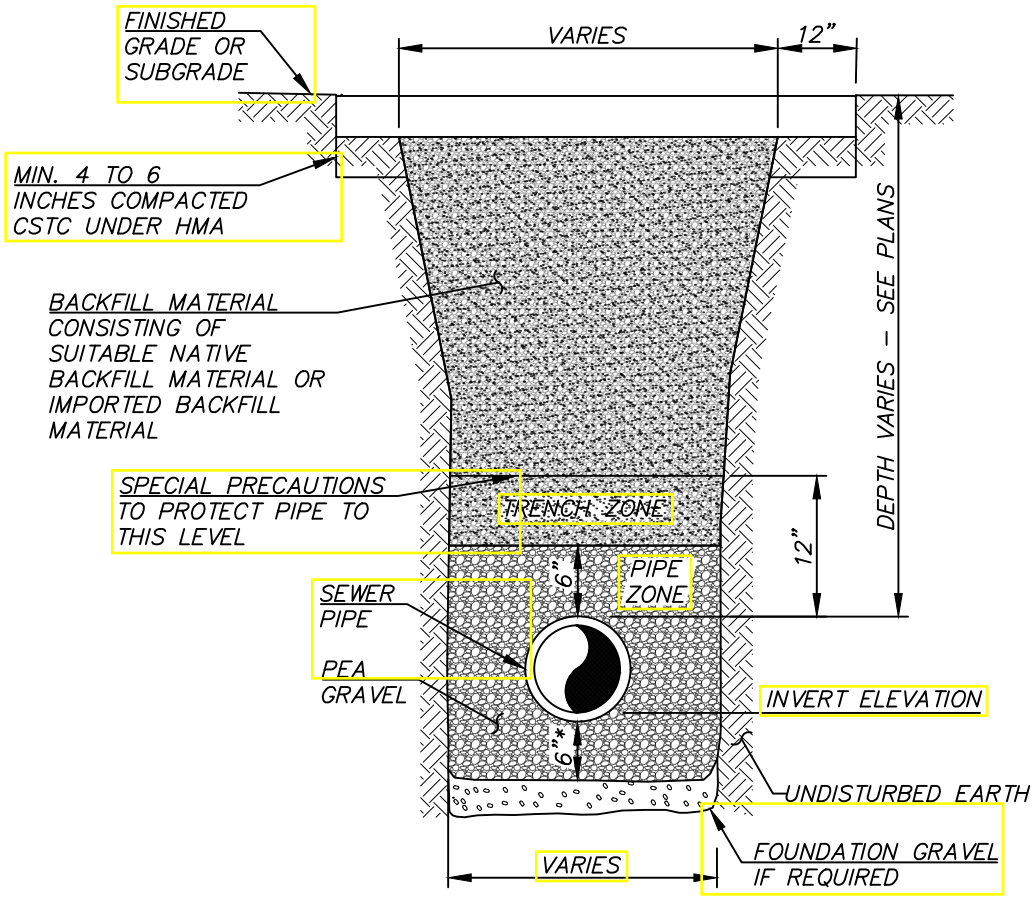

NOTES

1. * FOR PIPE DEEPER THAN 18', PIPE BEDDING SHALL EXTEND 18" ABOVE CROWN OF PIPE
2. NOT TO SCALE

SANITARY SEWER TRENCH SECTION

REV. 10/30/17

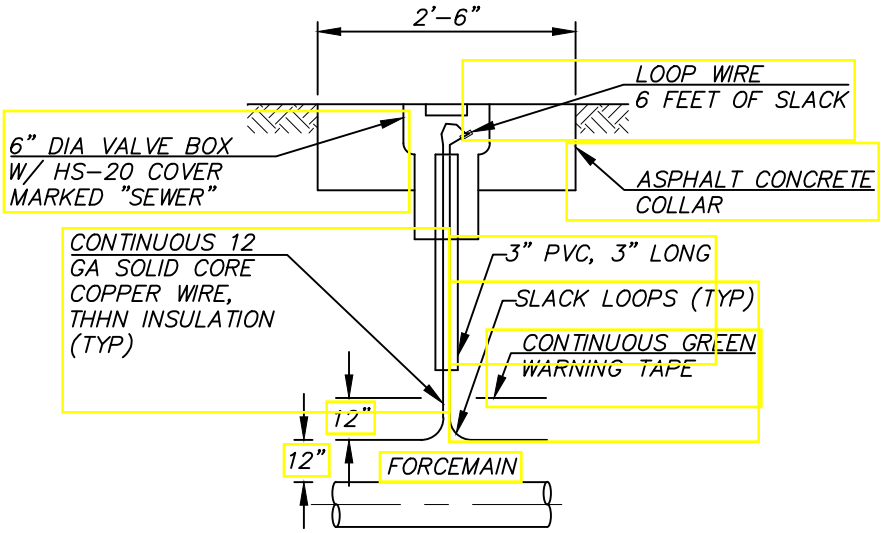

NOTES

1. LOCATE TEST BOX OVER CENTERLINE OF FORCEMAIN.
2. PROVIDE TEST BOX AT 500' INTERVALS AND AT BENDS.
3. PROVIDE 12" WIRE LOOP INSIDE VALVE BOX (TYP).
4. INLINE CONNECTORS ON WIRE ARE NOT ALLOWED.

FORCEMAIN TRACER WIRE LOCATE STATION

REV. 10/19/17

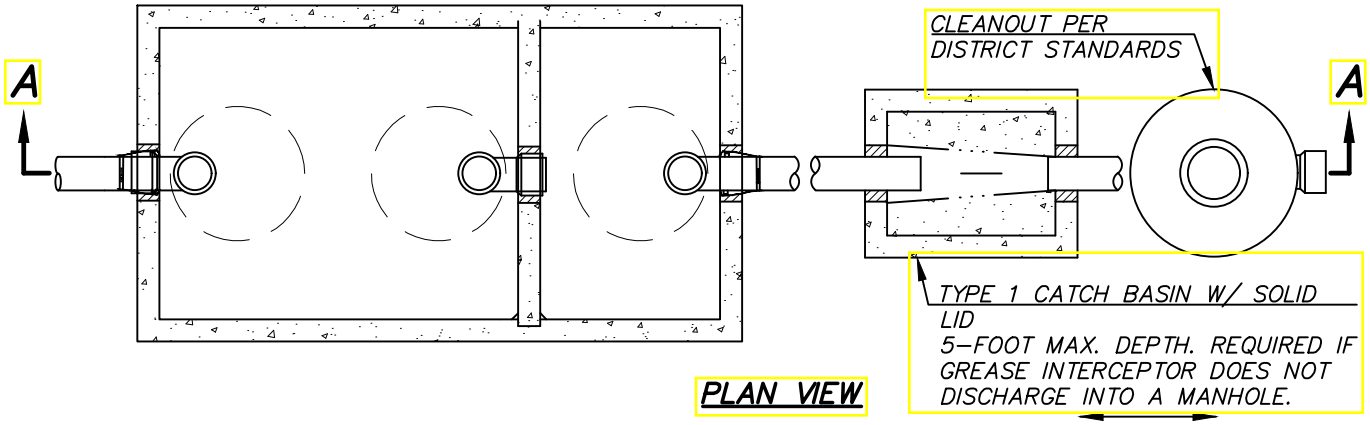

PLAN VIEW

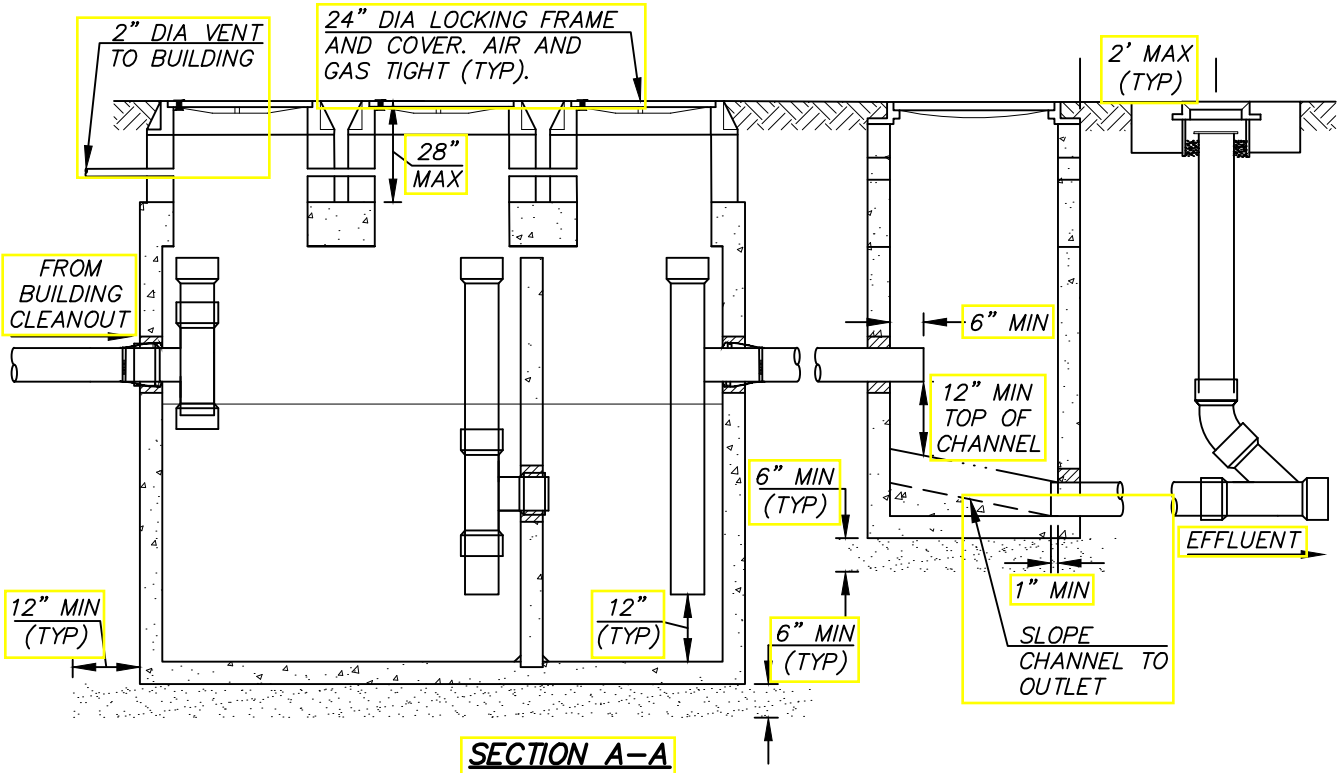

SECTION A-A

NOT TO SCALE

CONSTRUCTION NOTES

1. VAULT SHALL BE UTILITY VAULT GREASE INTERCEPTOR (1000 GALLON MINIMUM). VAULT SIZING CALCULATIONS SHALL BE SUBMITTED FOR REVIEW AND APPROVAL TO THE DISTRICT PRIOR TO APPROVAL OF CONSTRUCTION. LOCATED 50-FT MAX. FROM POINT OF ENTRY.
2. THE EXTERIOR OF VAULTS BELOW GRADE SHALL BE PAINTED WITH TWO (2) COATS OF BLACK BITUMASTIC SOLUTION. NO MOISTURE SHALL BE PRESENT DURING APPLICATION OF COATINGS.
3. NO MORE THAN 1-FOOT OF RISER RINGS FROM FINISHED GRADE. ADDITIONAL SECTIONS SHALL BE PROVIDED AS NECESSARY.
4. CLEAN OUTS PROVIDED 2-FOOT MAXIMUM AWAY FROM TYPE 1 CATCH BASIN.
5. MINIMUM OF 6-INCHES OF PEA GRAVEL BELOW STRUCTURES. EXTEND 12-INCHES BEYOND EDGES OF STRUCTURES.
6. ALL PIPING SHOWN IS 6" ø PVC PER DISTRICT STANDARDS.

INSPECTION REQUIREMENTS

1. CONSTRUCTION WILL BE INSPECTED IN ACCORDANCE WITH THE DISTRICT'S SIDE SEWER STANDARDS. DOUBLE INSPECTION SHALL BE REQUIRED.
2. LEAK TESTING: VAULT MUST BE FILLED WITH WATER TO TEST FOR LEAKS. VAULT AND TYPE 1 CATCH BASIN MUST HOLD WATER FOR 10-MINUTES.
3. ALL PIPING PENETRATIONS MUST BE INSPECTED. ALL PENETRATIONS MUST BE PROVIDED WITH A KOR-N-SEAL ADAPTER. UNLESS OTHERWISE DIRECTED BY THE DISTRICT.
4. TRENCHES SHALL BE LEFT OPEN SO ALL STRUCTURES, PIPING, AND BEDDING CAN BE INSPECTED AND THE SIDE SEWER AS-BUILT DRAWING PROVIDED BY THE CONTRACTOR CAN BE CONFIRMED BY THE INSPECTOR.
5. INSPECTION IS REQUIRED AT THE EXISTING SIDE SEWER STUB OF WHERE THE FINAL CONNECTION WILL OCCUR.

REV. 10/19/17

STANDARD GREASE INTERCEPTOR (1,000 GALLON MIN)

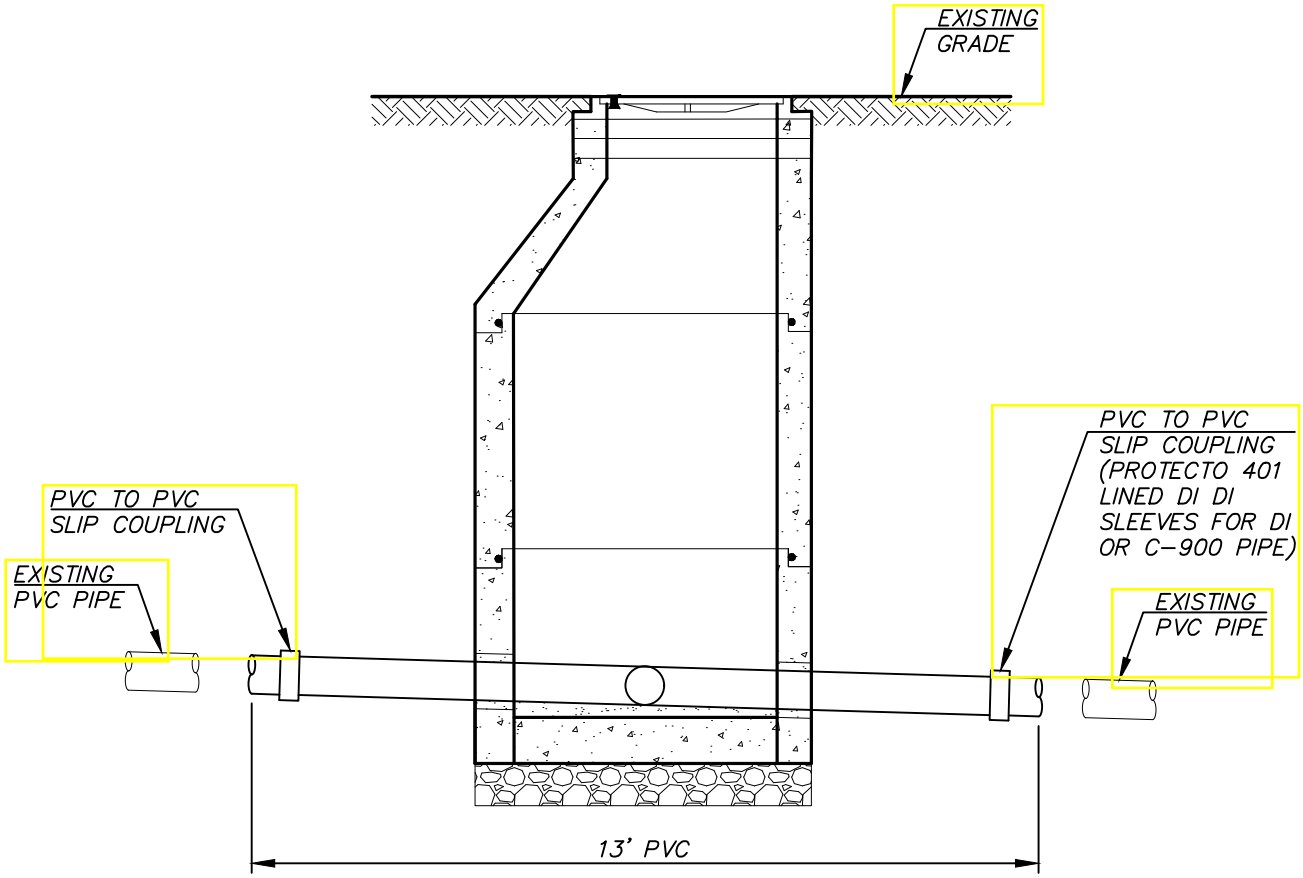

NOTES

1. PRIOR TO CUTTING THE EXISTING SEWER MAIN, THE CONTRACTOR SHALL HAVE EXACT MEASUREMENTS OF THE EXISTING PIPE INVERTS AND LENGTH MEASUREMENTS FOR INSTALLATION OF THE NEW MANHOLE AND NEW SEWER MAIN.
2. THE CONTRACTOR'S EXCAVATION SHALL BE ADEQUATE TO INSTALL THE SADDLE MANHOLE PRIOR TO CUTTING THE EXISTING SEWER MAIN.
3. THE CONTRACTOR SHALL BYPASS PUMP THE SEWER FLOW DURING THIS INSTALLATION.
4. THE CONTRACTOR SHALL HAVE A VACTOR TRUCK AVAILABLE FOR THIS CONSTRUCTION WORK.
5. SEE DISTRICT STANDARD MANHOLE DETAIL FOR OTHER SPECIFIC INSTALLATION REQUIREMENTS.
6. FOR A 72-INCH MANHOLE USE ROMAC DUCTILE IRON (DI) / PVC COUPLING TO CONNECT NEW PIPE TO EXISTING PIPE. USE 15-FOOT PIPE SEGMENT THROUGH MANHOLE.

CUT-IN ("SADDLE") MANHOLE

REV. 10/19/17

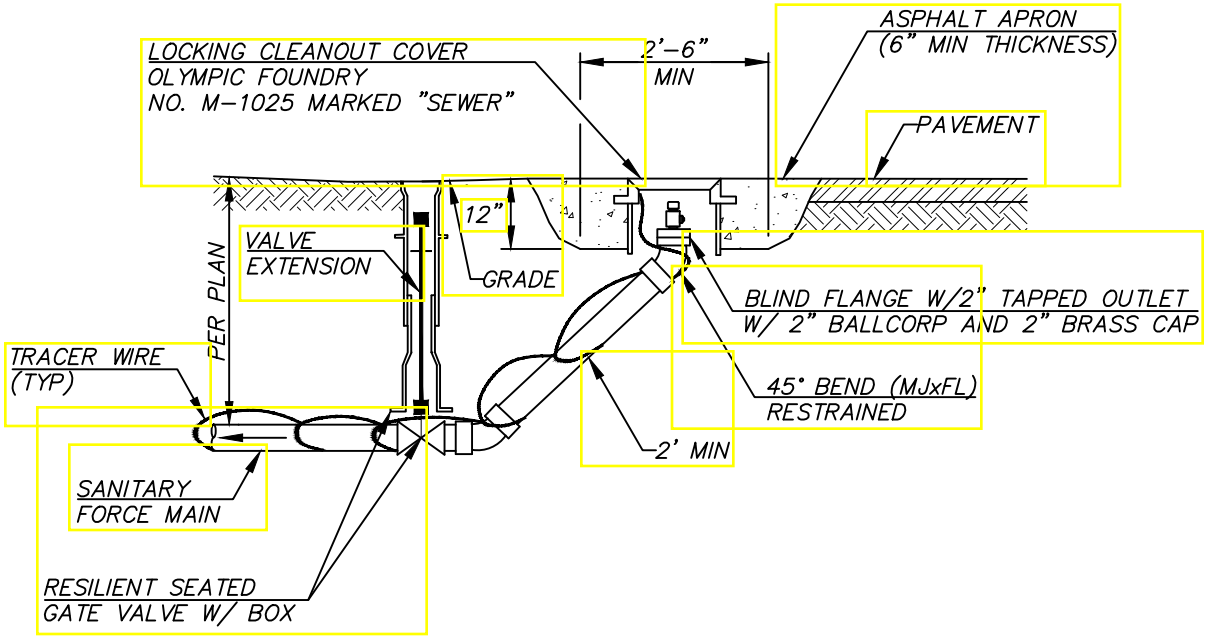

NOTES

1. VALVES, VALVE BOXES AND VALVE EXTENSIONS SHALL MEET THE SAME REQUIREMENTS AS SHOWN IN THE STANDARD WATER DETAILS. VALVE BOX COVERS SHALL BE OLYMPIC FOUNDRY 940 OR EQUAL MARKED "SEWER".

2. VALVE MARKER POSTS SHALL MEET THE SAME REQUIREMENTS AS SHOWN IN THE WATER DETAILS AND BE PAINTED AS SPECIFIED IN THE STANDARD CONSTRUCTION NOTES.

3. ALL D.I. PIPE AND FITTINGS SHALL BE PROTECTOR 401 EPOXY COATED. ALL PIPE AND FITTINGS SHALL BE RESTRAINED JOINT.

SANITARY FORCE MAIN CLEANOUT, TYPE II REV. 10/19/17

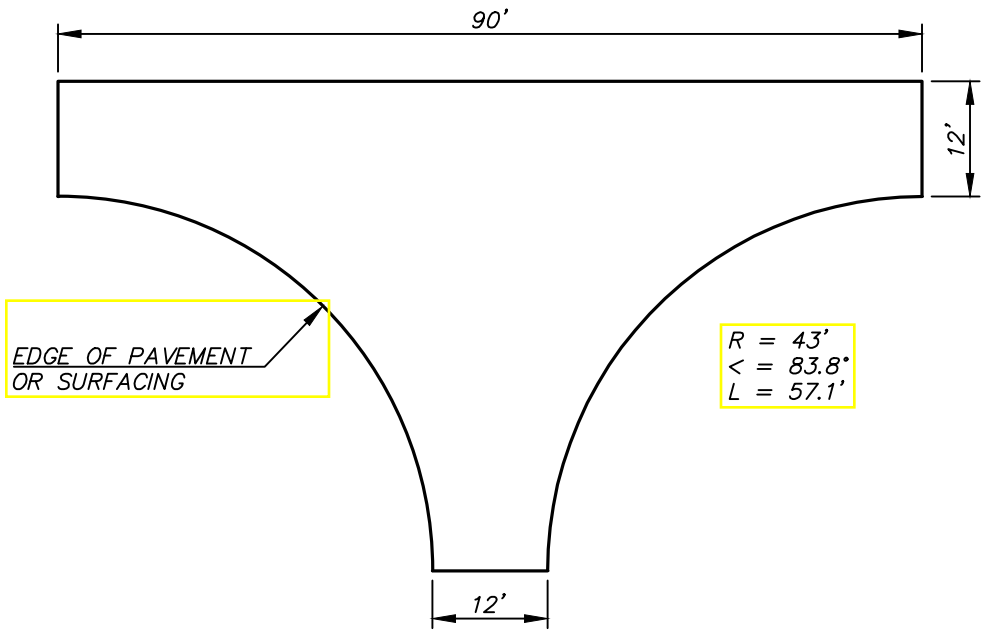

REV. 10/19/17

VACTOR TRUCK MINIMUM HAMMERHEAD TURNAROUND

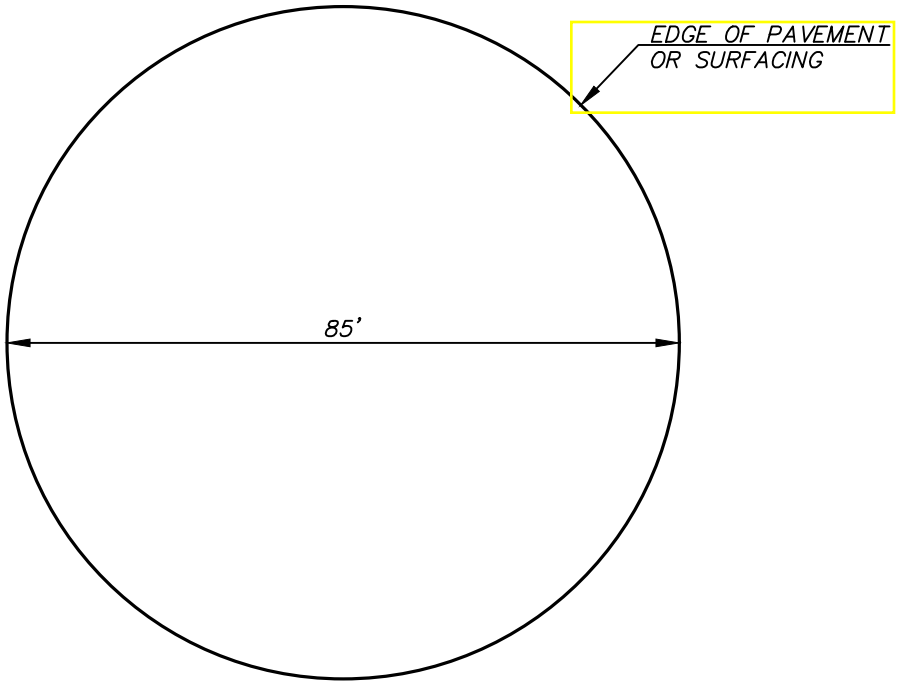

VACTOR TRUCK MINIMUM CIRCULAR TURNAROUND

REV. 10/19/17

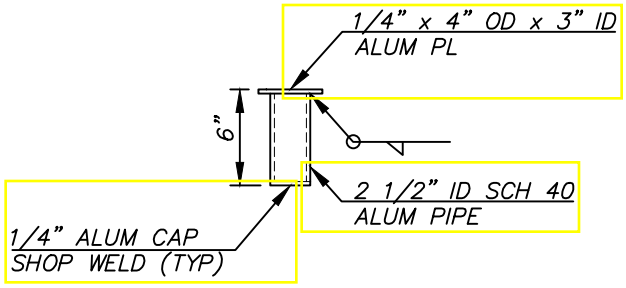

PLUG

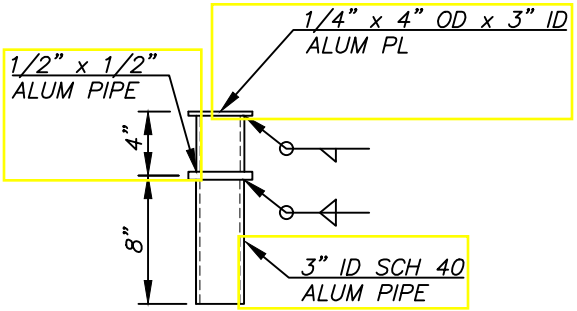

SOCKET (EMBED)

RECESSED SOCKET

REV. 10/19/17

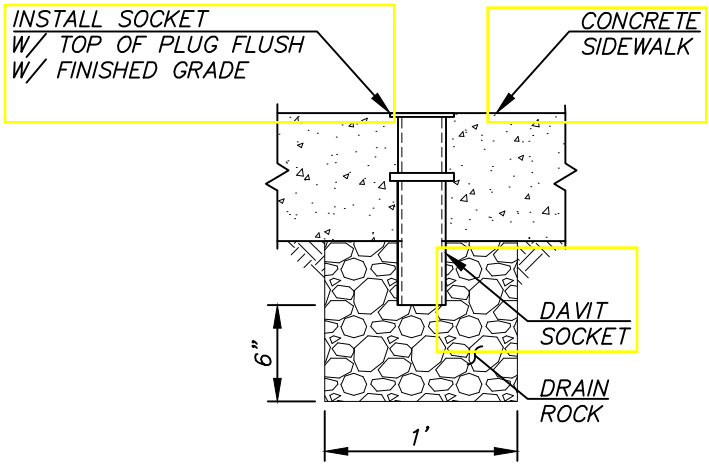

DAVIT SOCKET INSTALLATION SECTION

REV. 10/19/17

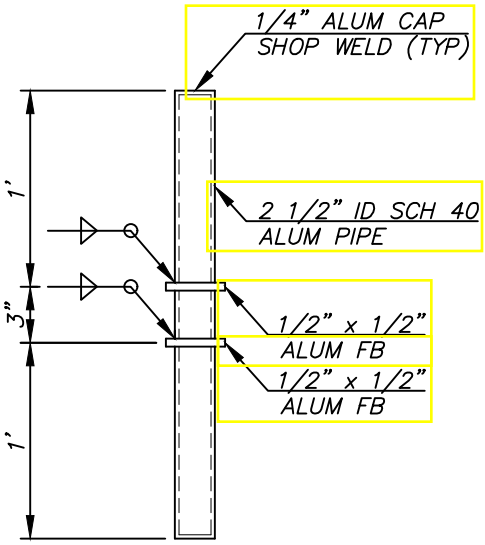

DAVIT SPINDLE

REV. 10/19/17

CROSS CONNECTION DETAILS

PROCEDURAL REQUIREMENTS

1. ALL ASSEMBLIES MUST BE ON THE WASHINGTON STATE DEPARTMENT OF HEALTH APPROVED BACKFLOW ASSEMBLY LIST.

2. ALL ASSEMBLIES ARE REQUIRED TO BE TESTED BY A WASHINGTON STATE CERTIFIED TESTER UPON INSTALLATION AND ANNUALLY. IN ADDITION, ASSEMBLIES MUST BE TESTED AFTER REPAIRS, RELOCATION, REINSTALLATION AND AFTER A BACKFLOW INCIDENT. NOTE THAT AIR GAPS INSTALLED IN LIEU OF A REDUCED PRESSURE BACKFLOW ASSEMBLY ALSO REQUIRE ANNUAL INSPECTION. TEST REPORTS MUST BE SUBMITTED IMMEDIATELY TO THE DISTRICT.

3. CONTACT DISTRICT FOR INSPECTION OF ALL NEWLY INSTALLED ASSEMBLIES.

4. A CATALOG CUT PRODUCT SUBMITTAL SHALL BE PROVIDED TO THE DISTRICT PRIOR TO INSTALLATION FOR VERIFICATION OF ASSEMBLY APPROVAL STATUS.

5. WHEN INSTALLING AN ASSEMBLY INSIDE A BUILDING, ENSURE ASSEMBLY IS LOCATED WHERE OCCASIONAL SPITTING FROM THE RELIEF VALVE PORT, A FOULED CHECK, OR WATER FLUSHED OUT DURING THE ANNUAL TEST WILL NOT BE OBJECTIONABLE. PROPER DRAINAGE MUST BE PROVIDED. DISTRICT WRITTEN APPROVAL MUST BE RECEIVED FOR INSIDE INSTALLATIONS.

6. ALL RBPA ASSEMBLIES SHALL BE PROTECTED FROM FREEZING, FLOODING AND MECHANICAL DAMAGE DUE TO WATER HAMMER AND EXCESSIVE PRESSURE BUILD UP.

INSTALLATION REQUIREMENTS

1. CONTACT DISTRICT TO ENSURE YOU ARE INSTALLING THE CORRECT ASSEMBLY FOR THE DEGREE OF HAZARD.

2. ASSEMBLY MUST BE INSTALLED AS A UNIT, INCLUDING TWO SHUT OFF VALVES, RELIEF PORT, TWO CHECK VALVES, AND FOUR TEST COCKS. ALL ASSEMBLIES ARE REQUIRED TO BE AS A UNIT IN THE CONFIGURATION THEY WERE APPROVED BY DOH AND USC.

3. THOROUGHLY FLUSH THE WATER LINE PRIOR TO INSTALLING ASSEMBLIES.

4. ASSEMBLIES MUST BE INSTALLED A MINIMUM OF 12-INCHES FROM THE BOTTOM OF THE RELIEF PORT TO FINISHED GRADE, AND NO HIGHER THAN 5-FEET FROM THE FLOOR TO CENTERLINE OF ASSEMBLY. AN ASSEMBLY INSTALLED MORE THAN 5-FEET ABOVE FLOOR OR GROUND LEVEL MUST HAVE A PERMANENT PLATFORM UNDER IT FOR THE TESTER OR MAINTENANCE PERSON TO STAND ON. THE PLATFORM MUST COMPLY WITH ALL CURRENT AND APPLICABLE SAFETY STANDARDS AND CODES IN EFFECT. ALL ASSEMBLIES MUST BE INSTALLED HORIZONTALLY, UNLESS THEY HAVE WASHINGTON STATE APPROVAL TO BE INSTALLED VERTICALLY. IF INSTALLED IN A VERTICAL CONFIGURATIONS, IT MUST BE A MINIMUM OF 12-INCHES FROM FLOOR, AND NO HIGHER THAN 5-FEET FROM THE FLOOR TO CENTER OF THE #2 SHUT OFF VALVE. ALL ASSEMBLIES MUST MAINTAIN A SUFFICIENT CLEARANCE FROM ANY WALL TO ENSURE ACCESSIBILITY OF MAINTENANCE AND TESTING. SIZES 2-1/2 INCHES AND LARGER IN DIAMETER MAY REQUIRE ADDITIONAL SPACE ON ONE SIDE OF THE ASSEMBLY. ASSEMBLIES 2-1/2 INCHES AND LARGER IN DIAMETER SHALL HAVE SUPPORT BLOCK TO PREVENT FLANGE DAMAGE.

5. REDUCED PRESSURE BACKFLOW ASSEMBLIES SHALL NOT BE INSTALLED BELOW GROUND AT ANYTIME.

6. ASSEMBLIES MUST MEET THE ABOVE REQUIREMENTS TO ENSURE ACCESSIBILITY FOR TESTING, MAINTENANCE AND APPROVAL OF THE DISTRICT. VARIANCE OF ANY INSTALLATION MUST HAVE PRIOR WRITTEN APPROVAL OF THE DISTRICT.

AIR GAP REQUIREMENTS

1. AIR GAP MUST BE TWICE THE INLET DIAMETER OF THE INLET PIPE, MINIMUM OF 1-INCH FOR 1/2" PIPE OR SMALLER.

2. THE AIR GAP MUST PROVIDE A PHYSICAL SEPARATION FROM THE BOTTOM OF THE INLET PIPING TO THE TOP OF THE OVERFLOW RIM OF THE RECEIVING VESSEL.

3. IF INLET PIPING IS CUT DIAGONALLY TO DECREASE SPLASHING, THE AIR GAP SEPARATION IS MEASURED FROM THE BOTTOM OF THE CUT TO THE RECEIVING VESSEL.

4. IF AIR GAP IS LOCATED NEAR SIDEWALLS, THE SEPARATION INCREASES TO THREE TIMES THE INLET DIAMETER OF THE INLET PIPING, MINIMUM OF 1-1/2 INCHES.

REV. 6/9/17

STANDARD RPBA NOTES & INSTALLATION REQUIREMENTS

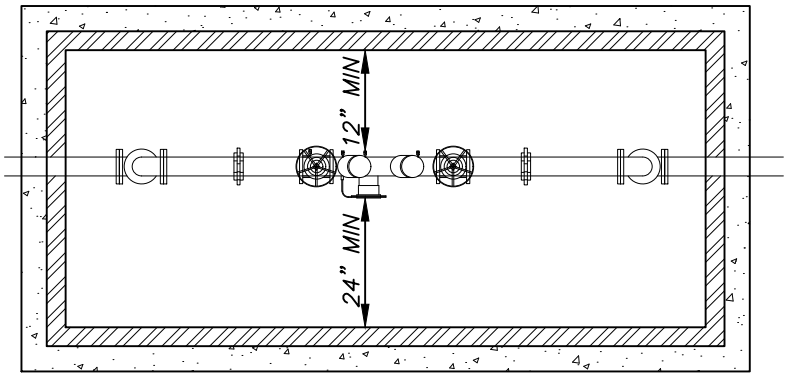

PLAN

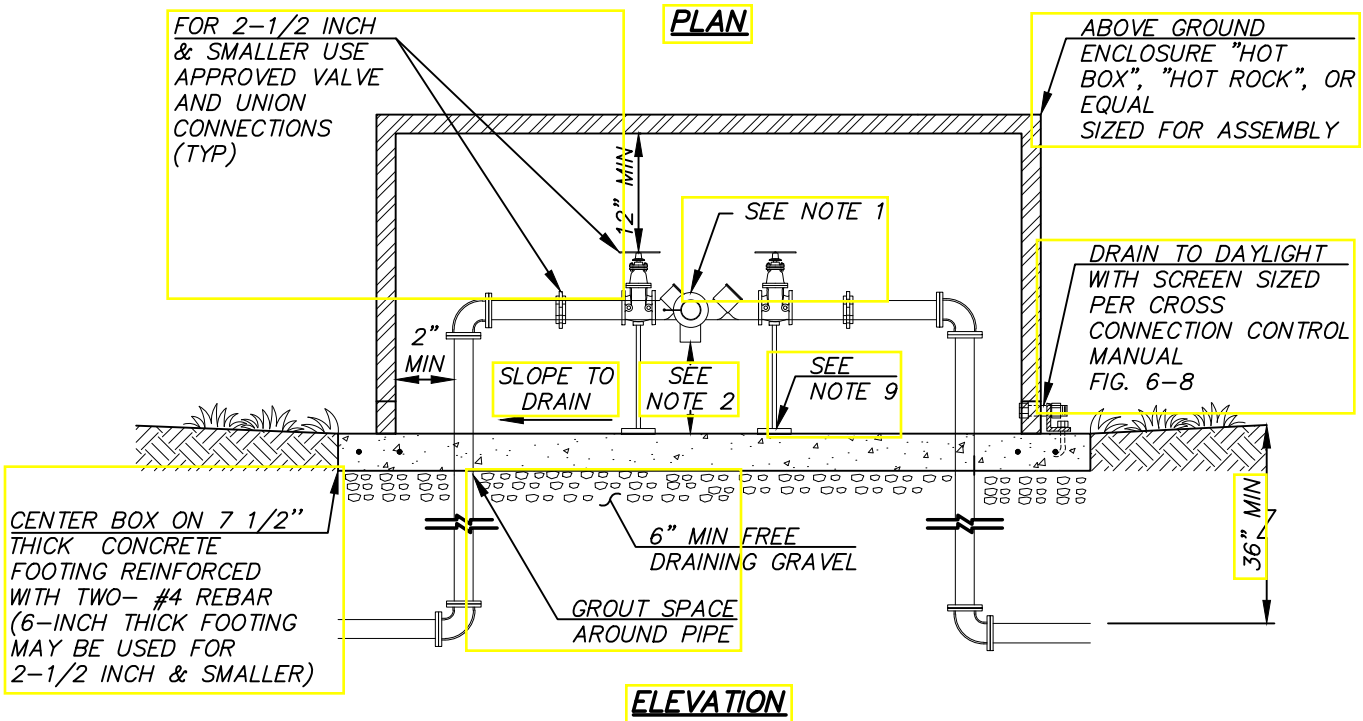

ELEVATION

RPBA INSTALLATION NOTES

1. MUST BE ON THE LATEST DEPT. OF HEALTH APPROVED LIST OF BACKFLOW PREVENTION ASSEMBLIES.
2. MUST BE INSTALLED ABOVE FINISHED GRADE, MIN. 12 INCHES TO BOTTOM OF RELIEF PORT.
3. WHEN INSTALLED INSIDE A BUILDING, A FLOOR DRAIN SIZED TO ACCEPT MAXIMUM DISCHARGE FROM THE RELIEF ASSEMBLY IS REQUIRED.
4. FREEZE PROTECTION MUST BE PROVIDED.
5. RISERS AND ALL PIPE IN BOX TO BE BRASS, COPPER, OR PVC.
6. DO NOT INSTALL IN AN AREA SUBJECT TO FLOODING. ASSEMBLIES MUST BE INSTALLED ABOVE GROUND.
7. A DISTRICT CROSS CONNECTION SPECIALIST SHALL INSPECT INSTALLATION OF DEVICE AND RECEIVE TEST REPORTS PRIOR TO ESTABLISHMENT OF WATER SERVICE OR APPROVAL. TEST REPORTS MUST BE SIGNED BY A CERTIFIED BACKFLOW ASSEMBLY TESTER AND IMMEDIATELY SENT TO THE DISTRICT.
8. SOME CLEARANCES (I.E. SIDE AND TOP) MAY NOT BE REQUIRED FOR DEVICES WITH A FULLY REMOVABLE ENCLOSURE.
9. SUPPORTS MUST BE INSTALLED FOR SIZES LARGER THAN 2-1/2".

REV. 10/19/17

REDUCED PRESSURE BACKFLOW ASSEMBLY (RPBA) INSTALLATION

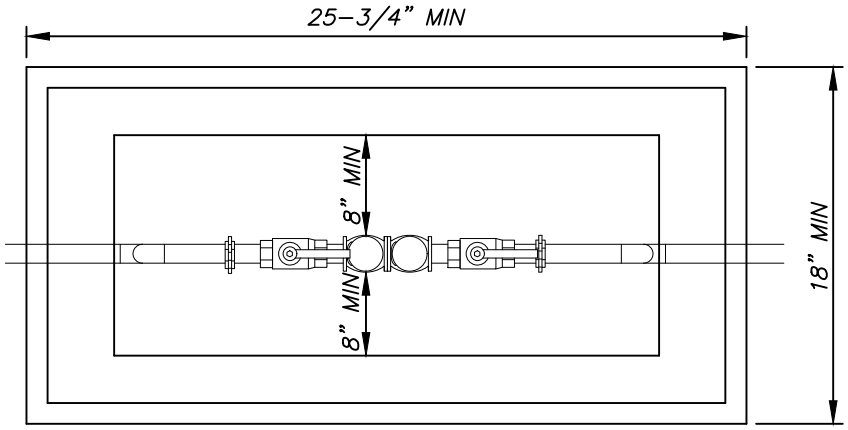

PLAN

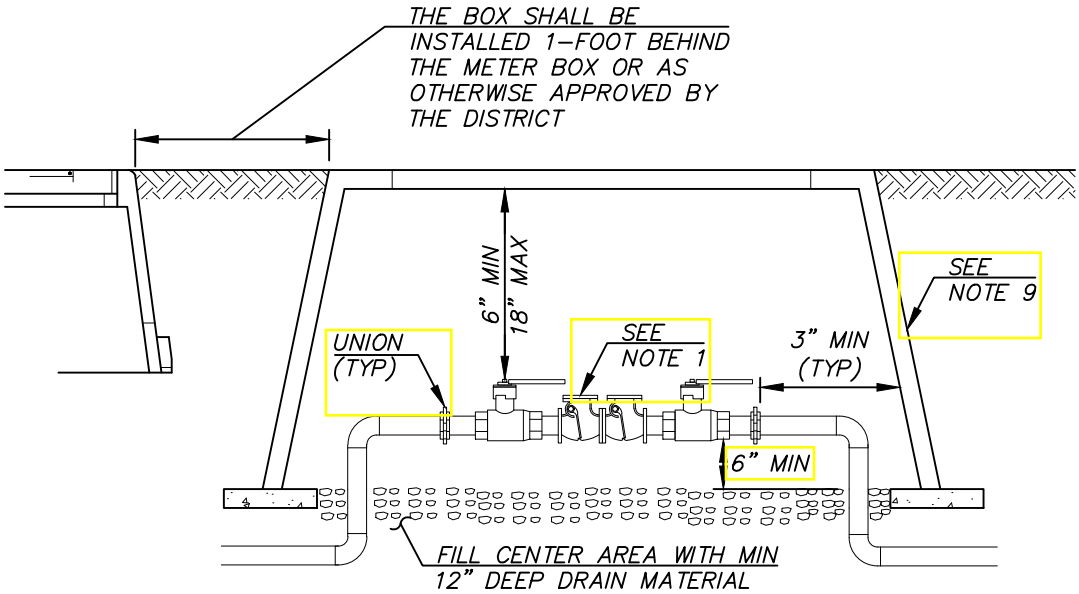

ELEVATION

DCVA INSTALLATION NOTES

1. MUST BE ON THE LATEST DEPT. OF HEALTH APPROVED LIST OF BACKFLOW PREVENTION ASSEMBLIES.
2. MAY BE INSTALLED BELOW GROUND IN AN APPROVED VAULT.
3. FREEZE PROTECTION IS THE RESPONSIBILITY OF THE OWNER.
4. RISERS AND ALL PIPE IN BOX TO BE BRASS, COPPER, OR PVC.
5. THE DCVA SHALL NOT BE INSTALLED WHERE IT MAY BECOME SUBMERGED.
6. A DISTRICT CROSS CONNECTION SPECIALIST SHALL INSPECT INSTALLATION OF DEVICE AND RECEIVE TEST REPORTS PRIOR TO ESTABLISHMENT OF WATER SERVICE OR APPROVAL. TEST REPORTS MUST BE SIGNED BY A CERTIFIED BACKFLOW ASSEMBLY TESTER AND IMMEDIATELY SENT TO THE DISTRICT.
7. FOR 2-1/2" TO 3-1/2" DCVA'S, USE A UTILITY VAULT 506-LA W/LOCKING STEEL DOOR NO. 55-332.P.
8. FOR 4" AND LARGER DCVA'S, USE A UTILITY VAULT 687-LA W/BASE 687-SB AND 2 LOCKING STEEL DOOR NO. 686-TL-2-332P.
9. FOR 1-INCH AND SMALLER DCVA USE CARSON INDUSTRIES "1220-12" OR EQUAL (21-1/2"X15") FOR 1 1/4-INCH TO 2-INCH DCVA USE CARSON INDUSTRIES "JUMBO BOX 1730-12" OR EQUAL (33-1/2"X20-1/2").

REV. 10/19/17

DOUBLE CHECK VALVE ASSEMBLY (DCVA) INSTALLATION

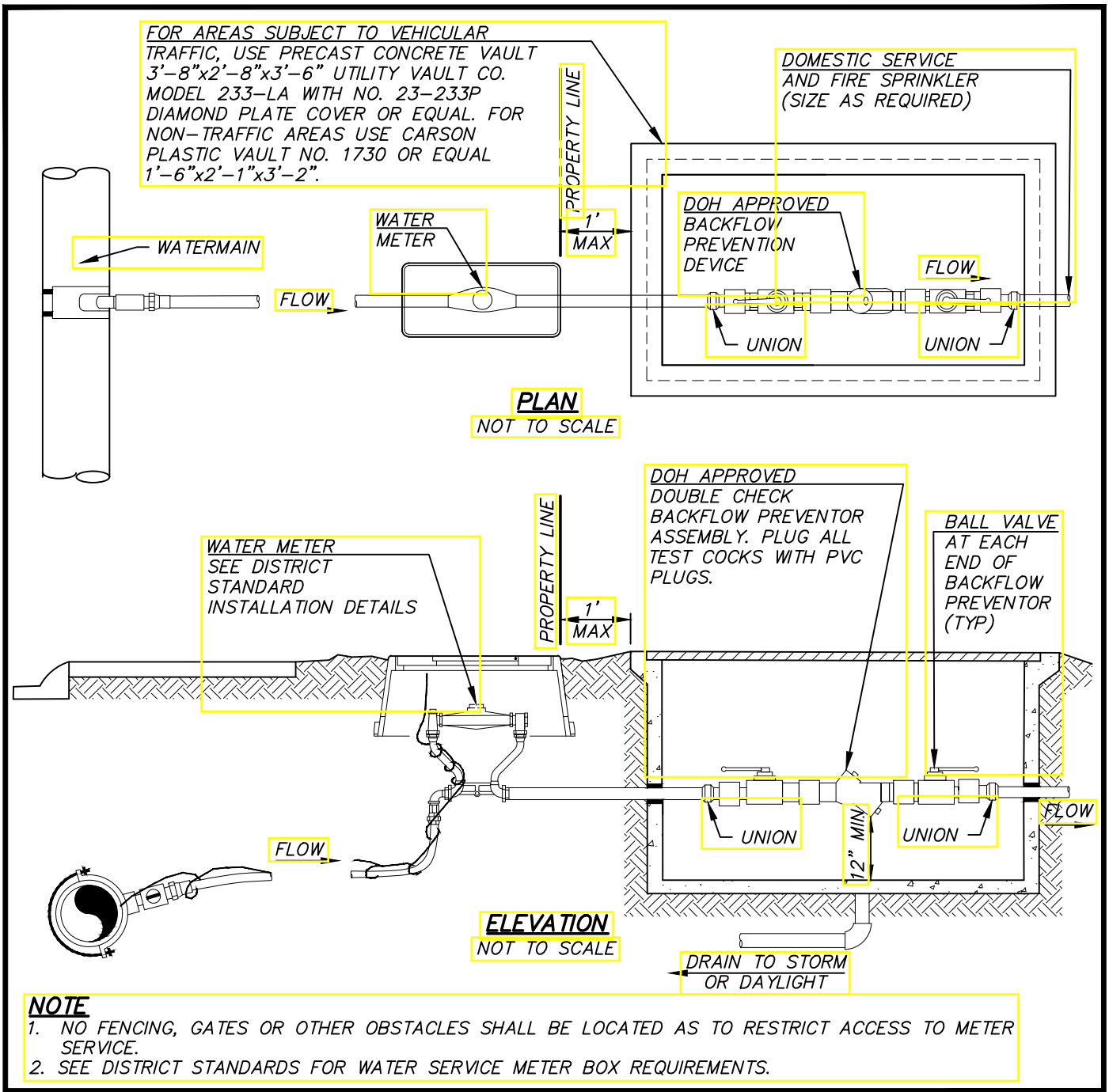

NOTE

1. NO FENCING, GATES OR OTHER OBSTACLES SHALL BE LOCATED AS TO RESTRICT ACCESS TO METER SERVICE.
2. SEE DISTRICT STANDARDS FOR WATER SERVICE METER BOX REQUIREMENTS.

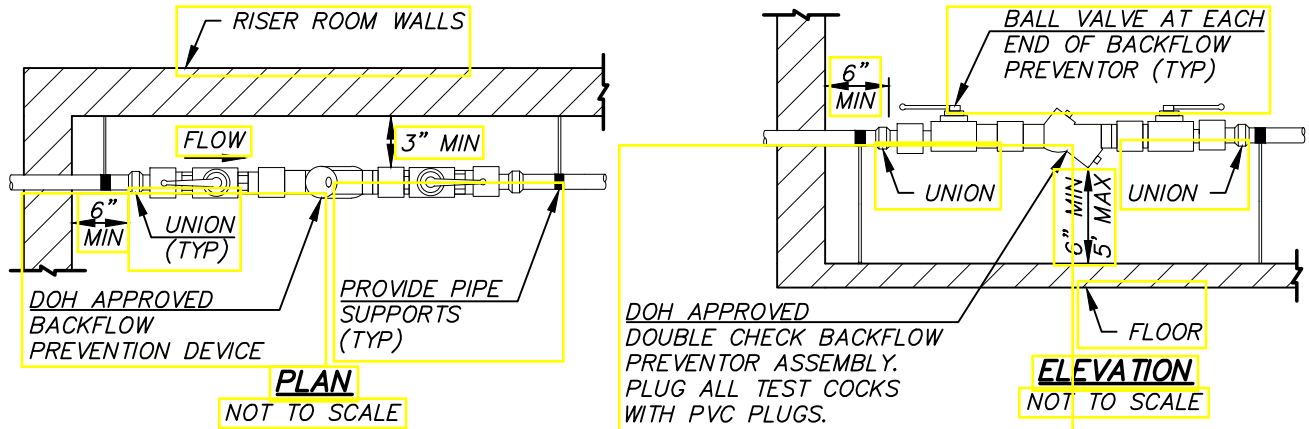

ALTERNATE/ADDITIONAL DCVA IN RISER ROOM

STANDARD FIRE SPRINKLER DCVA CONNECTION REV. 10/19/17

GENERAL DCDA NOTES

1. ALL CONSTRUCTION SHALL CONFORM TO THE APPROPRIATE FEDERAL, STATE, COUNTY OR DISTRICT REQUIREMENTS.

2. ALL DCDAs SHALL BE APPROVED FOR INSTALLATION WITHIN THE STATE OF WASHINGTON BY THE WASHINGTON STATE DEPARTMENT OF HEALTH. THE CONTRACTOR SHALL PROVIDE THE DISTRICT WITH SPECIFICATIONS AND SHOP DRAWINGS OF THE APPROVED DCDA PRIOR TO CONSTRUCTION.

3. THE SUPPLY LINE FOR THE DCDA SHALL BE DUCTILE IRON, A MINIMUM OF 4" DIA. AND MEET THE MATERIAL AND CONSTRUCTION REQUIREMENTS OF THE DISTRICT FOR WATER MAIN CONSTRUCTION.

4. THE CONTRACTOR SHALL INSTALL AT THE WATER MAIN A TEE AND 4" MINIMUM SIZED GATE VALVE ON ALL DCDA SYSTEMS. WET TAPS ARE ONLY ALLOWED ON EXISTING WATER MAINS.

5. A FLEXIBLE FITTING (MJ SLEEVE) SHALL BE INSTALLED WHEN ENTERING THE VAULT. THIS FITTING MAY BE OMITTED IF AN MJ BELL CONNECTION IS WITHIN 5 FEET OF THE VAULT.

6. THE CONTRACTOR SHALL LEVEL THE UTILITY VAULTS AND ADJUST THE COVER TO MATCH THE EXISTING GRADE OR 6" ABOVE GRADE IN UNIMPROVED AREAS.

7. THE CONTRACTOR SHALL INSTALL A LADDER-UP AS SHOWN IN THE DETAILS. SUBMIT PRODUCT INFORMATION FOR DISTRICT REVIEW.

8. ALL VAULTS SHALL BE INSTALLED WITH A 4" ZURN FLOOR DRAIN MODEL 551 W/ GRATING ON A 4" PVC DRAIN PIPE. THE DRAIN SHALL BE RUN TO DAYLIGHT OR A STORM DRAIN SYSTEM WITH A MINIMUM OF 4" SCHEDULE 80 PVC STORM PIPE. IF POSITIVE DRAINAGE FROM THE VAULT CANNOT BE ACHIEVED A SUMP PUMP SYSTEM WILL BE REQUIRED. SUMP PUMP SHALL BE ZOELLER "MIGHTY-MATE" AUTOMATIC SUBMERSIBLE PUMP. WRITTEN DISTRICT APPROVAL IS REQUIRED FOR SUMP PUMP SYSTEM. VAULT SHALL BE CONSTRUCTED SO BACKFLOW ASSEMBLY DOES NOT BECOME SUBMERGED.

9. FIRE DEPARTMENT CONNECTIONS SHALL BE LOCATED, SIZED AND INSTALLED PER THE REQUIREMENTS OF THE FIRE MARSHAL AND AS SHOWN ON THE FIRE MARSHAL APPROVED DRAWINGS.

10. IF REQUIRED, THE POST INDICATOR VALVE IS TO BE INSTALLED AT THE LOCATION APPROVED BY THE FIRE MARSHAL AND AS SHOWN ON THE FIRE MARSHAL APPROVED DRAWINGS.

11. ALL TEST COCKS INSTALLED WITH THE DCDA SHALL HAVE THE APPROPRIATE PLUGS INSTALLED.

12. SIZING OF THE DCDA AND THE DCDA SUPPLY LINE IS THE RESPONSIBILITY OF THE PROPERTY OWNER. WHERE THE DCDA IS INSTALLED WITHIN AN UNDERGROUND VAULT AS SHOWN IN THE DETAILS, THE DISTRICT WILL MAINTAIN AND OPERATE THE SUPPLY LINE BETWEEN THE MAIN AND DCDA VAULT. THE DCDA VAULT AND ALL ITEMS AFTERWARDS ARE THE RESPONSIBILITY OF THE PROPERTY OWNER.

13. BACKFLOW ASSEMBLY TYPE AND INSTALLATION REQUIREMENTS MAY VARY AND WILL BE AT THE DISTRICT'S DISCRETION BASED UPON WASHINGTON STATE DEPARTMENT OF HEALTH DRINKING WATER REGULATIONS RELATING TO CROSS CONNECTION WAC 246-290-010. THE DISTRICT REQUIREMENTS MAY BE EQUAL TO OR MORE STRINGENT THAN THE ABOVE CITED CODE.

PAINT SCHEDULE

EXTERIOR OF VAULT BELOW GRADE TWO COATS OF BLACK BITUMASTIC SOLUTION VAULT SHOULD BE DRIED WITH NO MOISTURE PRESENT PRIOR TO APPLICATION OF COATINGS.

PAINT INTERIOR PIPING AND VALVES ONLY, BACKFLOW ASSEMBLY SHALL NOT BE PAINTED.

1 - COAT RUST RESISTOR PRIMER RED #1013
2 - COATS SAFETY BLUE

DOUBLE CHECK DETECTOR ASSEMBLY NOTES REV. 10/06/17

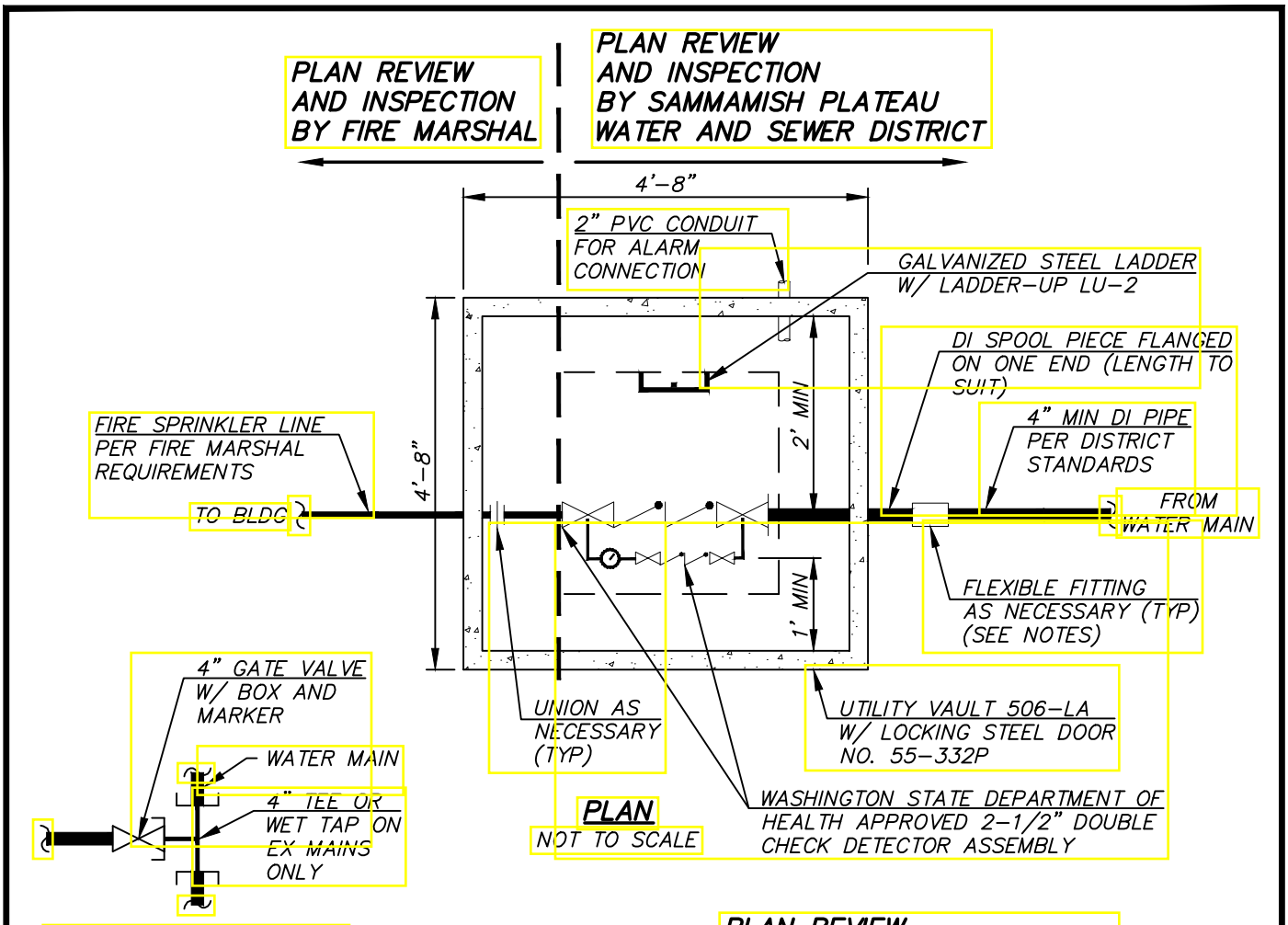

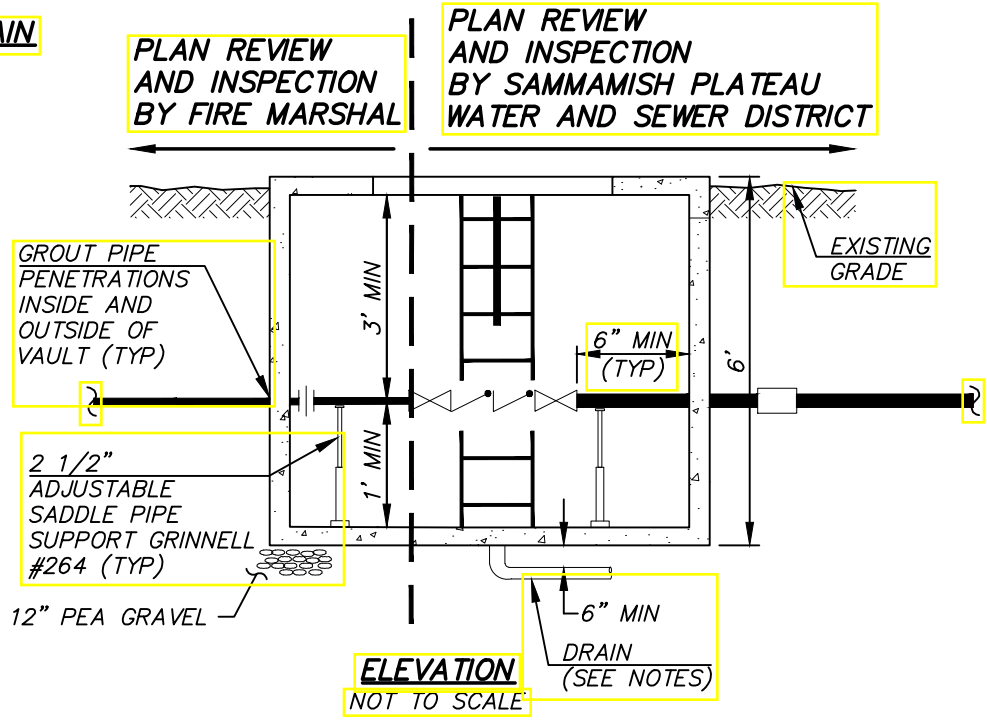

NOTE

1. FOR LOCATION OF FIRE DEPARTMENT CONNECTION (FDC) AND POST INDICATOR VALVE (PIV), IF APPLICABLE, SEE FIRE MARSHAL APPROVED DRAWINGS.
2. DISTRICT OPERATIONS AND MAINTENANCE RESPONSIBILITY OF THE WATERMAIN ENDS AT THE FACE OF THE VAULT

2-1/2" DOUBLE CHECK DETECTOR ASSEMBLY

REV. 10/19/17

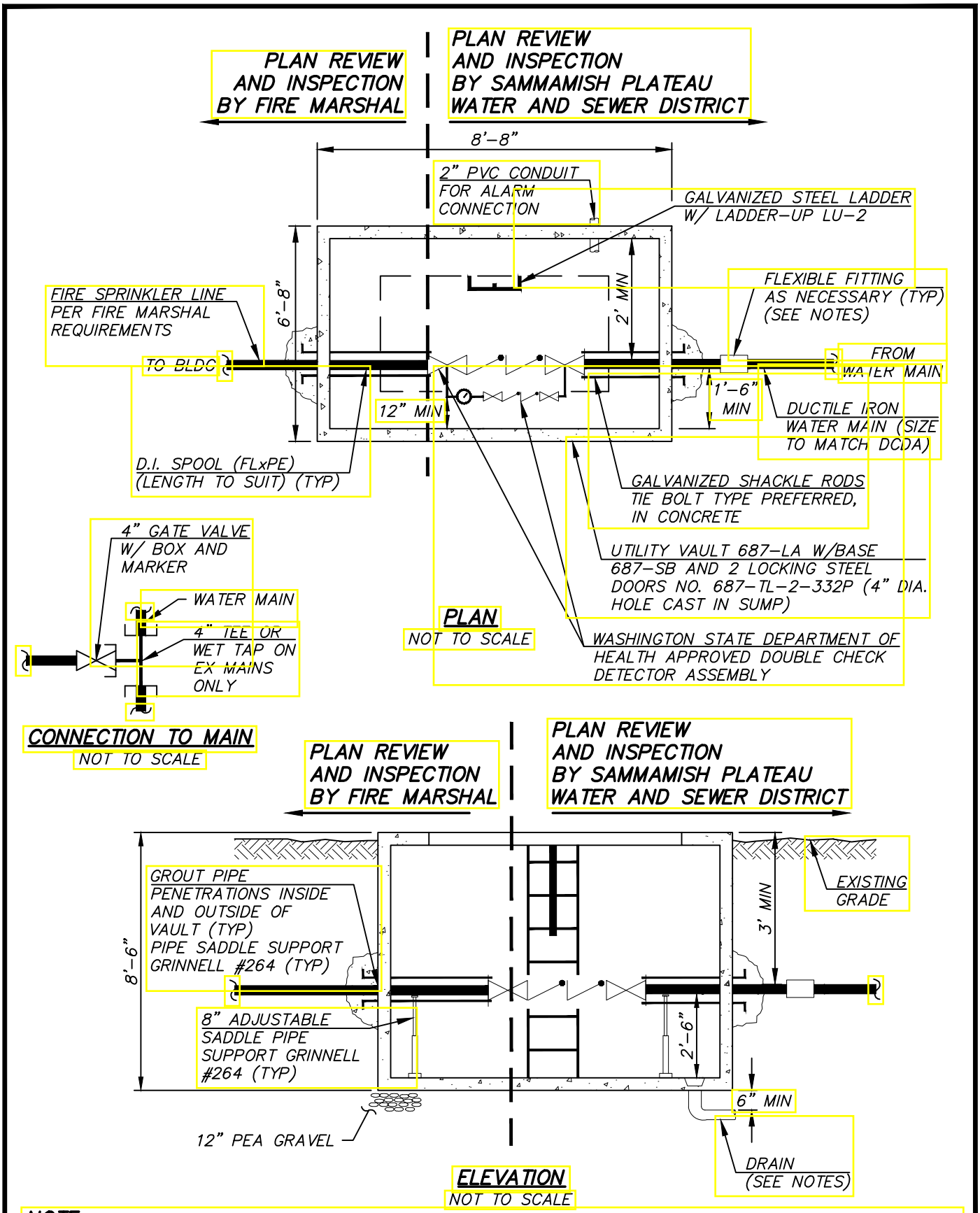

NOTE

1. FOR LOCATION OF FIRE DEPARTMENT CONNECTION (FDC) AND POST INDICATOR VALVE (PIV), IF APPLICABLE, SEE FIRE MARSHAL APPROVED DRAWINGS.
2. DISTRICT OPERATIONS AND MAINTENANCE RESPONSIBILITY OF THE WATERMAIN ENDS AT THE FACE OF THE VAULT.

4" AND LARGER DOUBLE CHECK DETECTOR ASSEMBLY

REV. 10/19/17

GRINDER PUMP PLANS

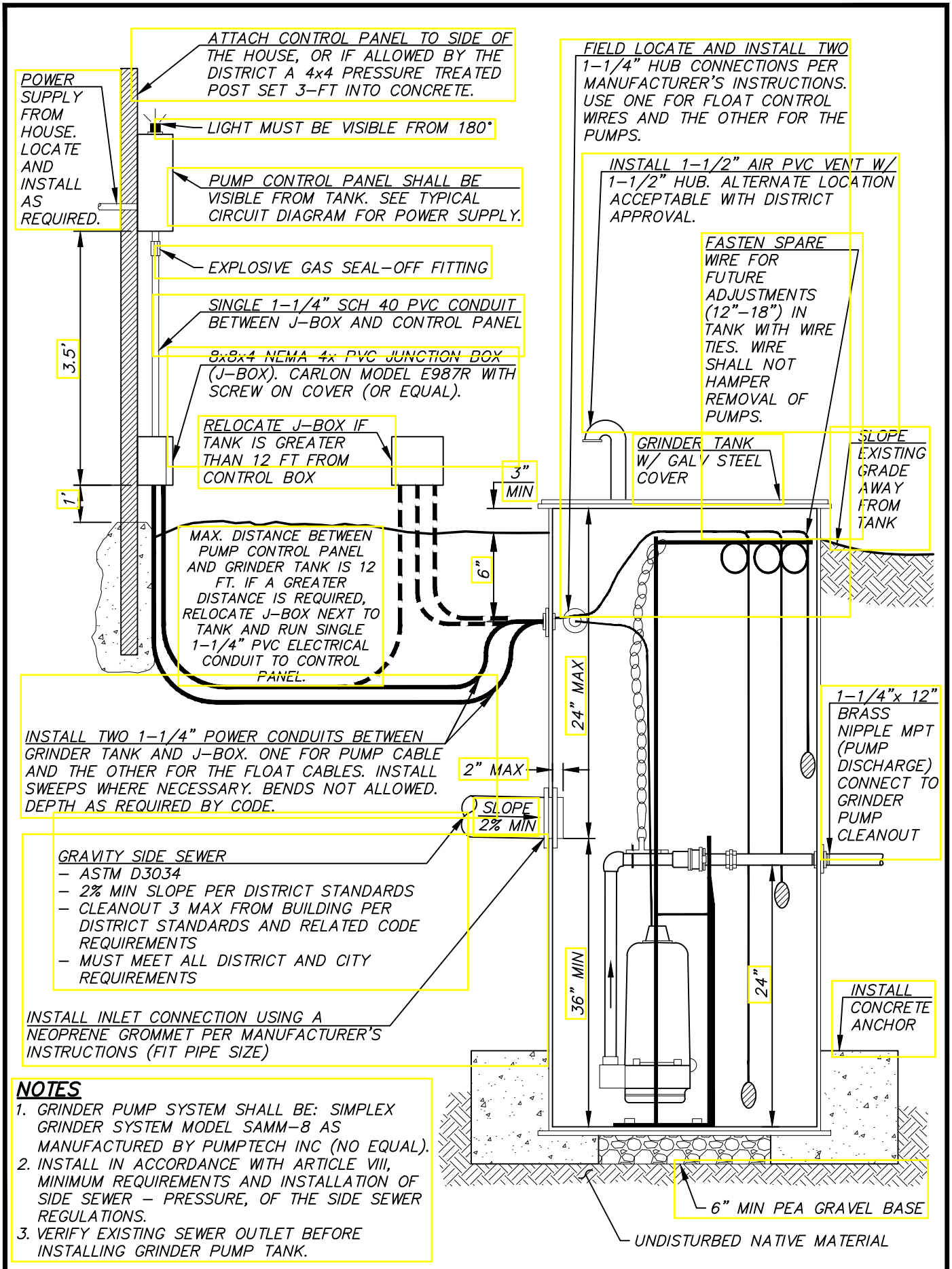

NOTES

1. GRINDER PUMP SYSTEM SHALL BE: SIMPLEX GRINDER SYSTEM MODEL SAMM-8 AS MANUFACTURED BY PUMPTECH INC (NO EQUAL).
2. INSTALL IN ACCORDANCE WITH ARTICLE VIII, MINIMUM REQUIREMENTS AND INSTALLATION OF SIDE SEWER – PRESSURE, OF THE SIDE SEWER REGULATIONS.
3. VERIFY EXISTING SEWER OUTLET BEFORE INSTALLING GRINDER PUMP TANK.

GRINDER PUMP INSTALLATION

REV. 10/19/17

NOTES

1. THE GRINDER TANK SHALL BE INSTALLED WITHIN 12-FEET OF THE PUMP CONTROL PANEL. WHERE THIS DISTANCE MUST BE EXCEEDED, THE INSTALLER SHALL OBTAIN DISTRICT APPROVAL AND THEN RELOCATE THE ELECTRICAL JUNCTION BOX (J-BOX) WITHIN 1-FT OF THE GRINDER TANK AND 6-INCHES ABOVE FINISH GRADE.
2. THE TANK LOCATION SHALL BE ACCESSIBLE FOR MAINTENANCE AND REPAIR BY DISTRICT PERSONNEL.
3. TANK COVER SHALL BE APPROX 3" ABOVE FINISHED GRADE. FINISH GRADE SHALL BE FREE DRAINING AROUND AND AWAY FROM THE TANK SO THAT SURFACE WATER CANNOT POND AROUND THE STATION.
4. AIR VENT MAY BE INSTALLED IN ALTERNATIVE LOCATION WITH DISTRICT APPROVAL.
5. POSITION GRINDER PUMP TANK TO MINIMIZE NUMBER OF BENDS IN DISCHARGE PRESSURE PIPING. BENDS SHALL BE INSTALLED IN THE GRAVITY SIDE SEWER IF NEEDED.
6. NO PLANTS ARE TO BE LOCATED WITHIN 5-FT OF THE TANK. THE PROPERTY OWNER SHALL MAINTAIN A 5-FT CLEAR ZONE AROUND THE TANK.
7. THE LOCATION OF THE CONTROL PANEL SHALL BE:
   - 1.1. ACCESSIBLE FOR EASY MAINTENANCE AND REPAIR
   - 1.2. THE ALARM LIGHT MUST BE VISIBLE 180° RADIUS FROM 50-FT
   - 1.3. VISIBLE FROM THE TANK
   - 1.4. THE BOTTOM WITHIN 4.5-FT OF FINISH GRADE.
   - 1.5. FENCES, BRUSH, OR ANY OTHER OBJECT SHALL NOT HIDE THE LIGHT OR HINDER IN THE MAINTENANCE AND OR REPAIR OF THE SYSTEM

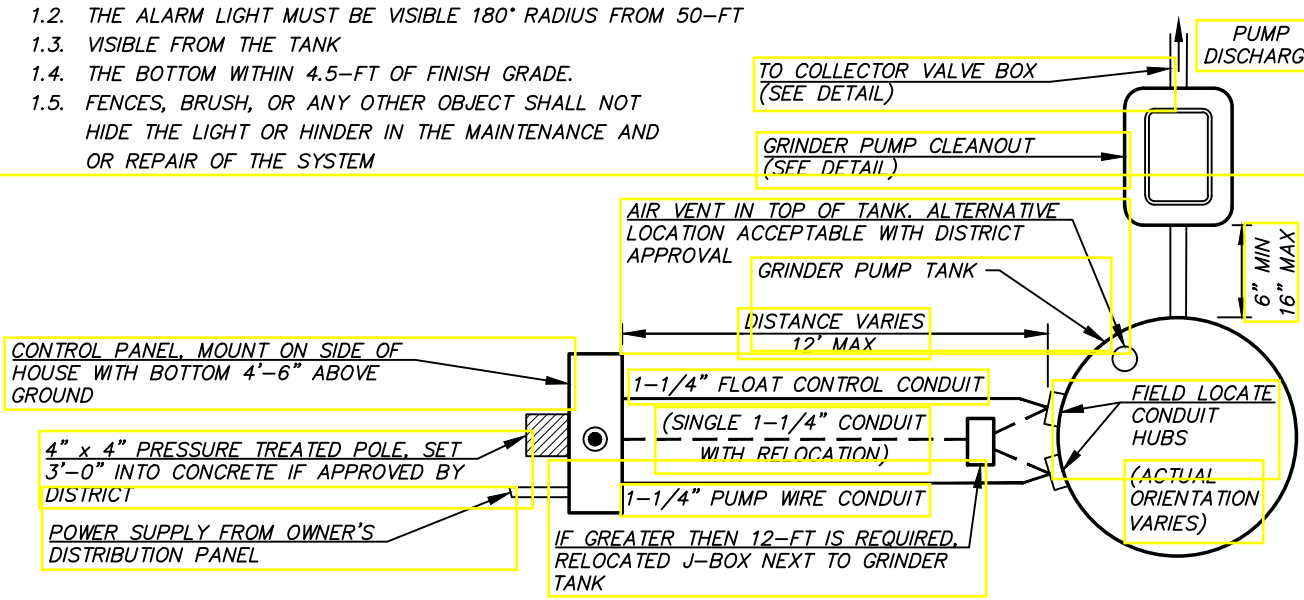

GRINDER PUMP SITE LAYOUT INSTRUCTIONS

REV. 10/19/17

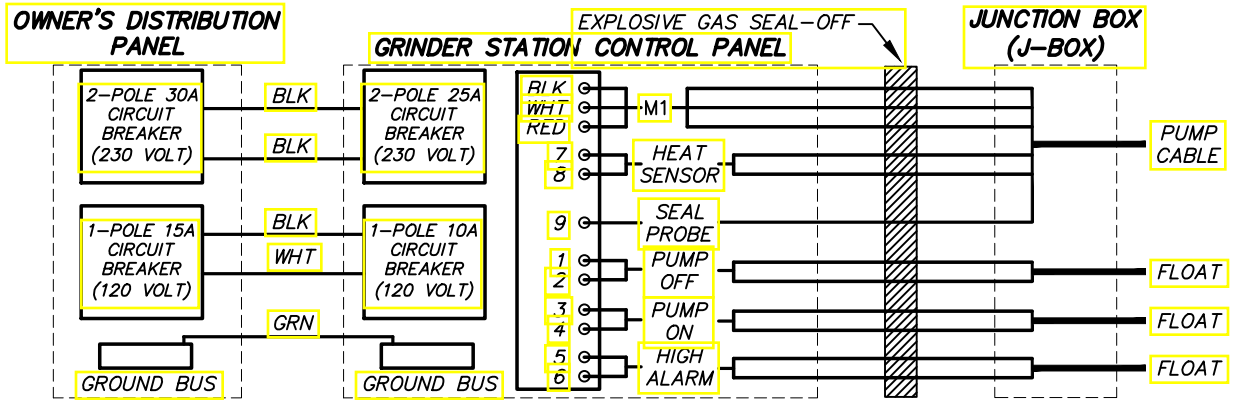

NOTES

1. PUMP AND FLOAT CABLES TO BE EXTENDED INTO AND END AT THE J-BOX USING TWO SEPARATE CONDUITS; ONE FOR THE PUMP AND ONE FOR THE FLOATS. A SINGLE CONDUIT WITH INDIVIDUAL WIRES SHALL THEN EXTENDED FROM THE J-BOX TO PUMP CONTROL PANEL.
2. RUN FROM THE J-BOX TO THE PUMP CONTROL PANEL FOUR #10 AWG THHN WIRE FOR THE PUMP (WHITE, BLACK, RED, GROUND), TWO #14 AWG THHN WIRE WITH INDIVIDUAL COLORS FOR THE PUMP SENSOR AND PROBE, AND THREE SETS OF INDIVIDUAL COLORED #14 WIRE FOR THE FLOATS.
3. AN EXPLOSIVE GAS SEAL-OFF SHALL BE INSTALLED IN THE ELECTRICAL CONDUIT JUST PRIOR TO THE PUMP CONTROL PANEL.
4. INSTALLATION MUST CONFORM TO ALL REQUIREMENTS AND REGULATIONS OF THE NATIONAL ELECTRICAL CODE. AN ELECTRICAL PERMIT AND INSPECTION IS REQUIRED WHETHER THE WORK IS PERFORMED BY THE OWNER OR A CONTRACTOR.
5. THE OWNER'S DISTRIBUTION PANEL SHALL SUPPLY ONE SEPARATE 230-V SINGLE PHASE, 30-AMP CIRCUIT FOR THE PUMP, AND ANOTHER SEPARATE 120-VOLT, 15-AMP CIRCUIT FOR THE ALARM SYSTEM.
6. THE CONTRACTOR SHALL REFER TO THE MANUFACTURER'S INSTALLATION INSTRUCTIONS FOR THE GRINDER PUMP CONTROL PANEL. THE TYPICAL CIRCUIT DIAGRAM SHOWN ABOVE IS ONLY AN EXAMPLE.

TYPICAL CIRCUIT DIAGRAM

REV. 10/19/17

ITEM	MATERIAL LIST FOR GRINDER PUMP CLEANOUT AND COLLECTOR VALVE BOX DETAILS
1	1-1/4" HDPE PRESSURE PIPE SDR 11(LENGTH TO SUIT)
2	TWO STACKED CARSON JUMBO BOX (PART #1730)
3	CARSON LID (PART #1730) MARKED "SEWER"
4	1-1/4" MALE THREADED NIPPLE SCH. 80 PVC, (LENGTH TO SUIT)
5	1-1/4" X 90° BEND THREADED SCH. 80 PVC
6	1-1/4" HDPE x 316SS MPT TRANSITION COUPLING, 6-INCH
7	1-1/4" COMPRESSION COUPLING SCH. 40 PVC
8	1-1/4" UNION BALL VALVE THREADED SCH. 80 PVC
9	1-1/4" X 3" NIPPLE THREADED SCH. 80 PVC
10	1 - 1-1/4" TEE THREADED SCH. 80 PVC
11	1-1/4" BRASS SWING CHECK VALVE
12	1-1/4" X 8" NIPPLE THREADED SCH. 80 PVC
13	1-1/4" CAP THREADED SCH. 80 PVC
14	HDPE SOCKET WELDED COUPLING
15	HDPE SOCKET WELDED REDUCER SDR 11 (SIZE TO SUIT)
16	HDPE SOCKET WELDED TEE SDR 11 (SIZE TO SUIT)

NOTES

1. ALL HDPE WELDING SHALL BE MADE USING ELECTRO-FUSION.
2. WHEN BOXES LOCATED IN TRAFFIC AREAS: WHERE BOXES ARE SUBJECTED TO ANY POSSIBLE VEHICLE LOADING, REPLACE THE CARSON BOXES WITH FOGTITE #2 CONCRETE BOXES WITH FOGTITE STEEL TRAFFIC LIDS MARKED "SEWER".

TRACER WIRE NOTES

1. ALL HDPE PIPE SHALL BE INSTALLED WITH 12-GAUGE SOLID CORE WIRE, TRACER WIRE. THE WIRE SHALL BE WRAPPED AROUND THE PIPE AS PART OF THE INITIAL INSTALLATION.
2. TRACER WIRE SHALL BE LOOPED THROUGH THE COLLECTION VALVE BOX AS SHOWN IN THE DETAIL.
3. WHERE A CUT-IN CONNECTION IS MADE TO AN EXISTING LOW PRESSURE SEWER, THE TRACER WIRES SHALL BE SPLICED TOGETHER USING BUTT CONNECTORS AND SHRINK TUBING PROTECTION.
4. TRACER WIRE SHALL EXTEND FROM THE GRINDER PUMP CLEANOUT TO THE COLLECTION VALVE BOX AS SHOWN IN THE DETAILS.

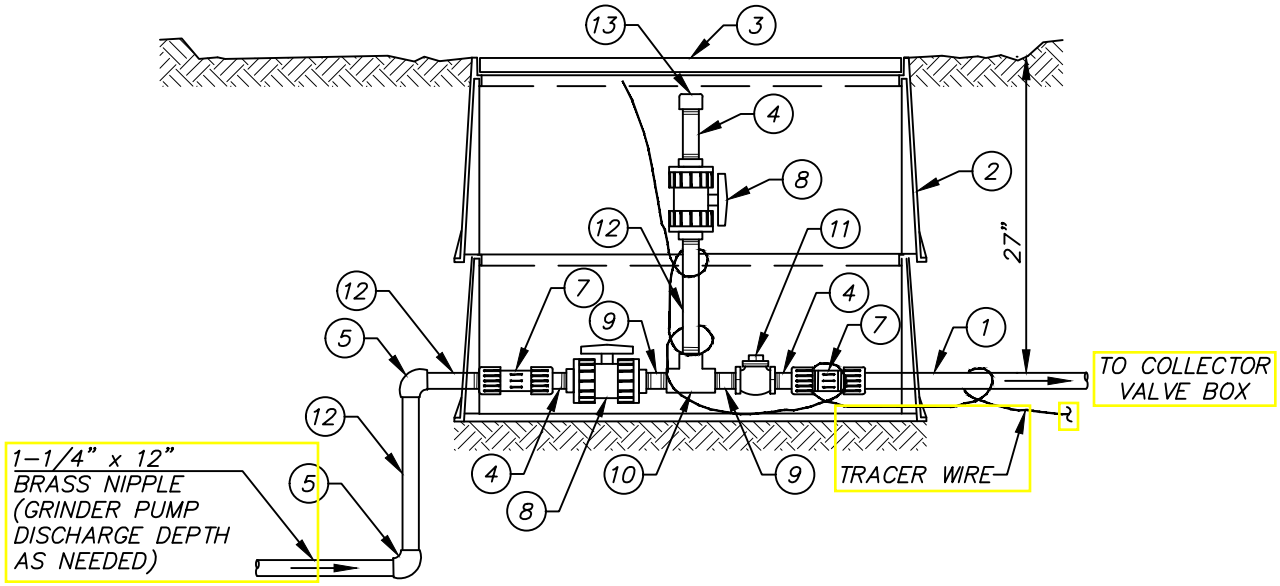

GRINDER PUMP CLEANOUT

REV. 10/19/17

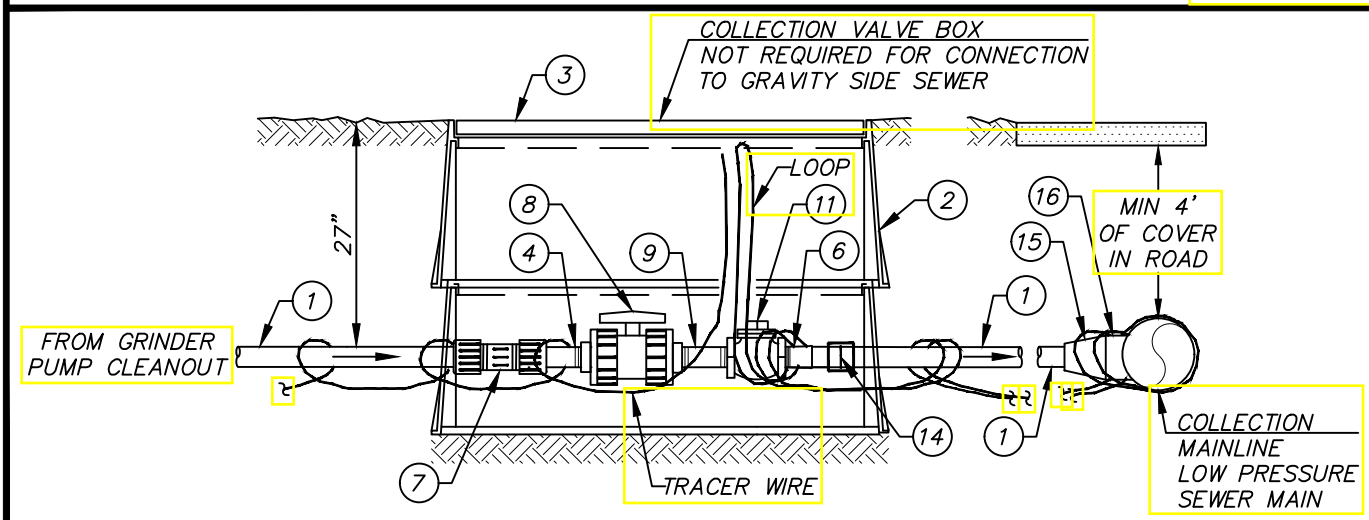

COLLECTION VALVE BOX

REV. 10/19/17

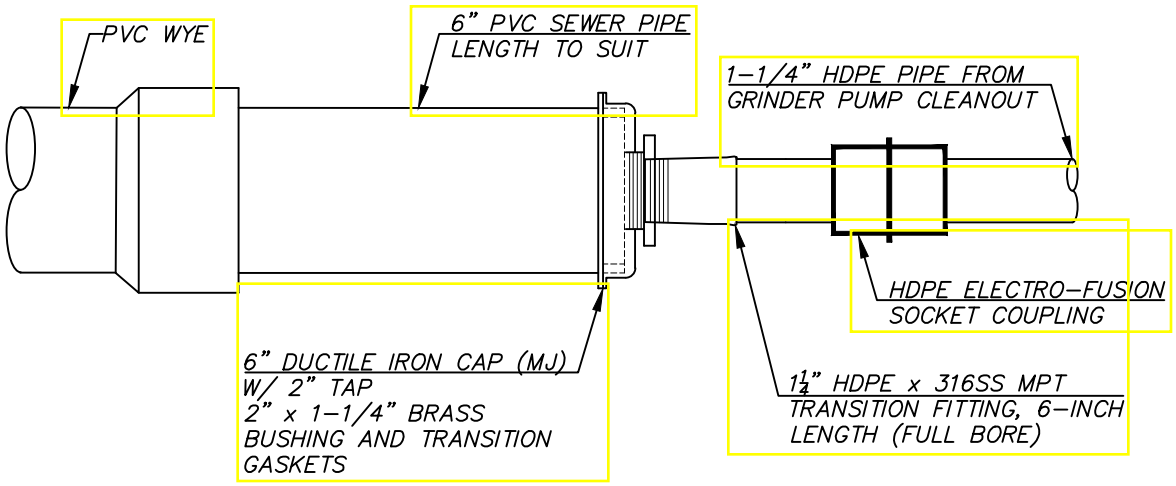

PRESSURE LINE CONNECTION

REV. 10/19/17

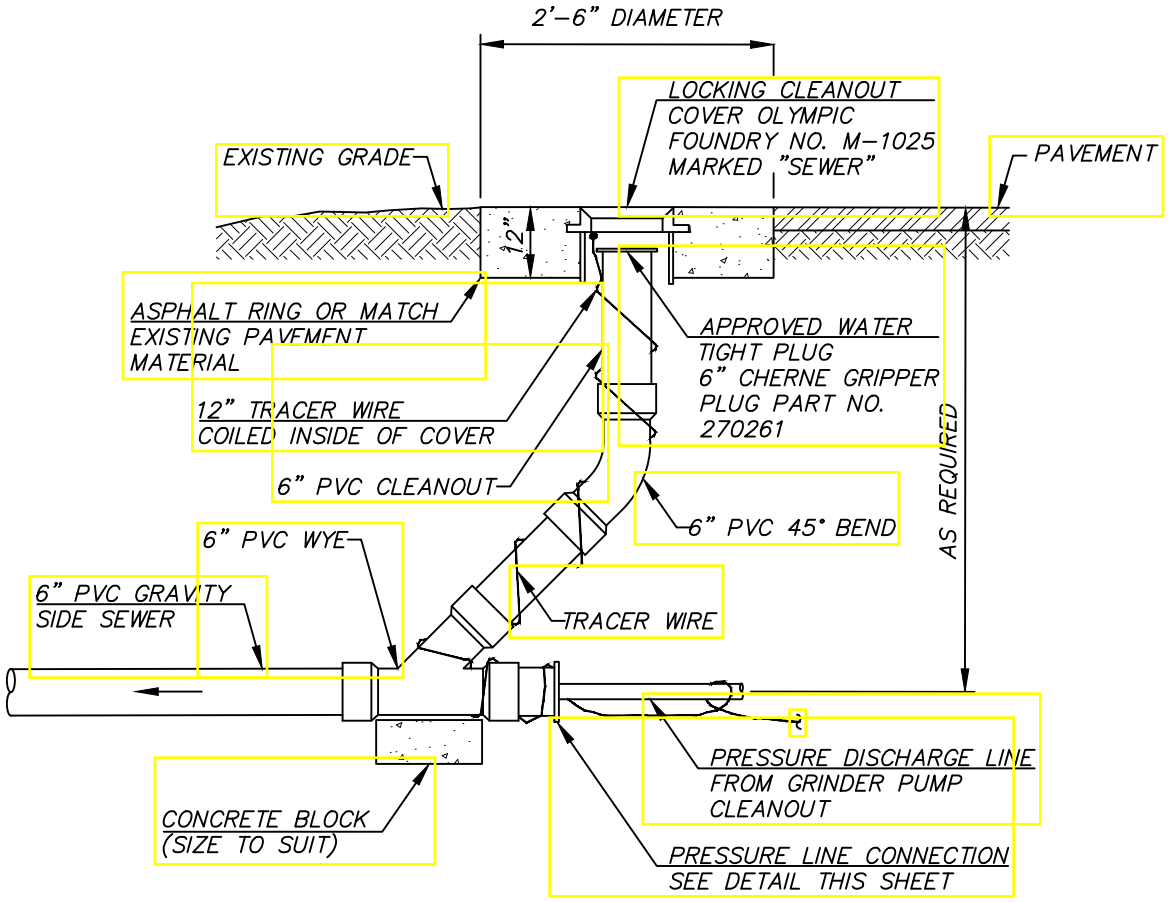

NOTES

1. ALL PVC FITTINGS SHALL BE GASKETED.
2. NO COLLECTION VALVE BOX REQUIRED WHEN CONNECTING TO A GRAVITY SIDE SEWER.

REV. 10/19/17

PRESSURE LINE CONNECTION TO GRAVITY SANITARY SEWER

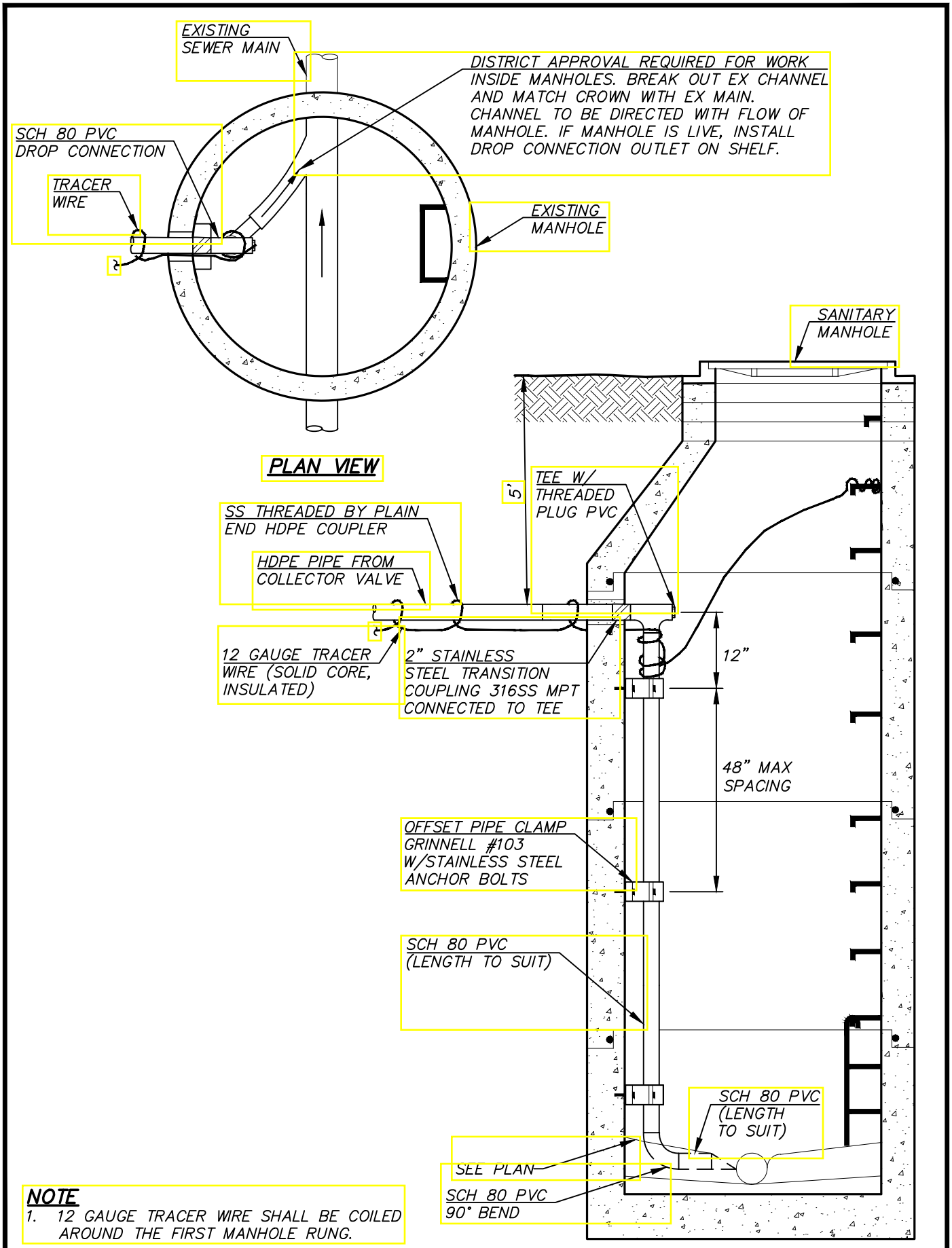

NOTE

1. 12 GAUGE TRACER WIRE SHALL BE COILED AROUND THE FIRST MANHOLE RUNG.

PRESSURE SEWER DROP CONNECTION

REV. 10/19/17

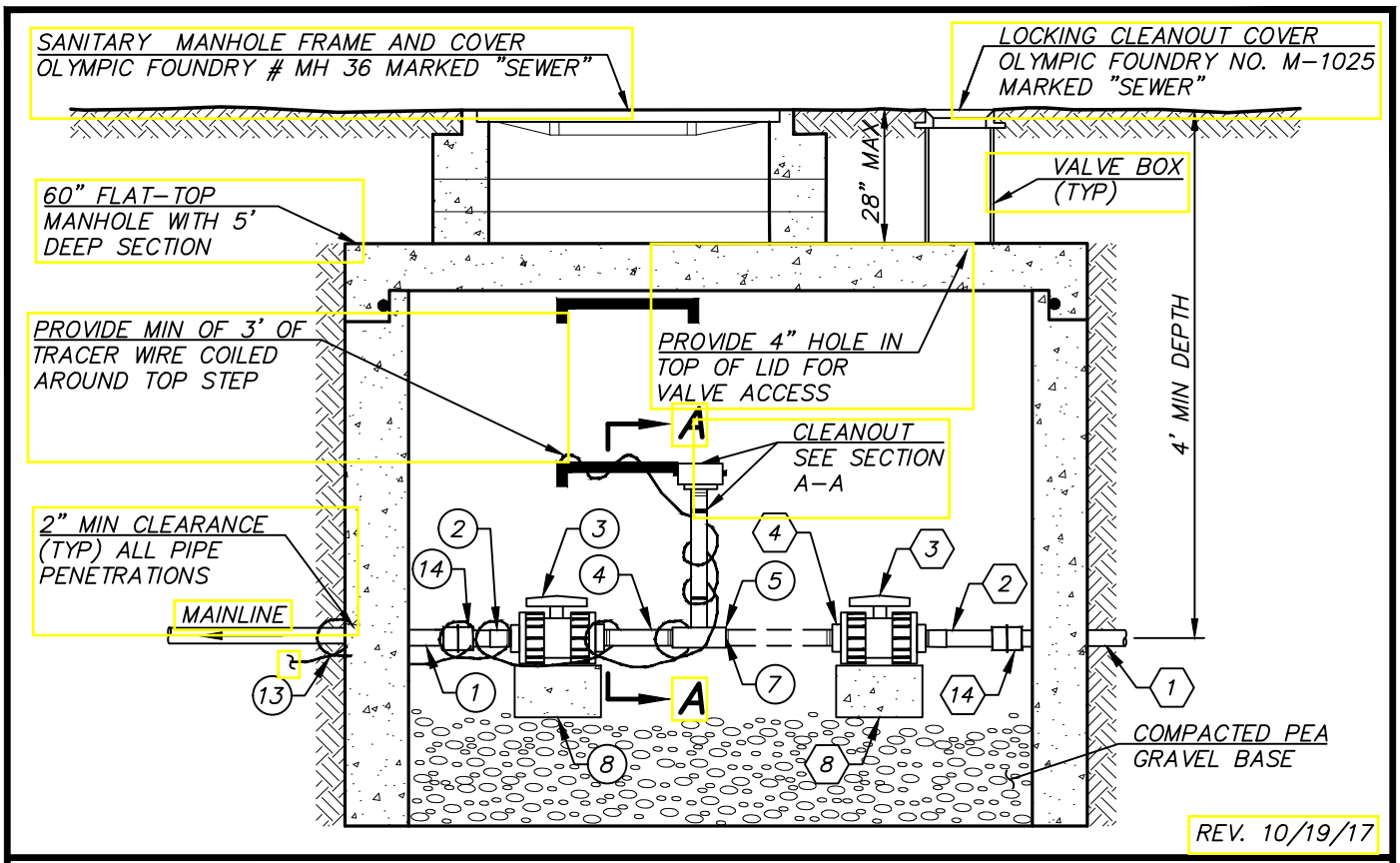

TYPE II LOW PRESSURE CLEANOUT WITH MANHOLE (TRAFFIC AREAS)

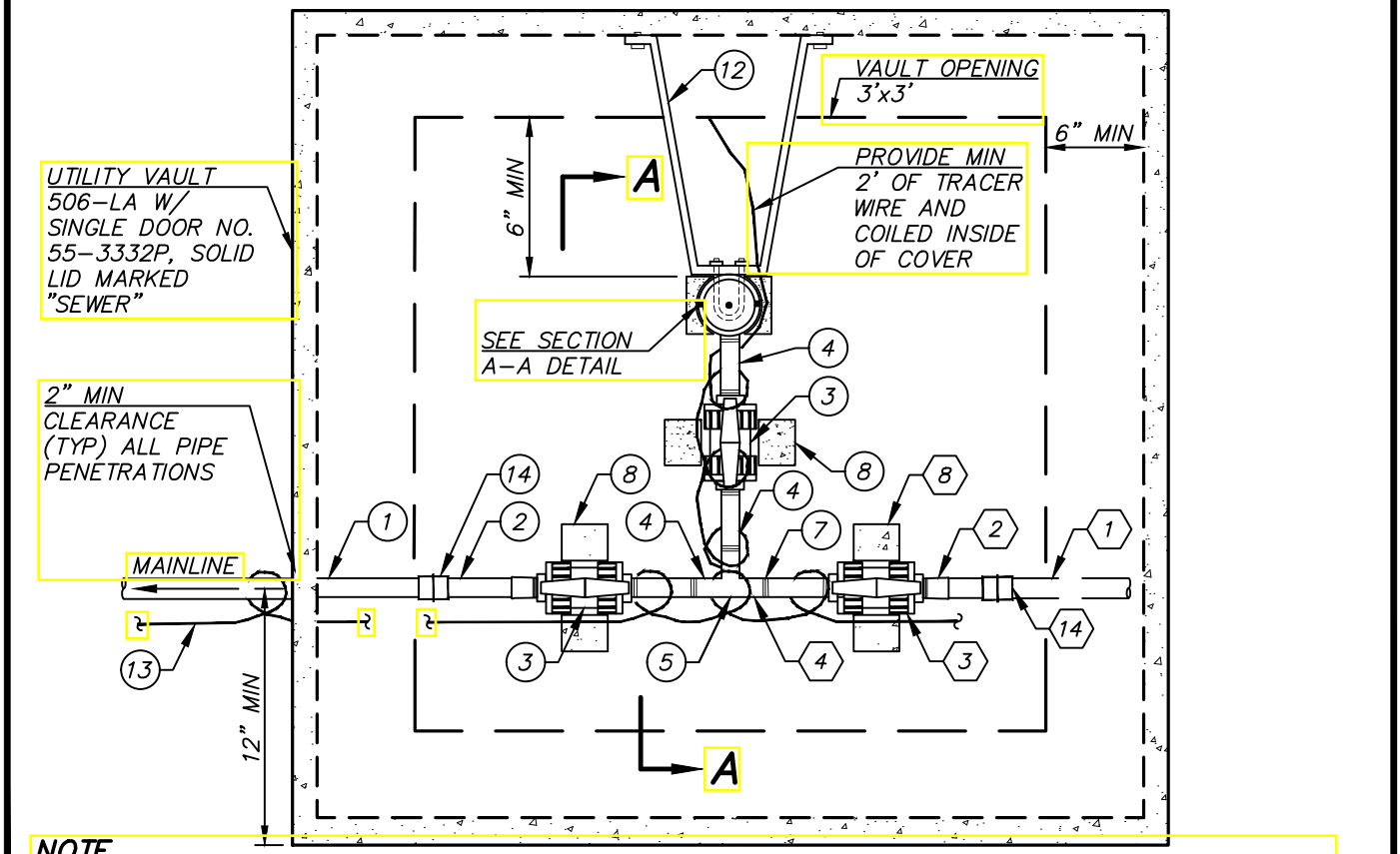

NOTE

1. MATERIAL LIST PROVIDED ON THE DETAIL TITLED LOW PRESSURE CLEANOUT NOTES AND MATERIAL LISTS.

REV. 10/19/17

TYPE I LOW PRESSURE CLEANOUT WITH MANHOLE (NON-TRAFFIC AREAS ONLY)

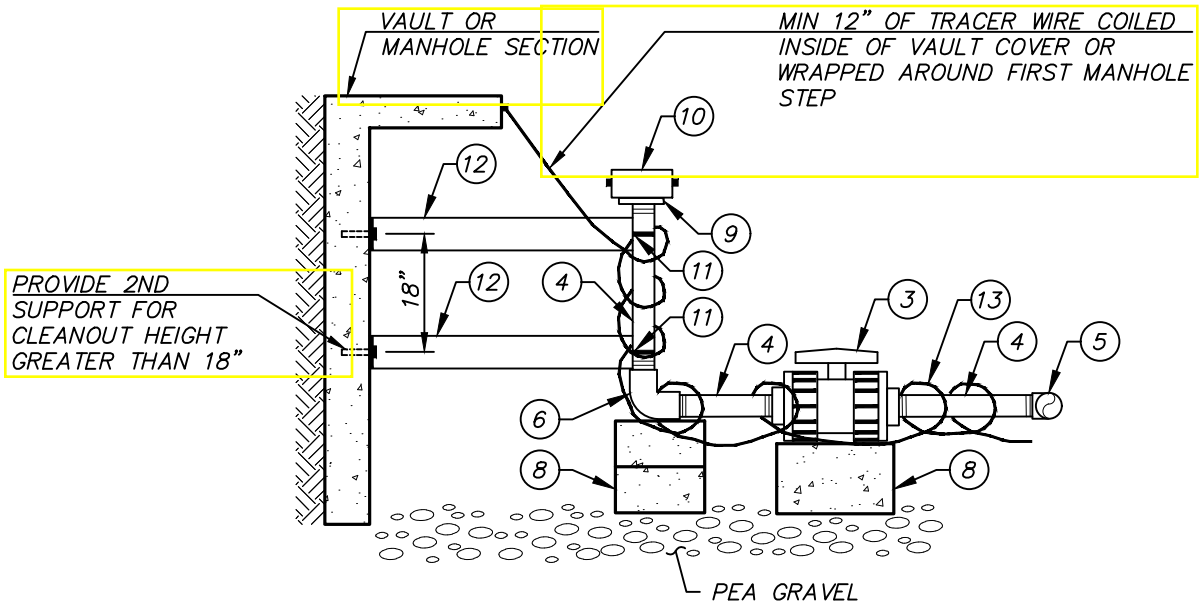

SECTION A-A FOR LOW PRESSURE CLEANOUTS

REV. 10/19/17

LOW PRESSURE CLEANOUT NOTES

1. THE PIPING SYSTEM INSTALLED IN A TYPE I AND TYPE II CLEAN OUT IS THE SAME. THE ONLY DIFFERENCE BETWEEN THE TWO TYPES IS A TYPE I REQUIRES A PRE-MANUFACTURED VAULT, WHILE A TYPE II REQUIRES A FLAT-TOP MANHOLE SECTION.
2. LOW PRESSURE CLEANOUTS SHALL BE INSTALLED AT A MINIMUM OF EVERY 500-FT AND AT THE END, OR TERMINUS, OF THE LOW PRESSURE SEWER MAIN.
3. THE MANHOLE SECTION AND/OR VAULT SHALL BE INSTALLED LEVEL AND SHALL DRAIN TO DAYLIGHT OR STORM SYSTEM. THE COVER AND/OR LID SHALL BE ADJUSTED TO GRADE.
4. WHERE THE CLEAN OUT IS INSTALLED AT THE TERMINUS OF A MAIN, THE PVC PLUG(ITEM 7) SHALL BE INSTALLED INTO THE END OF THE PVC TEE (ITEM 5), ALLOWING FOR FUTURE MAIN EXTENSIONS.

MATERIAL LIST

1. ALL PARTS SHALL BE THREADED PVC, SCHEDULE 80, WITH THE SAME DIAMETER AS THE SEWER MAIN (EXCEPT AS NOTED).

(X) MATERIALS REQUIRED FOR LOW PRESSURE CLEANOUT

⟨X⟩ MATERIALS REQUIRED FOR EXTENSION OF SEWER MAINLINE AS PART OF CURRENT OR FUTURE WORK

ITEM	ITEM NAME
1	HDPE PRESSURE PIPE SDR 11
2	HDPE x 316SS MPT TRANSITION FITTING, 6-INCH LENGTH (FULL BORE) DIAMETER SHALL BE SAME SIZE AS THE SEWER MAINLINE
3	UNION BALL VALVE, PVC
4	NIPPLE, PVC
5	TEE, PVC
6	90° ELBOW, PVC
7	PLUG, PVC (MIP)
8	CONCRETE BLOCK - (SIZE TO SUIT)
9	MIP X 2 1/2" MNST SWIVEL BRASS HOSE ADAPTOR (PROVIDE REDUCER AS REQUIRED)
10	2 1/2" FNST CAP W/CHAIN
11	ALUMINUM U-BOLTS BOLTED TO SUPPORTS WITH STAINLESS STEEL NUTS
12	1-1/2" X 3/16" ALUMINUM BAR, BENT AS SHOWN IN TYPE I CLEANOUT DETAIL AND ATTACHED TO CONCRETE WALL WITH STAINLESS STEEL ANCHOR BOLTS
13	TRACER WIRE, INSULATED 12-GAUGE SOLID CORE WIRE (WRAP TRACER WIRE AROUND ALL PIPES DURING INSTALLATION)
14	HDPE ELECTRO-FUSION SOCKET WELDED COUPLING

REV. 10/19/17

LOW PRESSURE CLEANOUT NOTES AND MATERIAL LIST

PART FIVE - DRAWING STANDARDS

5.1 GENERAL

A. Plan Set

1. All plans shall be ink on a reproducible mylar cut sheet, 22”x34” in size. The title block for each sheet shall include:
   a) Name of the project
   b) Owner/developer's name
   c) Address and telephone number
   d) Engineering firm's name, address and telephone number
   e) Date the drawings were prepared
   f) Dates and identification of any revisions to the drawings
   g) Page number of the sheet within the plan set
2. Each set of plans shall include a cover sheet unless the plans are shown completely on one sheet. The cover sheet (or single drawing sheet) shall include:
   a) Name of the project – if the improvements are being constructed as part of a larger development, the name and number of the division being constructed under this agreement and the name of the larger development shall be shown
   b) Plat name or Short Plat Number and the agency (County or City) who has jurisdiction over the development of the project
   c) Section, township, range, and existing King County tax parcel number(s) where the project is located
   d) Vicinity map
   e) List of drawings, including District standards
   f) North arrow and scale designation
   g) Datum used (1988 NAVD or latest District standard required) and benchmark location and elevation shall be surveyed at North American Vertical Datum of 1988 [NAVD 88]. Benchmark must be a known, registered benchmark by King County or the Cities of Sammamish or Issaquah. Assumed or surveyor set benchmarks will not be allowed. Elevations derived from as-built drawings or similar sources shall not be used as the basis for vertical control. The drawings shall be assigned the local projection of Washington State Plane North, NAD 1983 (HARN), US Feet.
   h) Legend of symbols used
   i) Identification of existing and proposed streets
   j) Seal and signature of the Professional Engineer responsible for the plan set

k) Signature box for the District's General Manager to sign and date the drawings, indicating District approval of the plans

l) Fire district in which the project is located

m) The following disclaimer: "Underground utilities are shown in the approximate location. There is no guarantee that all utility lines are shown, or that the location, size, and material is accurate. The Contractor shall uncover all indicated piping where crossing, interferences, or connections occur prior to trenching or excavation for any pipe or structures, to determine actual locations, size, and material. The Contractor shall make the appropriate provision for protection of said facilities. The Contractor shall notify ONE CALL at 1-800-424-5555 and arrange for field location of existing facilities before construction."

3. The set of drawings shall include:

   a) Erosion and sedimentation control plans

   b) Water and sewer facilities on separate drawings unless the requirement is waived by the District

   c) Location and general footprint of all buildings, shown with faded lines, with finished floor elevations for all floors

   d) All rockeries, fences, street trees, driveways, mailboxes, and other surface features, shown with faded lines

   e) Existing and finished grading (contour lines), shown with faded lines

   f) Symbols and font sizes conforming to the District drawing standards listed in Table 5.1.

4. Preliminary Plans sent for review may be provided on regular print paper.

B. Overall Drawing(s)

Where more than one sheet is required to cover all of the construction area, an overall drawing will be required. If the improvements being constructed are in a division of a larger development, the extent of the larger development shall be indicated.

The overall drawing(s) shall show the proposed location of water lines, valves, fire hydrants, blowoffs, sewer lines, manholes, cleanouts and other appurtenances. If the water and sewer plans are shown separately, separate overall drawings shall be provided for the water and sewer improvements.

The overall drawing shall be at a standard engineering scale. The overall drawing shall include the entire construction area. An index map shall be included, showing the sheet layout with associated page numbers, on the overall sheet.

TABLE 5-1

STANDARD DRAWING WATER SYMBOLS

SYMBOL EXISTING	SYMBOL PROPOSED	DESCRIPTION	(ABBREVIATION)
		CAP/PLUG	
		COUPLING	(CPL)
		GUARD POST	(GP)
		REDUCER	(RED)
		THRUST BLOCK	(TB)
		WATER METER	(WM)
		FIRE HYDRANT	(FH)
		FLANGE/BLIND FL	(FL)/(BL FL)
		MECHANICAL	(MJ)
		PUSH-ON/HUB	
		RESTRAINED JOINT	(RJ)
		AIR/VACUUM RELEASE VALVE	
		BLOW-OFF	(BO)
		BUTTERFLY	(BF)
		CHECK	(CK)
		GATE/GENERAL	(WV)
		PLUG VALVE	(PV)
		TEE	(TEE)
		BEND	(BND)
		CROSS	(X)
		PRESSURE REDUCING VALVE	(PRV)
		ZONE VALVE	
		WATER MAIN	

SYMBOLS SHOWN ON DRAWINGS SHALL BE AT LEAST THE SIZE SHOWN IN THIS TABLE, REGARDLESS OF DRAWING SCALE.

TABLE 5-1 (CONTINUED)

STANDARD DRAWING SEWER SYMBOLS

SYMBOL EXISTING	SYMBOL PROPOSED	DESCRIPTION (ABBREVIATION)
		SEWER CLEAN OUT (CO)
		SEWER MANHOLE (SSMH)
		SEWER COLLECTION VALVE BOX
		SEWER AIR/VACUUM RELEASE VALVE
		GREASE INTERCEPTOR/OIL WATER SEPERATOR
		GRINDER PUMP
		SEWER MAIN
		SEWER FORCE MAIN

SYMBOLS SHOWN ON DRAWINGS SHALL BE AT LEAST THE SIZE SHOWN IN THIS TABLE, REGARDLESS OF DRAWING SCALE.

C. District Standards Sheets

The latest issue and/or amendment of the District Standard sheets with standard notes and details, at the date of the Pre-Construction Meeting with the District, shall be incorporated in the Plan Set, and the numbering of the sheets shall reflect their inclusion.

D. Shop Drawings

Shop drawings, when required, shall be provided on the standard size and type sheet.

The Shop drawings may be at any scale that will adequately show the detail necessary for fabrication or construction of the piping, equipment, machinery, etc. depicted on the shop drawing.

5.2 WATER SYSTEMS

The water system design shall be a plan view, at a scale that clearly shows the facilities to be constructed (typically, 1”=20’ to 1”=30’). A smaller scale may be used if approved by the District. The design drawing shall show clearly the relationship of the water main to existing and proposed underground utilities as well as its relationship to street paving, curb, gutters and sidewalks. Water facilities drawings shall be separate from sewer facilities drawings unless combined drawings for simple designs are approved by the District.

A profile of the water system is required. The location of air/vacuum release valves shall be shown in profile. All other utility crossings shall be shown on the profile drawing. All new or proposed water improvements shall be depicted by a heavy solid line. All existing water improvements shall be depicted by a thin, dashed or faded line. The proposed sewer improvements shall be shown with faded lines on the water drawings. All existing sewer improvements shall be depicted by a thin, or faded dashed line. When showing existing water and sewer, and/or other existing and proposed underground utilities, care should be taken to clearly identify each line with unique letters or line types. The different lines should be shown in the drawing legend. If the District has approved combined water and sanitary sewer drawings, all new sewer shall be depicted by a heavy dashed line. Use the following nomenclature for identifying single ¾” water meters:

INSTALL 1” SERVICE LINE WITH SINGLE ¾” METER SETTER

For double ¾” water meters, use the following nomenclature:

INSTALL 1” SERVICE LINE WITH DOUBLE ¾” METER SETTER

Callouts for larger meters are similar.

All storm drainage facilities, existing or proposed, shall be shown with faded lines on the water and sewer drawings. In addition, the complete storm drainage improvement drawings shall be submitted for District review with the water and sewer drawings.

All valves, fire hydrants, fittings and other appurtenances shall be called out and fully located by stationing along centerline of street, or base line of easements, etc. The callouts shall indicate the line size and material. Fittings and appurtenances shall have indications of their size, type and connection type (i.e., flange or mechanical joint). Clusters of fittings and/or appurtenances shall be called out together.

Meter sizes and service line sizes shall be called out for all irrigation meters and domestic meters for multi-family/commercial/industrial developments. In single family residential developments, the service line size used for the lots shall be called out as noted above, and any locations where meters in excess of 3/4" are required shall be called out.

All drafted symbols, line work, and notes shall be completely legible on the final paper print. All notes shall be a minimum of 1/10th inch high (7 point font). Fonts shall be a plain, non-serif style, such as Arial. Shading or hatching in areas containing water improvements symbols, lines, or notes shall not be allowed.

Profile drawings are required by the District to show the relationship of the water line to finish grade, other underground utilities, crossings of railroad tracks, streets, rivers and drainage ditches, changes in the vertical alignment of the water line, and/or other places where it would clarify construction.

5.3 SEWER SYSTEMS

The design of the sewer system shall include both a plan and profile view. The Horizontal scale shall be a scale that clearly shows the facilities to be constructed (typically, 1”=20’ to 1”=30’), and the Vertical scale shall be 1”=5’ or 1”=10’. A smaller scale may be used if approved by the District. The design drawing shall show clearly the relationship of the sewer main to existing and proposed underground utilities, especially all storm drainage facilities, as well as its relationship to street paving, curb, gutters and sidewalks. The sewer line locations shall be dimensioned from the street centerline where possible. Sewer facilities drawings shall be separate from water facilities drawings unless combined drawings for simple designs are approved by the District.

All new or proposed sewer improvements shall be depicted by a heavy dashed line. All existing sewer improvements shall be depicted by a thin, dashed or faded line. The proposed water improvements shall be shown with faded lines on the sewer drawings. All existing water improvements shall be depicted by a thin, or faded solid line. When showing existing water and sewer, and/or other existing and proposed underground utilities, care should be taken to clearly identify each line with unique letters or line types. The different lines should be shown in the drawing legend. If the District has approved combined sanitary sewer and water drawings, all new water shall be depicted by a heavy solid line.

All storm drainage facilities, existing or proposed, shall be shown with faded lines on the water and sewer drawings. In addition, the storm drainage improvement drawings shall be submitted for District review with the water and sewer drawings.

All manholes, cleanouts and other appurtenances shall be clearly labeled in both plan and profile and shall be fully located by stationing along centerline of street, or base line of easements, etc. All invert elevations for each manhole shall be shown on both plan and profile views, together with a

designation for the size of pipe, direction entering/leaving the manhole, and IN or OUT. Profiles shall also include the size, length, slope and pipe classification for each run of pipe from manhole to manhole. Fittings and appurtenances shall have indications of their size, type and connection type. All crossings and conflicts with other utilities shall be shown in both plan and profile. The plans shall also indicate all necessary easements and improvements in the area of the sewer construction, or that would be affected by the construction shall also be shown.

If the finished floor elevation of the lowest sewered floor is below the rim elevation of the manhole upstream of where the building's side sewer connects to the main, a backwater valve is required by the Uniform Plumbing Code. Each drawing plan sheet that contains such a building shall include the following note:

> *The Uniform Plumbing Code requires backwater valves on building sewers where the finished floor is below the rim of the upstream manhole. Backwater valves, if they are installed, must be located upstream of the cleanout closest to the building. The District is not responsible for their installation, maintenance, or operation. The side sewer permit for a building with a backwater valve shall include a hold harmless clause which indemnifies the District against any liability, damage, or cost which may accrue from the installation and operation of a backwater valve in the side sewer.

Each building or lot whose finished floor elevation indicates the need for a backwater valve shall have a large asterisk (*) next to the building number or lot number as reference to the note.

All drafted symbols, line work, and notes shall be completely legible on the final paper print. All notes shall be a minimum of 1/10th inch high (7 point font). Fonts shall be a plain, non-serif style, such as Arial. Shading or hatching in areas containing sewer improvements symbols, lines, or notes shall not be allowed. It is preferred to have the plan and profile of each sewer from manhole to manhole shown on the same sheet with the same horizontal scale. When possible, the profiles shall be extended directly below or above the plan view. If including the plan and profile on the same sheet results in excessive fragmentation of the sewer plan view, profiles may be shown together on separate pages, clearly referencing the sheet number containing the plan view. Where profiles are shown on separate pages from the plan view, a horizontal scale of 1"=50' and a vertical scale of 1"=5' may be used for the profile.

5.4 AS-BUILT DRAWINGS

A. Project Field Drawings

The Developer/Contractor shall maintain, on the jobsite, project field plans marked to indicate District approved plan revisions made in the field and other details of construction. These changes and details of construction shall be provided to the Engineer of Record to include on the "As-Built" record drawings. All surface features of the water and sewer systems, together with the staked location of watermain bends, shall be field-surveyed by a Washington State licensed Surveyor during construction and the information used to prepare the As-Built drawings. The surveyed locations of all features shall be shown with an "X" on the draft as-built drawings superimposed on the water and sewer plans. (Point-Plot Map at the same scale as the as-built

drawings). The Developer's Engineer shall also submit to the District an electronic table of the surveyed points including identification number or description of the coordinates using the following projection: Horizontal: Washington State Plane North, North American Datum 1983/91, HARN, US Feet. Vertical Datum: NAVD 88. The Point-Plot Map and the draft as-built drawings shall be submitted electronically in addition to paper copies. The stationing, coordinates, callouts, and position of facilities shall be revised to represent the as-built location. If the original design drawings were prepared in digital format using AutoCAD or other automated drafting/design software, the revisions during construction shall be incorporated onto the as-built record drawings digitally. The drawings shall be on a minimum 4-mil mylar format, clearly marked in the lower right-hand corner as "As-Built". For manually-drafted drawings, if the "As-Built" record drawing is not on the original District Approved plan, a mylar of the original District approved plan shall also be provided. The Developer/Contractor's project field drawings shall be submitted to the District for review with the As-Built record drawings.

B. Changes in Street Names and/or Lot Lines/Numbers

If, during construction, street names, lot lines, and lot numbers were modified from those shown on the approved design drawings, the as-built drawings shall show the corrections. Street names shall match the names shown on the final plat certificate or similar document.

C. Plats and Short Plats

Plat drawings shall include the new tax lot numbers (10 digits) shown on the final plat certificate or similar document. Each lot may contain only the four (4) digit minor number. Short plat drawings shall include the short plat number.

D. As-Built Submittals

In addition to the as-built mylar drawings, the following shall be provided:

1. Copy of the recorded plat or short plat documents

2. Two (2) sets of full-size prints without District standards, plus one (1) full-size set of prints with District standards (for use at 11-month inspection)

3. One (1) sets of half-size prints (11"x17")

4. If the design was prepared using computer-aided drafting, provide (an) electronic file(s) containing the As-Built drawings. The electronic as-built drawing files shall be in a form compatible with AutoCAD Version 14 **or later** with the as-builts being assigned the local projection of Washington State Plane North, North American Datum 1983/91, HARN, US Feet and elevation Datum NAVD 88.

5. A single file containing all scanned images of the as-built drawings in Adobe's PDF format. PDF images shall be the full size of the original document.

E. Water System As-Built Details

The details of construction for water systems shall include, but not be limited to:

1. Bends - location of bends used, or deletion of bends shown on the plans and not used.

2. Meter boxes - changing the meter box location from one lot corner to another; measurements to meter boxes not located on lot corners from at least two permanent items such as catch basins, hydrants or manholes.

3. Service line locations - route the service line follows, if other than perpendicular to the street, from the main to the meter box. This is especially important in cul-de-sacs or bubbles.

4. Valves - The as-built location of all valves greater than 1 inch shall be shown.

5. Fittings - Any approved changes to the fitting callouts on the design plans should be noted.

6. Other Utilities - Crossings of other utilities and detailed locations of other utilities where they run parallel to the water main and are closer than 3 feet horizontally.

F. Sewer System As-Built Details

The details of construction for sewer systems shall include, but not be limited to, the items indicated below. Items 2 through 6 may be shown in a table on the drawing where the side sewers are shown.

1. Side sewer stubs - exact side sewer stub locations including all of the following measurements on each side sewer:

2. Distance from the downstream manhole to the side sewer tee.

3. Distance from the mainline to the wye (if double side sewer).

4. Distance from the wye to the ends of the six (6) inch stubs.

5. Perpendicular distance from the side property line to the end of the six (6) inch stubs.

6. Depth of the end of the stub below finished grade and invert elevation.

7. Manhole inverts - all inverts to be verified by survey.

8. Manhole locations in unpaved areas - the as-built location of all manholes shall be shown, as determined by surveying described above.

9. Cleanout locations in unpaved areas - the as-built location of all cleanouts shall be shown, as determined by surveying described above.

10. Fittings - any changes to the fitting callouts on the design plans should be noted.

11. Force main bends - location of bends used, or deletion of bends shown on the plans and not used.

12. Other utilities - crossings of other utilities and detailed locations of other utilities where they run parallel to the sewer main and are closer than 3 feet horizontally.

ANY CHANGES TO THE PLANS AS APPROVED SHOULD BE NOTED.

This page intentionally left blank.

PART TWO - MATERIAL STANDARDS

2.1 GENERAL

All materials and equipment shall be new and undamaged. Where possible, the same manufacturer of each item shall be used throughout the job. In accordance with paragraph WS-20 "Material and Equipment List" of this Agreement, the Developer or Contractor shall file a material and equipment list with the District including the quantity, manufacturer, model number and technical specifications, if applicable, of material and equipment to be installed as part of the work. If requested by the District, five (5) copies of all information concerning the specifications, installation, operation and maintenance of material and equipment installed as part of the work shall be furnished to the District in five separate labeled binders.

A. Foundation Gravel

Foundation gravel used for backfill of over-excavated trenches shall conform to the requirements of WSDOT/APWA 9-03.17, "Foundation Material, Class B."

B. Controlled Density Fill (CDF)

Controlled Density Fill (CDF) shall be a mixture of Portland cement (Type I or II), fly ash (ASTM C618, Class F), fine aggregates (coarse sand with 100% passing 3/8-inch sieve, 60-100% passing No. 4 sieve, and 0-5% passing No. 200 sieve), and water, with a maximum 28-day compressive strength of 100 psi, conforming to following proportions:

Material	Batch Weight/Cubic Yard
Mixing Water	50 lb/cu yd
Portland Cement	30 lb/cu yd
Fly Ash	200 lb/cu yd
Fine Aggregate	3200 lb/cu yd

Submit CDF mix design for District review prior to use.

C. Pea Gravel

Bedding material for PVC or HDPE pipe shall be well graded, clean granular gravel material commonly known as pea gravel. Material slightly smaller than pea gravel may be used.

Bedding material shall meet the following requirements:

U.S. STANDARD SIEVE SIZE	PERCENT PASSING
3/8" Square Opening	100%
No. 8 Sieve	0 - 5%

V. Sand Bedding Material

Bedding material for ductile iron pipe shall conform to the requirements of WSDOT/APWA 9-03.13, Backfill for Sand Drain".

W. Concrete Encasement

Concrete material for encasing water mains crossing over sewer pipes shall have a 30-day compressive strength of not less than 1,500 psi. The mix shall have a slump of between one (1) and five (5) inches.

X. Native Backfill Material

Native materials will be considered suitable for use in backfilling if the material is not sensitive to moisture (compactable if moisture content is greater than optimum). Native materials shall be a sand and gravel combination with no deleterious materials. All materials shall pass a 3-inch sieve.

Y. Imported Backfill Material

Durable crushed gravel or rock; or naturally occurring sands and gravels free from wood, bark, roots or other extraneous material, meeting the requirements of WSDOT/AWPA 9-03.19 for "Bank Run Gravel for Trench Backfill", with percent passing the No. 200 sieve limited to 5 percent max.

Z. Hot Mix Asphalt (HMA)

Hot Mix Asphalt (HMA) shall be CL ½" as specified in WSDOT/APWA Section 9-03.9(6) Aggregates for Hot Mix Asphalt, HMA Proportions of Materials, and Performance Graded PG 58-22. Aggregate for asphalt concrete shall conform to the requirements of WSDOT/APWA Sections 9-03.8(1) through 9-03.8(6) for Aggregates for Hot Mix Asphalt, inclusive.

AA. Crushed Surfacing

1. Top Course and Keystone Material (5/8" Minus): For use in the restoration of excavated areas. Top Course and Keystone material shall conform to the requirements of WSDOT/APWA 9-03.9(3), "Crushed Surfacing" for Top Course and Keystone.
2. Base Course Material (1 ¼" Minus): Base Course Material shall conform to the requirements of WSDOT/APWA 9-03.9(3), "Crushed Surfacing" for Base Course.

J. Not Used

K. 7/8-inch Drain Rock

Material for drains around facilities such as hydrants, blowoffs, and hill holders shall conform to the requirements of WSDOT/APWA 9-03.12(5), "Gravel Backfill for Drywells", except that the material shall be washed to remove fines.

L. Not Used

M. Grout

Grout shall consist of one part Portland Cement, three parts fine sand, and sufficient water to allow proper workability. "Jet-Set" is not allowed.

N. Trench Plug

Low permeable fill material, a non-dispersible clay material having a minimum plasticity index of 10.

O. Unsuitable Materials

1. Unsuitable materials include the materials listed below:

(a) Soils which, when classified under ASTM D 2487 - Standard Classification of Soils for Engineering Purposes (Unified Soil Classification System), fall in the classifications of Pt (Peat), OH (organic clays of medium to high plasticity, organic silts), CH (inorganic clays of high plasticity, fat clays), MH (inorganic silts, micaceous or diatomaceous fine sandy or silty soils, elastic silts), or OL (organic silts and organic silty clays of low plasticity). OH, CH, MH with liquid limits of greater than 50 and OL liquid limit less than 50.

(b) Soils which cannot be compacted sufficiently to achieve the density specified for the intended use or as determined by the District. Soil additives for drying or stabilization will not be allowed, including but not limited to fly ash, Portland cement, or kiln dust.

(c) Materials that contain organic material, hazardous or designated waste materials including petroleum hydrocarbons, pesticides, heavy metals, and any material which may be classified as hazardous or toxic according to applicable regulations.

(d) Soils that contain greater concentrations of chloride or sulfate ions, or have a soil resistively or pH less than the existing on-site soils.

P. Ductile Iron Pipe

Ductile Iron pipe shall be cement mortar-lined and zinc coating as specified herein unless otherwise indicated on the plans. Any pipe found to have dimensional tolerances in excess of those prescribed by the manufacturer or having defects which prevent adequate joint seal or any other damage shall be rejected. If requested by the District, not less than three nor more than five pipe lengths of pipe for each size, selected from stock by the District, shall be tested as specified for maximum dimensional tolerance of the respective pipe.

Ductile Iron pipe shall conform to AWWA Standard C151, Thickness Class 52 or as indicated on the Drawings. Pipe with cement mortar lining shall conform to AWWA C104. The exterior of Ductile Iron pipe shall be coated with a layer of arc-sprayed zinc per ISO 8179. The mass of the zinc applied shall be 200b/m². A finishing layer topcoat shall be applie to the zinc. The mean dry film thickness of the finishing layer shall not be less than 3 mils with a local minimum not less than 2 mils. The coating system shall conform in every respect to ISO 8179-1 "Ductile iron pipes- External zinc-based coating - Part 1: Metallic zinc with finishing layer" Second edition 2004-06-01 Ductile Iron pipe and fittings for sewer shall be lined with PROTECTO 401 ceramic epoxy coating (Manufacturer - Induron, Birmingham, Alabama (888) 773-2401). Joints shall be mechanical joint or push-on joint and shall conform to AWWA C111.

1. Ductile Iron and Cast Iron fittings shall conform to AWWA Standard C110. Mechanical or push-on joints shall conform to AWWA Standard C111. Flanged joints shall conform to ASA Standard B-16.1, Class 125 with ductile iron followers. All fittings shall be cement mortar lined in conformance with AWWA Standard C104.
2. Where required on the Drawings, restrained push-on joint pipe and fittings shall be provided. Restrained joint pipe shall conform to AWWA Standard C151, Thickness Class 52 or as indicated on the Drawings. Pipe shall have cement mortar lining conforming to AWWA C104. Push-on restrained joints shall conform to AWWA C111. Restrained joints shall be designed for a water working pressure of 350 psi for sizes 4_inch through 24_inch, 250 psi for sizes 30-inch through 48-inch, and 150 psi for sizes 54-inch through 64-inch. Submit type of restrained joint pipe to the District for approval.
3. Where fittings are called for on restrained joint pipes, mechanical joints with megalugs or Alpha fittings shall be used.
4. Ductile Iron pipe shall be polywrapped.
5. Ductile Iron pipe shall be furnished with factory-installed plugs in each end of each stick of pipe. Such plugs shall remain installed until the pipe is ready to be installed in the trench.

Q. Polywrap for Ductile Iron Pipe

Polywrap shall conform to ANSI/AWWA A21.5/C105 (See AWWA C600) for linear low-density polyethylene film. The inside surface of the polyethylene wrap to be in contact with the pipe exterior shall be infused with a blend of anti-microbial biocide to mitigate microbiogically influenced corrosion and volatile corrosion inhibitor to control galvanic corrosion.

R. PVC Pipe for Watermains

PVC pipe 4 inches or larger in diameter shall conform to AWWA C900, Class 150. PVC pipe for water service shall only be used where crossing the gas pipeline easement. The pipe shall conform to WSDOT/APWA 9-30.1(5).

S. PVC Pipe for Non-Pressure (Gravity) Sewers

PVC pipe for depths up to twenty (20) feet, and less than 14 inches in diameter shall conform to ASTM D3034 and shall be defined as flexible conduit. Joints shall conform to ASTM D3212 using a restrained rubber gasket conforming to ASTM F477. Fittings shall be injection molded tees . Saddles fastened to pipe with external bands are not acceptable on any new system.

PVC pipe used for depths twenty (20) feet and greater and less than 14 inches in diameter shall conform to AWWA specification C900, Class 150 (DR 18). Joints shall conform to ASTM D3139 with rubber gaskets meeting ASTM F477. Fittings shall be Class 150 injection molded tees, meeting the requirements of AWWA C-907 and ASTM D1784.

T. HDPE Pipe for Water Mains and Pressure Sewers

HDPE pipe for water mains and pressure sewers may be used in specific situations where Ductile Iron pipe is not appropriate or feasible. The use of HDPE requires written District approval. The specifications and class of the HDPE will be determined on a project-specific basis including such factors as working pressure.

U. C-905 PVC Pipe for Non-Pressure (Gravity) Sewers

C-905 PVC pipe may be considered for lines that are fourteen (14) inches and greater in diameter. Pipe shall conform to the requirements of AWWA C905 and Uni-B-11.

All pipe joints shall be rubber gasketed. Rubber gaskets shall conform to ASTM F477.

V. Gate Valves

1. Gate valves shall conform to AWWA C-515, be epoxy coated, resilient seated, have a non-rising stem, a minimum of 200 PSI working pressure unless otherwise specified, shall have a standard 2-inch operating nut, and the standard opening rotation shall be counter_clockwise.
2. Gate valves shall be used for all water mains less than 12 inches in diameter. Gate valves are allowed for wet taps.
3. Butterfly valves shall be installed on all water mains 12 inches and larger. Butterfly valves may require plugging for testing purposes.
4. Where called for on the plans, gate valves shall be used for sewers four (4) inches and larger.
5. Special valves and fittings shall be as specified on the plans.
6. Gate Valves shall be one of the following types, with stainless steel bolts:
   a) Mueller
   b) Kennedy M & H
   c) Clow
   d) US Pipe
   e) American Flow Control Series 25002-17
   f) AVK

W. Valve Boxes

Valve boxes shall be Cast Iron, 2 piece, suitable for installation required, equal to Olympic Foundry Company/APWA Valve Box VB045. Valve box lids shall fit snugly in the casting. Valve Box Lid shall be marked "WATER" for water facilities. Valve boxes shall be equal to Olympic Foundry 940 and marked "SEWER" for sewer facilities.

X. Valve Marker Posts

Valve marker posts shall be reinforced concrete posts, 4"x4" on one end and 4"x6" on the other end, and 42" long. Posts shall be equipped with 1.5" raised Cole brand numbers referencing distance to the valve to the nearest foot. Cole brand numbers shall be installed using waterproof Liquid Nails brand glue suitable for metal surfaces.

Y. Concrete Blocking

Concrete blocking shall be a 1:3:6 mix with a six-inch (6") maximum slump.

Z. Bolts In Piping

All bolts shall be new and shall be of the same type and quality of the pipe or fittings as supplied by the manufacturer. Bolts shall be in conformance with AWWA Standard C110.

AA. Flange Gaskets

Flange gaskets shall be Ring-type cloth insert rubber gaskets 1/16-inch thick equal to Rainbow or Durable Garlock. Gaskets shall cover the full face of flanged fitting ends.

BB. Flexible Coupling

Flexible couplings shall be cement-lined, Mechanical Joint, Ductile Iron long-pattern sleeves unless otherwise approved by the District.

CC. Galvanized Steel, Pipe And Fittings For Blowoffs And Air Vacuum Relief Valves

Galvanized steel pipe shall conform to ASTM A120-65, Schedule 40. Galvanized steel fittings shall be malleable galvanized.

2.2 WATER SYSTEMS

All water mains shall be cement-lined Ductile Iron as specified herein unless otherwise indicated on the Plans.

A. Butterfly Valves

Butterfly valves shall conform to AWWA C-504. Unless otherwise specified the valves shall be class 150, ductile iron, epoxy coated, stainless steel bolts, shaft seals shall be "O" ring type, the standard opening rotation shall be counter-clockwise and shall have a standard 2" operating nut.

1. Butterfly Valves shall be one of the following types:
   a) Mueller/ Pratt
   b) Kennedy M & H

B. Fire Hydrants

1. Fire hydrants shall be a dry-barrel, compression-type traffic model with a 5-1/4 inch main valve opening (MVO) with brass on brass or brass on stainless steel seating as specified for 36-inch trench, unless otherwise designated, flanged at ground line, 6 inch MJ connection with lugs suitable for rods; two 2-1/2 inch hose connections, National Standard Thread; pumper connection shall be a 4_inch Seattle Standard Thread 4.875 x 6 equipped with a five (5) inch, 125-5 Storz quick connect fitting, unless otherwise noted on the drawings or as required by the local fire department jurisdiction. Operating nut shall be 1-1/4 inch pentagon and shall open counter-clockwise. Hydrant shall be so constructed that the direction facing of pumper connection may be rotated to face the roadway. Hydrants shall comply with AWWA C502. Unless otherwise specified, hydrant shall be of dry barrel traffic type with break flange construction.
2. Hydrants shall be one of the following types:
   a) Dresser M&H 129-S
   b) Mueller A423 (Super Centurion 250)
   c) Clow Medallion
   d) American Darling B-62-B
   e) AVK Series 2780
   f) U.S. Pipe Sentinel 250

C. Tapping Sleeve And Valve Assembly

Where required by the District, tapping sleeves shall be Romac FTS 420 or JCM 412 , with fusion_bonded epoxy coating and Type 304 stainless steel fasteners. The gate valve shall conform to the requirements herein.

D. Corporation Stop

See Standard Details - Service Connections.

E. Service Saddle

See Standard Details - Service Connections.

F. Water Service Pipe

Water service pipe shall be DRISCOPLEX 5100 ULTRA-LINE or equal manufactured from a high density, extra high molecular weight pipe resin polyethylene defined by ASTM D3350 having a cell classification of 345564C as polyethylene type III, grade, PE4710. Pipe shall be Iron Pipe Size - ID ASTM D2239 - SIDR 7 and have a working pressure of 200 PSI at 73.4 degrees F. The polyethylene extrusion compound from which the PE pipe and tubing are extruded shall be made of virgin quality material. The polyethylene pipe or tubing shall be marked in accordance with ASTM D-2239 for IPS pipe sizes and carry the National Sanitation Foundation (NSF) seal of approval. See Standard Details for installation procedures.

G. Air and Vacuum Relief Valve Assemblies

Air and Vacuum Relief Valve assemblies shall be APCO No. 143-C, Crispin UL10 or District approved equal for one (1) inch assemblies and APCO No. 145-C, Crispin UL20 or District approved equal for two (2) inch assemblies, or approved equal, equipped with a brass plug on top service port, and shall conform to WSDOT/APWA 9-30.3(7).

H. Hydrant Guard Posts

Hydrant guard posts shall be reinforced concrete posts, 8"x8"x6' long, 8" diameter x 6' long, or 9" diameter x 6' long. The same size and type of guard posts shall be used around each hydrant.

2.3 SEWER SYSTEMS

A. Sewer Pipe and Appurtenances, Non-Pressure

Gravity sewer pipe shall be either PVC Pipe for Non-Pressure (Gravity) Sewer Service or PROTECTO 401 ceramic epoxy lined Ductile Iron pipe as specified herein. Pipes with slopes greater than or equal to twenty (20) percent shall be PROTECTO 401 ceramic epoxy lined Ductile Iron pipe or C-900 PVC. C-905 PVC pipe may be considered for lines which are fourteen (14) inches in diameter or greater.

B. Sewer Pipe and Appurtenances, Pressure

High pressure sewer pipe and appurtenances shall be Ductile Iron or HDPE pipe as specified herein.

C. Side Sewer Pipe, Non-Pressure

1. Gravity side sewer pipe shall conform to the requirements of the Sammamish Plateau Water and Sewer District "Side Sewer Regulations", latest edition.
2. New side sewer connections on an existing sewer main for a single connection (not in conjunction with a new development) shall conform to the requirements listed below.
   a. For existing D3034 PVC Sewer Main (less than 20 feet in depth), the side sewer connection shall be one of the following:
      - Cut-in PVC side sewer tee
      - Romac "SST" Stainless Steel Tapping Sleeve (w/ stainless steel flange), with FLxMJ adapter with PROTECTO 401 ceramic epoxy lining and gasket sized for D3034 PVC side sewer. Romac side sewer saddle, Model CB, is NOT allowed.
   b. For existing C900 PVC Sewer Main (20 feet or greater in depth), the side sewer connection shall be a cut-in tee of one of the following materials:
      - C900 PVC side sewer tee with a C900 side sewer up to the transition point to D3034 PVC
      - Epoxy-lined ductile iron tee with a C900 side sewer up to the transition point to 4-inch D3034 PVC
   c. For existing ductile iron Sewer Main (20 feet or greater in depth), the side sewer connection shall be a cut-in tee of epoxy-lined ductile iron, with a C900 side sewer up to the transition to 4-inch D3034 PVC or Romac "SST" Stainless Steel Tapping Sleeve (w/ stainless steel flange), with FLxMJ adapter with PROTECTO 401 ceramic epoxy lining.

D. Side Sewer Pipe, Pressure

Grinder pump side sewer pipe shall conform to the requirements of the Sammamish Plateau Water and Sewer District "Side Sewer Regulations", latest edition.

E. Low Pressure Mainline Sewer Pipe and Appurtenances

Low pressure mainline sewer pipe shall be either two (2) inch or three (3) inch diameter high-density polyethylene plastic pipe (HDPE SDR 11), conforming to the materials requirements in the Sammamish Plateau Water and Sewer District "Side Sewer Regulations", latest edition.

F. Manholes

Galvanized steel shall not be used in manholes. See Standard Details for material requirements for standard manholes and for deep manholes.

1. Cast Iron Frames and Covers

Cast Iron frames and covers shall conform to the Olympic Foundry Company No. MH 30A Traffic Type or equivalent marked "SEWER" in two (2) inch raised letters. Castings shall conform to the requirements of ASTM A 48, Class 30 and shall be free of porosity, shrink cavities, cold shuts, or cracks or any surface defects which would impair service ability. Repair or defects by welding, or by the use of "smooth-on" or similar material will not be permitted. Cover shall have a maximum of one hole, and a rubber plug per the Standard District Detail shall be installed in the hole.

Manholes located outside of public rights-of-way shall be equipped with a 3-bolt, lockdown cover. All movable parts shall be made of noncorrosive metals otherwise arranged to avoid possible binding. The locking frame and cover shall be Olympic Foundry Company No. MH 30 D/T Traffic Type or equivalent marked "SEWER" in two (2) inch raised letters.

Manhole covers in pedestrian or bike lane areas shall have low embossment lids.

All manholes rings and covers shall be machine finished or ground on seating surfaces so as to assure nonrocking fit in any position, and interchangeability. At the request of the District, there shall be made available at the foundry standard rings and standard covers for use by inspectors in testing fit and seating.

At the request of the District, there shall be made available at the foundry a testing device suitable for proving the capacity of the assembly to resist an uplift pressure on the lid equal to a 20-foot head.

All manhole frames and covers shall be identified by the name or symbol of the manufacturer. This identification shall be in a plainly visible location when the frame and cover is installed. In addition to the manufacturer's identification, the material shall be identified by the following "NOD" or "DUC" for nodular or ductile iron respectively. The manufacturer's identification and the material identification shall be adjacent to each other and shall be minimum 1/2 inch letters recessed to be flush with the adjacent surfaces.

2. Precast Manhole Components

Precast manhole components shall conform to ASTM C478 except as modified herein. Base section openings to receive pipe shall be circular and held to the minimum size practical to accommodate the pipe to be inserted to effectively seal the joint. Kor_n-Seal boots shall be used for all pipe penetrations. Connections shall conform to WSDOT/APWA 7-05.3. All manholes shall be channeled in the field. Pre_channeled manholes are not permitted.

Where the direction of future extensions from the manhole are known, a 2-foot stub and cap shall be installed in a Kor-n-Seal boot at that location and the manhole shall be channeled to receive the future flow. The 2-foot stub shall be removed and replaced when the future extension is installed.

Precast manhole elements shall be provided with steps and/or ladders such that the completed manhole will contain a continuous vertical ladder with rungs equally spaced at twelve (12) inches plus or minus 3/4 inch. The lowest rung shall be not more than sixteen (16) inches above the shelf, and the uppermost rung shall be not more than eighteen (18) inches below the street surface. Ladder rungs or handholds in the manhole neck area must be recessed 2 inches for improved clearance.

Joints between precast manhole elements shall be rubber gasketed with O-rings or approved equal conforming to AASHTO M198 and shall be grouted on the inside. Shop drawings of the joint design shall be submitted to the District for approval, prior to manufacture or purchase. Completed joints shall show no visible leakage and shall conform to the dimensional requirements of ASTM C478.

Drop manholes, wherever shown on the plans, shall conform in all respects to the requirements for standard manholes as specified above. Pipe and fitting materials shall be ductile iron and shall conform to the specifications for ductile iron pressure sewer main.

Standard precast cones shall provide an eccentric reduction from forty-eight (48) inches to twenty-four (24) inches and shall not be less than seventeen (17) inches in height. Precast cones shall conform to WSDOT/APWA 9-12.4.

3. Manhole Steps

Polypropylene plastic steps shall be a polypropylene plastic step injection molded around a 1/2 inch diameter ASTM A-615, Grade 60, steel reinforcing bar. Step dimensions and pattern shall conform to the WSDOT/APWA 7-03.5.

4. Ladders

Precast manhole base sections shall be provided with a ladder as shown in the Standard Details. Ladders shall be made of the same material as the steps installed in the manhole sections. All ladders shall be subject to approval by the District.

Ladders shall be installed so they are centered on the largest shelf of the manhole or as otherwise directed by the District.

5. Manhole Lining

The manhole into which a force main or low pressure mainline discharges shall be lined 5-9 mils of Tnemec Series 141 Epoxoline or Wasser Aeroshield. In addition, the two manholes downstream of that manhole shall be lined with Tnemec Series 141 Epoxoline or Wasser Aeroshield if installed as part of the same project.

Existing manholes downstream of the force main discharge shall be lined with a material resistant to hydrogen sulfide corrosion, such as Wasser Aeroshield or Tnemec Series 141 Epoxoline. Submit product information for District review.

G. Air And Vacuum Relief Valve Assemblies

Air and Vacuum Relief Valve assemblies, size 2-inch, shall be stainless steel ARI D-020 with flanged connection.

H. Cleanout Assemblies

Cleanout assemblies for private side sewers shall not be allowed in the right-of-way or in private access tracts. Cleanout assemblies shall be brought up to finished grade with a locking cleanout cover (Olympic Foundry No. M-1025, marked "SEWER"). See District Standard Detail.

REVISIONS	BY	DATE

Sammamish Plateau Water
1510 228th Avenue SE, Sammamish, WA 98075
425.392.6256 ▪ spwater.org

STANDARD MATERIALS AND CONSTRUCTION NOTES

DATE: 10/20/2017
DRAWN: JTF
CHECKED: NONE
JOB NO.

PART THREE - CONSTRUCTION STANDARDS

3.1 GENERAL

Except as otherwise noted herein, all work shall be done in accordance with the Plans and Specifications approved by the District and as recommended in the applicable American Water Works Association (AWWA) specifications and/or the latest edition of the Washington State Department of Transportation/American Public Works Association, Washington State Chapter (WSDOT/APWA) Standard Specifications for Road, Bridge, and Municipal Construction, and/or the 10 States Standards, and according to the recommendations of the material or equipment manufacturer. In the event of a conflict between the specifications herein, the District shall determine which specification controls. Work shall be done only by contractors licensed and bonded with the State of Washington and experienced in the installation of public water and/or sewer mains.

The District will strictly enforce the erosion and sedimentation control requirements of other agencies. These requirements include, but are not limited to, silt fencing, check dams, catch basin filtration, and removal of debris from sawcuts by appropriate methods such as vacuuming.

Temporary lot numbers, addresses, or building numbers shall be clearly marked on the curb. These numbers are used by the District for side sewer inspections and water meter installations.

No work shall be done until all necessary permits have been received from the agencies having authority.

A preconstruction conference and a minimum of 48-hours notice will be required prior to starting construction.

Inspection shall be by a representative of the Sammamish Plateau Water and Sewer District. All work shall be inspected prior to backfill. All pressure testing shall be done in the presence of the District. The Contractor shall supply all equipment and materials necessary for testing.

ANY APPROVED CHANGES TO THE PLANS AS APPROVED SHALL BE NOTED ON THE CONTRACTOR'S CONSTRUCTION DRAWINGS. THE CONTRACTOR'S MARKUPS SHALL BE PROVIDED TO THE DISTRICT AT THE COMPLETION OF CONSTRUCTION.

All locations of existing utilities shown are approximate and it shall be the Contractor's responsibility to verify the true and correct location so as to avoid damage or disturbance. Separations from potable water mains shall conform to Washington State Department of Ecology's "Criteria for Sewage Works Design".

Separation Between Other Utilities:

Water - in accordance with criteria set forth in DOE guidelines

Storm Sewer - Three (3) foot horizontal clearance

Underground Power, Gas, Telephone and Cable - Three (3) foot horizontal clearance is preferred when utilities are aligned parallel to the water main. In any case where less than three (3) foot separation occurs, exact measurements to the utility lines shall be provided on the As_Built drawings.

Horizontal distances on construction drawings are measured between centerlines (e.g., centerlines of water fittings, centerlines of sewer manholes, etc.). Actual distances shall be computed at the time of staking.

Pipes Entering Structures - A flexible fitting shall be placed on all lines entering/exiting vaults or other structures, shall be located outside of the structure, and shall be located within five (5) feet of the structure. The flexible fitting shall provide protection from earthquake shaking by providing a point where the difference in vibration rates of the pipe and the structure can be absorbed. For watermains, for example, the fitting shall be a mechanical joint ductile iron sleeve, unless a mechanical joint bell connection occurs within 5 feet of the structure, outside of the structure, in which case the flexible fitting may be omitted.

Repaving shall be in accordance with the requirements of the agency having jurisdiction over the area to be paved. Monuments shall be restored by a Washington State licensed surveyor following completion of the overlay. Monument cases shall conform to King County standards; monument cases of other agencies (such as Snohomish County monument cases) will not be allowed.

A. Alignment

Unless otherwise specified, the location of the water mains, sewer mains, fittings, manholes and other appurtenances shall be staked out by a Washington State licensed surveyor supplied by the Developer/Contractor.

Contractor shall provide survey and layout required to perform the work. In all questions arising as to proper location of lines and grades, the District decision will be final. Cuts to invert of watermain and sewer main shall be shown on staking along with finish grade elevations. Deviations from the alignment shown on the plans must be specifically authorized by the District.

The Contractor's Washington State licensed surveyor shall place offset wood hubs (in soil) and/or steel pins (in asphalt or concrete) showing finished grade and cut depth to invert periodically (at least every 100 feet) along the pipeline alignment, and before and at all changes in alignment vertically or horizontally. Hubs/pins shall be placed far enough in advance of such alignment changes so that the manufacturers and specified deflections can be met. Hubs/pins shall be placed and marked for fittings and provide the District with a cut sheet containing the location, description, and elevation information for all hubs and pins. The Washington State licensed surveyor shall survey the installed invert elevation at the bell end of each piece of pipe and shall provide the District with a cut sheet of the invert elevations.

B. Trench Excavation

Trench excavation shall be in compliance with OSHA and WISHA regulations and requirements and shall meet the following requirements unless otherwise directed by the District or otherwise shown on the District-approved Plans.

Trenches shall be excavated to the line, depth and grade as approved by the District. Unless otherwise directed by Contract Documents or the District, trench excavation shall provide a minimum cover over the pipe of thirty-six (36) inches for water mains, forty-eight (48) inches for sewer mains, or as required to meet the depth requirements of sanitary sewer manholes or other necessary structures. Trench sides shall be excavated vertically. Trench widths shall be adequate for proper working space and the placement of any required bedding material under and around the pipe. The maximum trench width at the crown of the pipe shall be the outside diameter of the pipe barrel plus twenty-four (24) inches. For eighteen (18) inch diameter or larger pipe, the trench width at the crown of the pipe shall not exceed 1.5 times the inside diameter. If these widths are exceeded, a stronger grade of pipe and/or a higher classification and amount of bedding material shall be furnished, as directed by the District. Excavation for manholes or other structures shall be sufficient to provide a minimum of twelve (12) inches between their outer surfaces and the sides of the excavation.

The trench shall be kept free from water until jointing is complete. Surface water shall be diverted so as not to enter the trench. The Contractor shall maintain sufficient pumping equipment on the job to insure that these provisions are carried out. Gravel required in the bottom of the trench due to action of weather or workers shall be furnished by the Contractor. Boulders, rocks, logs, roots and other obstructions shall be entirely removed or cut out to the width of the trench and to a depth six (6) inches below pipe. Where material is removed from below grade, the trench shall be backfilled to grade with material which meets the District's standards for trench foundation gravel, and thoroughly compacted. Trenching operations shall not proceed more than 100 feet in advance of pipe laying.

If the native trench bottoms will provide a firm base for the subsequent placement of bedding, pipe and backfill, such native trench bottom may be used if the bottom is leveled and smoothed so that the entire length of pipe will rest on a well compacted base.

Trench bottoms shall be over-excavated as necessary to remove all unstable soil and eliminate "boiling" or "quick" conditions to such a depth as to provide a firm base. Over_excavated materials shall be replaced with trench foundation gravel as directed by the District. Trench foundation gravel shall be placed in no more than one foot lifts. When trenching operations cut through concrete or asphalt pavement, the pavement shall be removed to a width of eighteen (18) inches greater than the top width of the trench. The concrete shall be cut on a straight line. Asphalt paving shall be cut ahead of the trenching equipment to prevent excessive tearing up on the surfacing and to eliminate ragged edges.

C. Timbering and Sheeting

The Developer and/or Contractor shall provide and install timbering and sheeting as necessary to protect workers, the work, existing buildings, utilities and other properties. All timbering and sheeting above the pipe shall be removed prior to backfilling. All sheeting below the top of the pipe shall be cut off and left in place. Removal of timbering shall be accomplished in such a manner that there will be no damage to the work or to other properties. All timbering and sheeting shall be to the Developer's design and shall meet all requirements as specified by OSHA and WISHA.

D. Pipe Laying

Each gravity sewer pipe shall be laid with bells upgrade and the invert of the pipe to the alignment and grade shown on the plans. Concentric joints shall be closed and a smooth invert provided.

Open ends of pipe or fittings shall be temporarily capped or plugged at all times.

A laser alignment tool shall utilized for alignment and be capable of self-leveling adjustable line and grade with locking features. The tool shall be inserted into the pipe with a Class IIIA < 5.0mW Laser Diode. For gravity sewers, adjustment to the line and grade shall be done by scraping away or filling in and tamping bedding material under the body of the pipe. No wedging or blocking of the pipe for adjustment to line and grade may be done.

Tees, wyes, elbows, valves, cleanouts, and other appurtenances shall be installed as shown in the standard details herein and at such locations as are shown on the plans or as otherwise directed by the District, and shall not be covered until the District has completed inspection and exact location has been recorded on the project field plan drawings by the Contractor.

For gravity sewers, variance from established line and grade shall not be greater than 1/32nd of an inch per inch of pipe diameter, but shall not exceed ½ inch or result in a level or reverse sloping invert. Variation in the invert elevation between adjoining ends of pipe due to non-concentricity of joining surface and pipe interior surfaces shall not exceed 1/64th of an inch per inch of pipe diameter or ½ inch in any event.

For sewers, the furthest downstream manhole shall be plugged in the downstream side and remain plugged throughout the period of construction, until final acceptance of the project by the District, to prevent debris and/or infiltration from entering the District system.

1. Ductile Iron Pipe

Pipe laying shall in general conform to AWWA Standard C600 and the manufacturer's recommendations unless specifically contradicted by these Specifications. Special care shall be taken in handling pipe to avoid damaging ends, coatings and linings. Pipe shall be carried in slings and shall not be rolled or dragged. The pipe shall be examined for defects and damage while suspended before lowering into trench. Any damage shall be repaired before pipe is lowered into trench. All pipe shall be poly-wrapped in accordance with AWWA C600. Special care shall be taken to avoid damaging the polywrap during installation and backfilling.

2. PVC Pipe

PVC pipe shall be bedded by hand with material containing no organic matter and no rocks larger than 3/4". When in the opinion of the District the native material will not meet this requirement, the District may require that bedding material be imported that meets the WSDOT/APWA classification of bedding material, Section 9-03.16. Pipe shall not be dropped or handled roughly and shall be checked for cracks and defects prior to installation. Any cracked or defective pipe shall not be installed.

3. HDPE (Low Pressure Mainline) Sewer Pipe

HDPE pipe shall meet the installation requirements for PVC pipe. Joints shall be flanged or thermal fusion butt-welded and shall meet the requirements in the District's "Side Sewer Regulations", latest edition. Tracer wire shall be installed with the low pressure mainline to its termination point. A minimum of three (3) feet and a maximum of six (6) feet of cover shall be provided.

4. Contamination Prevention

All pipe, fittings, and valves shall be carefully cleaned of all dirt and foreign materials as they are placed. The open ends of pipe and fittings shall be plugged with a temporary watertight plug at all times. Groundwater shall be prevented from entering the pipe at all times.

E. Pipe Joints

No joints shall be covered until examined and approved by the District. Joint material shall be installed according to the manufacturer's recommendations.

The pipe shall be properly aligned before the joint is forced home. During insertion of the tongue or spigot the pipe shall be partially supported by hand, sling or crane as required to minimize lateral pressure on the gasket and to maintain concentricity until the gasket is properly positioned. Pipe deflection and straightening shall be avoided once the joint is home, to prevent creep of the joint. Pipe must be constructed upslope.

Pressure shall be applied in making the joint to assure that the joint is home, as defined in the pipe manufacturer's standard instructions for installation. Restraint shall be applied to the line to assure the joints, once home, are held so by tamping fill under and alongside the pipe or by other appropriate means. When pipe laying is not in progress, the last pipe laid shall be plugged and blocked in such a manner as may be required to prevent water and debris from entering the pipe and creep during downtime.

F. Bedding Material Placement

Bedding material shall be placed from a minimum of six (6) inches below the pipe barrel to six (6) inches over the top of the pipe as shown on the standard details herein. Bedding material shall be placed before the pipe is installed and shall be spread smoothly so that the pipe is uniformly supported along the barrel. Subsequent lifts of not more than six (6) inch thickness shall be placed to six (6) inches over the crown on the pipe and individually compacted to 90% of maximum density.

Removal of shoring or moveable trench shields or boxes shall be accomplished so that the bedding material placement is not disturbed.

In solid rock excavation, all ledge rock, boulders or stones shall be removed to provide a minimum clearance of eight (8) inches under the pipe. All material thus removed shall be replaced with bedding material.

G. Backfilling

No backfilling shall be performed until after the District has inspected the installation of the pipe and approved backfilling.

Native material that meets the requirements of Imported Backfill may be used for trench backfill upon approval by the District. In addition, 100% import backfill will be required for trench backfill during the wet season from October 1 to April 30.

Backfill material shall be moisture-conditioned as necessary to achieve the required compaction as described herein.

Fill and backfill materials to be placed within 6 inches of any structure or pipe shall be free of rocks or unbroken masses of earth materials having a maximum dimension larger than 3 inches. Backfilling shall be performed carefully so that no damage is done to the pipe or to its alignment. The District may direct the contractor to use special backfill techniques when it deems necessary.

Fill, backfill materials shall be selected or processed clean, fine earth, rock, or sand, free from grass, roots, brush, or other vegetation and organic materials. In areas such as existing paving, or in areas to be paved, where the District determines that minor settlement would be detrimental and the native excavated material is not suitable for compaction as backfill, the trench shall be backfilled with Imported Backfill material.

Materials not defined as unsuitable in Part Two - Material Standards are defined as suitable materials and may be used in fills, backfilling, and embankment construction subject to the indicated limitations. Suitable materials may be obtained from on-site excavations, may be processed on-site materials, or may be imported. If imported materials are required to meet the quantity requirements for the project, imported materials shall conform to the suitable material standards herein. Suitable materials are defined in Part Two - Material Standards.

All trenches shall be fully backfilled at the end of each day or, in lieu thereof, shall be covered by heavy steel plates adequately braced and capable of supporting vehicular traffic in those locations where it is impractical to backfill at the end of each day at the District's discretion. Backfilling operations shall not follow more than 100 feet from pipe laying operations. The above requirements for backfilling or use of steel plate will be waived in cases where the trench is located further than 100 feet from any traveled roadway or occupied structure. In such cases, however, barricades and warning lights meeting applicable safety requirements shall be provided and maintained. All street crossings shall be backfilled with 1 1/4" crushed rock or as otherwise required by the District, or Local Agency (City/King County).

The pipe zone is defined as that portion of the vertical trench cross-section lying between a plane below the bottom surface of the pipe and a plane at a point above the top surface of the pipe as identified on the standard trench section detail. The bedding is defined as that portion of pipe zone backfill material between the trench subgrade and the bottom of the pipe.

Backfill material shall be placed and compacted around and under the pipelines by hand tools, unless otherwise approved by the District, to a height of six (6) inches above the top of the pipe.

The pipe zone shall be backfilled with suitable backfill material as described herein. Care shall be exercised to prevent damage to the pipeline coating, cathodic bonds, and the pipe itself during the installation and backfill operations. If a moveable trench shield is used during backfill operations the shield shall be lifted to a location above each layer of backfill material prior to compaction of the layer. The pipe or backfill shall not be displaced while the shield is being moved.

Backfill material around another utility crossing the water or sewer trench, such as gas, power, and fiber optic, shall comply with the backfill material requirements of that utility.

After the pipe zone backfills have been placed, backfilling of the trench zone may proceed. The trench zone is defined as that portion of the vertical trench cross-section lying as indicated between a plane above the top surface of the pipe and a plane at a point 18 inches below the finished surface grade, or if the trench is under pavement, 18 inches below the roadway subgrade.

Final backfill is all backfill in the trench cross-sectional area within 18 inches of finished grade, or if the trench is under pavement, all backfill within 18 inches of the roadway subgrade.

In addition, all backfill in right-of-way shall meet King County Road Standards, latest edition or appropriate governing authority's requirements.

The remaining backfill material shall be placed and compacted in layers not more than twelve (12) inches thick (two feet loose thickness), except that under roadways all backfill material shall be placed in layers not more than six (6) inches thick and mechanically compacted to the density of the existing subgrade, unless state or county requirements are more stringent. All backfill shall be compacted to 95 percent of maximum density (modified Proctor), unless otherwise directed by the District.

Where compaction densities are specified, measurements of density shall be by the modified AASHTO method. The District may require that an independent laboratory or King County Laboratory be employed to perform in-place density tests as proof of compaction which meets these Specifications. Compaction of native material as trench backfill shall be tested and certified by an independent laboratory. All costs shall be borne by the Developer. At its discretion, the District may request supply samples for testing of any material used in the work.

All test trenches and excavations including excavation, trench support, and groundwater removal for the field soils testing operations shall be provided as required by the District. The trenches and excavations shall be provided at the locations and to the depths required by the District. Lawn areas destroyed by test trenching and excavation shall be regraded and re-landscaped with sod or hydro seeding as directed by the District.

Compaction testing shall be performed at a frequency of every five feet of depth and every 50 feet or with any changes in soils conditions, equipment, or operator personnel, or as directed by the District.

Regardless of the approval of the District as to manner of compaction, testing, acceptance by the District or otherwise, the Contractor/Developer shall repair any settlement of trenches and excavations that may occur within one year after completion and acceptance of the work by the District.

All pavement trench repair shall be provided in accordance with WSDOT/APWA 5-04.3(5)E and joints, surface smoothness and other related pavement construction shall be provided as specified in WSDOT/APWA 5.04, or as directed by the District.

H. Grade Lines

The contractor shall maintain the correct grades of sewer pipes. All bench marks, reference points and stakes shall be preserved and, in case of destruction of any of them, the resulting expense of restoration shall be borne by the Developer. Laser beam equipment for grade and alignment control shall be required.

I. Boring and Casing

In situations where the pipeline is to be bored, the pipeline shall be placed inside a casing. The casing pipe shall be smooth steel, bare pipe, 0.375 inch minimum wall thickness, and comply with ASTM A139, Grade C, with a minimum steel yield of 36,000 psi. To support the pipe inside the casing, pipe slides, casing spacers or 4" x 4" treated timbers with stainless steel straps shall be used to maintain vertical and horizontal alignment. After installation of the pipe in the casing is complete, the casing void shall be filled with sand or grout and the ends of the casing shall be grouted.

J. Pipe in Fills

Special treatment may be required at the discretion of the District for pipe in fills. This treatment may consist of compacting the backfill in 6-inch layers, careful choice of backfill materials, use of ductile iron pipe in short lengths, or such other reasonable methods or combinations as may be necessary in the opinion of the District.

K. Highway Crossings

This item applies only to rigid surface pavements. The Developer may use any method which provides satisfactory results and is acceptable to the governmental agency having control of the road and to the District, provided that the Developer restores the roadway to its original condition. Normally, highway crossings require the placing of a steel casing by jacking, tunneling or boring and laying the pipeline within this casing. In case of tunneling, subsequent low pressure grouting through the pavement may be required.

L. Valve Installation

Before installation, valves shall be cleaned of all foreign material as hereinbefore specified for installation of pipe. Such blocking as the District may deem necessary shall be provided.

M. Valve Box Installation

The valve box shall be set centered on the valve operating nut. Valve boxes shall be set flush in pavement. In gravel roads the valve box shall be set in a three (3) foot diameter circular pad of two (2) inch thick asphalt, flush with the gravel surface. Installation of pavers or slip cans to adjust valve boxes to finished grade is not allowed.

N. Valve Marker Posts

Valve marker posts shall be set where required by the District for all valves outside of paved roads, except auxiliary valves for hydrants and Type I blowoffs. The marker shall be set on a line through the valve. The marker shall generally be set on the property line unless the District decides another location is safer or more conspicuous.

O. Concrete Blocking

Concrete blocking with specified material shall be cast in place and have a minimum of 1/4 square foot bearing against the fitting and bearing area against undisturbed soil as shown on the District's Standard Details. Additional bearing area may be required by the District. Blocking shall bear against fittings only and shall be clear of joints so as to permit taking up or dismantling joints. All fire hydrants, bends, tees and valves shall be blocked. All sewer force main bends and valves shall be blocked. The Developer/Contractor shall install blocking which is adequate to withstand full test pressure as well as to continuously stand operating pressures under all conditions of service.

P. Air and Vacuum Release Valve Installation

Location of the air release valves as shown on the Plans is approximate. The installation shall be set at the high point of the line.

Q. Access Roads

Access roads shall be used only where the use of public or private roads to which the District has access is infeasible or unavailable. Use of access roads to water and sewer facilities must be approved by the District. The road surfacing shall be appropriate to the neighborhood (such as gravel, grass-crete, paving, cobblestones, etc.). At a minimum, access roads shall be twelve (12) feet wide designed for H-20 loading, with a minimum of two-and-a-half (2-1/2) inches crushed surfacing base course and one-and-a-half (1-1/2) inches crushed surfacing top course, as defined in WSDOT/APWA Section 9-03.9(3), over a District-approved subgrade compacted to 95 percent relative compaction, unless otherwise approved by the District.

Turnarounds shall be provided at all dead ends, either a hammerhead type with forty_five (45) foot long legs and forty (43) foot inside radii, or circular with a diameter of eighty-five (85) feet. The maximum road grade for gravel access roads shall be 7 percent (7%). If the road grade is greater than seven percent, the access road surfacing shall be paved with asphalt concrete pavement.

R. Painting

1. Exposed parts above ground shall be painted as follows:

a) Fire hydrants shall be painted with two coats of semi-gloss quick set enamel. The color shall be Safety Yellow.

b) Hydrant posts, type I blowoff assemblies, water air/vacuum assemblies for water mains and water valve markers shall be painted with two coats of semi-gloss quick set enamel. The color shall be Safety Yellow.

c) Distance to valves shall be marked with raised Cole numbers on the valve marker, blowoff stem, air vacuum assembly stem or Hydrant. Apply numbers with waterproof Liquid Nail.

d) Sewer air/vacuum release valve vents shall be painted with two coats of semi-gloss quick set enamel. The color shall be Safety Green.

2. Piping and Appurtenances within Structures:

a) Water Facilities: One (1) rust resistor prime coat and two (2) coats of semi-gloss quick set enamel. The color shall be Safety Blue.

b) Sewer Facilities: One (1) rust resistor prime coat and two (2) coats of semi-gloss quick set enamel. The color shall be Safety Green.

3. Vaults:

The exterior of vaults below grade shall be painted with two (2) coats of black bitumastic solution.

4. Meter Box Location stripes:

Meter Box Location stripes (3 in. x 12 in.) shall be painted with two coats of semi-gloss, quick set enamel. The color shall be Safety Yellow.

5. Sewer Air/Vacuum Release Valve Vents:

Two coats of semi-gloss quick set enamel. The color shall be Safety Green.

S. Raising Structures to Grade

The Developer/Contractor shall notify the District prior to raising any water or sewer system structures to grade. All water or sewer system structures (i.e. valves, manholes, clean-outs, monuments, etc) shall be raised within 48 hours of installation of ATB or Asphalt Concrete overlay unless directed by the District to raise said structures sooner.

3.2 WATER SYSTEMS

All water mains shall have a minimum cover of 36 inches below finished grade. Where utility conflicts occur, water mains shall be lowered to clear, except that water mains may not be installed under sewer facilities.

Where more than one fitting occurs in close proximity to each other (i.e., a tee and a valve), the fittings shall be flanged together.

A. Fire Hydrant Installation

Hydrant installation shall generally conform to AWWA Standard C600 unless specifically contradicted by the detail for Fire Hydrant Assembly included in the District's Standard Details. In addition, the fire hydrant run shall be installed with District approved restrained joints. The concrete guard posts as shown on the Standard Detail shall be installed where required by the District. Pumper nozzle shall face the road after installation is completed, unless otherwise specified. Hydrants shall be covered with a bag until operational.

No fences, rockeries, trees, or guardrails shall be installed between the fire hydrant and the main. A minimum of five (5) feet clear zone shall be provided between the fire hydrant and any rockery or structure.

B. Water Service Connections

Connections shall be installed with double strap type pipe saddle that uses stainless steel straps.

Installation shall be as shown in the District Standard Details. Splices or couplings in service lines will not be acceptable.

Draining the water system to install the meter setters will not be allowed. Water services shall be installed so that filings/shavings are removed

C. Meter Box Installations

Meter boxes shall be installed only in unimproved or landscaped areas not subjected to driving or parking. In unimproved or landscaped areas, meter boxes shall be set two (2) inches above the finished grade, including landscaping or mulch. Meter boxes shall be centered over the meter setter(s).

The area surrounding meter boxes shall be backfilled with backfill material conforming to Part 2.1 F (Native Backfill Material) or 2.1 G (Import Backfill Material). Maximum size particle shall be 2 inches. Sand or pea gravel shall NOT be used.

If paved or concrete areas are installed around meter boxes after the meter box is installed, the water service shall be abandoned at the main and a new water service shall be installed perpendicular to the main so that the new meter box is located in an unimproved area not subject to traffic.

Meter boxes may be located in or near driveways or paved areas only with written District approval, or as required by the District. Such meter boxes shall be traffic-bearing boxes as specified on the Standard Details. Meter boxes shall be set flush with concrete or asphalt surfaces (roadway, sidewalk, driveways, driving or parking surfaces, etc.).

When the meter box is installed in concrete paving, a 5/8-inch expansion joint shall be provided around the box with a eighteen (18) inch gap between the expansion joint and meter box on all sides.

Install a water meter marker post at the meter box location until landscaping is completed.

A twelve (12) inch by three (3) inch stripe shall be painted on the ATB or finished asphalt, perpendicular to the edge of the asphalt, to mark the location of each meter box. The color of the stripe shall be as per section 3-1.R(4) "Painting".

No fences, rockeries, trees, or guardrails shall be installed between the meter box and the main.

D. Backflow Prevention (Cross Connection Control)

Where the possibility of contamination of the water supply exists, the District will require that certain services be equipped with a backflow prevention assembly that is approved by DOH. The determination as to the need of a backflow prevention assembly shall be solely determined by the District.

Pursuant to Washington State Regulation WAC 246-290-490 and current District Resolution regulating the District's Cross Connection Program, the District shall receive a Backflow Prevention Assembly Test Report performed by a certified Washington State Tester, prior to acceptance of the system by the District.

Any transfer of water from a District water main to a vehicle or container must have District inspection and approval as to the method and equipment.

Any use of District water for construction purposes must be from a hydrant or other District-approved source with appropriate, District-approved cross connection control. District personnel will inspect the installation for conformance with District requirements.

E. Connections To Existing Water Mains

District standard testing connections shall be installed on new water main construction. Direct connection to the District's existing system shall not be made until the new water main is tested and accepted by the District. Following receipt of satisfactory purity tests, schedule with District (1 week minimum notice) for water main shutdowns. Following completion of new water system construction, testing, and acceptance by the District, remove testing connection and install segment of ductile iron pipe, length to suit, with two long-pattern sleeves or as directed on the District-approved drawings. Installation and connection to the existing water system shall be with 100% District inspection.

Connections to the end of an existing water main line shall be made with a main line valve, sized the same as the main line size, and new main construction connected to the new valve. Exceptions shall be considered where there is an existing valve in close proximity to the new connection.

Tapping of existing DI pipelines where required by the District, shall be made under pressure with tapping sleeve and valve assembly. Joints shall be tested using normal test pressure prior to start of tapping existing main. District shall determine where tapping under pressure is required. Romac FTS 420, or JCM 412 fusion-bonded, epoxy coated, steel tapping sleeves with Type 316 stainless steel fasteners or approved equal shall be required.

Where cut-ins are to be made in existing pipes, the work shall be conducted at a time specified by District and in such a manner as to minimize the interruption of service. Necessary pipe, fittings and gate valves shall be assembled at the site ready for installation prior to the shutting off of water in the existing main. Once the water has been cut off, the work shall be prosecuted vigorously and shall not be halted until the line is restored to service.

Unless specifically provided for elsewhere in these Specifications, the Developer shall have the responsibility of giving at least 5 business days notice to the District of intention to disrupt service and shall give at least 72 hours notice to the affected water users. Water service shutdowns shall not be scheduled on Mondays or Fridays.

F. Operation of District Valves

Developer/Contractor shall not operate any valves, including fire hydrant valves, in any part of the District's water system, except in the presence of the District. **Developer and/or Developer's Contractor shall be fined for tampering with the District's water system if valves are operated without the District being present.** Developer shall notify the District 48 hours in advance of need to operate system.

BY	DATE

REVISIONS

Sammamish Plateau Water
1510 228th Avenue SE, Sammamish, WA 98075
425.392.6256 ▪ spwater.org

STANDARD MATERIAL AND CONSTRUCTION NOTES

DATE: 10/24/2017
DRAWN: JTF
CHECKED: NONE
JOB NO.

3.1 SEWER SYSTEMS

A. Manholes

Precast manhole base sections shall be placed on a well-compacted bedding course of bedding material. The depth of the bedding shall be four (4) inches thick or greater, extending a minimum of twelve (12) inches beyond the outside perimeter of the base section. The balance of any remaining excavated area shall be filled with imported backfill material and well-tamped to the level of the top of the bedding before the manhole is set in place. The bedding shall be well-tamped and made smooth and level to assure uniform contact and support of the precast elements.

All lift holes (inside and outside) and the inside face of rubber gasket joints between precast sections shall be thoroughly wetted and then filled with grout, smoothed and all joints pointed.

Precast sections shall be placed and aligned to provide vertical sides and vertical alignment of ladder rungs. Eccentric cone shall be positioned to allow vertical access to the ladder. The completed manhole shall be rigid, true to dimension and watertight.

Manholes eight (8) feet and less in depth shall have cones a maximum of two (2) feet in height.

Manholes twenty (20) feet or greater in depth shall conform to the Deep Manhole detail on the Standard Details.

Manholes set in paved streets or other paved areas shall be set flush with finished grade of the paving and when required, the manhole frame shall be tilted to conform to the grade on the paved surface.

Manholes set in gravel shoulders or other non-paved improved areas shall be set flush with the finished grade and in an asphalt apron six (6) feet in outside diameter. The asphalt apron shall be tapered per the Standard District Details. The manhole frame shall be tilted to conform to the grade of the finished surface.

Manholes not set in paved or improved areas shall be set at a finished grade six (6) inches to twelve (12) inches higher than the surrounding terrain to prevent surface water infiltration into the system, unless plans specify otherwise. Manholes shall be surrounded by an asphalt apron as shown on the Standard Details.

Manholes installed in wet areas shall have additional measures added to ensure no water infiltration. Consult with District for requirements.

Manhole channels shall be made to conform to the sewer grade and shall be brought together with well-rounded junctions. Channel sides shall be carried up vertically to the top of the largest pipe's diameter and rounded to the shelf at the largest pipe's crown elevation. The concrete shelf shall be smoothly finished with slopes to drain.

The openings through which pipes come into the manhole shall be completely and thoroughly grouted. A watertight joint (Kor-n-Seal boot or approved equal) shall be provided where the pipe passes through the manhole wall.

B. 6-Inch Side Sewer from Main to Property Line

The strength class of side sewer pipe shall be the same as the sewer pipe to which it connects and these specifications shall be applicable to side sewer work.

The slope of side sewers shall not exceed one (1) foot vertical to one (1) foot horizontal when using SDR 35 D3034 PVC, nor be less than 2 percent . If ductile iron or C900 piping is used along with the corresponding change in mainline material, then slope is allowed a maximum of two (2) foot vertical to one (1) foot horizontal nor be less than two percent. When change in slope between connecting pipes exceeds two (2) inches per foot, standard 1/8 bends shall be used. All side sewers shall be plugged and plugs blocked.

The end of all side sewers at the property lines shall be marked with a vertical twelve (12) foot long, 2"x4" board, the bottom of which shall be located at the invert of the elevations of the side sewer and top of which shall be painted white and extend above the ground. The board shall be wrapped from one end to the other with a 12 AWG insulated wire. The wire shall be securely wrapped around the end of the side sewer. The word "SEWER" shall be stenciled in two (2) inch high black letters on the upper end of the board. Depth to invert shall be clearly shown on the board. For inverts that are deeper than 12 feet, the boards shall be extended to at least 4 feet above finish grade and the corresponding measurements to invert shall also be clearly shown.

C. Connection to the Existing Sewer System

Extensions to the District's sewer system shall be isolated from the existing system with a plug installed at the existing manhole in the presence of District personnel and maintained by the Developer until the sewer extension is accepted by the District. **Developer and/or Developer's Contractor shall be fined for tampering with the District's sewer system if the plug is removed or a connection is made without the District being present.** Developer shall notify the District 48 hours in advance of need to install or remove plug or connect to the system. No connections shall be made to the existing sewer system without the presence of the District. Written application for connection shall be made to the District, and the connection shall be made at a time agreed upon with the District.

1. Connections to existing manholes shall be made as follows:

   a) If the manhole is "live", the manhole channel shall be tightly covered to prevent debris from entering the sewer line prior to breaking into the manhole wall. Immediately after the connection is made, the new pipe shall be plugged and blocked in such a manner that no water shall enter into the existing manhole. The plug shall not be removed without permission of the District. Additional upstream plugs may be required by District.

   b) If the existing manhole is not "live", a plug shall be installed in the downstream or discharge pipe of the existing manhole in addition to the above. Where new connections to existing manholes require an outside drop, two plugs for each drop shall be installed and blocked.

   c) The existing manhole shall be rechanneled

2. Connections to existing sewer main shall be made as follows:

   a) The existing line shall be cut and removed from the manhole excavation. A new manhole shall be installed in place of the removed existing line. The manhole shall be precast, minimum 48-inch diameter. The manhole shall be placed with a full stick of pipe centered through the manhole and coupled to both ends of the existing sewer line. The new sewer line inside the manhole shall be cut out and the manhole channeled. Sewage must be bypassed during channelling.

3. Connections of side sewers to an existing sewer line shall be made as follows:

   a) The connection to an existing sewer main shall be made with a cut in tee with slip couplings. If the connection is made to the existing sewer pipe while in operation, the existing sewer pipe shall be cut with a saw or approved equal to give a smooth beveled edge of the proper size and the lip shall be filed smooth. Each connection shall be bedded with a minimum of six (6) inches of bedding material. Unsuitable foundation material shall be over-excavated and replaced with bedding material.

   b) Alternatively, the connection shall be made with Romac "SST" Stainless Steel Tapping Sleeve (with stainless steel flange), with Protecto 401 FLxMJ adapter and gasket sized for appropriate side sewer pipe material; or an Insert-a-Tee. Romac side sewer saddle, Model CB, is NOT allowed.

D. Side Sewers (Gravity or Pressure)

Gravity or pressure (grinder pump) side sewers shall be installed and tested in accordance with the Sammamish Plateau Water and Sewer District "Side Sewer Regulations", latest edition.

E. Use of Ductile Iron Pipe for Sewers

The contractor shall furnish repair kits and shall repair the PROTECTO 401 ceramic epoxy lining damaged during installation, welding and/or field cutting operations.

F. Lift Stations

Lift stations shall be installed per District-approved plans and specifications. Lift stations shall be tested with representatives of the District, Developer, Contractor and all sub-contractors involved with the lift station present. Developer/Contractor shall furnish the District with three (3) copies of the Operation and Maintenance Manuals for the Lift Station in labeled binders.

3.2 TESTING FOR WATER AND SEWER PIPELINES

A. Hydrostatic Tests For Ductile Iron Water and Sewer Mains

Ductile iron water and sewer main installations shall be subjected to a hydrostatic pressure test of 250 PSI for a minimum of 15 minutes, before leakage measurement starts. Location of the test pump shall be approved by the District. It shall then be held at this pressure, without pumping, and any leaks or imperfections developing under said pressure shall be remedied by the Contractor before final acceptance of the work. Leakage shall be measured by approved means in the presence of the District. The Contractor shall provide all necessary equipment to allow the District's inspectors to use their gauges and equipment and shall perform all work connected with the tests. Tests shall be made after corporation stops and service lines are installed, and the trench is backfilled and compacted. All valves within the section being tested shall be open, if possible. No more than 1,500 feet of 8-inch main can be tested at one time. Butterfly valves shall be tested at 150 psi above the static water pressure, with a maximum pressure of 250 psi unless otherwise noted.

Allowable leakage in gallons per fifteen minutes per 1,000 feet of pipe:

2" - 0.06 gallons	8" - 0.24 gallons	14" - 0.42 gallons	20" - 0.59 gallons
4" - 0.12 gallons	10" - 0.30 gallons	16" - 0.48 gallons	24" - 0.71 gallons
6" - 0.18 gallons	12" - 0.36 gallons	18" - 0.54 gallons	

B. Hydrostatic Tests For HDPE Water and Sewer Mains

HDPE water and sewer main installations shall be subjected to a hydrostatic pressure test of 1.5 times the rated operating pressure of the pipe. Location of the test pump shall be approved by the District. To establish equilibrium, the pipe shall be raised to the test pressure and allowed to stand without makeup pressure for 2 to 3 hours to allow for expansion of the pipe, unless otherwise approved or directed by the District. After equilibrium is established, the test section shall be pressurized to 1.5 times the rated operating pressure of the pipe. The pump shall be turned off and the final test pressure shall be held for 1, 2, or 3 hours as determined by the District at the time of testing. The amount of "make up" water shall be measured in the presence of the the District Inspector, utilizing a District-approved method. The allowable amounts of make up water for expansion during the leak test are as listed below (US Gallons / 100-feet of pipe):

Nominal Pipe Size (inches)	1 - Hour Test	2 - Hour Test	3 - Hour Test
3	0.10	0.15	0.25
4	0.13	0.25	0.40
6	0.30	0.60	0.90
8	0.50	1.00	1.50
10	0.80	1.30	2.10
11	1.00	2.00	3.00
12	1.10	2.30	3.40
14	1.40	2.80	4.20
16	1.70	3.30	5.00
18	2.00	4.30	6.50
20	2.80	5.50	8.00
22	3.50	7.00	10.50
24	4.50	8.90	13.30
28	5.50	11.10	16.80
32	7.00	14.30	21.50
36	9.00	18.00	27.00
42	12.00	23.10	35.30
48	15.00	27.00	43.00

Under no circumstances shall the total time under the test exceed eight (8) hours at 1.5 times the pressure rating. If the test is not completed due to leakage, equipment failure, etc., the test section shall be allowed to "relax" for eight (8) hours prior to the next test.

Any leaks or imperfections developing under said pressure shall be remedied by the Contractor before final acceptance of the work. The Contractor shall provide all necessary equipment to allow the District's inspectors to use their gauges and equipment and shall perform all work connected with the tests. Tests shall be made after corporation stops and service lines are installed. All valves within the section being tested shall be open, if possible.

C. Sterilization and Flushing Of Water Mains

Flushing of the water mains is to clean and sterilize the mains. Cleaning includes the flushing at a velocity and volume that will remove rocks and debris from the main.

Sterilization of water mains shall be accomplished by the Contractor in accordance with the requirements of the State Department of Health (DOH) and in a manner satisfactory to the District. During pipe installation the Contractor shall install chlorine granules per manufacturer's specifications to achieve a chlorine concentration of not less than 50 PPM. When a chlorine concentration of not less than 50 PPM has been established throughout the line, the valves shall be closed and the line left undisturbed for 24 hours. The line shall then be thoroughly flushed and water samples taken for approval by the local health agency.

If the main fails to pass purity tests the following procedure shall be followed. The section to be sterilized shall be thoroughly flushed at maximum flow prior to chlorination. Flushing shall be done in the presence of the District. Sections will ordinarily be sterilized between adjacent gate valves unless, in the opinion of the District, a longer section may be satisfactorily handled. Chlorine shall be applied by solution feed at one end of the section with a valve or hydrant at the opposite end opened sufficiently to permit a flow through during chlorine application. The chlorine solution shall be fed into the pipeline already mixed by an automatically proportioning applicator so as to provide a steady application rate of not less than 60 ppm chlorine. Hydrants along the chlorinated section shall be opened during application until the presence of chlorine has definitely been detected. When a chlorine concentration of not less than 50 ppm has been established throughout the line, the valves shall be closed and the line left undisturbed for 24 hours. The line shall then be thoroughly flushed and water samples taken for approval by the local health agency. Chlorination shall be repeated until water samples test satisfactory. The Contractor shall exercise special care in flushing to avoid damage to surrounding property.

The Contractor shall be responsible for disposal of treated water flushed from mains and shall neutralize the wastewater for protection of aquatic life in the receiving water before disposal into any natural drainage channel.

D. Cleaning And Jetting Of Sewer Mains

Prior to sewer pipe testing, all pipes and manholes shall be completely cleaned by jetting and vactoring. All debris from the jetting shall be removed at the first manhole where presence of the debris is noted. In event that cemented or wedged debris or damaged pipe cannot be dislodged by jetting, the obstruction shall be removed and/or repaired. No debris or jetting water shall be permitted to enter the existing sewer system.

E. Testing Of Non-Pressure Sewer Pipe

Testing, which includes CCTV Inspection, of all non-pressure sewer pipe shall be conducted on a manhole_to_manhole basis. Testing for District's approval shall only be allowed after all other nearby utilities have been installed and their trenches backfilled and compacted, all manholes have been channeled, and all manholes and sewer mains have been cleaned as discussed above in Subsection D.

All wyes, tees and ends of side sewer stubs shall be plugged with gasketed caps or plugs, or an alternate acceptable to the District and securely fastened to withstand the internal test pressure. Such plugs or caps shall be readily removable.

If any section of the sewer system is found to have deficiencies or fails to pass a test, the Contractor shall locate and repair any and all deficiencies or substandard work. After all repairs are made, the Contractor shall retest the full run of sewer main, manhole-to-manhole, at the District's sole discretion. All work, testing and retesting, under this section shall be completed at the Developer's or Contractor's expense.

Final Approval of the sewer system is conditional on successful completion of all tests and Inspections.

1. Pressure Testing: All runs of non-pressure sewer pipe shall be air tested at 4 psi. The procedures set forth in this section shall be employed in conducting the testing. All facilities and personnel for conducting the testing under the observation of the District shall be furnished by the Developer and/or Contractor. All equipment and personnel to conduct the test shall be subject to the approval of the District. Although air testing may be performed for the convenience of the contractor prior to backfilling, no pipe shall be accepted until air tests have been performed after backfilling and compacting. The installed pipe shall be tested with low pressure air as set forth in WSDOT/APWA 7-17.3(2)F.. All test gauges shall be brought to the surface and allow District personnel to verify the testing without entering the manhole structure.

2. Deflection Testing: All sanitary sewers constructed of flexible pipe shall be deflection-tested not less than 30 days after the trench backfill and compaction has been completed. The test shall be conducted by pulling a solid-pointed mandrel with a diameter equal to 95% of the pipe diameter through the completed pipeline.

3. Infiltration Testing: The District may require an infiltration test if it appears that there is excessive infiltration after air tests are completed. The District shall also be the sole judge of whether or not this test is required. The maximum allowable limit for infiltration shall be as per WSDOT/APWA 7-17.3(2)C. Failure to pass the infiltration test shall be cause for rejection.

4. Television/CCTV Inspection: The District shall require all runs of sewer pipe to be inspected by the use of a television camera not less than 30 days after the trench backfill and compaction has been completed. The costs of making all inspections and re-inspections, shall be borne by the Developer or Contractor.

   a. CCTV Equipment:

      1) Television inspection equipment shall have an accurate footage counter that will display on the monitor and record the camera distance from the centerline of the starting manhole.

      2) The camera shall be of the remotely operated pan and tilt type. The rotating camera and light head configuration shall have the capability of panning 360° with pan and tilt capability of providing a full view of the pipe to ensure complete inspection of the mainline pipe and service laterals.

      3) The camera, television monitor, and other components shall be color. To ensure peak picture quality throughout all conditions encountered, the color camera shall be equipped with the necessary circuitry to allow for the remote adjustment of the optical focus iris from the power control unit at the viewing station. A variable intensity control of the camera lights shall also be located at the viewing station.

      4) Lighting and camera quality shall be suitable to allow a clear, in-focus picture for the entire inside periphery of pipelines extending at least ten (10) feet in front of the camera. In High Density Polyethylene (HDPE) or ductile iron poly-lined pipe, lighting should be sufficient enough to provide a clear view at least two (2) feet in front of the camera. The replay of the recorded video information shall be free of electrical interference and shall provide a clear stable image.

      5) Camera quality shall be suitable to provide a full 360° view of the pipe during the inspection.

      6) The travel speed of the camera shall be variable but uniform and shall not exceed 30 feet per minute. Any means of propelling the camera through the sewer line which would produce non-uniform or jerky movement of the camera, will not be acceptable.

      7) The television system shall be capable of performing line segment inspection in increments of 400 feet with one setup.

      8) The District's 1-1/2" target, or the contractor's District-approved target, shall be used

   b. CCTV Procedure:

      1) Just prior to performing the video inspection procedure, dyed water must be introduced into the nearest upstream manhole until observed at the nearest downstream manhole. This will insure that any pipe segments with bellies are easily identified during CCTV inspection. Introduction of the dyed water shall be recorded.

      2) All fog shall be evacuated from the pipeline and the pipeline kept clear of any fog during the CCTV inspection process.

      3) Perform the inspection on all mainline sections from manhole to manhole.

      4) Should access to a particular sewer segment be difficult, and where adjacent segments require television inspection, the CCTV Contractor may be allowed to complete the inspection of multiple sewer line segments with one setup. When multiple sewer line segments are inspected utilizing one setup, the CCTV Contractor shall zero the footage counter at each subsequent sewer manhole to establish a uniform starting point for each line segment televised

      5) The interior of the pipe shall be carefully inspected to determine the location and extent of all deficiencies. Pipe conditions that result in a question of proper installation procedures shall be noted so that these conditions can be reviewed and, if necessary, corrected before actual acceptance of the sewer system.

      6) At all service connections, the camera shall be stopped and the pan and tilt features shall be used to obtain a clear picture. At each service lateral, the camera shall be panned to view up each lateral or point of connection. Make note of any deficiencies through the use of Data Collection Software.

      7) Prior to the beginning of each CCTV inspection, manhole identification numbers, as indicated on the record drawings, will be displayed in the title and shall become a part of the video record.

      8) As directed by District, the Developer's Engineer or thier representative, the camera shall be stopped to view and analyze conditions that appear unusual or uncommon. The CCTV inspection technician shall, at all times, be able to move the camera through the lines in either direction without the loss of quality in the video presentation

   c. The television-inspection format shall be provided on DVD in a MPEG file type that is able to be viewed using Windows Media Player, with separate MPEG files individually designated between each sewer run between manholes and listed on an index or menu. The file names shall reflect the manhole numbers on the plan for each sewer run between manholes. The associated television-inspection reports and the original DVDs shall be provided to the District immediately upon completion of the television-inspection. If contractor wants a copy, the contractor shall obtain one at same time as the original is completed. Provide the District with two copies of the written report for each sewer run between manholes.

F. Hydrostatic Tests For Pressure Sewer Pipe

After the trench is backfilled and compacted, all pressure sewer pipe shall be subjected to a hydrostatic pressure test in accordance with the test for the applicable pipe material, as specified previously in this section. All facilities and personnel for conducting the testing under the observation of the District shall be furnished by the Developer/Contractor and shall be subject to the approval of the District.

G. Testing For Low Pressure Mainline Sewers And Grinder Pump Systems

Testing shall conform to the requirements in the District's "Side Sewer Regulations", latest edition.

3.3 ABANDONMENT OF WATER AND SEWER FACILITIES

A. Abandonment of Water Mains

Water mains and valves to be abandoned shall be abandoned in accordance with the procedures listed below, so as to minimize the risk of leaking from abandoned valves and to minimize obstructions within the right-of-way. If an active water main that has an abandoned valve attached to it will be abandoned in the foreseeable future, as determined solely by the District, the abandoned valve can remain and its valve can and valve box shall be raised to finished grade, in accordance with A.1 below. However, if the valve is a double disc valve or if it is leaking, it must be removed in accordance with A.2 below. If an active water main that has an abandoned valve attached to it will NOT be abandoned in the foreseeable future, as determined solely by the District, the abandoned valve must be removed and the tee plugged or blind-flanged, in accordance with A.2 below.

1. For Abandoned Water Valve to Remain:

   a. Turn valve to the closed position.

   b. Remove valve box and valve can.

   c. Inspect valve for longevity of leaking from packing, etc.

   d. If valve is not leaking, cut out section of main from old valve.

   e. Install MJ plug or blind flange on valve.

   f. Plug old pipe with concrete. If pressure build-up from ground water entering the abandoned pipe is likely to occur (especially on hillsides), install a blocked MJ cap.

   g. Re-install the valve box and valve can, and install 6" grout in valve can to indicate a plugged valve.

   h. Backfill and compact.

2. For Abandoned Water Valve to Be Removed:

   a. Schedule a water main shutdown.

   b. Turn valve to the closed position.

   c. Remove valve box and valve can.

   d. Cut out section of main from old valve.

   e. Remove valve, and install blind flange or MJ plug on tee.

   f. Plug old pipe with concrete. If pressure build-up from ground water entering the abandoned pipe is likely to occur (especially on hillsides), install a blocked MJ cap.

   g. Backfill and compact.

B. Abandonment of Fire Hydrants

Fire hydrants to be abandoned shall be abandoned in accordance with the procedures listed below, so as to minimize the risk of leaking from abandoned valves and to minimize obstructions within the right-of-way. If an active water main that has an abandoned hydrant foot valve attached to it will be abandoned in the foreseeable future, as determined solely by the District, the abandoned foot valve can remain and its valve can and valve box shall be raised to finished grade, in accordance with B.1 below. However, if the valve is a double disc valve or if it is leaking, it must be removed in accordance with B.2 below. If an active water main that has an abandoned foot valve attached to it will NOT be abandoned in the foreseeable future, as determined solely by the District, the abandoned foot valve must be removed and the tee plugged or blind-flanged, in accordance with B.2 below.

1. For Abandoned Foot Valve to Remain:

   a. Turn 6-inch valve to the closed position.

   b. Remove valve box, valve can, and fire hydrant.

   c. If valve is not leaking, remove entire 6-inch pipe to hydrant, or cut out at least a 1-foot section of main from old valve.

   d. Install MJ plug or blind flange on valve.

   e. If hydrant run is not removed, plug both ends of hydrant run pipe with concrete.

   f. Re-install the valve box and valve can, and install 6" grout in valve can to indicate a plugged valve.

   g. Backfill and compact.

   h. If the existing hydrant is to be relocated due to some conflict, a new hydrant will be installed. The existing hydrant shall be delivered to the District's offices.

2. For Abandoned Foot Valve to Be Removed:

   a. Schedule a water main shutdown.

   b. Turn valve to the closed position.

   c. Remove valve box, valve can, and fire hydrant.

   d. Remove entire 6-inch pipe to hydrant, or cut out at least a 1-foot section of main from old valve.

   e. Remove valve, and install blind flange or MJ plug on tee.

   f. If hydrant run is not removed, plug both ends of hydrant run pipe with concrete.

   g. Backfill and compact.

   h. If the existing hydrant is to be relocated due to some conflict, a new hydrant will be installed. The existing hydrant shall be delivered to the District's offices.

C. Abandonment of Water Services

Water services must be abandoned at the water main in accordance with the following procedure:

1. Excavate to corporation stop and saddle.
2. If saddle is a single strap or is not stainless steel or the stainless steel strap/saddle/corporation stop is in poor condition, schedule a water main shutdown, then replace the saddle with a stainless steel repair band.
3. If the saddle is a stainless steel double strap in good condition, it can remain in place. Shut off the corporation stop and plug the abandoned service line. Polybag all exposed components of the abandoned saddle.
4. Install a brass plug on the corporation stop.
5. On the setter side, cut the service line away from the setter, plug the line, remove the setter and dispose of properly (return to District and place in recycle bin).
6. Arrange with the District's Customer Service Department for disposition of the water meter and documentation of the last meter reading.
7. Backfill and compact.

D. Abandonment of Manholes or Vaults

Manholes, vaults, and similar underground structures must be abandoned in accordance with the following procedure:

1. Remove frame and cover or vault lid and hatch(es).
2. Remove manhole cone and sections or vault sections as necessary so that remaining structure is at least 4 feet below finished grade.
3. Plug all pipe penetrations with grout.
4. Fill remaining structure with pea gravel to within 3.5 feet of the top of the remaining structure.
5. Fill the next 3.5 feet (to the top of the remaining structure) with CDF.
6. Backfill and compact the top 4 feet with suitable native material or import backfill to finished grade.

E. Abandonment of Pressure Sewers (Force Mains, Low Pressure Force Mains, and Grinder Pump Lines)

All pressure sewer lines, including force mains, low pressure force mains, and grinder pump lines, must be abandoned in accordance with the following procedure:

1. Force mains, low pressure force mains, and grinder pump lines that are to be abandoned should be flushed in a sanitary way to eliminate a septic condition, if possible.
2. Mains shall be physically disconnected from District's system and plug all forcemains larger than 2 inches in diameter with grout. Plug or cap all pipe ends 2 inches or smaller.
3. If pressure build-up from groundwater entering the abandoned force main or low pressure force main is likely to occur (especially on hillsides), install a blocked cap or plug on pipe 4 inches or larger, and install a watertight connection (e.g., pack joint) for pipe smaller than 4 inches.
4. Possible pressure grouting of abandoned main may be required on a case-by-case basis.

F. Abandonment of Gravity Side Sewers

All gravity side sewer lines must be abandoned in accordance with the following procedure:

1. Side sewer shall be physically disconnected from District's system.
2. A plug shall be installed in the side sewer tee at the sewer main.
3. A cap shall be installed on both ends of the side sewer.

REVISIONS	BY	DATE

Sammamish Plateau Water
1510 228th Avenue SE, Sammamish, WA 98075
425.392.6256 ▪ spwater.org

STANDARD MATERIAL AND CONSTRUCTION NOTES

DATE: 10/24/2017
DRAWN: JTF
CHECKED: NONE
JOB NO.

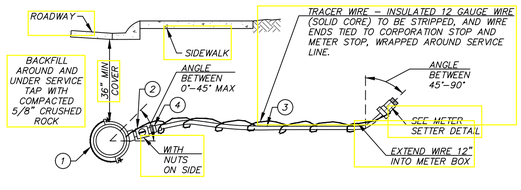

ITEM	DESCRIPTION	FORD PART NO	MUELLER PART NO	A.Y. MCDONALD	OTHER PART NO.	QTY
(1)	1" SADDLE I.P.T.	N/A	N/A	N/A	ROMAC 202S	1
(2)	1" CORPSTOP (MIPxMIP)	FB500-4	B2996	3131B1	N/A	1
(3)	1" HDPE PIPE	—ORISCOPLEX	5100 ULTRA LINE	SDR7 200 PSI	IPS OR PW EAGLE—	1
(4)	1" FIPxCOMPRESSION ADAPTOR W/ STAINLESS STEEL STIFFENER	C16-44P INSERT 53-72	H15454.10 505142	4754-33 6136	N/A N/A	2 2

* QUICK JOINT ACCEPTABLE, GRIP JOINT NOT ACCEPTABLE

1" SERVICE LINE

REV. 10/19/17

NOTES

1. ALL PIPE AND FITTINGS TO BE ASSEMBLED WITH TEFLON TAPE AND PIPE DOPE UNLESS OTHERWISE NOTED.
2. SERVICE LINES SHALL BE INSTALLED PERPENDICULAR TO THE WATER MAIN.
3. THE SERVICE LINE SHALL BE INSTALLED TO ALLOW FOR THE FAR SIDE OF THE METER BOX TO BE INSTALLED ON THE R/O/W AND CENTERED ON THE PROPERTY LINE OR EASEMENT LINE, UNLESS OTHERWISE DIRECTED BY THE DISTRICT.
4. THE METER BOX SHALL BE INSTALLED WITH THE FAR SIDE OF THE METER BOX (BACK SIDE) ON THE R/O/W, PROPERTY LINE OR EASEMENT LINE, IN LANDSCAPED (NON-TRAFFIC, NON-CRUSHED SURFACING TOP COARSE, NON-CONCRETE) AREAS.
5. BACKFILL AROUND METER BOXES AND SETTERS SHALL BE WITH IMPORTED BACKFILL, OR WITH NATIVE MATERIAL THAT MEETS THE REQUIREMENTS FOR IMPORTED BACKFILL, EXCEPT THAT 100% SHALL PASS 2" SQUARE. PEA GRAVEL OR SAND ARE NOT ALLOWED.
6. PROVIDE AT LEAST 18-INCHES CLEARANCE FROM ALL OTHER UTILITIES, BUSHES, AND OBSTRUCTIONS. PROVIDE AT LEAST 5-FEET FROM ALL TREES, AND STRUCTURES. NO FENCES OR ROCKERIES SHALL BE PLACED BETWEEN THE METER BOX AND THE MAIN.
7. METER BOXES LOCATED WITHIN 2 FEET OF DRIVEWAYS, PAVED AREAS, OR AREAS WHERE THE BOX CAN BE SUBJECTED TO VEHICULAR TRAFFIC, SHALL BE A TRAFFIC BEARING METER BOX AS NOTED BELOW. LOCATING A METER BOX IN AN AREA SUBJECT TO VEHICULAR TRAFFIC REQUIRES WRITTEN DISTRICT APPROVAL DURING DESIGN. METER BOXES THAT BECOME LOCATED IN TRAFFIC AREAS DURING OR AFTER CONSTRUCTION WITHOUT DISTRICT WRITTEN APPROVAL DURING DESIGN SHALL BE ABANDONED AT THE MAIN AND A NEW SERVICE SHALL BE INSTALLED TO A LANDSCAPED (NON-TRAFFIC) AREA.
8. WHERE TRAFFIC BEARING METER BOXES ARE USED WITHIN A CONCRETE SURFACE, A 5/8 INCH EXPANSION JOINT SHALL BE PROVIDED AROUND THE BOX WITH AN EIGHTEEN (18) INCH GAP BETWEEN THE EXPANSION JOINT AND METER BOX ON ALL SIDES.
9. APPROVED METER BOXES SHALL BE AS FOLLOWS:
   A) APPROVED METER BOXES FOR SINGLE SERVICES IN NON-TRAFFIC AREAS: CARSON 1220-12
   B) FOR SINGLE SERVICE IN TRAFFIC AREAS: FOGTITE B10 W/ALUMINUM LID.
10. MAINTAIN AND LEAVE SERVICE MARKER IN PLACE UNTIL LANDSCAPING IS DONE.
11. ANY DEVIATION FROM THESE ABOVE STANDARDS SHALL REQUIRE A WRITTEN VARIANCE REQUEST TO THE DISTRICT FOR REVIEW AND CONSIDERATION.

REV. 10/27/17

WATER SERVICE NOTES AND METER BOX REQUIREMENTS

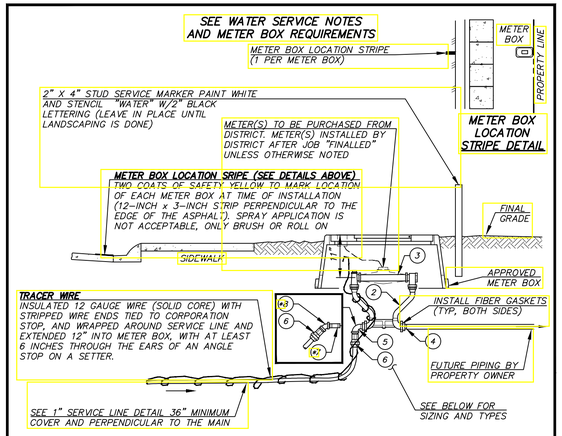

METER SETTER PROFILE VIEW

SINGLE 3/4" METER SETTER

ITEM	DESCRIPTION	FORD PART NO	MUELLER PART NO	A.Y. MCDONALD	OTHER PART NO	QTY
(1)	NOT REQUIRED					–
(2)	3/4" METER SETTER	VBH72-12W-11-33-NL	N/A	N/A	N/A	1
(3)	1" x 7-1/2" IDLER W/WASHERS		PVC SCH 80			1
(4)	3/4" PVC PLUG		PVC SCH 40/80			1
(5)	3/4" BRASS 90° STREET ELL					1
(6)	3/4" MIP x 1" IPS PAC JOINT W/ STIFFENER	FOC8634	H15429	473-CP	N/A	1
* (7)	3/4" x 3" BRASS NIPPLE (OPTIONAL)					1
* (8)	3/4" BRASS 45° BEND OR ELL (OPTIONAL)					1

SINGLE 1" METER SETTER

ITEM	DESCRIPTION	FORD PART NO	MUELLER PART NO	A.Y. MCDONALD	OTHER PART NO	QTY
(1)	NOT REQUIRED					–
(2)	1" METER SETTER	VBH74-12W-11-44-NL	N/A	N/A	N/A	1
(3)	1-1/4" x 11" IDLER W/WASHERS		PVC SCH 80			1
(4)	1" PVC PLUG		PVC SCH 40/80			1
(5)	1" BRASS 90° STREET ELL					1
(6)	1" MIP x 1" IPS PAC JOINT W/ STIFFENER	FOC8644	H15429	473-CP	N/A	1
* (7)	1" x 3" BRASS NIPPLE (OPTIONAL)					1
* (8)	1" BRASS 45° BEND OR ELL (OPTIONAL)					1

* OPTIONAL

3/4" AND 1" METER SETTER

REV. 10/27/17

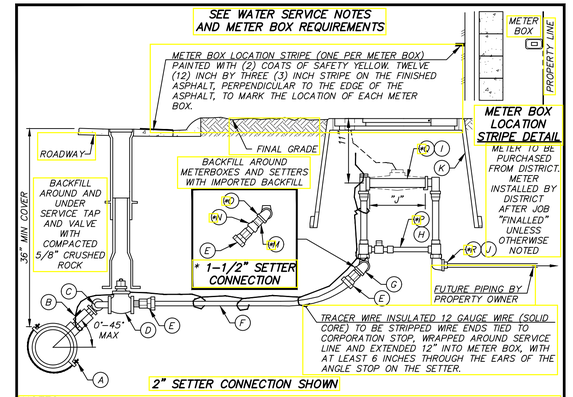

2" SETTER CONNECTION SHOWN

NOTES

1. ALL PIPE AND FITTINGS TO BE ASSEMBLED WITH TEFLON TAPE AND PIPE DOPE UNLESS OTHERWISE NOTED.
2. METER BOXES LOCATED WITHIN 2 FEET OF DRIVEWAYS, PAVED AREAS, OR AREAS WHERE THE BOX CAN BE SUBJECTED TO VEHICULAR TRAFFIC OR AT THE DIRECTION OF THE DISTRICT, SHALL BE A FOGTITE TYPE 2 METER BOX WITH A STEEL REINFORCED LID.
3. WHERE TRAFFIC BEARING METER BOXES ARE USED WITHIN A CONCRETE SURFACE, A 5/8 INCH EXPANSION JOINT SHALL BE PROVIDED AROUND THE BOX WITH AN EIGHTEEN (18) INCH GAP BETWEEN THE EXPANSION JOINT AND METER BOX ON ALL SIDES.
4. METER BOXES TO BE INSTALLED IN NON TRAFFIC AREAS. ALTERNATIVE LOCATIONS REQUIRE WRITTEN DISTRICT APPROVAL.
5. METER BOXES SHALL BE INSTALLED WITH THE FAR SIDE OF THE BOX (BACK SIDE) ON THE R/O/W, PROPERTY OR EASEMENT LINE, UNLESS OTHERWISE DIRECTED BY THE DISTRICT. SERVICES SHALL BE INSTALLED PERPENDICULAR TO THE WATER MAIN.

ITEM	QTY	DESCRIPTION
A	1	2" ROMAC SADDLE IPT, STYLE #202S, DOUBLE STRAP
B	1	2" CORPORATION STOP MIP X MIP, W/ NUT ON TOP (FORD# FB500, MUELLER# B2996, A.Y. MCDONALD# 3131B)
C	2	2" BRASS STREET ELBOW (SWING JOINT)
D	1	2" (RSGV) GATE VALVE X FIP W/SQUARE OPERATING NUT W/ CAST IRON VALVE BOX AND LONG SKIRT LID
E	1	2" PACK JOINT W/STAINLESS STEEL STIFFENER X MIP (FORD# C86-77, MUELLER # E15929)
F	VARIOUS	DRISCOPLEX 5100 ULTRA LINE OR PW EAGLE, 2" HIMOL POLY PIPE SDR-7 200 PSI
G	2	2" 90° BRASS STREET ELBOW
H	1	2" METER SETTER, FORD NO. VBH 87-12B-11-77 (ONLY) W/ BRASS STREET 90
I	1	2" IDLER SCH. 80 (J= 13") W/WASHERS
J	1	2" PVC PLUG, SCHEDULE 40/80
K	–	METER BOX – CARSON JUMBO #1730 W/P5L METER READING LID AND INSPECTION PLATE (MARKED FOR WATER) FOR NON TRAFFIC AREAS. WITH WRITTEN DISTRICT APPROVAL FOGTITE TYPE 2 (MARKED FOR WATER) W/ STEEL REINF. LID FOR TRAFFIC AREAS.
*M	1	1-1/2" x 3" BRASS NIPPLE
*N	1	1-1/2" x 2" BELL REDUCER
*O	2	1-1/2" 90° BRASS STREET ELBOW
*P	1	1-1/2" METER SETTER, FORD NO. VBH 86-12B-11-66 W/ BRASS STREET 90 OR VBH 76-12B
*Q	1	1-1/2" IDLER SCH. 80 (J=13") W/ WASHERS
*R	1	1-1/2" PLUG, SCHEDULE 40/80

1-1/2" AND 2" METER SETTER

REV. 10/19/17

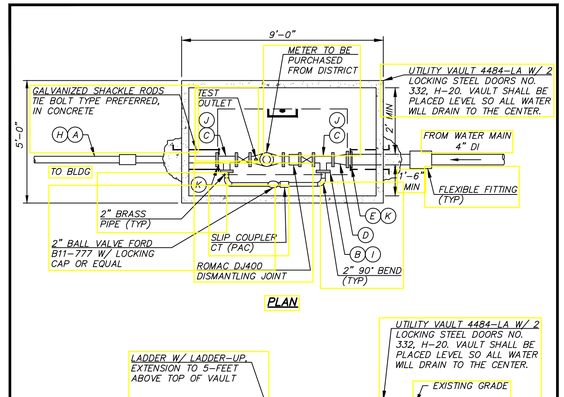

NOTES

1. SEE 3" AND 4" METER NOTES AND MATERIALS FOR ADDITIONAL CONSTRUCTION REQUIREMENTS.
2. DISTRICT SUPPLIED METER IS A 3" OR 4" WITH TRPL REGISTER (TOUCH PAD MOUNTED IN VAULT LID).

3" AND 4" METER

REV. 10/20/17

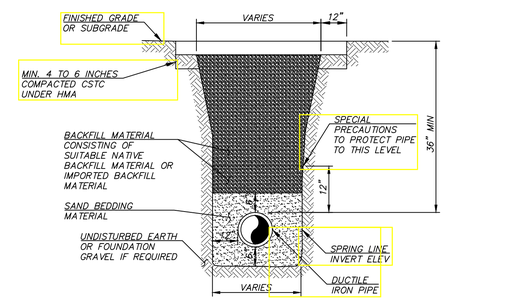

WATER MAIN TRENCH SECTION

REV. 10/30/17

3" METER (ONLY)		4" METER (ONLY)	
A	3" GALV	H	4" DI
B	3" BLIND FLG TAPPED 2" (2 PLACES TYP)	I	4" BLIND FLANGE TAPPED 2" (2 PLACES TYP)
C	3" TEE (FLG)	J	4" TEE (FLG) (TYP)
D	4" x 3" REDUCER (FLxFL)	K	4" FCA (TYP)
E	4" FCA (TYP)	L	4" GATE VALVE (FLG) W/HAND WHEEL OPERATOR (TYP)
F	3" GATE VALVE (FLG) W/HAND WHEEL OPERATOR (TYP)	M	4" ADJUSTABLE PIPE SADDLE SUPPORT GRINNELL #264
G	3" ADJUSTABLE PIPE SADDLE SUPPORT GRINNELL #264		

NOTES

1. VAULT COVER SHALL MATCH EXISTING GRADE OR 6" ABOVE IN UNIMPROVED AREAS.
2. PAINT SCHEDULE:
   EXTERIOR OF VAULT – BELOW GRADE TWO COATS OF BLACK BITUMASTIC SOLUTION (VAULT SHOULD BE DRIED WITH NO MOISTURE PRESENT PRIOR TO APPLICATION OF COATINGS)
   PAINT INTERIOR PIPING (NON BRASS) – ONE (1) COAT RUST RESISTOR PRIMER TWO (2) COATS SAFETY BLUE SEMI GLOSS PAINT
3. IF POSITIVE DRAINAGE FROM VAULT CANNOT BE ACHIEVED A SUMP PUMP SYSTEM WILL BE REQUIRED WITH DISTRICT APPROVAL. POWER SHALL BE SUPPLIED AND MAINTAINED BY THE DEVELOPMENT.
4. FLEXIBLE FITTING WHEN ENTERING AND EXITING VAULT WITHIN 5 FEET OF VAULT. IF (MJ) BELL CONNECTION IS WITHIN 5 FEET OF THE VAULT, FITTING MAY BE OMITTED (2 PLACES TYPICAL).
5. CORE DRILL 1-3/4" HOLE IN ONE OF THE HATCHES NEAR CENTER FOR INSTALLATION OF A ANTENNAE MOUNT, WHEN NOT IN TRAFFIC AREA.
6. USE 2" THREADED BRASS AND UNION AS NEEDED.

3" AND 4" METER NOTES AND MATERIALS

REV. 10/30/17

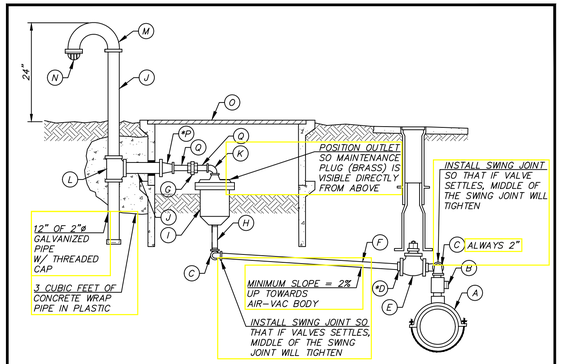

NOTES

1. ALL PIPE AND FITTINGS TO BE GALVANIZED EXCEPT WERE NOTED AND ASSEMBLED WITH TEFLON TAPE AND PIPE DOPE.
2. LOCATION OF THE AIR AND VACUUM RELIEF ASSEMBLY AS SHOWN ON THE PLANS IS APPROXIMATE.
3. INSTALLATION OF THE VALVE SHALL BE SET AT THE HIGH POINT OF THE LINE.
4. PAINT CANE ASSEMBLY WITH TWO (2) COATS OF SAFETY YELLOW AND APPLY COLE LETTERS TO CANE ASSEMBLY WITH FOOTAGE TO VALVE ON SIDE FACING ROADWAY IN 1.5" COLE NUMBERS. APPLY WITH WATER PROOF LIQUID NAILS.
5. PROVIDE 5-FOOT OF CLEARANCE FROM TREES, AND STRUCTURES, 18-INCHES FROM BUSHES.

MK	QTY	ITEM
A	1	2" ROMAC SADDLE I.P.T., DOUBLE STRAP STYLE 202S
B	1	2" CORPORATION STOP MIP X MIP, WITH NUT ON SIDE (NOT UNDER VALVE)
C	4	1" OR 2" BRASS STREET ELBOW, BRASS SWING JOINT W/ COUPLING OR 90° BEND
*D	1	2" X 1" BRASS BUSHING
E	1	2" GATE VALVE (FIP x FIP) W/2" SQUARE OPERATING NUT AND CAST IRON VALVE BOX AND LONG SKIRT LID
F	–	1" OR 2" THREADED BRASS PIPE (LENGTH TO SUIT) ON FIRM SUBGRADE
G	2	1" OR 2" GALVANIZED UNION
H	1	1 OR 2" BRASS NIPPLE
I	1	1" OR 2" APCO AIR AND VACUUM RELIEF VALVE (#143-C FOR 1" AND #145-C FOR 2") OR DISTRICT APPROVED EQUAL (REPLACE IRON ACCESS PLUG WITH BRASS PLUG)
J	–	2" GALVANIZED SCH. 40 PIPE (LENGTH TO SUIT)
K	1	1" OR 2" GALVANIZED STREET 90° ELBOW
L	1	2" TEE
M	1	2" RETURN BEND, SCH. 40 GALVANIZED
N	1	BEEHIVE STRAINER GREENBURG P-24-08, MALE FOR 2" PIPE
O	2	FOGTITE TYPE II CONCRETE BOX WITH STEEL LID, REINFORCED FOUR SIDES OR DISTRICT APPROVED EQUAL MARKED "A.V."
*P	1	2" X 1" GALVANIZED BELL REDUCER (NOT REQUIRED WITH A 2" ASSEMBLY)
Q	2	1" OR 2" GALVANIZED NIPPLE (ONLY ONE REQUIRED WITH 2")

* DENOTES ITEMS NOT REQUIRED WITH A 2" ASSEMBLY

1" AND 2" AIR AND VACUUM RELIEF VALVE ASSEMBLY

REV. 10/20/17

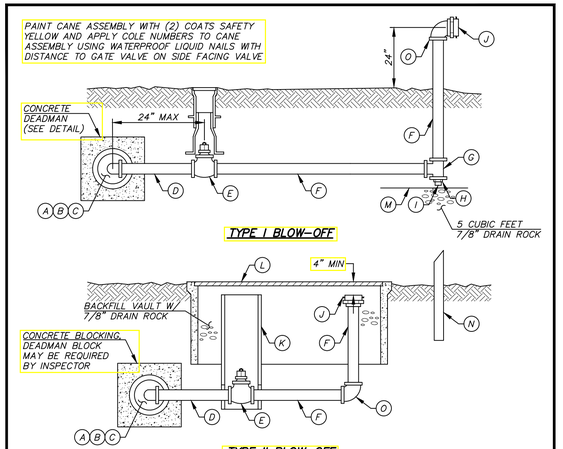

NOTE

1. ALL PIPE AND FITTINGS TO BE GALVANIZED EXCEPT WHERE NOTES AND ALL ASSEMBLED WITH TEFLON TAPE AND PIPE DOPE.

ITEM	TYPE I QTY	TYPE II QTY	DESCRIPTION
A	1	1	CAP W/ 2" IPS TAP
B	1	1	2" X 6" BRASS NIPPLE
C	1	1	2" 90° BRASS BEND
D	–	–	2" BRASS PIPE (LENGTH TO SUIT)
E	1	1	2" GATE VALVE W/SQUARE OPERATING NUT TYPE I REQUIRES CAST IRON VALVE BOX W/ DEEP SKIRT LID, TYPE II WITH 6" PVC PIPE ONLY
F	–	–	2" GALVANIZED IRON PIPE (LENGTH TO SUIT)
G	1	0	2" X 2" TEE
H	1	0	2" X 1/2" BUSHING
I	1	0	AUTOMATIC DRAIN VALVE – WEATHERMATIC 910
J	1	1	2" MIP X 2-1/2" NST FIRE HOSE ADAPTOR W/CAP TYPE I (MIP) , TYPE II (FIP) W/ 2" COUPLER
K	0	1	6" PVC (LENGTH TO SUIT)
L	0	1	FOGTITE TYPE 2 METER BOX W/ 3/8" SOLID STEEL TRAFFIC COVER (REINFORCED ON FOUR SIDES) AND H-20 LOADING MARKED "B.O."
M	–	–	FABRIC OR PLASTIC BARRIER
N	0	1	VALVE MARKER POST
O	1	1	2" 90° GALV. BEND

TYPE I AND II BLOW-OFF ASSEMBLY

REV. 10/20/17

NOTES

1. FIRE HYDRANT BOLLARDS SHALL NOT BE INSTALLED WITHIN RIGHT-OF-WAY UNLESS OTHERWISE DIRECTED BY THE DISTRICT.
2. FIRE HYDRANT BOLLARDS SHALL BE INSTALLED WITHIN COMMERCIAL DEVELOPMENTS UNLESS OTHERWISE DIRECTED BY THE DISTRICT.
3. THE NUMBER OF BOLLARDS AND PLACEMENT OF BOLLARDS SHALL BE SUFFICIENT TO PROTECT THE FIRE HYDRANT FROM VEHICULAR TRAFFIC AND AS DIRECTED BY THE DISTRICT.
4. "BLUE DOT" (STIMSONITE RAISED PAVEMENT MARKER-#88AB) REQUIRED 6" OFF CENTERLINE (OR 4" OFF ANY OTHER MARKER" OF ROAD PERPENDICULAR TO FIRE HYDRANT.
5. FIRE HYDRANT AND BOLLARDS SHALL BE PAINTED WITH (2) COATS OF SAFETY YELLOW SEMI GLOSS.
6. DISTANCE FROM CENTER OF HYDRANT TO ISOLATION VALVE CAP SHALL BE SHOWN ON BONNET OF HYDRANT IN FEET (TO THE CLOSEST FOOT) USING COLE NUMBERS AND APPLIED WITH WATERPROOF LIQUID NAILS.

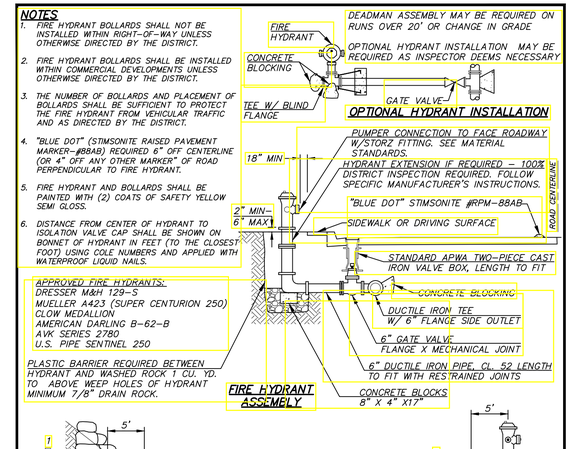

FIRE HYDRANT ASSEMBLY

REV. 11/6/17

REVISIONS	BY	DATE

Sammamish Plateau Water
1510 228th Avenue SE, Sammamish, WA 98075
425.392.6256 • spwater.org

STANDARD DETAILS
WATER DETAILS

DATE: 10/24/2017
DRAWN: JTF
CHECKED: NONE
JOB NO.

SHEET 1 OF 2

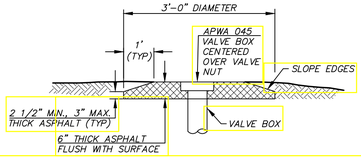

NOTES

1. THE COMPLETED PATCH SHALL BE FLUSH WITH THE SURROUNDING FINAL GRADE, SHALL NOT BE MORE THAN 1/8" FLUSH WITH THE SURROUND PAVEMENT, AND SHALL BE SMOOTH FOR TRAFFIC.
2. WHEN RAISING THE VALVE BOX TO FINISHED GRADE, EXCAVATE CASTING TO A DEPTH NECESSARY TO VERIFY CASTING OVERLAPS SOIL PIPE BY 3". ADD SOIL PIPE AS NEEDED. VALVE BOX SHALL BE CENTERED OVER THE VALVE NUT.
3. SLIP CANS ARE NOT ALLOWED WHEN RAISING VALVE BOXES TO GRADE.

REV. 10/20/17

VALVE BOX ASPHALT COLLAR DETAIL FOR NON-PAVED AREAS

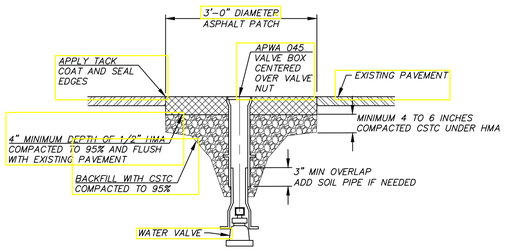

NOTES

1. VALVE CANS SHALL BE RAISED TO GRADE AFTER PLACEMENT OF THE ASPHALT'S FINAL LIFT AND WITHIN 48 HOURS UNLESS OTHERWISE APPROVED BY THE DISTRICT.
2. NEATLY REMOVE ASPHALT AROUND EXISTING VALVE CASTING.
3. EXCAVATE VALVE CASTING TO A DEPTH NECESSARY TO RAISE CASTING AND VERIFY CASTING OVERLAPS SOIL PIPE BY 3". ADD SOIL PIPE AS NEEDED. VALVE BOX SHALL BE CENTERED OVER THE VALVE NUT.
4. SLIP CANS ARE NOT ALLOWED.
5. BACKFILL WITH CSTC COMPACTED TO 95% (MODIFIED PROCTOR).
6. INSTALL 1/2" HMA IN 2-INCH LIFTS, TO A COMPACTED DEPTH EQUAL TO THE EXISTING PAVEMENT OR A MINIMUM OF 4", WHICHEVER IS GREATER. TACK ALL EDGES AND SEAL FINISH JOINTS WITH TAR AND SAND.
7. THE COMPLETED PATCH SHALL BE FLUSH WITH THE SURROUNDING PAVEMENT, SHALL NOT VARY FROM BEING FLUSH BY MORE THAN 1/8", AND SHALL BE SMOOTH FOR TRAFFIC.

REV. 10/20/17

VALVE BOX PAVEMENT PATCH DETAIL AND PAVED AREAS

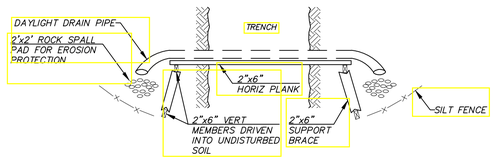

PLAN

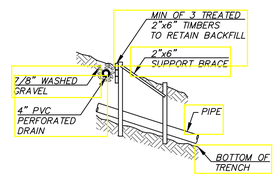

PROFILE

REV. 10/20/17

HILL HOLDER

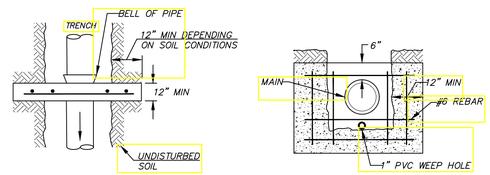

PLAN ELEVATION

PIPE ANCHOR REV. 10/20/17

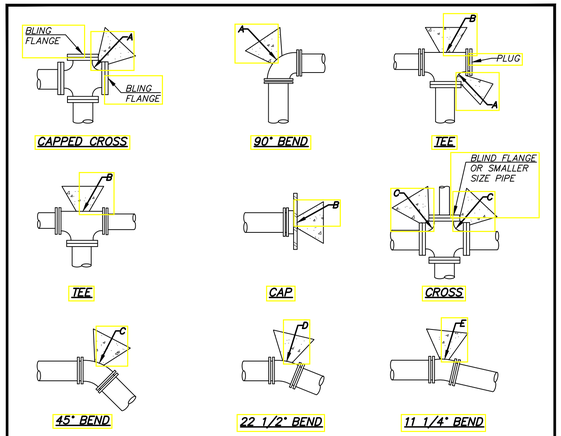

THRUST BLOCK TABLE
MIN BEARING AREA AGAINST UNDISTURBED SOIL (SF)

PIPE SIZE	A(FT²)	B(FT²)	C(FT²)	D(FT²)	E(FT²)	X
4"	3	1	1	1	1	NONE
6"	4	4	2	1	1	NONE
8"	7	6	4	2	1	4
10"	11	10	6	3	2	6
12"	16	14	9	5	3	9
14"	22	19	12	6	3	12
16"	29	25	16	8	4	16
18"	36	31	20	10	5	20
20"	45	39	24	13	6	24
22"	54	47	29	15	8	29
24"	64	56	35	18	9	35
28"	87	76	48	24	12	48
30"	101	87	55	28	14	55
36"	145	125	78	40	20	78
42"	197	171	107	55	27	107
48"	257	223	140	71	36	140

NOTES

1. BEARING AREA OF CONCRETE THRUST-BLOCK BASED ON 200 PSI PRESSURE AND SAFE SOIL BEARING LOAD OF 2,000 POUNDS PER SQUARE FOOT.
2. AREAS MUST BE ADJUSTED FOR OTHER PIPE SIZES, PRESSURES AND SOIL CONDITIONS.
3. CONCRETE BLOCKING SHALL BE CAST-IN-PLACE AND HAVE A MINIMUM OF 1/4 SQUARE FOOT BEARING AGAINST THE FITTING.
4. BLOCK SHALL BEAR AGAINST FITTINGS ONLY AND SHALL BE CLEAR OF JOINTS TO PERMIT TAKING UP OR DISMANTLING OF JOINT.
5. CONTRACTOR SHALL INSTALL BLOCKING ADEQUATE TO WITHSTAND FULL TEST PRESSURE AS WELL AS TO CONTINUOUSLY WITHSTAND OPERATION PRESSURE UNDER ALL CONDITIONS OF SERVICE.

CONCRETE BLOCKING REV. 10/20/17

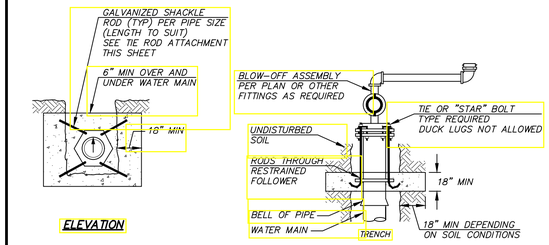

ELEVATION PLAN

DEADMAN REV. 10/18/17

CAST OF LUGS TIE BOLT

SIZE	PRESSURE PSI	FORCE IN POUNDS	NUMBER OF TIE RODS									
			2	3	4	6	8	10	12	14	16	24
3"	300	2,120	3/8"									
4"	300	3,780	3/8"									
6"	300	8,500	5/8"	1/2"		3/8"						
8"	300	15,100		3/4"	5/8"	1/2"						
10"	275	21,620			3/4"	5/8"	1/2"					
12"	250	33,930				3/4"	5/8"					
14"	250	46,200					3/4"					
16"	225	45,250					3/4"		5/8"			
18"	200	50,900					3/4"		5/8"			
20"	200	62,840						3/4"		5/8"		
24"	200	90,480								3/4"		
30"	200	141,370								1"	7/8"	
36"	200	203,580									1"	7/8"

TIE ROD ATTACHMENTS REV. 10/18/17

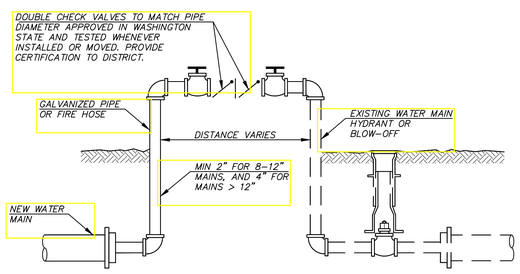

NOTES

1. FOR BELOW GROUND INSTALLATION, USE TYPE II BLOW-OFF ASSEMBLY, MODIFIED AS REQUIRED BY DISTRICT. INSTALL IN AREA NOT SUBJECT TO FLOODING.
2. ALL FILLING AND FLUSHING SHALL BE METERED BY DISTRICT. PROVIDE SPACE FOR INSTALLATION OF METER.
3. ALL NEW MAINS SHALL BE KEPT SEPARATE FROM THE DISTRICT'S EXISTING SYSTEM UNTIL THE NEW MAINS ARE TESTED AND ACCEPTED. FINAL CONNECTION REQUIRES 100% INSPECTION BY DISTRICT.
4. PROTECT ABOVE GROUND INSTALLATION FROM DAMAGE AND FREEZING.

TESTING CONNECTION REV. 10/18/17

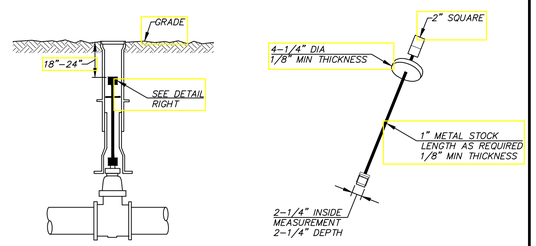

NOTE

EXTENSIONS ARE REQUIRED WHEN THE VALVE NUT IS MORE THAN 36" BELOW FINISHED GRADE. EXTENSIONS ARE TO BE A MINIMUM OF ONE (1) FOOT LONG. ONLY ONE EXTENSION TO BE USED PER VALVE. VALVE EXTENSION TO BE WITHIN 18" TO 24" OF FINISHED GRADE.

NOTE

ALL EXTENSIONS ARE TO BE MADE OF STEEL SIZED AS NOTED, AND PAINTED WITH TWO COATS OF CARBON ELASTIC (ATCO #222) AS SPECIFIED BY PRESERVATIVE PAINT CO. OR AN APPROVED EQUAL

VALVE OPERATING NUT EXTENSION REV. 10/24/17

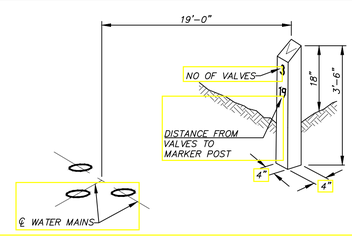

NOTES

1. VALVE MARKER POST SHALL BE A FOGTITE VALVE MARKER OR APPROVED EQUAL.
2. THE POST SHALL BE SET AT RIGHT ANGLES TO THE ROADWAY FROM THE VALVE AND SHALL BE SITUATED IN A SAFE AND REASONABLY CONSPICUOUS LOCATION.
3. FOR MORE THAN ONE VALVE, THE NUMBER OF VALVES SHALL BE NOTED NEAR THE TOP OF THE POST WITH THE DISTANCE TO THE CENTER OF THE VALVE (OR CLUSTER) MARKED BELOW.
4. PAINT VALVE MARKER WITH (2) COATS ALKYD INDUSTRIAL ENAMEL SAFETY YELLOW AND APPLY NUMBER OF VALVES AND DISTANCE (TO THE CLOSEST FOOT) TO THE LINE VALVE CAPS IN COLE NUMBERS APPLIED WITH WATERPROOF LIQUID NAILS.

VALVE MARKER POST REV. 10/24/17

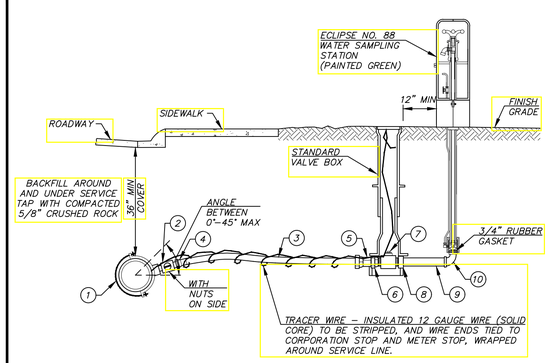

ITEM	DESCRIPTION	FORD PART NO	MUELLER PART NO	A.Y. MCDONALD	OTHER PART NO.	QTY
(1)	1" SADDLE I.P.T.	N/A	N/A	N/A	ROMAC 202S	1
(2)	1" CORPSTOP (MIPxMIP)	FB500-4	B2996	313191	N/A	1
(3)	1" HDPE PIPE	— DRISCOPLEX 5100 ULTRA LINE SDR7 200 PSI IPS OR IPW EAGLE—				1
(4)	1" FIPxCOMPRESSION ADAPTOR	C16-44P *	H15454.10	4754-33	N/A	2
	W/ STAINLESS STEEL STIFFENER	INSERT-72	505142	6136	N/A	2
(5)	1" PAC JOINT x 1" MIP	C86-44	H15429	475-CP	N/A	1
(6)	1" FIP x 3/4 FIP REDUCER	C11-43	N/A	N/A	N/A	1
(7)	3/4" BALL CORP MIP x MIP	FB500-3	N/A	N/A	N/A	1
(8)	3/4" COUPLING	N/A	N/A	N/A	N/A	1
(9)	3/4" BRASS NIPPLE	N/A	N/A	N/A	N/A	1
(10)	3/4" 90° BRASS STREET ELL	N/A	N/A	N/A	N/A	1

* QUICK JOINT ACCEPTABLE, GRIP JOINT NOT ACCEPTABLE

NOTES

1. ALL PIPE AND FITTINGS TO BE ASSEMBLED WITH TEFLON TAPE AND PIPE DOPE UNLESS OTHERWISE NOTED.
2. SERVICE LINES SHALL BE INSTALLED PERPENDICULAR TO THE WATER MAIN.
3. THE SERVICE LINE SHALL BE INSTALLED TO ALLOW FOR THE FAR SIDE OF THE SAMPLE STATION TO BE INSTALLED IN THE R/O/W OR EASEMENT LINE, UNLESS OTHERWISE DIRECTED BY THE DISTRICT.

WATER SAMPLING STATION REV. 10/30/17

REVISIONS	BY	DATE

Sammamish Plateau Water
1510 228th Avenue SE, Sammamish, WA 98075
425.392.6256 • spwater.org

STANDARD DETAILS
WATER DETAILS

DATE: 10/24/2017
DRAWN: JTF
CHECKED: NONE
JOB NO.

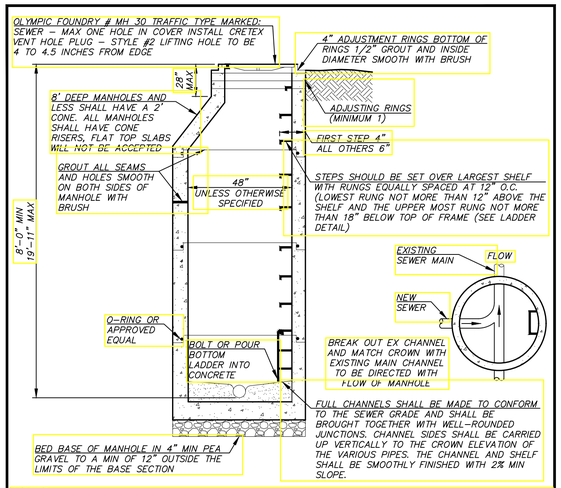

NOTES

1. BACKFILLING AND MECHANICAL COMPACTION SHALL BE PERFORMED CAREFULLY SO THAT NO DAMAGE IS IS DONE TO THE PIPE OR TO ITS ALIGNMENT. THE DISTRICT MAY DIRECT THE CONTRACTOR TO USE SPECIAL BACKFILL TECHNIQUES WHEN THE DISTRICT DEEMS IT NECESSARY. COMPACTION IS TO MEET KING COUNTY REQUIREMENTS.
2. MANHOLES SET IN PAVED STREETS OR OTHER PAVED AREAS SHALL BE SET TO FINISHED GRADE OF THE PAVING, AND WHEN REQUIRED THE MANHOLE FRAME SHALL BE TILTED TO CONFORM TO THE GRADE OF THE PAVED SURFACE. REMOVE ASPHALT FROM COVER AFTER PAVING.
3. ASPHALT PATCH WILL BE REQUIRED ON ALL MANHOLES INSTALLED ON THE SHOULDER OF THE ROADWAY. (SEE SANITARY MANHOLE ASPHALT PATCH DETAIL).
4. IF MANHOLE IS INSTALLED ON UNIMPROVED GROUND SET MANHOLE TOP 6" ABOVE GRADE WITH LOCKING COVER AND FRAME (OLYMPIC FOUNDRY #MH 30 D/T) AND ASPHALT PATCH (SEE MANHOLE ASPHALT ASPHALT COLLAR DETAIL).
5. BASE SECTION OPENINGS TO RECEIVE PIPE SHALL BE CIRCULAR CORE-DRILLED OR KNOCK-OUTS. KOR-N-SEAL CONNECTOR REQUIRED.
6. HORIZONTAL DISTANCE BETWEEN MANHOLES SCALED FROM WORKSHEETS AND ROADWAY PLAN AND PROFILES. ACTUAL DISTANCES TO THE COMPUTED AT TIME OF STAKING.
7. MANHOLES BETWEEN 6-FEET AND 8-FEET DEEP REQUIRE WRITTEN DISTRICT APPROVAL. MANHOLES LESS THAN 6 FEET DEEP ARE NOT ALLOWED.
8. MANHOLES 20' AND GREATER IN DEPTH SHALL BE 60" DIAMETER. FOR PIPE 15" OR GREATER DIAMETER, MANHOLES SHALL BE 72" DIAMETER.

STANDARD SANITARY MANHOLE REV. 10/19/17

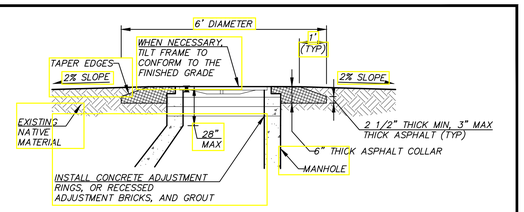

MANHOLE ASPHALT COLLAR FOR NON-PAVED AREAS REV. 10/19/17

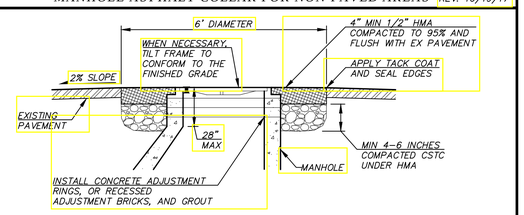

MANHOLE PAVEMENT PATCH FOR PAVED AREAS REV. 10/19/17

NOTES

1. CONTRACTOR SHALL WARRANTY MANHOLE ADJUSTMENT AREA FREE FROM LEAKS FOR ONE YEAR.
2. IN PAVED AREAS, MANHOLE FRAMES SHALL BE RAISED TO GRADE AFTER PLACEMENT OF THE ASPHALT'S FINAL LIFT AND WITHIN 48 HOURS UNLESS OTHERWISE APPROVED BY THE DISTRICT.
3. IN PAVED AREAS, NEATLY REMOVE ASPHALT AROUND EXISTING MANHOLE FRAME.
4. INSTALL CHANNEL BOARD IN MANHOLE PRIOR TO ANY WORK, AND REMOVE AFTER FINAL ADJUSTMENT.
5. PRIOR TO ADJUSTMENT, NOTIFY DISTRICT IF THE FINAL MANHOLE NECK WILL EXCEED 28".
6. IN PAVED AREAS, EXCAVATE AROUND EXISTING MANHOLE FRAME TO A MIN. DEPTH OF 12".
7. REMOVE FRAME AND COVER, AND INSTALL ADJUSTMENT RINGS, TILTING FRAME AS NECESSARY TO MATCH EXISTING GRADE. ADJUSTMENT BRICKS RECESSED FOR GROUTING, CAN BE UTILIZED. REINSTALL FRAME AND COVER.
8. IN PAVED AREAS BACKFILL WITH CRUSHED SURFACING TOP COURSE (CSTC) COMPACTED TO 95% (MODIFIED PROCTOR).
9. IN NON-PAVED AREAS, BACKFILL WITH APPROVED BACKFILL MATERIAL COMPACTED TO 95%
10. IN PAVED AREAS, INSTALL 1/2" HMA IN 2-INCH LIFTS, TO A COMPACTED DEPTH EQUAL TO THE EXISTING PAVEMENT OR A MINIMUM OF 4", WHICHEVER IS GREATER. TACK ALL EDGES AND SEAL FINISH JOINTS WITH TAR AND SAND.
11. IN UN-PAVED AREAS, INSTALL ASPHALT PATCH TO A MINIMUM COMPACTED DEPTH OF 6" AS SHOWN ABOVE.
12. GROUT MANHOLE NECK. "JETSET" NOT ALLOWED. DO NOT RUN GROUT ONTO MANHOLE FRAME.

REV. 10/19/17

GENERAL NOTES FOR ASPHALT COLLAR/PATCHES AROUND MANHOLES

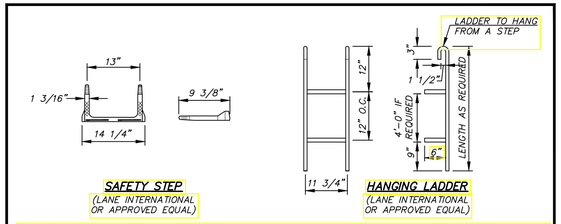

NOTES

1. POLYPROPYLENE PLASTIC STEPS SHALL BE A POLYPROPYLENE PLASTIC STEP INJECTION MOLDED AROUND A 1/2 INCH DIAMETER ASTM A-615, GRADE 60, STEEL REINFORCING BAR. INSTALLATION AS PER THE MANUFACTURER'S SPECIFICATIONS.
2. POLYPROPYLENE PLASTIC LADDER SHALL HAVE A POLYPROPYLENE PLASTIC STEP INJECTION MOLDED AROUND A 1/2 INCH DIAMETER ASTM A-615, GRADE 60, STEEL REINFORCING BAR, AND A POLYPROPYLENE PLASTIC RAIL INJECTION MOLDED AROUND A 9/16 INCH DIAMETER ASTM C-1018, COLD DRAWN BAR. INSTALLATION AS PER THE MANUFACTURER'S SPECIFICATION.

MANHOLE STEP AND LADDER REV. 10/19/17

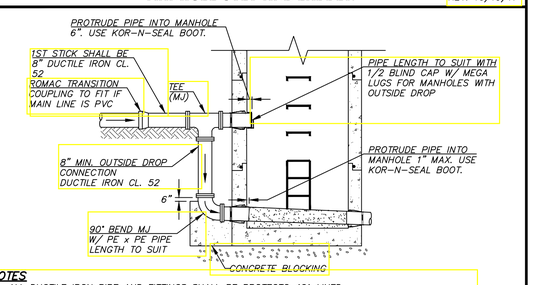

NOTES

1. ALL DUCTILE IRON PIPE AND FITTINGS SHALL BE PROTECTO 401 LINED.
2. DROP MANHOLE SHALL MEET ALL REQUIREMENTS AS STATED IN THE STANDARD MANHOLE DETAIL, MATERIALS AND CONSTRUCTION NOTES.
3. DROP MANHOLES SHALL ONLY BE USED IN STRAIGHT FLOW-THROUGH LOCATIONS (NO 90° TURNS).
4. ALL DUCTILE IRON FITTINGS WITH MEGA-LUGS.
5. VERTICAL BEND MAY BE REQUIRED DUE TO PIPE SLOPE CONDITIONS AT DUCTILE IRON TEE.

DROP MANHOLE REV. 10/19/17

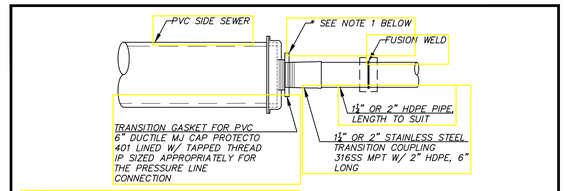

NOTES

1. FOR 1-1/4" SERVICE USE 2"x1-1/4" BRASS BUSHING.
2. FOR 2" SERVICE, OMIT BUSHING.

PRESSURE LINE CONNECTION REV. 10/19/17

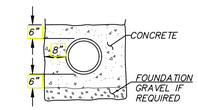

CONCRETE ENCASEMENT FOR SANITARY SEWERS REV. 10/19/17

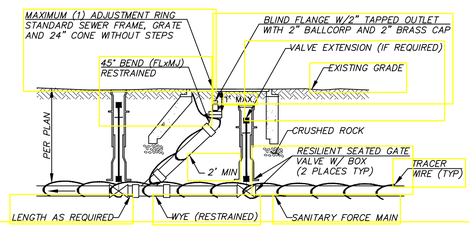

NOTES

1. VALVES, VALVE BOXES AND VALVE EXTENSIONS SHALL MEET THE SAME REQUIREMENTS AS SHOWN IN THE STANDARD WATER DETAILS. VALVE BOX COVERS SHALL OLYMPIC FOUNDRY 940 OR EQUAL MARKED "SEWER".
2. VALVE MARKER POSTS SHALL MEET THE SAME REQUIREMENTS AS SHOWN IN THE WATER DETAILS AND BE PAINTED AS SPECIFIED IN THE STANDARD CONSTRUCTION NOTES.
3. ALL D.I. PIPE AND FITTINGS SHALL BE PROTECTOR 401 EPOXY COATED. ALL PIPE AND FITTINGS SHALL BE RESTRAINED JOINT.

SANITARY FORCE MAIN CLEANOUT TYPE II REV. 10/19/17

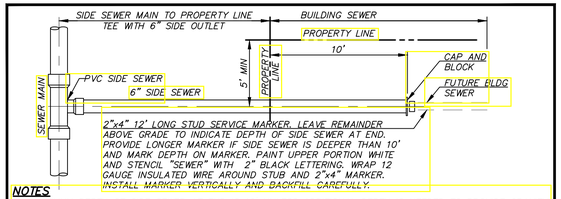

NOTES

1. MAXIMUM DEPTH OF SIDE SEWER AT END IS 10' UNLESS ADDITIONAL DEPTH IS NEEDED TO PROVIDE GRAVITY SEWER SERVICE.
2. FOR MULTI-FAMILY AND/OR COMMERCIAL PROJECTS, SIDE SEWERS MAY BE EXTENDED, AT THE DISTRICT'S DISCRETION, FROM THE EDGE OF THE ROAD OR PROPERTY LINE TO WITHIN 3 FEET OF THE BUILDING FOUNDATION.

SINGLE SIDE SEWER REV. 10/19/17

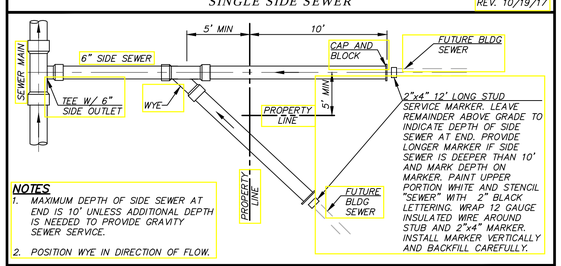

NOTES

1. MAXIMUM DEPTH OF SIDE SEWER AT END IS 10' UNLESS ADDITIONAL DEPTH IS NEEDED TO PROVIDE GRAVITY SEWER SERVICE.
2. POSITION WYE IN DIRECTION OF FLOW.

DOUBLE SIDE SEWER REV. 10/19/17

NOTES

1. CONNECTION OF NEW SIDE SEWER TO EXISTING MAIN MAY USE EITHER:
   - CUT IN TEE W/ PVC SLIP COUPLINGS.
   - ROMAC SST STAINLESS STEEL TAPPING SLEEVE W/ FL X MJ ADAPTER AND GASKET SIZED FOR D3034 PVC SIDE SEWER. ROMAC SIDE SEWER SADDLE, MODEL CB, IS NOT ALLOWED.
2. UNLESS OTHERWISE SHOWN ON PLAN, MINIMUM COVER FOR SIDE SEWERS (WHICHEVER IS LOWER):
   - 18" – PRIVATE PROPERTY
   - 3' – AT PROPERTY LINE
   - 2'-6" IF CROSSING A DITCH IN PUBLIC RIGHT OF WAY LOWER THAN THE LOWEST HOUSE ELEVATION

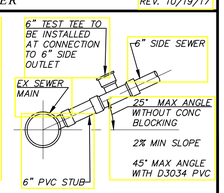

SIDE SEWER DETAILS REV. 10/19/17

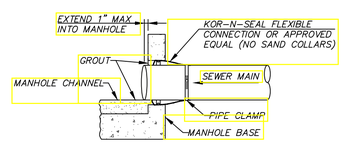

SANITARY MANHOLE INLET CONNECTION REV. 10/19/17

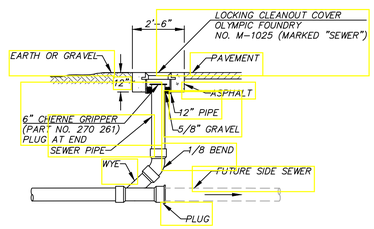

SIDE SEWER CLEANOUT REV. 10/19/17

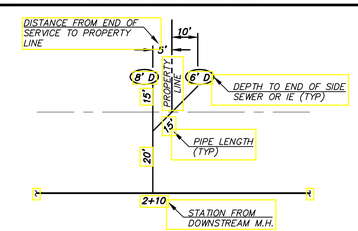

SIDE SEWER AS-BUILT REV. 10/19/17

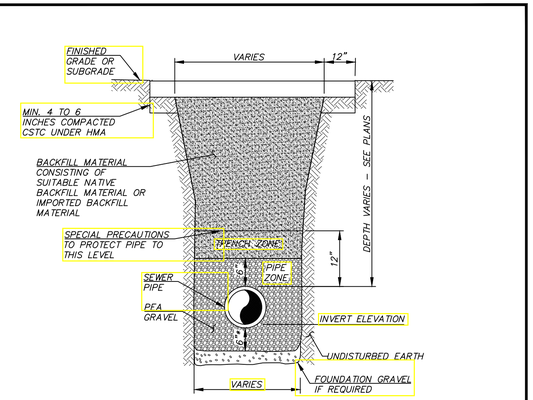

NOTES

1. * FOR PIPE DEEPER THAN 18', PIPE BEDDING SHALL EXTEND 18" ABOVE CROWN OF PIPE
2. NOT TO SCALE

SANITARY SEWER TRENCH SECTION REV. 10/30/17

NOTES

1. LOCATE TEST BOX OVER CENTERLINE OF FORCEMAIN.
2. PROVIDE TEST BOX AT 500' INTERVALS AND AT BENDS.
3. PROVIDE 12" WIRE LOOP INSIDE VALVE BOX (TYP).
4. INLINE CONNECTORS ON WIRE ARE NOT ALLOWED.

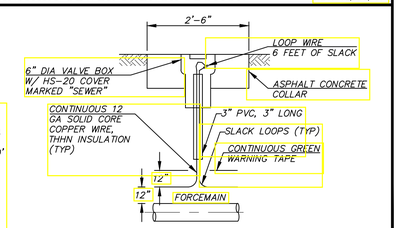

FORCEMAIN TRACER WIRE LOCATE STATION REV. 10/19/17

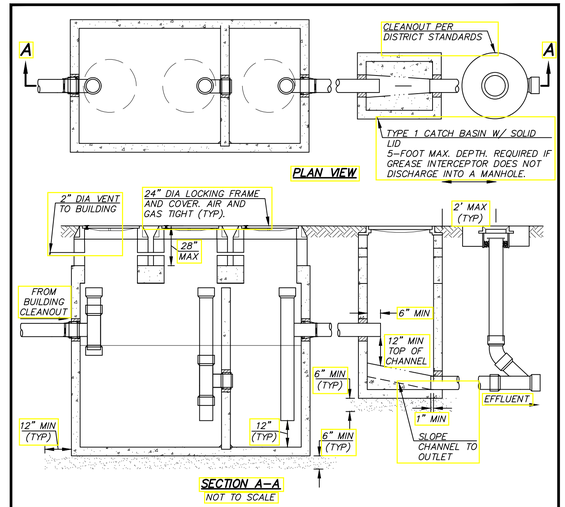

CONSTRUCTION NOTES

1. VAULT SHALL BE UTILITY VAULT GREASE INTERCEPTOR (1000 GALLON MINIMUM). VAULT SIZING CALCULATIONS SHALL BE SUBMITTED FOR REVIEW AND APPROVAL TO THE DISTRICT PRIOR TO APPROVAL OF CONSTRUCTION. LOCATED 50-FT MAX. FROM POINT OF ENTRY.
2. THE EXTERIOR OF VAULTS BELOW GRADE SHALL BE PAINTED WITH TWO (2) COATS OF BLACK BITUMASTIC SOLUTION. NO MOISTURE SHALL BE PRESENT DURING APPLICATION OF COATINGS.
3. NO MORE THAN 1-FOOT OF RISER RINGS FROM FINISHED GRADE. ADDITIONAL SECTIONS SHALL BE PROVIDED AS NECESSARY.
4. CLEAN OUTS PROVIDED 2-FOOT MAXIMUM AWAY FROM TYPE 1 CATCH BASIN.
5. MINIMUM OF 6-INCHES OF PEA GRAVEL BELOW STRUCTURES. EXTEND 12-INCHES BEYOND EDGES OF STRUCTURES.
6. ALL PIPING SHOWN IS 6" # PVC PER DISTRICT STANDARDS.

INSPECTION REQUIREMENTS

1. CONSTRUCTION WILL BE INSPECTED IN ACCORDANCE WITH THE DISTRICT'S SIDE SEWER STANDARDS. DOUBLE INSPECTION SHALL BE REQUIRED.
2. LEAK TESTING: VAULT MUST BE FILLED WITH WATER TO TEST FOR LEAKS. VAULT AND TYPE 1 CATCH BASIN MUST HOLD WATER FOR 10-MINUTES.
3. ALL PIPING PENETRATIONS MUST BE INSPECTED. ALL PENETRATIONS MUST BE PROVIDED WITH A KOR-N-SEAL ADAPTER, UNLESS OTHERWISE DIRECTED BY THE DISTRICT.
4. TRENCHES SHALL BE LEFT OPEN SO ALL STRUCTURES, PIPING, AND BEDDING CAN BE INSPECTED AND THE SIDE SEWER AS-BUILT DRAWING PROVIDED BY THE CONTRACTOR CAN BE CONFIRMED BY THE INSPECTOR.
5. INSPECTION IS REQUIRED AT THE EXISTING SIDE SEWER STUB OF WHERE THE FINAL CONNECTION WILL OCCUR.

REV. 10/19/17

STANDARD GREASE INTERCEPTOR (1,000 GALLON MIN)

REVISIONS	BY	DATE

Sammamish Plateau Water
1510 228th Avenue SE, Sammamish, WA 98075
425.392.6256 • spwater.org

STANDARD DETAILS

SEWER DETAILS

DATE: 10/24/2017
DRAWN: JTP
CHECKED: NONE
JOB NO.

SHEET 1 OF 2

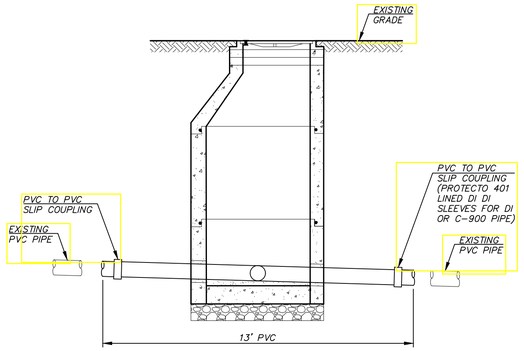

NOTES

1. PRIOR TO CUTTING THE EXISTING SEWER MAIN, THE CONTRACTOR SHALL HAVE EXACT MEASUREMENTS OF THE EXISTING PIPE INVERTS AND LENGTH MEASUREMENTS FOR INSTALLATION OF THE NEW MANHOLE AND NEW SEWER MAIN.
2. THE CONTRACTOR'S EXCAVATION SHALL BE ADEQUATE TO INSTALL THE SADDLE MANHOLE PRIOR TO CUTTING THE EXISTING SEWER MAIN.
3. THE CONTRACTOR SHALL BYPASS PUMP THE SEWER FLOW DURING THIS INSTALLATION.
4. THE CONTRACTOR SHALL HAVE A VACTOR TRUCK AVAILABLE FOR THIS CONSTRUCTION WORK.
5. SEE DISTRICT STANDARD MANHOLE DETAIL FOR OTHER SPECIFIC INSTALLATION REQUIREMENTS.
6. FOR A 72-INCH MANHOLE USE ROMAC DUCTILE IRON (DI) / PVC COUPLING TO CONNECT NEW PIPE TO EXISTING PIPE. USE 15-FOOT PIPE SEGMENT THROUGH MANHOLE.

CUT-IN ("SADDLE") MANHOLE — REV. 10/19/17

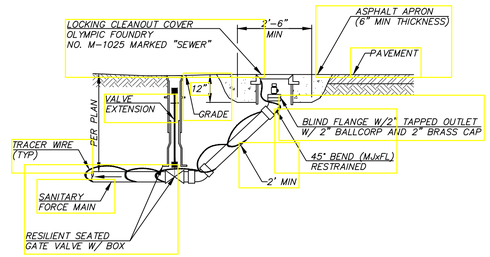

NOTES

1. VALVES, VALVE BOXES AND VALVE EXTENSIONS SHALL MEET THE SAME REQUIREMENTS AS SHOWN IN THE STANDARD WATER DETAILS. VALVE BOX COVERS SHALL BE OLYMPIC FOUNDRY 940 OR EQUAL MARKED "SEWER".
2. VALVE MARKER POSTS SHALL MEET THE SAME REQUIREMENTS AS SHOWN IN THE WATER DETAILS AND BE PAINTED AS SPECIFIED IN THE STANDARD CONSTRUCTION NOTES.
3. ALL D.I. PIPE AND FITTINGS SHALL BE PROTECTOR 401 EPOXY COATED. ALL PIPE AND FITTINGS SHALL BE RESTRAINED JOINT.

SANITARY FORCE MAIN CLEANOUT, TYPE II — REV. 10/19/17

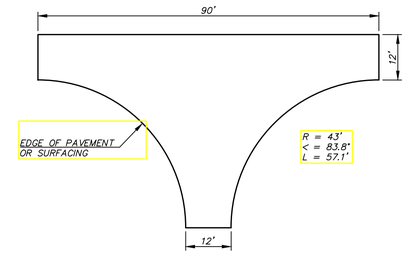

REV. 10/19/17

VACTOR TRUCK MINIMUM HAMMERHEAD TURNAROUND

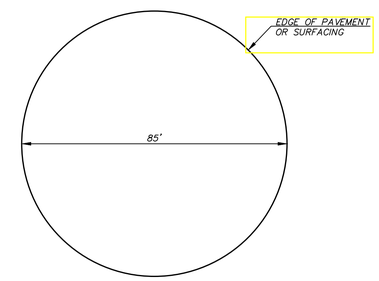

VACTOR TRUCK MINIMUM CIRCULAR TURNAROUND — REV. 10/19/17

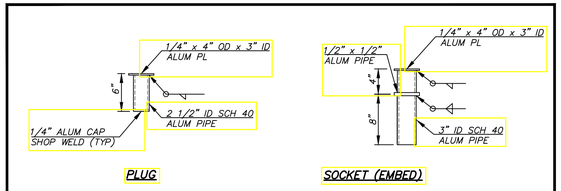

RECESSED SOCKET — REV. 10/19/17

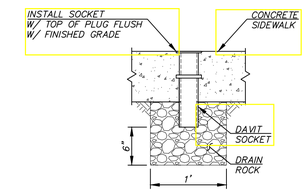

DAVIT SOCKET INSTALLATION SECTION — REV. 10/19/17

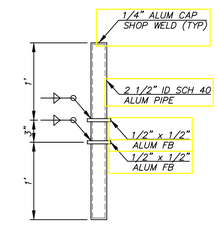

DAVIT SPINDLE — REV. 10/19/17

REVISIONS	BY	DATE

Sammamish Plateau Water
1510 228th Avenue SE, Sammamish, WA 98075
425.392.6256 • spwater.org

STANDARD DETAILS
SEWER DETAILS

DATE: 10/24/2017
DRAWN: JTF
CHECKED: NONE
JOB NO.:

SHEET 2 OF 2

PROCEDURAL REQUIREMENTS

1. ALL ASSEMBLIES MUST BE ON THE WASHINGTON STATE DEPARTMENT OF HEALTH APPROVED BACKFLOW ASSEMBLY LIST.
2. ALL ASSEMBLIES ARE REQUIRED TO BE TESTED BY A WASHINGTON STATE CERTIFIED TESTER UPON INSTALLATION AND ANNUALLY. IN ADDITION, ASSEMBLIES MUST BE TESTED AFTER REPAIRS, RELOCATION, REINSTALLATION AND AFTER A BACKFLOW INCIDENT. NOTE THAT AIR GAPS INSTALLED IN LIEU OF A REDUCED PRESSURE BACKFLOW ASSEMBLY ALSO REQUIRE ANNUAL INSPECTION. TEST REPORTS MUST BE SUBMITTED IMMEDIATELY TO THE DISTRICT.
3. CONTACT DISTRICT FOR INSPECTION OF ALL NEWLY INSTALLED ASSEMBLIES.
4. A CATALOG CUT PRODUCT SUBMITTAL SHALL BE PROVIDED TO THE DISTRICT PRIOR TO INSTALLATION FOR VERIFICATION OF ASSEMBLY APPROVAL STATUS.
5. WHEN INSTALLING AN ASSEMBLY INSIDE A BUILDING, ENSURE ASSEMBLY IS LOCATED WHERE OCCASIONAL SPITTING FROM THE RELIEF VALVE PORT, A FOULED CHECK, OR WATER FLUSHED OUT DURING THE ANNUAL TEST WILL NOT BE OBJECTIONABLE. PROPER DRAINAGE MUST BE PROVIDED. DISTRICT WRITTEN APPROVAL MUST BE RECEIVED FOR INSIDE INSTALLATIONS.
6. ALL RBPA ASSEMBLIES SHALL BE PROTECTED FROM FREEZING, FLOODING AND MECHANICAL DAMAGE DUE TO WATER HAMMER AND EXCESSIVE PRESSURE BUILD UP.

INSTALLATION REQUIREMENTS

1. CONTACT DISTRICT TO ENSURE YOU ARE INSTALLING THE CORRECT ASSEMBLY FOR THE DEGREE OF HAZARD.
2. ASSEMBLY MUST BE INSTALLED AS A UNIT, INCLUDING TWO SHUT OFF VALVES, RELIEF PORT, TWO CHECK VALVES, AND FOUR TEST COCKS. ALL ASSEMBLIES ARE REQUIRED TO BE AS A UNIT IN THE CONFIGURATION THEY WERE APPROVED BY DOH AND USC.
3. THOROUGHLY FLUSH THE WATER LINE PRIOR TO INSTALLING ASSEMBLIES.
4. ASSEMBLIES MUST BE INSTALLED A MINIMUM OF 12-INCHES FROM THE BOTTOM OF THE RELIEF PORT TO FINISHED GRADE, AND NO HIGHER THAN 5-FEET FROM THE FLOOR TO CENTERLINE OF ASSEMBLY. AN ASSEMBLY INSTALLED MORE THAN 5-FEET ABOVE FLOOR OR GROUND LEVEL MUST HAVE A PERMANENT PLATFORM UNDER IT FOR THE TESTER OR MAINTENANCE PERSON TO STAND ON. THE PLATFORM MUST COMPLY WITH ALL CURRENT AND APPLICABLE SAFETY STANDARDS AND CODES IN EFFECT. ALL ASSEMBLIES MUST BE INSTALLED HORIZONTALLY, UNLESS THEY HAVE WASHINGTON STATE APPROVAL TO BE INSTALLED VERTICALLY. IF INSTALLED IN A VERTICAL CONFIGURATIONS, IT MUST BE A MINIMUM OF 12-INCHES FROM FLOOR, AND NO HIGHER THAN 5-FEET FROM THE FLOOR TO CENTER OF THE #2 SHUT OFF VALVE. ALL ASSEMBLIES MUST MAINTAIN A SUFFICIENT CLEARANCE FROM ANY WALL TO ENSURE ACCESSIBILITY OF MAINTENANCE AND TESTING. SIZES 2-1/2 INCHES AND LARGER IN DIAMETER MAY REQUIRE ADDITIONAL SPACE ON ONE SIDE OF THE ASSEMBLY. ASSEMBLIES 2-1/2 INCHES AND LARGER IN DIAMETER SHALL HAVE SUPPORT BLOCK TO PREVENT FLANGE DAMAGE.
5. REDUCED PRESSURE BACKFLOW ASSEMBLIES SHALL NOT BE INSTALLED BELOW GROUND AT ANYTIME.
6. ASSEMBLIES MUST MEET THE ABOVE REQUIREMENTS TO ENSURE ACCESSIBILITY FOR TESTING, MAINTENANCE AND APPROVAL OF THE DISTRICT. VARIANCE OF ANY INSTALLATION MUST HAVE PRIOR WRITTEN APPROVAL OF THE DISTRICT.

AIR GAP REQUIREMENTS

1. AIR GAP MUST BE TWICE THE INLET DIAMETER OF THE INLET PIPE, MINIMUM OF 1-INCH FOR 1/2" PIPE OR SMALLER.
2. THE AIR GAP MUST PROVIDE A PHYSICAL SEPARATION FROM THE BOTTOM OF THE INLET PIPING TO THE TOP OF THE OVERFLOW RIM OF THE RECEIVING VESSEL.
3. IF INLET PIPING IS CUT DIAGONALLY TO DECREASE SPLASHING, THE AIR GAP SEPARATION IS MEASURED FROM THE BOTTOM OF THE CUT TO THE RECEIVING VESSEL.
4. IF AIR GAP IS LOCATED NEAR SIDEWALLS, THE SEPARATION INCREASES TO THREE TIMES THE INLET DIAMETER OF THE INLET PIPING, MINIMUM OF 1-1/2 INCHES.

REV. 6/9/17

STANDARD RPBA NOTES & INSTALLATION REQUIREMENTS

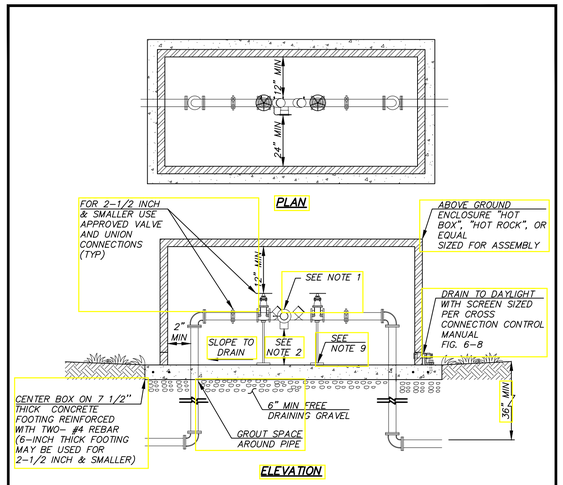

RPBA INSTALLATION NOTES

1. MUST BE ON THE LATEST DEPT. OF HEALTH APPROVED LIST OF BACKFLOW PREVENTION ASSEMBLIES.
2. MUST BE INSTALLED ABOVE FINISHED GRADE, MIN. 12 INCHES TO BOTTOM OF RELIEF PORT.
3. WHEN INSTALLED INSIDE A BUILDING, A FLOOR DRAIN SIZED TO ACCEPT MAXIMUM DISCHARGE FROM THE RELIEF ASSEMBLY IS REQUIRED.
4. FREEZE PROTECTION MUST BE PROVIDED.
5. RISERS AND ALL PIPE IN BOX TO BE BRASS, COPPER, OR PVC.
6. DO NOT INSTALL IN AN AREA SUBJECT TO FLOODING. ASSEMBLIES MUST BE INSTALLED ABOVE GROUND.
7. A DISTRICT CROSS CONNECTION SPECIALIST SHALL INSPECT INSTALLATION OF DEVICE AND RECEIVE TEST REPORTS PRIOR TO ESTABLISHMENT OF WATER SERVICE OR APPROVAL. TEST REPORTS MUST BE SIGNED BY A CERTIFIED BACKFLOW ASSEMBLY TESTER AND IMMEDIATELY SENT TO THE DISTRICT.
8. SOME CLEARANCES (I.E. SIDE AND TOP) MAY NOT BE REQUIRED FOR DEVICES WITH A FULLY REMOVABLE ENCLOSURE.
9. SUPPORTS MUST BE INSTALLED FOR SIZES LARGER THAN 2-1/2".

REV. 10/19/17

REDUCED PRESSURE BACKFLOW ASSEMBLY (RPBA) INSTALLATION

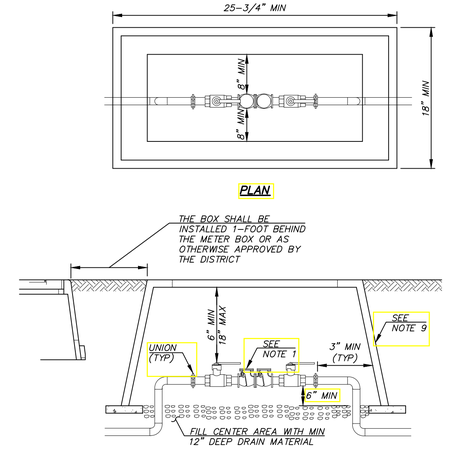

DCVA INSTALLATION NOTES

1. MUST BE ON THE LATEST DEPT. OF HEALTH APPROVED LIST OF BACKFLOW PREVENTION ASSEMBLIES.
2. MAY BE INSTALLED BELOW GROUND IN AN APPROVED VAULT.
3. FREEZE PROTECTION IS THE RESPONSIBILITY OF THE OWNER.
4. RISERS AND ALL PIPE IN BOX TO BE BRASS, COPPER, OR PVC.
5. THE DCVA SHALL NOT BE INSTALLED WHERE IT MAY BECOME SUBMERGED.
6. A DISTRICT CROSS CONNECTION SPECIALIST SHALL INSPECT INSTALLATION OF DEVICE AND RECEIVE TEST REPORTS PRIOR TO ESTABLISHMENT OF WATER SERVICE OR APPROVAL. TEST REPORTS MUST BE SIGNED BY A CERTIFIED BACKFLOW ASSEMBLY TESTER AND IMMEDIATELY SENT TO THE DISTRICT.
7. FOR 2-1/2" TO 3-1/2" DCVA'S, USE A UTILITY VAULT 506-LA W/LOCKING STEEL DOOR NO. 55-332.P.
8. FOR 4" AND LARGER DCVA'S, USE A UTILITY VAULT 687-LA W/BASE 687-SB AND 2 LOCKING STEEL DOOR NO. 686-TL-2-332P.
9. FOR 1-INCH AND SMALLER DCVA USE CARSON INDUSTRIES "1220-12" OR EQUAL (21-1/2"X15") FOR 1 1/4-INCH TO 2-INCH DCVA USE CARSON INDUSTRIES "JUMBO BOX 1730-12" OR EQUAL (33-1/2"X20-1/2").

REV. 10/19/17

DOUBLE CHECK VALVE ASSEMBLY (DCVA) INSTALLATION

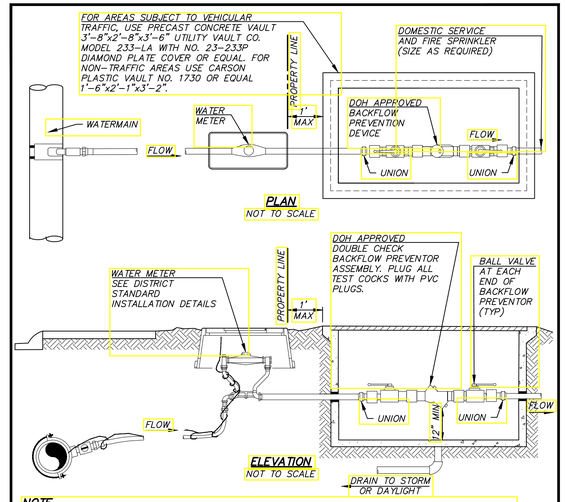

NOTE

1. NO FENCING, GATES OR OTHER OBSTACLES SHALL BE LOCATED AS TO RESTRICT ACCESS TO METER SERVICE.
2. SEE DISTRICT STANDARDS FOR WATER SERVICE METER BOX REQUIREMENTS.

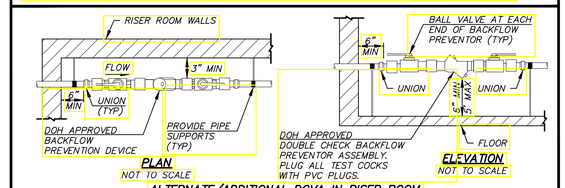

STANDARD FIRE SPRINKLER DCVA CONNECTION REV. 10/19/17

GENERAL DCDA NOTES

1. ALL CONSTRUCTION SHALL CONFORM TO THE APPROPRIATE FEDERAL, STATE, COUNTY OR DISTRICT REQUIREMENTS.
2. ALL DCDAs SHALL BE APPROVED FOR INSTALLATION WITHIN THE STATE OF WASHINGTON BY THE WASHINGTON STATE DEPARTMENT OF HEALTH. THE CONTRACTOR SHALL PROVIDE THE DISTRICT WITH SPECIFICATIONS AND SHOP DRAWINGS OF THE APPROVED DCDA PRIOR TO CONSTRUCTION.
3. THE SUPPLY LINE FOR THE DCDA SHALL BE DUCTILE IRON, A MINIMUM OF 4" DIA. AND MEET THE MATERIAL AND CONSTRUCTION REQUIREMENTS OF THE DISTRICT FOR WATER MAIN CONSTRUCTION.
4. THE CONTRACTOR SHALL INSTALL AT THE WATER MAIN A TEE AND 4" MINIMUM SIZED GATE VALVE ON ALL DCDA SYSTEMS. WET TAPS ARE ONLY ALLOWED ON EXISTING WATER MAINS.
5. A FLEXIBLE FITTING (MJ SLEEVE) SHALL BE INSTALLED WHEN ENTERING THE VAULT. THIS FITTING MAY BE OMITTED IF AN MJ BELL CONNECTION IS WITHIN 5 FEET OF THE VAULT.
6. THE CONTRACTOR SHALL LEVEL THE UTILITY VAULTS AND ADJUST THE COVER TO MATCH THE EXISTING GRADE OR 6" ABOVE GRADE IN UNIMPROVED AREAS.
7. THE CONTRACTOR SHALL INSTALL A LADDER-UP AS SHOWN IN THE DETAILS. SUBMIT PRODUCT INFORMATION FOR DISTRICT REVIEW.
8. ALL VAULTS SHALL BE INSTALLED WITH A 4" ZURN FLOOR DRAIN MODEL 551 W/ GRATING ON A 4" PVC DRAIN PIPE. THE DRAIN SHALL BE RUN TO DAYLIGHT OR A STORM DRAIN SYSTEM WITH A MINIMUM OF 4" SCHEDULE 80 PVC STORM PIPE. IF POSITIVE DRAINAGE FROM THE VAULT CANNOT BE ACHIEVED A SUMP PUMP SYSTEM WILL BE REQUIRED. SUMP PUMP SHALL BE ZOELLER "MIGHTY-MATE" AUTOMATIC SUBMERSIBLE PUMP. WRITTEN DISTRICT APPROVAL IS REQUIRED FOR SUMP PUMP SYSTEM. VAULT SHALL BE CONSTRUCTED SO BACKFLOW ASSEMBLY DOES NOT BECOME SUBMERGED.
9. FIRE DEPARTMENT CONNECTIONS SHALL BE LOCATED, SIZED AND INSTALLED PER THE REQUIREMENTS OF THE FIRE MARSHAL AND AS SHOWN ON THE FIRE MARSHAL APPROVED DRAWINGS.
10. IF REQUIRED, THE POST INDICATOR VALVE IS TO BE INSTALLED AT THE LOCATION APPROVED BY THE FIRE MARSHAL AND AS SHOWN ON THE FIRE MARSHAL APPROVED DRAWINGS.
11. ALL TEST COCKS INSTALLED WITH THE DCDA SHALL HAVE THE APPROPRIATE PLUGS INSTALLED.
12. SIZING OF THE DCDA AND THE DCDA SUPPLY LINE IS THE RESPONSIBILITY OF THE PROPERTY OWNER. WHERE THE DCDA IS INSTALLED WITHIN AN UNDERGROUND VAULT AS SHOWN IN THE DETAILS, THE DISTRICT WILL MAINTAIN AND OPERATE THE SUPPLY LINE BETWEEN THE MAIN AND DCDA VAULT. THE DCDA VAULT AND ALL ITEMS AFTERWARDS ARE THE RESPONSIBILITY OF THE PROPERTY OWNER.
13. BACKFLOW ASSEMBLY TYPE AND INSTALLATION REQUIREMENTS MAY VARY AND WILL BE AT THE DISTRICT'S DISCRETION BASED UPON WASHINGTON STATE DEPARTMENT OF HEALTH DRINKING WATER REGULATIONS RELATING TO CROSS CONNECTION WAC 246-290-010. THE DISTRICT REQUIREMENTS MAY BE EQUAL TO OR MORE STRINGENT THAN THE ABOVE CITED CODE.

PAINT SCHEDULE

EXTERIOR OF VAULT BELOW GRADE TWO COATS OF BLACK BITUMASTIC SOLUTION VAULT SHOULD BE DRIED WITH NO MOISTURE PRESENT PRIOR TO APPLICATION OF COATINGS.

PAINT INTERIOR PIPING AND VALVES ONLY, BACKFLOW ASSEMBLY SHALL NOT BE PAINTED.

1 - COAT RUST RESISTOR PRIMER RED #1013
2 - COATS SAFETY BLUE

DOUBLE CHECK DETECTOR ASSEMBLY NOTES REV. 10/06/17

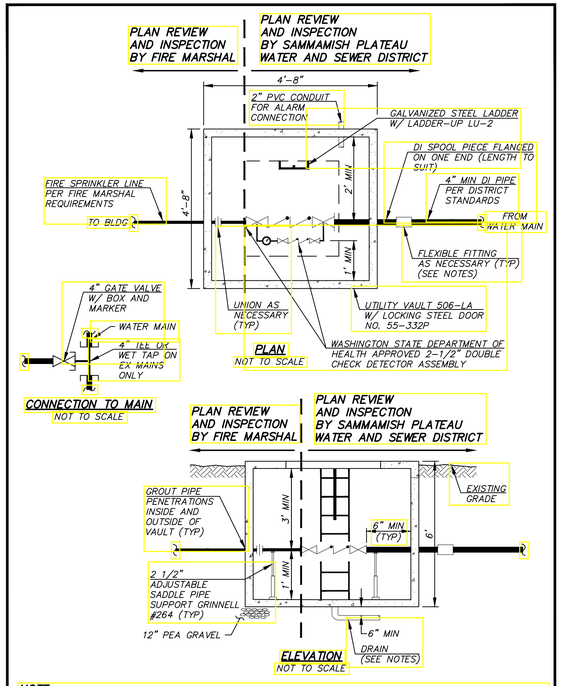

NOTE

1. FOR LOCATION OF FIRE DEPARTMENT CONNECTION (FDC) AND POST INDICATOR VALVE (PIV), IF APPLICABLE, SEE FIRE MARSHAL APPROVED DRAWINGS.
2. DISTRICT OPERATIONS AND MAINTENANCE RESPONSIBILITY OF THE WATERMAIN ENDS AT THE FACE OF THE VAULT

2-1/2" DOUBLE CHECK DETECTOR ASSEMBLY REV. 10/19/17

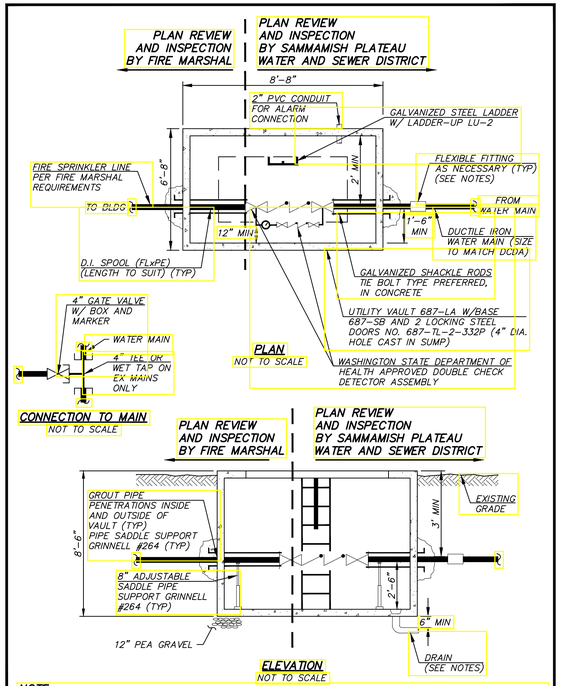

NOTE

1. FOR LOCATION OF FIRE DEPARTMENT CONNECTION (FDC) AND POST INDICATOR VALVE (PIV), IF APPLICABLE, SEE FIRE MARSHAL APPROVED DRAWINGS.
2. DISTRICT OPERATIONS AND MAINTENANCE RESPONSIBILITY OF THE WATERMAIN ENDS AT THE FACE OF THE VAULT.

4" AND LARGER DOUBLE CHECK DETECTOR ASSEMBLY REV. 10/19/17

REVISIONS	BY	DATE

Sammamish Plateau Water
1510 228th Avenue SE, Sammamish, WA 98075
425.392.6256 • spwater.org

STANDARD DETAILS

CROSS CONNECTION DETAILS

DATE: 10/24/2017
DRAWN: JTF
CHECKED: NONE
JOB NO.

SHEET 1 OF 1

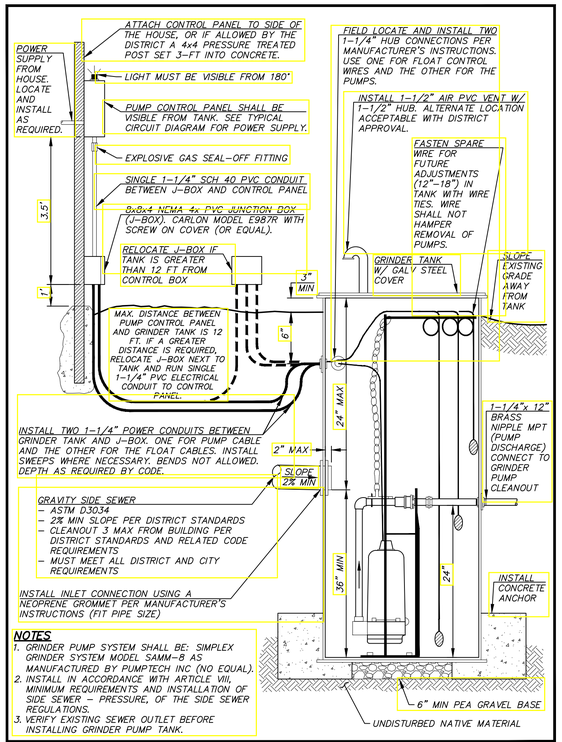

NOTES

1. GRINDER PUMP SYSTEM SHALL BE: SIMPLEX GRINDER SYSTEM MODEL SAMM–8 AS MANUFACTURED BY PUMPTECH INC (NO EQUAL).
2. INSTALL IN ACCORDANCE WITH ARTICLE VIII, MINIMUM REQUIREMENTS AND INSTALLATION OF SIDE SEWER – PRESSURE, OF THE SIDE SEWER REGULATIONS.
3. VERIFY EXISTING SEWER OUTLET BEFORE INSTALLING GRINDER PUMP TANK.

GRINDER PUMP INSTALLATION REV. 10/19/17

NOTES

1. THE GRINDER TANK SHALL BE INSTALLED WITHIN 12–FEET OF THE PUMP CONTROL PANEL. WHERE THIS DISTANCE MUST BE EXCEEDED, THE INSTALLER SHALL OBTAIN DISTRICT APPROVAL AND THEN RELOCATE THE ELECTRICAL JUNCTION BOX (J–BOX) WITHIN 1–FT OF THE GRINDER TANK AND 6–INCHES ABOVE FINISH GRADE.
2. THE TANK LOCATION SHALL BE ACCESSIBLE FOR MAINTENANCE AND REPAIR BY DISTRICT PERSONNEL.
3. TANK COVER SHALL BE APPROX 3" ABOVE FINISHED GRADE. FINISH GRADE SHALL BE FREE DRAINING AROUND AND AWAY FROM THE TANK SO THAT SURFACE WATER CANNOT POND AROUND THE STATION.
4. AIR VENT MAY BE INSTALLED IN ALTERNATIVE LOCATION WITH DISTRICT APPROVAL.
5. POSITION GRINDER PUMP TANK TO MINIMIZE NUMBER OF BENDS IN DISCHARGE PRESSURE PIPING. BENDS SHALL BE INSTALLED IN THE GRAVITY SIDE SEWER IF NEEDED.
6. NO PLANTS ARE TO BE LOCATED WITHIN 5–FT OF THE TANK. THE PROPERTY OWNER SHALL MAINTAIN A 5–FT CLEAR ZONE AROUND THE TANK.
7. THE LOCATION OF THE CONTROL PANEL SHALL BE:
   1.1. ACCESSIBLE FOR EASY MAINTENANCE AND REPAIR
   1.2. THE ALARM LIGHT MUST BE VISIBLE 180° RADIUS FROM 50–FT
   1.3. VISIBLE FROM THE TANK
   1.4. THE BOTTOM WITHIN 4.5–FT OF FINISH GRADE.
   1.5. FENCES, BRUSH, OR ANY OTHER OBJECT SHALL NOT HIDE THE LIGHT OR HINDER IN THE MAINTENANCE AND OR REPAIR OF THE SYSTEM

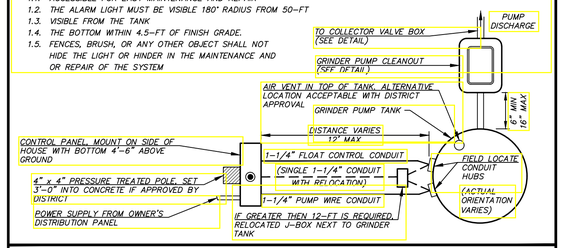

GRINDER PUMP SITE LAYOUT INSTRUCTIONS REV. 10/19/17

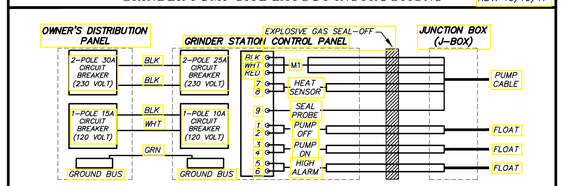

NOTES

1. PUMP AND FLOAT CABLES TO BE EXTENDED INTO AND END AT THE J–BOX USING TWO SEPARATE CONDUITS; ONE FOR THE PUMP AND ONE FOR THE FLOATS. A SINGLE CONDUIT WITH INDIVIDUAL WIRES SHALL THEN EXTENDED FROM THE J–BOX TO PUMP CONTROL PANEL.
2. RUN FROM THE J–BOX TO THE PUMP CONTROL PANEL FOUR #10 AWG THHN WIRE FOR THE PUMP (WHITE, BLACK, RED, GROUND), TWO #14 AWG THHN WIRE WITH INDIVIDUAL COLORS FOR THE PUMP SENSOR AND PROBE, AND THREE SETS OF INDIVIDUAL COLORED #14 WIRE FOR THE FLOATS.
3. AN EXPLOSIVE GAS SEAL–OFF SHALL BE INSTALLED IN THE ELECTRICAL CONDUIT JUST PRIOR TO THE PUMP CONTROL PANEL.
4. INSTALLATION MUST CONFORM TO ALL REQUIREMENTS AND REGULATIONS OF THE NATIONAL ELECTRICAL CODE. AN ELECTRICAL PERMIT AND INSPECTION IS REQUIRED WHETHER THE WORK IS PERFORMED BY THE OWNER OR A CONTRACTOR.
5. THE OWNER'S DISTRIBUTION PANEL SHALL SUPPLY ONE SEPARATE 230–V SINGLE PHASE, 30–AMP CIRCUIT FOR THE PUMP, AND ANOTHER SEPARATE 120–VOLT, 15–AMP CIRCUIT FOR THE ALARM SYSTEM.
6. THE CONTRACTOR SHALL REFER TO THE MANUFACTURER'S INSTALLATION INSTRUCTIONS FOR THE GRINDER PUMP CONTROL PANEL. THE TYPICAL CIRCUIT DIAGRAM SHOWN ABOVE IS ONLY AN EXAMPLE.

TYPICAL CIRCUIT DIAGRAM REV. 10/19/17

ITEM	MATERIAL LIST FOR GRINDER PUMP CLEANOUT AND COLLECTOR VALVE BOX DETAILS
1	1–1/4" HDPE PRESSURE PIPE SDR 11(LENGTH TO SUIT)
2	TWO STACKED CARSON JUMBO BOX (PART #1730)
3	CARSON LID (PART #1730) MARKED "SEWER"
4	1–1/4" MALE THREADED NIPPLE SCH. 80 PVC, (LENGTH TO SUIT)
5	1–1/4" X 90° BEND THREADED SCH. 80 PVC
6	1–1/4" HDPE x 316SS MPT TRANSITION COUPLING, 6–INCH
7	1–1/4" COMPRESSION COUPLING SCH. 40 PVC
8	1–1/4" UNION BALL VALVE THREADED SCH. 80 PVC
9	1–1/4" X 3" NIPPLE THREADED SCH. 80 PVC
10	1 – 1–1/4" TEE THREADED SCH. 80 PVC
11	1–1/4" BRASS SWING CHECK VALVE
12	1–1/4" X 8" NIPPLE THREADED SCH. 80 PVC
13	1–1/4" CAP THREADED SCH. 80 PVC
14	HDPE SOCKET WELDED COUPLING
15	HDPE SOCKET WELDED REDUCER SDR 11 (SIZE TO SUIT)
16	HDPE SOCKET WELDED TEE SDR 11 (SIZE TO SUIT)

NOTES

1. ALL HDPE WELDING SHALL BE MADE USING ELECTRO–FUSION.
2. WHEN BOXES LOCATED IN TRAFFIC AREAS: WHERE BOXES ARE SUBJECTED TO ANY POSSIBLE VEHICLE LOADING, REPLACE THE CARSON BOXES WITH FOGTITE #2 CONCRETE BOXES WITH FOGTITE STEEL TRAFFIC LIDS MARKED "SEWER".

TRACER WIRE NOTES

1. ALL HDPE PIPE SHALL BE INSTALLED WITH 12–GAUGE SOLID CORE WIRE. TRACER WIRE. THE WIRE SHALL BE WRAPPED AROUND THE PIPE AS PART OF THE INITIAL INSTALLATION.
2. TRACER WIRE SHALL BE LOOPED THROUGH THE COLLECTION VALVE BOX AS SHOWN IN THE DETAIL.
3. WHERE A CUT–IN CONNECTION IS MADE TO AN EXISTING LOW PRESSURE SEWER, THE TRACER WIRES SHALL BE SPLICED TOGETHER USING BUTT CONNECTORS AND SHRINK TUBING PROTECTION.
4. TRACER WIRE SHALL EXTEND FROM THE GRINDER PUMP CLEANOUT TO THE COLLECTION VALVE BOX AS SHOWN IN THE DETAILS.

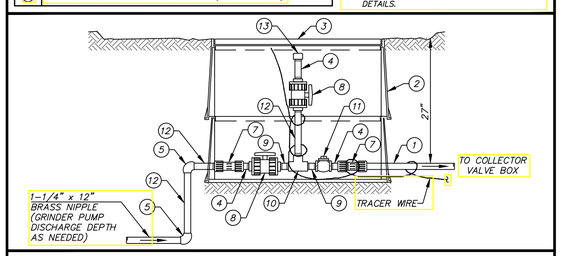

GRINDER PUMP CLEANOUT REV. 10/19/17

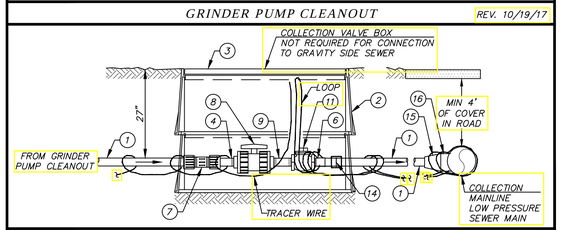

COLLECTION VALVE BOX REV. 10/19/17

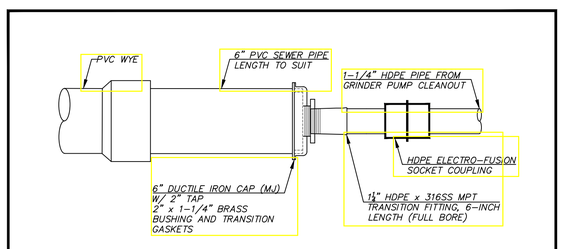

PRESSURE LINE CONNECTION REV. 10/19/17

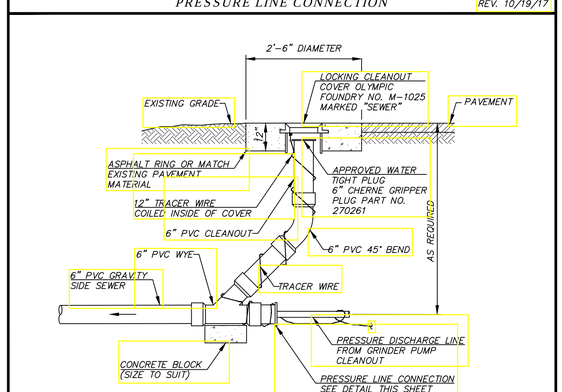

NOTES

1. ALL PVC FITTINGS SHALL BE GASKETED.
2. NO COLLECTION VALVE BOX REQUIRED WHEN CONNECTING TO A GRAVITY SIDE SEWER.

REV. 10/19/17

PRESSURE LINE CONNECTION TO GRAVITY SANITARY SEWER

SAMMAMISH PLATEAU WATER AND SEWER DISTRICT

The following is a portion of the Sammamish Plateau Water and Sewer District's Side Sewer Regulations for regulating the use of public and private sewers and drains, private sewage disposal, the installation and connection of sewers to buildings and the discharge of waters and wastes into the District's sanitary sewer system. All Contractors performing work on the District's Sewer System, which includes gravity sewer mains, low and high pressure sewer mains, side sewers, and grinder pump systems, and manholes, shall obtain a copy of these regulations prior to construction. All work shall conform to the District's Side Sewer Regulations.

ARTICLE VIII

MINIMUM REQUIREMENTS AND INSTALLATION OF SIDE SEWERS - PRESSURE -

8.01 ADDITIONAL CODES AND REQUIREMENTS

All pump installations must meet all building, plumbing, and electrical codes, and shall have the District's approval prior to installation. Please also refer to the District's Standard Grinder Pump Details for the additional installation requirements.

8.02 PIPE

Unless otherwise called for, side sewer pipe shall be high-density polyethylene plastic pipe (HDPE SDR 11) and meet the following specifications.

A. Base Resin: Conform to all requirements of ASTM D 48, Type III, Class C, Category 5, Grade P34, with a PPI rating of PE 3408.

B. Melt Index: Less than 0.25 grams/10 min. as determined by ASTM D 1238, Condition E.

C. Environmental Stress Check Resistance: No cracks after 192 hours at 100 C as determined by ASTM D 1693, Condition C.

D. Rating: Long-term hydrostatic strength of 1450 psi and hydrostatic design stress of 730 psi as determined by ASTM D 2837.

E. Working Pressure Rating: 145 psi.

F. Laboratory Test Requirements: Withstand without failure a minimum burst pressure of 560 psi when applied in 60 to 70 seconds with water at 730 F. Test in accordance with ASTM D 1599. Test one percent but not more than three lengths.

G. Unless otherwise required by the District, bedding material is not required for installation of HDPE low pressure sewer pipe.

8.03 FITTINGS AND JOINTS

A. PVC Pipe and Fittings
Threaded, schedule 80 PVC pipe and fittings shall only be installed where PVC parts are required in the District's Standard Details. Compression couplings shall only be allowed as part of the Grinder Pump Cleanout and Collection Valve Box as shown in the District's Standard Details.

B. HDPE Pipe and Fittings
1. All HDPE pipe and fittings shall be SDR 11 with electro-fusion welded socket joints.
2. Butt welding shall only be allowed when join two segments of pipe during the installation of the 1-1/4-inch discharge line
3. Connection of HDPE pipe to any threaded fitting as shown in the District's Standard Details will be with a full bore HDPE X 316 stainless steel Transition fitting, 6-inches in length. Compression couplings are only allowed where shown in the Grinder Pump Cleanout and Collection Valve Box details.

C. Grinder Pump Discharge Piping
A 1-1/4-inch diameter threaded brass nipple, 12-inches in length, shall be installed on the grinder tank's discharge hub.

D. The Contractor that performs all HDPE joints shall be certified in electro-fusion socket-welding techniques.

8.04 TRACER WIRE

All piping shall be installed with tracer wire for locating purposes. Tracer wire shall be insulated 12-gauge, solid core wire wrapped around the pipe. With new low pressure sewer main construction the wire shall be installed as part of the sewer main and shall be looped through all collection valve boxes as shown in the Collection Valve Box detail. Where a cut-in connection is made to an existing low pressure sewer, the wire shall be spliced together using butt connectors and shrink tubing protection. Tracer wire shall extend from the Collection Valve Box to the Grinder pump Cleanout as shown in the District's Standard Details.

8.05 CONNECTION TO A LOW PRESSURE SANITARY SEWER

All side sewer connections to a low pressure sewer main shall require a Collection Valve Box installed at the property line in accordance with the District's Standard Details.

Where there is not an existing connection a tee shall be cut into and electro-fusion socket welded to the existing pressure sewer main, and the 1-1/4-inch HDPE pressure side sewer extended to the property line at an angle perpendicular to the sewer main.

8.06 CONNECTION TO GRAVITY SANITARY SEWER

Connections to an existing gravity sanitary sewer shall require a 6-inch PVC gravity side sewer. If necessary, the Contractor shall install a gravity side sewer as discussed above in Article VII, and in conformance with the District's Standard Details.

The transition between the HDPE pressure side sewer and the gravity side sewer shall require the installation of a Pressure Line Connection to Gravity Sanitary Sewer connection as shown in the District's Standard Details, including installation of the 6-inch cleanout assembly at the property line. The typical Collection Valve Box will not be required as part of the connection to a gravity sanitary sewer.

8.07 CONNECTION INTO GRAVITY MANHOLE

Where a HDPE pressure side sewer is connecting into a gravity manhole, the side sewer contractor shall install an inside drop connection on those manholes deeper than 6 feet. In manholes less then 6 feet deep, the connection must match the crown elevation of the outfall pipe.

8.08 BACKFILLING AROUND VAULTS AND VALVE BOXES

Vaults and Valve Boxes shall be placed on backfill that has been compacted to a minimum of 90% of maximum theoretical density. Backfilling shall be performed carefully so that no damage is done to pipe entering or exiting the vault or valve or to the vault or valve box. The District may direct the contractor to use special backfill techniques when it deems necessary.

8.09 GRINDER PUMP CLEANOUT

A Grinder Pump Cleanout shall be installed within 16-inches of the grinder pump tank, in accordance with the Grinder Pump Cleanout Detail and Grinder Pump Installation Notes. In accordance with the District's Standard Details, the cleanout shall be connected to the grinder pump tank using a brass nipple threaded into the pump discharge hub, and connected to the Collection Valve Box, or the Pressure Line Connection, using 1-1/4-inch HDPE pressure pipe installed with the minimum cover shown in the specific details.

8.10 GRINDER PUMP SYSTEM

The grinder sewer pump system shall be a model SAM-8 Simplex Grinder System built for the Sammamish Plateau Water and Sewer District by PumpTech Inc., 12012 SE 32nd Street, Suite 2, Bellevue, WA. 98005, (425) 644-8501.

The SAM-8 Simplex Grinder package shall be as shown in the Grinder Pump Installation Detail and include the following items:

A. Hydromatic HPG 200 M2-2 Series Hydro-Grind Sewage Pump with 20-feet of power cord.
B. Stainless steel guide rail system
C. "Hydromatic Simplex Q" packaged control system for a simplex station consisting of the control panel, alarm light and alarm horn. The panel shall have a 2-pole, 25-amp, 230-volt breaker for the pump, and a separate 1-pole, 10-amp, 120-volt breaker for the alarm. The panel shall be supplied with two exterior alarm buttons; 1) "Push to Test" and 2) "Push to Silence".
D. Three SJE Rhombus Sensor Float Control Switches, Part Number 1002170, with 30-feet of cable (30SWENO - Weighted Externally, Normally Open).
E. A 23"x60" fiberglass grinder pump tank supplied with galvanized steel cover (#11 gauge), stainless steel hold-down bolts, and an anti-flotation flange. The tank will also be provided with a 1-1/4-inch FPT hub connection for the pump discharge piping.
F. The package shall be provided with the following loose items that are to be field located and installed: two (2) 1-1/4" hub connections (one of the pump controls, one for the float controls), a 1-1/2" PVC vent, a 1-1/2-inch hub connection for the vent, and a neoprene grommet for the building side sewer (size as required).
G. The tank shall be supplied with a pump guide rail system for removal of pump unit, as manufactured by PumpTech, Inc. All exposed surfaces on guide rail system shall be stainless steel including the lift chain.
H. All valves and piping shall consist of hydraulically sealed discharge flanges.
I. The package system shall meet the requirements of the Washington State Department of Labor & Industries, Division for Residential grinder pump systems.

8.11 GRINDER PUMP INSTALLATION

A. Contact the District for a Preconstruction Conference before installation of any work or equipment associated with the grinder pump system. The Contractor shall determine the depth of the existing building's sewer discharge before the Preconstruction Conference.
B. There shall be no additional junction boxes, splices or changes made once the system has been installed and inspected by District personnel. Anyone tampering with the approved system shall be liable to the District for any expense, loss, damage, cost of inspection or cost of correction incurred by the District, plus a penalty not to exceed $1,000.00.
C. The Contractor shall review the proposed grinder pump site layout with the District prior to installation of any work.
D. The grinder pump tank and control panel shall be installed for easy access in performing all maintenance and repair activities.
E. The grinder pump tank shall be installed so that the tank cover is approximately 3-inches above finish grade. Finish grade shall be free draining around and away from the tank so that surface water cannot pond around the station. No plants, fences, or other obstructions are to be located within 5 feet of the tank and the valve boxes, and the property owner shall maintain a 5 foot clear zone around the tank.
F. Position the grinder pump tank to minimize the number of bends in the discharge pressure piping. Any necessary bends should be installed in the gravity portion of the side sewer.
G. All tank penetrations shall be reviewed with the District prior to installation. All penetrations will be made with a hole saw or approved equal to give a smooth symmetrical edge of the proper size and the lip shall be filed smooth.
H. The Contractor shall field locate and install the two 1-1/4-inch hub connections for the electrical conduits after reviewing the proposed installation with the District. The hubs shall be installed no lower then 9-inches from the top of the tank.
I. The Contractor shall review the installation of the Vent pipe with the District prior to installation. With the District's approval the vent can be installed away from the tank
J. The Pump Control Panel shall be attached to the Owner's house, or with the District's approval, attached to a 4x4 pressure treated post set 3-feet into concrete. The panel shall be installed so that:
   1. The bottom of the panel is 4.5 feet above finished grade,
   2. Is visible from the tank,
   3. Is within 12-feet of the grinder pump tank, unless otherwise approved by the District.
   4. The alarm light is visible from 50-feet and has a 180-degree visual radius.
   5. Fences, brush, or any other object shall not hide the light or hinder in the maintenance and/or repair of the system.
K. The grinder pump system requires an electrical supply of 230-volt single-phase power with a 30-amp breaker for the pump, and a separate 110-volt, 15-amp breaker for the alarm system. See Typical Circuit Diagram for wiring between the Owner's Distribution Panel and the Grinder Pump Control Panel. An electrical junction box shall be installed under the Pump Control Panel for landing of the float control and pump wires.
L. Where the distance between grinder pump tank and the Pump Control Panel must be greater than 12-feet, the electrical junction box shall be installed on a 4x4 pressure treated post next to the grinder pump. Such installation shall not interfere with the proper maintenance or repair of the system.
M. A single PVC electrical conduit shall be installed between the electrical junction box and the Pump Control Panel.
N. An explosive gas seal-off fitting shall be installed in the electrical conduit just prior to the Pump Control Panel.
O. The power and float control wires between the grinder pump and the electrical junction box shall be installed in two separate PVC conduits in accordance with the Standard Details.
P. No bends will be allowed in the electrical conduit. Install sweeps where necessary.

ARTICLE X

INSPECTION AND TESTING OF SIDE SEWER - PRESSURE

10.01 CALL FOR INSPECTION

Arrangements for inspection of a Grinder Pump installation shall be made with the District 24 hours in advance. The District reserves the right to set the time for inspections. Side sewer permits must be obtained from the District prior to scheduling an inspection. All inspections will be performed during normal working hours. Cancellations must be made a minimum of one hour before the scheduled appointment. Additional inspection may result in additional fees.

10.02 TESTING OF FINAL INSTALLATION - GRINDER PUMP

Side sewers using pump systems shall be tested at 50 psig, or as directed by the District for actual conditions. Following is the procedure used for testing the discharge line:

a) Close the in-line ball valve in the grinder valve box.

b) Open the riser ball valve in the grinder valve box.

c) Close the ball valve at the collector valve box for the street connection.

d) Pressurize with water or air, introduced at the low end, to test for leakage.

e) Hold the required pressure for ten minutes. Allowable leakage = 0

10.03 AS-BUILT DRAWINGS

As-built drawings shall be prepared by the Contractor and checked by the District Inspector in conjunction with the Permit, and shall show the as-built location of the side sewer installation.

REVISIONS	BY	DATE

Sammamish Plateau Water
1510 228th Avenue SE, Sammamish, WA 98075
425.392.6256 • spwater.org

STANDARD DETAILS

GRINDER PUMP DETAILS

DATE: 10/24/2017
DRAWN: JTP
CHECKED: NONE
JOB NO.

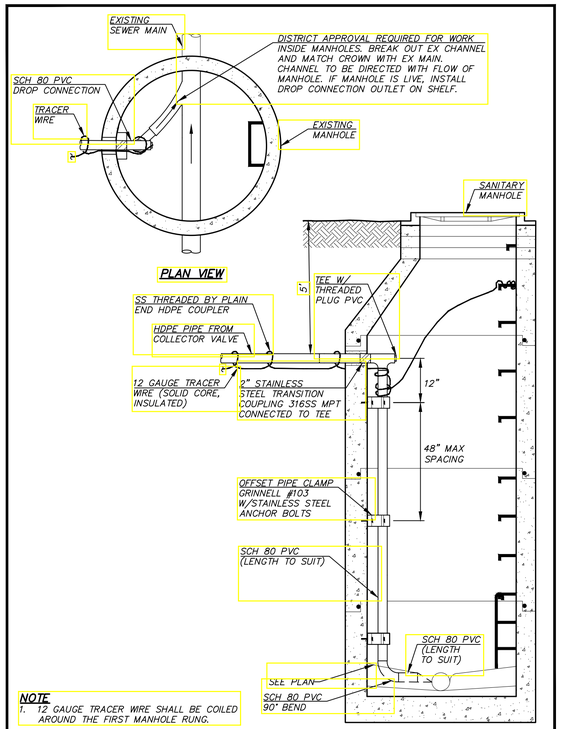

NOTE
1. 12 GAUGE TRACER WIRE SHALL BE COILED AROUND THE FIRST MANHOLE RUNG.

PRESSURE SEWER DROP CONNECTION — REV. 10/19/17

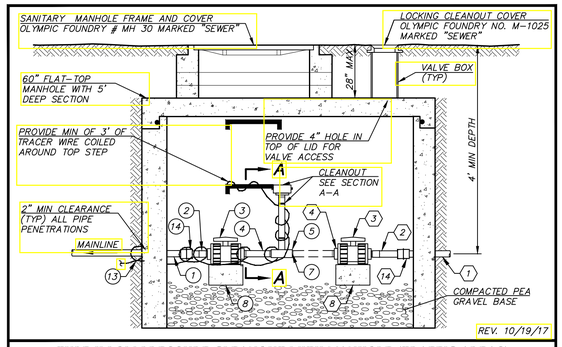

REV. 10/19/17

TYPE II LOW PRESSURE CLEANOUT WITH MANHOLE (TRAFFIC AREAS)

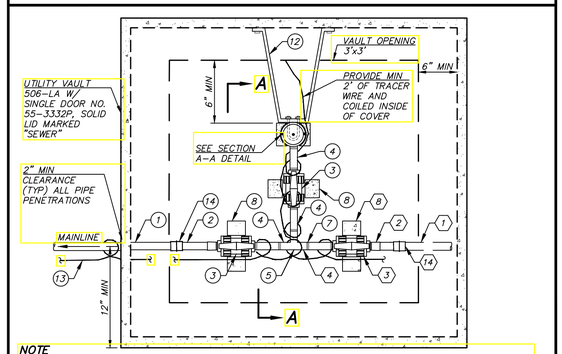

NOTE
1. MATERIAL LIST PROVIDED ON THE DETAIL TITLED LOW PRESSURE CLEANOUT NOTES AND MATERIAL LISTS.

REV. 10/19/17

TYPE I LOW PRESSURE CLEANOUT WITH MANHOLE (NON-TRAFFIC AREAS ONLY)

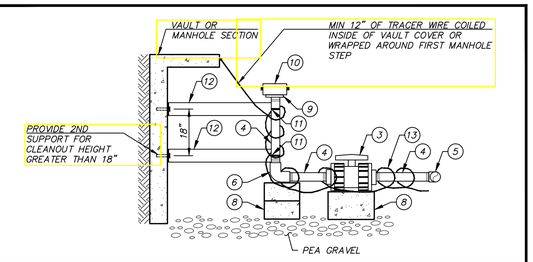

SECTION A-A FOR LOW PRESSURE CLEANOUTS — REV. 10/19/17

LOW PRESSURE CLEANOUT NOTES
1. THE PIPING SYSTEM INSTALLED IN A TYPE I AND TYPE II CLEAN OUT IS THE SAME. THE ONLY DIFFERENCE BETWEEN THE TWO TYPES IS A TYPE I REQUIRES A PRE-MANUFACTURED VAULT, WHILE A TYPE II REQUIRES A FLAT-TOP MANHOLE SECTION.
2. LOW PRESSURE CLEANOUTS SHALL BE INSTALLED AT A MINIMUM OF EVERY 500-FT AND AT THE END, OR TERMINUS, OF THE LOW PRESSURE SEWER MAIN.
3. THE MANHOLE SECTION AND/OR VAULT SHALL BE INSTALLED LEVEL AND SHALL DRAIN TO DAYLIGHT OR STORM SYSTEM. THE COVER AND/OR LID SHALL BE ADJUSTED TO GRADE.
4. WHERE THE CLEAN OUT IS INSTALLED AT THE TERMINUS OF A MAIN, THE PVC PLUG(ITEM 7) SHALL BE INSTALLED INTO THE END OF THE PVC TEE (ITEM 5), ALLOWING FOR FUTURE MAIN EXTENSIONS.

MATERIAL LIST
1. ALL PARTS SHALL BE THREADED PVC, SCHEDULE 80, WITH THE SAME DIAMETER AS THE SEWER MAIN (EXCEPT AS NOTED).

(X) MATERIALS REQUIRED FOR LOW PRESSURE CLEANOUT

(X) MATERIALS REQUIRED FOR EXTENSION OF SEWER MAINLINE AS PART OF CURRENT OR FUTURE WORK

ITEM	ITEM NAME
1	HDPE PRESSURE PIPE SDR 11
2	HDPE x 316SS MPT TRANSITION FITTING, 6-INCH LENGTH (FULL BORE) DIAMETER SHALL BE SAME SIZE AS THE SEWER MAINLINE
3	UNION BALL VALVE, PVC
4	NIPPLE, PVC
5	TEE, PVC
6	90° ELBOW, PVC
7	PLUG, PVC (MIP)
8	CONCRETE BLOCK - (SIZE TO SUIT)
9	MIP X 2 1/2" MNST SWIVEL BRASS HOSE ADAPTOR (PROVIDE REDUCER AS REQUIRED)
10	2 1/2" FNST CAP W/CHAIN
11	ALUMINUM U-BOLTS BOLTED TO SUPPORTS WITH STAINLESS STEEL NUTS
12	1-1/2" X 3/16" ALUMINUM BAR, BENT AS SHOWN IN TYPE I CLEANOUT DETAIL AND ATTACHED TO CONCRETE WALL WITH STAINLESS STEEL ANCHOR BOLTS
13	TRACER WIRE, INSULATED 12-GAUGE SOLID CORE WIRE (WRAP TRACER WIRE AROUND ALL PIPES DURING INSTALLATION)
14	HDPE ELECTRO-FUSION SOCKET WELDED COUPLING

REV. 10/19/17

LOW PRESSURE CLEANOUT NOTES AND MATERIAL LIST

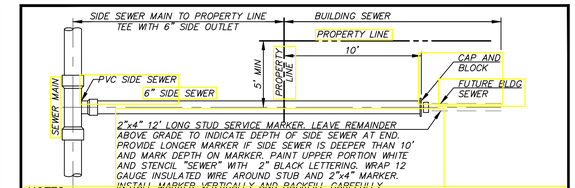

NOTES
1. MAXIMUM DEPTH OF SIDE SEWER AT END IS 10' UNLESS ADDITIONAL DEPTH IS NEEDED TO PROVIDE GRAVITY SEWER SERVICE.
2. FOR MULTI-FAMILY AND/OR COMMERCIAL PROJECTS, SIDE SEWERS MAY BE EXTENDED, AT THE DISTRICT'S DISCRETION, FROM THE EDGE OF THE ROAD OR PROPERTY LINE TO WITHIN 3 FEET OF THE BUILDING FOUNDATION.

SINGLE SIDE SEWER — REV. 10/19/17

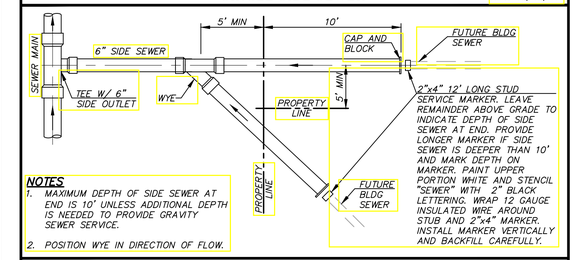

NOTES
1. MAXIMUM DEPTH OF SIDE SEWER AT END IS 10' UNLESS ADDITIONAL DEPTH IS NEEDED TO PROVIDE GRAVITY SEWER SERVICE.
2. POSITION WYE IN DIRECTION OF FLOW.

DOUBLE SIDE SEWER — REV. 10/19/17

NOTES
1. CONNECTION OF NEW SIDE SEWER TO EXISTING MAIN MAY USE EITHER:
   - CUT IN TEE W/ PVC SLIP COUPLINGS.
   - ROMAC SST STAINLESS STEEL TAPPING SLEEVE W/ FL X MJ ADAPTER AND GASKET SIZED FOR D3034 PVC SIDE SEWER. ROMAC SIDE SEWER SADDLE, MODEL CB, IS NOT ALLOWED.
2. UNLESS OTHERWISE SHOWN ON PLAN, MINIMUM COVER FOR SIDE SEWERS (WHICHEVER IS LOWER):
   - 18" - PRIVATE PROPERTY
   - 3' - AT PROPERTY LINE
   - 2'-6" IF CROSSING A DITCH IN PUBLIC RIGHT OF WAY LOWER THAN THE LOWEST HOUSE ELEVATION

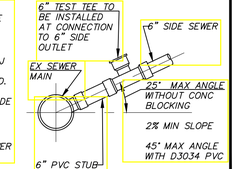

SIDE SEWER DETAILS — REV. 10/19/17

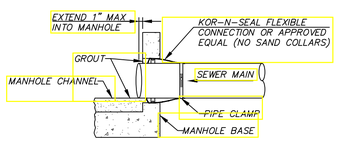

SANITARY MANHOLE INLET CONNECTION — REV. 10/19/17

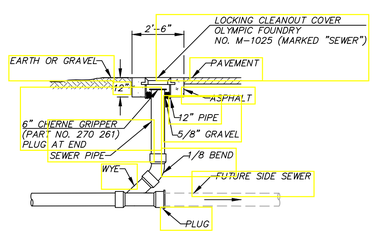

SIDE SEWER CLEANOUT — REV. 10/19/17

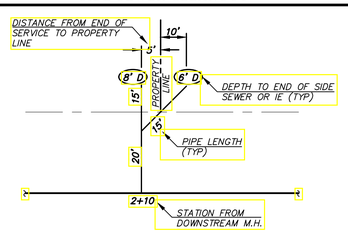

SIDE SEWER AS-BUILT — REV. 10/19/17

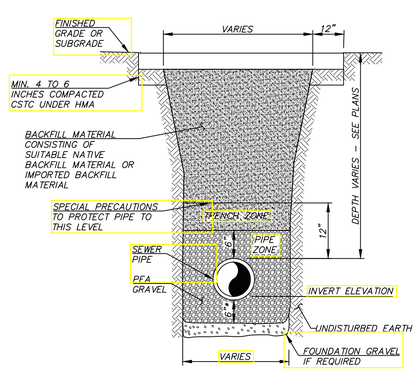

NOTES
1. * FOR PIPE DEEPER THAN 18', PIPE BEDDING SHALL EXTEND 18" ABOVE CROWN OF PIPE
2. NOT TO SCALE

SANITARY SEWER TRENCH SECTION — REV. 10/30/17

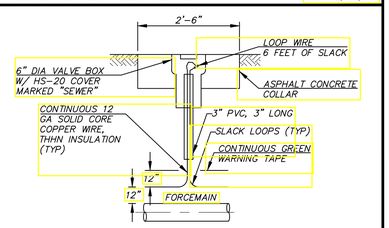

NOTES
1. LOCATE TEST BOX OVER CENTERLINE OF FORCEMAIN.
2. PROVIDE TEST BOX AT 500' INTERVALS AND AT BENDS.
3. PROVIDE 12" WIRE LOOP INSIDE VALVE BOX (TYP).
4. INLINE CONNECTORS ON WIRE ARE NOT ALLOWED.

FORCEMAIN TRACER WIRE LOCATE STATION — REV. 10/19/17

REVISIONS	BY	DATE

Sammamish Plateau Water
1510 228th Avenue SE, Sammamish, WA 98075
425.392.6256 • spwater.org

STANDARD DETAILS
GRINDER PUMP DETAILS

DATE: 10/24/2017
DRAWN: JTF
CHECKED: NONE
JOB NO.

SHEET 2 OF 2

Appendix G

District Resolutions (GFCs, LFCs, ULIDs, Fees, Rates)

This page intentionally left blank.

SAMMAMISH PLATEAU WATER & SEWER DISTRICT
KING COUNTY, WASHINGTON

RESOLUTION NO. 4800

RESOLUTION OF THE BOARD OF COMMISSIONERS OF SAMMAMISH PLATEAU WATER AND SEWER DISTRICT, KING COUNTY, WASHINGTON, ADOPTING REVISED WATER GENERAL FACILITY CONNECTION CHARGES AND REPEALING RESOLUTION NO. 4701.

WHEREAS, RCW 57.08.005(11) authorizes the Sammamish Plateau Water and Sewer District ("District") to charge property owners seeking connection to the District's water and sewer systems, as a condition to granting the right to so connect, in addition to the cost of the connection, such reasonable connection charges as the District Board of Commissioners shall determine to be proper in order that those property owners shall bear their equitable share of the cost of the systems; and

WHEREAS, the District reserves the right, pursuant to Paragraph 5.(A)(2) of the Application and Agreement to Construct Extension(s) to Water and/or Sewer Systems(s) of the District's Developer Extension Agreement, to revise the District's water and sewer general facility connection charges and that parties with pending Developer Extension Agreements are required to pay such revised water and sewer general facility connection charges; and

WHEREAS, on July 10, 2017, the District Board of Commissioners adopted Water General Facility Connection Charges by Resolution No. 4701 applicable to all parties seeking to connect their property to the District's water system; and

WHEREAS, District staff by written report dated July 16, 2018, recommended that the District's water general facility connection charges be revised for all customer classifications so that those property owners seeking connection to the District's water system shall bear their equitable share of the cost of that system; and

WHEREAS, the District Board of Commissioners having considered such staff recommendations related to the proposed revision to the District's water general facility connection charges and having held a public hearing on July 16, 2018, for public comment on such proposed revisions pursuant to public notice regarding such hearing published in the Seattle Times on July 1 and July 8, 2018, and the District Board of Commissioners having considered such recommendations and public comments; and

WHEREAS, pursuant to Chapter 82.16 RCW, the District is required to pay a public utility excise tax ("Excise Tax") to the State of Washington on gross water and sewer revenues, including the collection and receipt of the water general facility connection charges by the District, and the District desires to include collection of the Excise Tax with payment of the water general facility connection charges which shall be in addition to the water general facility connection charges adopted by this resolution; and

WHEREAS, the District Board of Commissioners now desires to adopt revised uniform water general facility connection charges connection charges; now, therefore,

BE IT RESOLVED, by the Board of Commissioners of Sammamish Plateau Water & Sewer District, King County, Washington, as follows:

1. The following uniform water general facility connection charges are hereby adopted and shall be assessed against owners of such real property seeking connection to or increased water service (such as a new service or change in service) from the District's water system as follows:

A. <u>All Development Except Single Family Residential with Fire Sprinklers.</u> The water general facility connection charges for all development, except single family residential with fire sprinklers, shall be determined by water meter size as follows:

Meter Size	Previous General Facility Connection Charge	**New General Facility Connection Charge**
3/4"	$ 5,165.00	**$ 5,342.00**
1"	$ 12,912.00	**$ 13,355.00**
1 1/2"	$ 25,823.00	**$ 26,710.00**
2"	$ 41,316.00	**$ 42,736.00**
3"	$ 82,632.00	**$ 85,472.00**
4"	$ 129,113.00	**$ 133,550.00**
6"	$ 258,225.00	**$ 267,100.00**
8"	$ 413,160.00	**$ 427,360.00**
10"	$ 593,917.00	**$ 614,330.00**

B. <u>Single Family Residential with Fire Sprinklers:</u> In determining the base water general facility connection charge for a single family residential connection with fire sprinklers, the general facility connection charge owing shall be based on the meter size which would be required without fire sprinklers. The four factors listed below shall be reviewed to determine the water meter size required without fire sprinklers.

(i) The UPC meter size requirements based on fixture count relating to the size of the structure being service;

(ii) District standards in effect at the time of the application for water meter;

(iii) Use of in-ground irrigation; and

(iv) Private service lines in excess of 200 feet in length where the pressure is less than 55 PSI.

The District shall assess the water general facility connection charge for the meter size required without fire sprinklers although the owner of the real property to receive water service may

be required by the District to have a larger water meter due to the presence of fire sprinklers in the residential unit.

2. The water general facility connection charges referenced herein shall be reviewed periodically and may be adjusted as necessary to include the actual cost to construct facilities planned for construction within the next ten years as contained in the District's adopted Water Comprehensive Plan.

3. The provisions of this resolution shall be effective the 17th day of July, 2018.

4. All prior and existing District resolutions, policies, and procedures including Resolution No. 4701 relating to the District's existing water general facility connection charges are hereby revised, modified, and superseded to be in accordance with the charges set forth herein.

ADOPTED by the Board of Commissioners of Sammamish Plateau Water and Sewer District, King County, Washington, at a regular open public meeting held on the 16th day of July 2018.

Individual Commissioner's Vote on this Resolution:

Approved:	✓
Opposed:	
Abstained:	
Absent:	
Approved:	✓
Opposed:	
Abstained:	
Absent:	
Approved:	
Opposed:	
Abstained:	
Absent:	
Approved:	
Opposed:	
Abstained:	
Absent:	
Approved:	
Opposed:	
Abstained:	
Absent:	

Lloyd Warren, President and Commissioner

Mahbubul Islam, Vice President and Commissioner

Mary Shustov, Secretary and Commissioner

Tom Harman, Commissioner

Ryika Hooshangi, Commissioner

This page intentionally left blank.

SAMMAMISH PLATEAU WATER & SEWER DISTRICT
KING COUNTY, WASHINGTON

RESOLUTION NO. 4802

RESOLUTION OF THE BOARD OF COMMISSIONERS OF SAMMAMISH PLATEAU WATER AND SEWER DISTRICT, KING COUNTY, WASHINGTON, ADOPTING A STANDARD WATER LOCAL FACILITY CHARGE OF $368.00 PER LINEAL FOOT EFFECTIVE JULY 17, 2018 AND REPEALING RESOLUTION NO. 4703.

WHEREAS, RCW 57.08.005(11) authorizes the Sammamish Plateau Water and Sewer District ("District") to charge property owners seeking connection to the District's water and sewer systems, as a condition to granting the right to so connect, in addition to the cost of the connection, such reasonable connection charges as the District Board of Commissioners shall determine to be proper in order that those property owners shall bear their equitable share of the cost of the systems; and

WHEREAS, it has been and now is the practice of the District to charge a Standard Water Local Facility Charge (previously known as a "Connection Charge-in-Lieu of Assessment" and a "Regular Water Local Facility Connection Charge") and collect the same from the owners of properties seeking to connect to District water facilities for which the property owner or their predecessor has not paid their equitable share of the cost by assessment in a utility local improvement district, developer extension or otherwise; and

WHEREAS, the District previously adopted Resolution No. 4703 establishing a uniform District-wide standard water local facility connection charge ("Water Local Facility Charge" or "Local Facility Charge") of $356.00 per frontal foot within the District's service area for public works projects that are not constructed as utility local improvement district projects, developer extensions, or neighborhood water projects;

WHEREAS, Resolution No. 3203 provided that the District shall update the Standard Water Local Facility Charge effective July 1 of each year to reflect the current average cost of water public works projects; and

WHEREAS, District staff recommends that the Water Local Facility Charge should be due and payable at the time a property owner makes application to the District for water service and to connect their property to the District's water system; and

WHEREAS, there are areas of the District that do not have properties on both sides of the installed water facilities which will or may connect to such facilities, making it necessary to recover the costs of the facilities from only one property; and

WHEREAS, the District desires to apply the Water Local Facility Charge in a manner consistent with neighborhood conditions; and

WHEREAS, the District Board of Commissioners, pursuant to a public notice published in the *Seattle Times* on July 1 and July 8, 2018, held a Public Hearing on July 16, 2018 on the proposed revision and adoption of water local facility charges; and having received and considered at the hearing staff reports and recommendations regarding the adoption of such charges and also having received and considered any public comments thereon; and

WHEREAS, pursuant to Chapter 82.16 RCW, the District is required to pay a public utility excise tax ("Excise Tax") to the State of Washington on gross water and sewer revenues, including the collection and receipt of water local facility connection charges by the District, and the District desires to include collection of the Excise Tax with payment of the water local facility connection charges which shall be in addition to the water local facility connection charges adopted by this resolution; and

WHEREAS, the District Board of Commissioners now desires to restate, update and revise such uniform water local facility connection charges previously adopted by Resolution No. 4605; now, therefore,

BE IT RESOLVED, by the Board of Commissioners of Sammamish Plateau Water & Sewer District, King County, Washington, as follows:

1. A Standard Water Local Facility Charge is hereby approved and established of $368.00 per lineal foot which is the average cost of current Utility Local Improvement District and Public Works projects for eight inch watermains and other appurtenances; provided, this charge may be reduced to $184.00 per lineal foot if the District determines that there are properties on each side of the water main that may connect to the water main.

2. The District shall collect such charge from the property owner at the time a property owner makes application to connect a property to the District's water system.

3. If the application and assessment of the front footage charge results in an assessment which in the opinion of the District General Manager is inequitable, the Standard Water Local Facility Charge may be assessed at $48,576.00 per acre, for that portion of the property which is or would be within 330 feet of the water main. This charge may be reduced to $24,288.00 per acre if the District determines that there are properties on each side of the water main that may connect to the water main.

4. To insure fairness when assessing the Local Facility Charge the District General Manager may elect to use the procedure outlined in ***Exhibit A*** attached hereto.

5. The District shall update the Standard Water Local Facility Charge in July of each year either by the percentage of increase in the average annual 20-city-average of the *Engineering News Record* Construction Cost Index or by the average cost of recent District water projects, as determined by the District, to reflect the current average cost of water public works projects.

6. The provisions of this resolution shall be effective the 17th day of July, 2018.

7. All District resolutions, policies and procedures, including Resolution No. 4703 are hereby rescinded, modified and/or superseded to be in accordance with the policies set forth in this resolution.

ADOPTED by the Board of Commissioners of Sammamish Plateau Water and Sewer District, King County, Washington, at a regular open public meeting held on the 16th day of July 2018.

Individual Commissioner's Vote on this Resolution:

Approved: ✓
Opposed:
Abstained:
Absent:

Lloyd Warren, President and Commissioner

Approved: ✓
Opposed:
Abstained:
Absent:

Mahbubul Islam, Vice President and Commissioner

Approved: ✓
Opposed:
Abstained:
Absent:

Mary Shustov, Secretary and Commissioner

Approved: ✓
Opposed:
Abstained:
Absent:

Tom Harman, Commissioner

Approved:
Opposed:
Abstained:
Absent:

Ryika Hooshangi, Commissioner

EXHIBIT A

LOCAL FACILITY CHARGE

The District Standard Local Facility Charge Resolutions state a front footage charge and an area charge. This raises a question as to when to use front footage and when to use area.

The purpose of the local facility connection charge is to collect the fair charge for the existing watermains and sewermains adjacent to a person's property; or to collect sufficient monies to pay for the installation of the permanent watermains and sewermains to be installed adjacent to the customer's property at a future date. In the first case the mains were installed by a developer or the District, in the second the customer is beyond permanent facilities.

The basis of the local facility connection charge is the cost, on a per foot basis, to install an 8" diameter watermain with appurtenances or an 8" diameter sewermain with appurtenances. These costs are based on recent District utility local improvement districts, public works projects and developer extensions. The area charge is calculated by assuming the area of benefit extends 330 feet from the watermain or sewermain. The basis for these assumptions is the King County Fire Hydrant Ordinance, the King Country On-Site Wastewater Regulations, and the subdivision requirements for road locations.

Our standard procedure is to use the front footage method, but sometimes the strict application of the front footage formula results in an unfair charge. A couple of examples are corner lots and pie shaped lots. Corner lots would always pay more for the same benefit as their neighbors and pie shaped lots could be paying more or less than their neighbors depending on whether the apex is away from or towards the watermain or sewermain. To overcome the unfairness of the front footage charge the area basis can be used if the lot is 330 feet or more deep. If the lot is less than 330 feet deep, basing the local facility connection charge on area will not generate sufficient revenues to pay for the watermain or sewermain, nor will it generate enough revenue if the mains will be spaced at closer than 660 foot intervals.

If the property is fronting an existing main, the local facility charge should be collected based on front footage regardless of the size of the lot, if the property would have been assessed on this basis in a utility local improvement district. If the property is very large and will front a future main, collect for a one acre building site and file a Notice and Agreement of Future Charges on the property with the King County Recorder's office.

The biggest problem facing the staff has been the determination of charges on corner lots where the main has been installed on one street, but an extension is required on the other side. If the District assumes that the first 330 feet of property has been paid for, payment for the first 330 feet of pipe on the side of the property needs to be accounted for. Where the mains are required for a short plat, plat, multi-family, commercial, public or other development, the developer is required to pay for the mains all around the property. When the property owner has been seeking water and/or sewer service for one residence the District has accepted responsibility for the 330 feet, but have postponed payment by allowing the property owner to install only his equivalent footage amount; i.e. the main on the side street is always 330 feet short. To lessen the

occurrences of this condition District staff will try to install the 330 foot extensions along property sides on all the identifiable streets in future utility local improvement districts, developer extensions and public works projects. However, the problem will always exist.

The combinations and permutations of private owners, developers, large lots, small lots, regular lots, irregular lots, corner lots and varying main spacing makes it very difficult to come up with a simple policy that is fair.

If the lot is rectangular, use front footage.

If the lot is not rectangular, divide the area within 330 feet, or future mains, by the average depth to derive the front footage of an equivalent rectangular lot.

If the lot is a corner lot, charge for the longer side.

For water service, if the lot is greater than 5 acres and more than 330 feet from an existing watermain, charge front footage for a square 209 foot lot (a square one acre), and file a "Notice and Agreement of Future Charges", (a copy is attached).

For sewer service require that all lots have access to permanent sewer service or pay the local facility connection charge(s) for all parts of the permanent system required for permanent service.

When none of the above seem to work, be fair and reasonable.

This page intentionally left blank.

SAMMAMISH PLATEAU WATER & SEWER DISTRICT
KING COUNTY, WASHINGTON

RESOLUTION NO. 4101

RESOLUTION OF THE BOARD OF COMMISSIONERS OF SAMMAMISH PLATEAU WATER AND SEWER DISTRICT, KING COUNTY, WASHINGTON, RESTATING AND ADOPTING REVISED REGIONAL CAPITAL FACILITY CHARGES AND RESCINDING RESOLUTION NO. 3761.

WHEREAS, RCW 57.08.005(11) authorizes the Sammamish Plateau Water and Sewer District ("District") to charge property owners seeking connection to the District's water and sewer systems, as a condition to granting the right to so connect, in addition to the cost of the connection, such reasonable connection charges as the District Board of Commissioners shall determine to be proper in order that those property owners shall bear their equitable share of the cost of the systems; and

WHEREAS, on September 6, 2011 the District Board of Commissioners adopted the District's 2010 Water Comprehensive Plan (the "Plan") by Resolution No. 4089; and

WHEREAS, on February 7, 2005 the District Board adopted Resolution No. 3282 approving the Amended and Restated Cascade Water Alliance Interlocal Contract ("Interlocal Contract") which included the requirement that the District pay Regional Capital Facility Charges ("RCFC") to Cascade Water Alliance ("Cascade") under certain circumstances; and

WHEREAS, on August 27, 2008 the Cascade adopted Cascade Resolution 2008-13 revising the RCFC that the District is required to pay to Cascade under certain circumstances effective January 1, 2009; and

WHEREAS, on November 3, 2008 the District Board adopted Resolution No. 3761 updating and amending such uniform RCFC connection charge previously adopted by Resolution No. 3641, for RCFCs which were collected from owners of certain real property located in the District's Plateau Zone applying to the District for a water meter(s) for domestic or irrigation water consumption to serve their real property, consistent with the RCFC rate that must be paid to Cascade, effective January 1, 2009; and establishing RCFCs which were collected from owners of certain real property located in the District's Cascade View Zone applying to the District for a water meter(s) in excess of 3/4" for domestic or irrigation water consumption to serve their real property, consistent with the uniform RCFC for the increase in meter size above a 3/4", effective January 1, 2009; and

WHEREAS, the RCFC connection charges adopted by Resolution No. 3761 were different for the Plateau Zone and Cascade View Zone in conjunction with segregated District Water General Facility Charges for the Plateau Zone and Cascade View Zone; and

WHEREAS, on October 10, 2011, the District Board adopted Resolution No. _____ approving updated Water General Facility Charges that are consistent for both the Plateau Zone and Cascade View Zone, effective October 4, 2011; and

WHEREAS, the Board desires to now establish RCFCs that are consistent for both the Plateau Zone and Cascade View Zone; and

WHEREAS, the District Board of Commissioners, pursuant to a public notice published in the *Seattle Times* on Monday September 26, 2011, held a Public Hearing on October 3, 2011 on the proposed revision and/or adoption of Water and Sewer General Facility Charge and Water and Sewer Local Facility connection charges; and having received and considered at the hearing staff reports and recommendations regarding the adoption of such General Facility and Local Facility charges, and in addition having received staff reports and recommendations regarding the adoption of RCFC to consider the unified Water General Facility Charge for both the Plateau Zone and Cascade View Zone; and also having received and considered any public comments thereon; and

WHEREAS, pursuant to Chapter 82.16 RCW, the District is required to pay a public utility excise tax ("Excise Tax") to the State of Washington on gross water and sewer revenues, including the collection and receipt of the RCFC by the District, and the District desires to include collection of the Excise Tax with payment of the RCFC which shall be in addition to the RCFC adopted by this resolution to fully recover and remit payment of RCFCs received to the Cascade; and

WHEREAS, the District Board of Commissioners now desires to restate, update and amend such uniform RCFC connection charges previously adopted by Resolution No. 3761; now, therefore,

BE IT RESOLVED, by the Board of Commissioners of Sammamish Plateau Water and Sewer District, King County, Washington as follows:

1. **Regional Capital Facility Charges:** The following uniform RCFCs together with applicable Excise Tax thereon are hereby adopted and shall be assessed against owners of real property applying to the District for a water meter(s) for domestic or irrigation water consumption for a new service or change in service to serve real property:

A. **All Development Except Single Family Residential with Fire Sprinklers:**

Meter Size	Cascade Regional Capital Facility Charge
3/4"	$6,005.00
1"	$15,012.50
1-1/2"	$30,025.00
2"	$48,040.00
3"	$96,080.00
4"	$150,125.00
6"	$300,250.00
8"	$480,400.00
10"	$690,575.00

B. **Single Family Residential with Fire Sprinklers**: In determining the RCFC for a single family residential connection with fire sprinklers, the RCFC owing shall be determined by the District based on the meter size which would be required by the District for a single family residence without fire sprinklers. The District shall consider several factors, including but not limited to the following, to determine the meter size(s) required without fire sprinklers.

(i) The UPC meter size requirements based on fixture count relating to the size of the structure being service;

(ii) District standards in effect at the time of the application for water meter;

(iii) Use of in-ground irrigation; and

(iv) Private service lines in excess of 200 feet in length where the pressure is less than 55 PSI.

The District shall assess the RCFC for the meter size(s) required without fire sprinklers although the owner of the real property to receive water service may be required to have a larger water meter due to the presence of fire sprinklers in the residential unit.

2. District staff are hereby authorized and directed to remit payment of the RCFCs collected by the District to Cascade pursuant to and as required by the Interlocal Contract and resolution(s) adopted by Cascade implementing the Interlocal Agreement.

3. The provisions of this resolution shall be effective on October 11, 2011.

4. All prior and existing District resolutions and policies including Resolution No. 3761 relating to the District RCFCs are hereby revised, modified, and superseded to be in accordance with the charges set forth herein.

5. Notice of the foregoing adoption of uniform RCFCs shall be recorded with the King County Recorder pursuant to the provisions of the RCW 65.08 et seq., together with exhibits describing the real property affected by such Regional Capital Facility Charges.

ADOPTED by the Board of Commissioners of Sammamish Plateau Water and Sewer District, King County, Washington, at a special open public meeting held on the 10th day of October 2011.

Individual Commissioner's Vote on this Resolution:

Approved: ✓		Mary Shustov President and Commissioner
Opposed:		
Abstained:		
Absent:		
Approved:		Tom Harman Vice President and Commissioner
Opposed:		
Abstained:		
Absent:	✓	
Approved:	—	Robert Brady Secretary and Commissioner
Opposed		
Abstained:		
Absent		
Approved:	✓	Lloyd Warren Commissioner
Opposed:		
Abstained:		
Absent:		
Approved:	✓	Robert Abbott Commissioner
Opposed:		
Abstained:		
Absent:		

SAMMAMISH PLATEAU WATER & SEWER DISTRICT
KING COUNTY, WASHINGTON

RESOLUTION NO. 1971

RESOLUTION OF THE BOARD OF COMMISSIONERS OF SAMMAMISH PLATEAU WATER AND SEWER DISTRICT, KING COUNTY, WASHINGTON, ESTABLISHING GUIDELINES FOR DISTRICT PERSONNEL IN THE CONSIDERATION OF UTILITY LOCAL IMPROVEMENT DISTRICT BOUNDARIES AND PETITIONS FOR THE FORMATION THEREOF.

WHEREAS, the Sammamish Plateau Water and Sewer District ("District') has the authority to form Utility Local Improvement Districts ("ULID's") under RCW Chapters 56 and 57 for the installation of sewer and/or water improvements; and

WHEREAS, in previous ULID projects the District has provided limited assistance to property owners requesting the formation of a ULID in determining the ULID boundary; and

WHEREAS, the District has received comments from property owners whose property has been close to but not included within a ULID boundary and such property owners would have supported the inclusion of their property in the ULID if they had been given the opportunity to do so; and

WHEREAS, the District desires to establish guidelines to assist District personnel to identity the maximum logical service boundaries of proposed ULIDs and property owners within such boundaries who may desire to participate in such proposed ULID; and

WHEREAS, the District also desires that the owners of more than a simple majority of the area within a proposed ULID sign petitions requesting the formation of the proposed ULID as an indication of substantial support for it's formation; now therefore,

BE IT RESOLVED, by the Board of Commissioners of Sammamish Plateau Water & Sewer District, King County, Washington, as follows:

When property owners from an area within the District contact the District about the possibility of obtaining utility service for their area through a Utility Local Improvement District, the following guidelines are hereby established to assist the District in determining the proposed ULID boundary.

1. Meet with the ULID proponent (s) concerning their request for utility service to their area to determine the level of interest for and the potential extent of the ULID.

2. Visit the area to identify engineering criteria that could influence the proposed ULID boundaries.

3. With the information gathered propose a potential maximum logical service boundary to the ULID.

    a. Obtain Real Property listings and mailing labels from King County for properties within the possible service area.

    b. Provide questionnaires and mailing labels to the proponents for circulation by mail or hand delivery. A date for returning the questionnaires should be included.

c. Hold an informational meeting for the area as advertised in the distributed questionnaire or by other means.

d. When the questionnaire return date has passed meet with the ULID proponents to determine a logical service boundary, taking interest level and engineering criteria into account.

e. Notify by letter all parties sent a questionnaire of the proposed ULID boundary and provide a deadline not exceeding two weeks to respond with any comments, at which time the boundary will be finalized.

4. The District prepares a legal description for the proposed ULID boundary and a petition form.

5. Circulate the petition. This can be done by either the proponent mailing or hand carrying the petitions, or by a District mailing.

6. If the owners of 60% or more of the area within the proposed ULID boundary responds favorably to the petition, proceed with normal ULID formation. The 60% or more requirement shall include properties which are subject to agreements indicating that upon request property owners sign a petition for a ULID and/or not protest the formation of a ULID, or a signed agreement allowing the President of the Board of Commissioners to sign such a petition on the property owners behalf. If at least 60% of the area within the proposed ULID boundary does not respond favorably to the petition, meet with the proponent (s) to determine if a different boundary should be made, or if no further action on the project should be taken.

7. The foregoing are District guidelines only for consideration in the establishment of proposed ULID boundaries. The establishment of such guidelines shall not modify or amend the District's authority to form ULIDs as set forth in RCW Chapters 35, 56 and 57; further such guidelines are advisory only and the District's failure to follow such guidelines shall not constitute any basis in law or equity to challenge the jurisdiction or authority of the District to proceed with any ULID formed by the District.

8. The above referenced policies and guidelines shall supersede and modify all prior District policies and guidelines and specially Resolution No. 1428 regarding the formation procedures for District ULID's initiated by petition.

ADOPTED at a regular open public meeting of the Board of Commissioners, Sammamish Plateau Water & Sewer District, King County, Washington, held on the 17th day of June 1996.

Gifford W. Miller, President

Robert E. George, Secretary

Jack H. Merritt, Commissioner

SAMMAMISH PLATEAU WATER & SEWER DISTRICT
KING COUNTY, WASHINGTON

RESOLUTION NO. 3721

RESOLUTION OF THE BOARD OF COMMISSIONERS OF SAMMAMISH PLATEAU WATER AND SEWER DISTRICT, KING COUNTY, WASHINGTON, ESTABLISHING POLICIES FOR THE FUNDING OF LONG TERM REPLACEMENT OF CAPITAL FACILITIES.

WHEREAS, maintaining, repairing and replacing the District's water and sewer utilities require substantial capital investments; and

WHEREAS, it is the District's policy to ensure that those capital assets are maintained and replaced in order to provide continuity and sustainability of utility service; and

WHEREAS, the District believes that planning for the funding of long-term replacement of facilities promotes intergenerational rate equity and provides stable rates to customers over the long term; and

WHEREAS, the District previously contracted with Financial Consulting Solutions Group, Inc. ("Consultant") to prepare a long term capital reinvestment study ("Study"), and the consultant prepared and presented the Study to the District; and

WHEREAS, the District Board of Commissioners having considered staff and consultant oral and written reports and recommendations related to planning for long term maintenance and replacement of facilities; now, therefore,

BE IT RESOLVED by the Board of Commissioners of Sammamish Plateau Water and Sewer District as follows:

The District adopts the following policies establishing the Capital Reinvestment Program:

1. The Capital Reinvestment Program as set forth in the study is hereby established consistent with the following policies and procedures:
    a. The District's capital reinvestment strategy shall be based on assessments and forecasts of long-term capital reinvestment needs.
    b. The funding of capital reinvestment needs shall be consistent with District objectives for financial viability and strength
    c. Consistent with the ongoing service commitment to existing customers, utility rates shall be the primary source of funding for capital reinvestment. Levels of rate funding, and increases in those levels, will balance financial needs with equity concerns related to generational transfers. Cost of service rate structures will be used.
    d. The capital reinvestment funding strategy shall be to limit the use of debt for this purpose and emphasize cash (equity) funding of replacement needs. Debt financing shall remain a viable element of the funding

strategy to address peak reinvestment periods or unanticipated capital investment needs.

e. Capital reinvestment funding resources shall be restricted for capital purposes to ensure that funding leads to investment on long term capital assets serving the District's customers.

f. The District shall maintain appropriate procedures for the prioritization and approval of capital projects through budgeting and system planning.

g. The District shall undertake periodic studies to update the forecast of capital reinvestment needs and resources, not less frequently than every 6-year system planning cycle. The Board shall adopt updated findings, policies and procedures relating to capital reinvestment needs based on its review and evaluation of the findings and recommendations of such studies.

2 This resolution and the policies and procedures set forth herein shall be effective the date set forth below.

ADOPTED by the Board of Commissioners of Sammamish Plateau Water and Sewer District, King County, Washington, at a regular open public meeting held on the 21st day of July, 2008.

Individual Commissioner's Vote on this Resolution:

Approved:	✓	Steve Stevlingson President and Commissioner
Opposed:		
Abstained:		
Absent:		
Approved:	✓	Mary Shustov Vice President and Commissioner
Opposed:		
Abstained:		
Absent:		
Approved:	✓	Tom Harman Secretary and Commissioner
Opposed		
Abstained:		
Absent		
Approved:	✓	Lloyd Warren Commissioner
Opposed:		
Abstained:		
Absent:		
Approved:	✓	Robert Brady Commissioner
Opposed:		
Abstained:		
Absent:		

SAMMAMISH PLATEAU WATER & SEWER DISTRICT
KING COUNTY, WASHINGTON

RESOLUTION NO. 3722

RESOLUTION OF THE BOARD OF COMMISSIONERS OF SAMMAMISH PLATEAU WATER AND SEWER DISTRICT, KING COUNTY, WASHINGTON, ESTABLISHING UTILITY CAPITAL FACILITIES REPLACEMENT ACCOUNTS FOR THE WATER AND SEWER UTILITIES WITHIN THE SYSTEM REPLACEMENT FUND FOR THE PURPOSE OF ACCUMULATING FUNDING FOR LONG TERM REPLACEMENT OF FACILITIES.

WHEREAS, District Resolution #3721 establishes policies for the funding of long term replacement of facilities which includes restricting capital reinvestment funding resources for capital purposes; and

WHEREAS, the 2006 Long Term Capital Reinvestment Study ("Study") prepared by Financial Consulting Solutions Group, Inc. ("Consultant") recommended that utility funds not needed for current expenditure be placed in replacement accounts to be used in the future in combination with current revenues and/or debt financing to fund the replacement of capital facilities nearing the end of their useful life; and

WHEREAS, the District Board of Commissioners desires to make an initial deposit of $1,800,000.00 into the Water Capital Facilities Replacement Account from the Maintenance Fund to provide for such long-term water capital facility replacement; and

WHEREAS, the District Board of Commissioners desires to make an initial deposit of $700,000.00 into the Sewer Capital Facilities Replacement Account from the Maintenance Fund to provide for such long-term sewer capital facility replacement; now, therefore,

BE IT RESOLVED by the Board of Commissioners of Sammamish Plateau Water and Sewer District as follows:

1. The following new accounts are established in the System Replacement Fund:
   Capital Facilities Replacement Account – Water
   Capital Facilities Replacement Account - Sewer
2. The District Board of Commissioners shall determine as part of the District's annual operating budget, how much, if any, utility revenue during the budget year shall be designated for transfer to the replacement fund for each capital replacement account.
3. The District Board of Commissioners may also authorize the receipt of other funds directly into the replacement fund for the capital replacement accounts.
4. The decision regarding when and how to utilize such accumulated funds in each capital replacement account shall be made as part of the Capital Program approval process which shall be approved by the District Board of Commissioners.

5. Initial balances in the capital facilities replacement accounts will be established as follows:

Capital Facilities Replacement Account – Water	$ 1,800,000.00
Capital Facilities Replacement Account – Sewer	$ 700,000.00

6. This resolution and the policies and procedures set forth herein shall be effective the date set below.

ADOPTED by the Board of Commissioners of Sammamish Plateau Water and Sewer District, King County, Washington, at a regular open public meeting held on the 21st day of July, 2008.

Individual Commissioner's Vote on this Resolution:

Approved: ✓
Opposed: _____
Abstained: _____
Absent: _____

Steve Stevlingson
President and Commissioner

Approved: ✓
Opposed: _____
Abstained: _____
Absent: _____

Mary Shustov
Vice President and Commissioner

Approved: ✓
Opposed _____
Abstained: _____
Absent _____

Tom Harman
Secretary and Commissioner

Approved: ✓
Opposed: _____
Abstained: _____
Absent: _____

Lloyd Warren
Commissioner

Approved: ✓
Opposed: _____
Abstained: _____
Absent: _____

Robert Brady
Commissioner

SAMMAMISH PLATEAU WATER & SEWER DISTRICT
KING COUNTY, WASHINGTON

RESOLUTION NO. 4794

RESOLUTION OF THE BOARD OF COMMISSIONERS OF SAMMAMISH PLATEAU WATER AND SEWER DISTRICT, KING COUNTY, WASHINGTON, REVISING AND APPROVING FEES AND CHARGES FOR BILLING AND ADMINSTRATION, NEW APPLICATIONS FOR WATER AND SEWER SERVICE CONNECTION, USAGE OF WATER FROM HYDRANTS AND OTHER MISCELLANEOUS FEES AND CHARGES.

WHEREAS, the Sammamish Plateau Water and Sewer District ("District") is a special purpose district providing water and sewer utility services pursuant to Title 57 RCW; and

WHEREAS, RCW 57.08.005 (3) and (5) authorize the District Board of Commissioners to charge for fees associated with the provision of new applications for water and sewer service and for other services, such reasonable charges as the District Board of Commissioner shall deem to be proper; and

WHEREAS, the District Board of Commissioner previously revised and readopted billing and administrative fees and charges by the adoption of Resolution No. 3725 on July 20, 2008; and

WHEREAS, the District Board of Commissioner previously revised and readopted charges for water meter installation, meter drops, side sewer permits, certifications of water and sewer availability, and water and sewer right-of-way permit fees by the adoption of Resolution No. 4720 on August 12, 2013; and

WHEREAS, the District Board of Commissioner previously revised and readopted water hydrant use fees and charges by the adoption of Resolution No. 2690 on December 4, 2000; and

WHEREAS, the District Board of Commissioner previously established a fee for completing segregation certificates by the adoption of Resolution No. A-764 on May 18, 1987; and

WHEREAS, all of the District's fees and charges referenced in this Resolution are collectively referred to herein as "Fees and Charges"; and

WHERERAS, District staff have recommended to the Board of Commissioners that the Fees and Charges be revised to fully recover the costs of providing such services; now, therefore,

BE IT RESOLVED, by the Board of Commissioners of Sammamish Plateau Water & Sewer District, King County, Washington, as follows:

1. The recitals set forth above are incorporated herein by this reference.

2. The Fees and Charges are hereby revised and approved as set forth on **Exhibit A** attached, and shall be effective as of June 12, 2018.

3. All District resolutions, policies and procedures, including Resolution Nos. 3725, 4720, 2690 and A-764 are hereby amended, superseded and/or rescinded to be in accordance with the foregoing effective date set forth herein.

ADOPTED by the Board of Commissioners of Sammamish Plateau Water and Sewer District, King County, Washington, at a regular open public meeting held on the 11th day of June, 2018.

Individual Commissioner's Vote on this Resolution:

Approved: ✓
Opposed:
Abstained:
Absent:

Lloyd Warren, President and Commissioner

Approved: ✓
Opposed:
Abstained:
Absent:

Mahbubul Islam, Vice President and Commissioner

Approved: ✓
Opposed:
Abstained:
Absent:

Mary Shustov, Secretary and Commissioner

Approved: ✓
Opposed:
Abstained:
Absent:

Tom Harman, Commissioner

Exhibit A
Fees and Charges

Section 1 – Customer Account Charges

	Fee	Fee Amount
1	**NSF** - Fee charged to recover bank charges and District staff time to process and collect cost for returned checks.	$ 30.00
2	**New Account** - Costs associated with establishing a new customer account.	$ 25.00
3	**Meter Padlocking** - Fee charged for the costs associated with padlocking meter for delinquent accounts.	$ 45.00
4	**Meter Unpadlocking** - Fee charged costs associated with unpadlocking meter after payment is made.	$ 45.00
5	**Afterhours Unpadlocking** - Fee charged for costs associated with unpadlocking a meter after business hours.	$ 150.00
6	**Customer Request Padlocking/Unpadlocking** - Fee charged to padlock/unpadlock a meter per customer request during District business hours.	$ 30.00
7	**24 Hour Shut-Off Notice** – Fee charged to accounts when delinquent and staff delivers a notice at the customer's home, per the District Collection Policy	$ 10.00
8	**Meter Accuracy Testing** - Customer request for testing of meter accuracy. Fee is for pulling, testing and reinstalling the meter if the testing confirms meters accuracy within _____ (_____) percent.	$ 160.00

Section 2 - Hydrant Use Charges

	Fee	Fee Amount
1	**Hydrant Meter Deposit 3/4" -** Reimbursable deposit to covers cost to replace meter if District meter not returned or is damaged.	$ 200.00
2	**Hydrant Meter Deposit 3" -** Reimbursable deposit to covers cost to replace meter if District meter not returned or is damaged.	$ 1,200.00
3	**Hydrant Meter Wrench Deposit** - Reimbursable deposit to cover cost to replace wrench if wrench not returned or is damaged.	$ 50.00
4	**Hydrant Use Setup Fee** - to cover costs associated with setting up a customer to use water from a hydrant, including truck inspection for backflow	$ 150.00
5	**Hydrant Use Permit Daily -** Daily base charge for using water from a District hydrant - if more than 4 days usage, reverts to monthly charge	$ 25.00
6	**Hydrant Use Permit Monthly -** Monthly base charge for using water from a District hydrant	$ 100.00
7	**Hydrant Use without Authorization** – In addition to all other applicable District fees and charges, fine for unauthorized use of a District hydrant	$ 500.00
8	**Hydrant Meter Read Trip Fee -** Fee if District staff has to make more than one trip to obtain hydrant meter reading	$ 75.00

Section 3 - New Customer Charges and Permit Fees

	Fee	Fee Amount
1	**3/4" Meter Drop** - Fee for development projects for dropping meter in box installed by the developer's contractor.	$ 550.00
2	**1" Meter Drop** - Fee for development projects for dropping meter in box installed by the developer's contractor.	$ 600.00
3	**1 1/2" Meter Drop** - Fee for development projects for dropping meter in box installed by the developer's contractor.	$ 825.00
4	**Meter Drop Revisit -** Fee for returning a second time to a service location to drop a meter due to meter box being obstructed.	$ 65.00
5	**2" Meter Drop** - Fee for development projects for dropping meter in box installed by the developer's contractor.	$ 1,050.00
6	**3" Water Meter Drop** - Time and materials only, contractor to install with observation of District Inspector.	T & M
7	**4" Water Meter Drop** - Time and materials only, contractor to install with observation of District Inspector.	T & M
8	**3/4" Meter Install** - Fee for purchase of meter, and operations staff time to tap the main and install setter and meter.	$ 5,250.00
9	**1" Meter Install -** Fee for purchase of meter, and operations staff time to tap the main and install setter and meter.	$ 5,410.00
10	**1 1/2" Meter Install -** Fee for purchase of meter, and operations staff time to tap the main and install setter and meter.	$ 6,810.00
11	**2" Meter Install -** Fee for purchase of meter, and operations staff time to tap the main and install setter and meter.	$ 7,000.00
12	**Fire Sprinkler Review Fee -** Adding additional Engineering staff time for review of a Fire Sprinkler Permit with water meter drop or install.	$ 270.00
13	**Single Family Side Sewer Permit -** Permit fee to cover cost of staff time for account set-up, pre-construction meeting and inspection.	$ 300.00
14	**Non Single Family Side Sewer Permit -** Permit fee to cover cost of staff time for account set-up, pre-construction meeting and inspection.	$ 450.00
15	**Single Family Side Sewer Permit Grinder -** Fee for Sewer Operations staff for multiple site visits for pre-construction meetings and inspections.	$ 1,650.00
16	**Grease Interceptor -** additional side sewer costs when a grease interceptor is required	$ 1,150.00
17	**Oil Water Separator -** additional side sewer costs when an oil water separator is required	$ 1,150.00

Section 4 - Miscellaneous Fees and Charges

	Fee	Fee Amount
1	**Certificate of Availability - Single Family**	$ 60.00
2	**Certificate of Availability - Non-Single Family**	$ 420.00
3	**Segregation Certificate** *	$ 450.00
4	**Segregation Certificate Each Additional Lot**	$ 35.00
5	**Developer Extension Agreement Application Fee**	$ 1,500.00
6	**GIS Information (per hour)**	$ 130.00

*Includes one lot

This page intentionally left blank.

SAMMAMISH PLATEAU WATE & SEWER DISTRICT
KING COUNTY, WASHINGTON

RESOLUTION NO. 4834

A RESOLUTION OF THE BOARD OF COMMISSIONERS OF SAMMAMISH PLATEAU WATER AND SEWER DISTRICT, KING COUNTY, WASHINGTON, REVISING AND ESTABLISHING WATER AND SEWER SERVICE RATES AND CHARGES AND REPEALING RESOLUTION NO.4753.

WHEREAS, RCW 57.08.081 authorizes the Sammamish Plateau Water and Sewer District Board of Commissioners ("District") to fix rates and charges for furnishing sewer service and facilities to those to whom sewer service is available and for providing such service, and to fix rates and charges for providing water service, such rates and charges to be fixed as deemed necessary by the District Board of Commissioners so that uniform charges will be made for the same class of customer or service and facility; and

WHEREAS, RCW 57.08.081 authorizes the District Board of Commissioners in classifying customers to consider in its discretion several factors including the difference in cost to various customers, the location of the various customers within and without the District, the difference in cost of maintenance, operation, repair and replacement of the various parts of the system, the different character of the service furnished to various customers, the quantity and quality of the service and facility furnished, the time of its use, the achievement of water conservation goals and the discouragement of wasteful practices and any other matters which present a reasonable difference as a ground for a distinction in the establishment of water and sewer service rates and charges; and

WHEREAS, the District Board of Commissioners previously established water and sewer service rates for all customer classifications by the adoption of Resolution No. 4753 on December 11, 2017; and

WHEREAS, District staff have advised that King County, as the successor to Metro, pursuant to the Agreement for Sewage Disposal between the District and King County, has increased its monthly sewer wholesale rate per equivalent residential unit to the District from $44.22 to $45.33 effective January 1, 2019, and District staff have recommended that the District increase its monthly sewer service rate to all customer classifications to pass through that wholesale rate increase from King County to such customers; and District staff have advised that King County may further increase such monthly sewer wholesale rate per equivalent residential unit to the District in the future and District staff have recommended that the District increase its monthly sewer service to all customer classifications to pass through any wholesale sewer rate increase from King County to such customers at such time as the increase in King County's sewer wholesale rate to the District may be effective; and

WHEREAS, RCW 57.08.005 (3) authorizes the District, where a customer's property is connected to the District's water system and uses water service on an intermittent or transient basis, to charge for providing water service to such customer, regardless of the amount of water, if any, used by the customer; and

WHEREAS, RCW 57.08.005 (3) provides the District full authority to regulate and control the use, content, distribution and price of water furnished to its customers; and RCW 57.08.005 (5) provides the District full authority to regulate the use and operation of the District's sewer system and the service charges to be charged District customers; and

WHEREAS, the owners of property which have been connected to the District's water and sewer systems benefit from connection to and the availability of utility service from such systems even though owners choose not to use water or sewer service on a continuous basis or their utility service is inactive because such service is shut-off due to nonpayment of District utility billings; and such benefits include the continued availability of such utility services, continued access to fire protection service, and reduced insurance cost; and

WHEREAS, the District retained Financial Consulting Solutions Group, ("Consultant") to study and to prepare an analysis on the District's water and sewer revenue requirements and service rate structures, and the Consultant has recommended the revision of the District's water and sewer rates and charges,

WHEREAS, the District Board of Commissioners having considered staff recommendations related to the proposed revision of the District's water and sewer service rates and charges, and having held a public hearing on December 3, 2018, for public comment on such proposed revisions pursuant to the media notification through a press release on November 16, 2018 and pursuant to the public notice regarding such hearing published in the Seattle Times on Sunday, November 18, 2018, Sunday, November 25, 2018 and in the Seattle Times NW Classifieds from Sunday, November 18, 2018 through Friday November30, 2018; and the District Board of Commissioners having considered such staff and Consultant recommendations and oral and written public comments; now, therefore,

BE IT RESOLVED, by the Board of Commissioners of Sammamish Plateau Water & Sewer District, King County, Washington, as follows:

1. The District water service charges set forth on Exhibit "A" attached hereto and by this reference incorporated herein are hereby approved and adopted and shall be effective for all water utility service provided after January 1, 2019, on a prorated basis.
   4
2. The District sewer service charges set forth on Exhibit "A" attached hereto and by this reference incorporated herein are hereby approved and adopted and shall be effective for all sewer utility service provided after January 1, 2019, on a prorated basis.

3. The owners of property connected to the District's water and sewer systems shall be charged a monthly fixed charge for water and sewer service even though such owners may choose not to use water or sewer service on a continuous basis or their utility service is inactive because such service is shut-off due to nonpayment of District utility billings.

4. Subsequent to the effective dates set forth in this resolution, in the event King County increases its monthly wholesale sewer rates to the District pursuant to Agreement for Sewage Disposal referenced herein, the District's sewer service rates shall automatically be incre45.33ased in equal proportion for all District customer classifications effective the date that any such King County wholesale sewer rate increase(s) are effective as to the District.

5. All District resolutions, policies and procedures, including Resolution No. 4753, are hereby amended, superseded and/or rescinded to be in accordance with the foregoing effective dates set forth herein.

ADOPTED by the Board of Commissioners of Sammamish Plateau Water and Sewer District, King County, Washington, at a regular open public meeting held on the 3rd day of December, 2018.

Individual Commissioner's Vote on this Resolution:

Approved: ✓
Opposed:
Abstained:
Absent:

Lloyd Warren, President and Commissioner

Approved: ✓
Opposed:
Abstained:
Absent:

Mahbubul Islam, Vice President and Commissioner

Approved:
Opposed:
Abstained:
Absent:

Mary Shustov, Secretary and Commissioner

Approved:
Opposed:
Abstained:
Absent:

Tom Harman, Commissioner

Approved:
Opposed:
Abstained:
Absent:

Ryika Hooshangi, Commissioner

2019 Water and Wastewater Rates
Effective 1-1-2019

SINGLE FAMILY RESIDENTIAL WATER AND SEWER RATES

The District sets rates and bills customers on bi-monthly basis. Bills consist of a fixed water charge based on meter size as follows:

METER SIZE	MONTHLY FIXED CHARGE	BI-MONTHLY FIXED CHARGE
¾" METER	$30.87	$61.74
1" METER	$66.28	$132.56
1-1/2" METER	$125.29	$250.58
2" METER	$196.11	$392.22
3" METER	$384.93	$769.86
4" METER	$597.39	$1,194.78

In an effort to promote conservation and to protect our precious resource, water is charged in an increasing rate block structure on a bi-monthly basis. This is in addition to the fixed base charge. The rates are as follows:

RATE BLOCK 1:

	CUBIC FEET	GALLONS	COST PER 100 CF
MONTHLY	0-600	0-4488	$ 2.02
BI-MONTHLY	0-1200	0-8976	$ 2.02

RATE BLOCK 2:

	CUBIC FEET	GALLONS	COST PER 100 CF
MONTHLY	601-1200	4489-8976	$ 2.46
BI-MONTHLY	1201-2400	8977-17952	$ 2.46

RATE BLOCK 3:

	CUBIC FEET	GALLONS	COST PER 100 CF
MONTHLY	1201-2500	8977-18700	$ 3.98
BI-MONTHLY	2401-5000	17953-37400	$ 3.98

RATE BLOCK 4:

	CUBIC FEET	GALLONS	COST PER 100 CF
MONTHLY	>2500	>18701	$6.63
BI-MONTHLY	>5000	>37401	$6.63

DISTRICT SEWER CHARGE for transporting the sewage away from your home and maintaining our sewer mains and lift stations is:

Monthly $36.05 Bi-monthly $72.10 This is a fixed charge.

KING COUNTY WASTEWATER TREATMENT CHARGE for treatment and disposal of the sewage is:

Monthly $45.33 Bi-monthly $90.66 This is a fixed charge.

GRINDER PUMP FEES may apply if your home is lower than the sewer main in the street.

Monthly $ 35.04 Bi-monthly $70.08 This is a fixed charge.

2019 Water and Wastewater Rates
Effective 1-1-2019

MULTI-FAMILY WATER AND SEWER RATES

The District sets rates on and bills customer on a bi-monthly basis. Bills consist of a fixed water charge based on the number of units served. The charged per unit is approximately 58% of the base charge of the single-family base charge for a ¾" meter.

MONTHLY FIXED CHARGE PER UNIT	BI-MONTHLY FIXED CHARGE PER UNIT
$17.92	**$35.84**

In addition to the base fees there will be a water consumption charge. The water is billed at a seasonal rate for bills issued as follows:

Between November and June:
Water is charged at $1.63 per 100 cubic feet of water used or every 748 gallons of water.

Between July and October:
Water is charged at $2.40 per 100 cubic feet of water used or every 748 gallons of water.

DISTRICT SEWER CHARGE for transporting the sewage away from your residence and maintaining our sewer mains and lift stations is:

Monthly $23.38 Bi-monthly $46.76 This is a fixed charge per unit.

KING COUNTY WASTEWATER TREATMENT CHARGE for treatment and disposal of the sewage is

Monthly $45.33 Bi-monthly $90.66

This includes the first 1500 cubic feet or 11,220 gallons of water used. In addition there would be a consumption charge of $6.044 for each additional 100 cubic feet of water used or 748 gallons of water used.

2019 Water and Wastewater Rates
Effective 1-1-2019

PUBLIC INSTITUTION, COMMERCIAL, AND INDUSTRIAL CUSTOMER WATER AND SEWER RATES

The District sets rates and bills customers on bi-monthly basis. Bills consist of a fixed water charge based on meter size as follows:

METER SIZE	MONTHLY FIXED CHARGE	BI-MONTHLY FIXED CHARGE
¾" METER	$30.87	$61.74
1" METER	$66.28	$132.56
1-1/2" METER	$125.29	$250.58
2" METER	$196.11	$392.22
3" METER	$384.93	$769.86
4" METER	$597.39	$1,194.78

In addition to the base fees there will be a water consumption charge. The water is billed at a seasonal rate as follows:

Between November and June:
Water is charged at $1.63 per 100 cubic feet of water used or every 748 gallons of water.

Between July and October:
Water is charged at $2.40 per 100 cubic feet of water used or every 748 gallons of water.

DISTRICT SEWER CHARGE for transporting the sewage away from your residence and maintaining our sewer mains and lift stations is:

Monthly $40.96 Bi-monthly $81.92

This includes the first 1500 cubic feet or 11,220 gallons of water used. In addition there would be a consumption charge of $4.515 for each additional 100 cubic feet of water used or 748 gallons of water used.

KING COUNTY WASTEWATER TREATMENT CHARGE for treatment and disposal of the sewage is:

Monthly $45.33 Bi-monthly $90.66

This includes the first 1500 cubic feet or 11,220 gallons of water used. In addition there would be a consumption charge of $6.044 for each additional 100 cub feet of water used or 748 gallons of water used.

2019 Water and Wastewater Rates
Effective 1-1-2019

IRRIGATION WATER RATES

The District sets rates and bills customers on bi-monthly basis. Bills consist of a fixed water charge based on meter size as follows:

METER SIZE	MONTHLY FIXED CHARGE	BI-MONTHLY FIXED CHARGE
¾" METER	$30.87	$61.74
1" METER	$66.28	$132.56
1-1/2" METER	$125.29	$250.58
2" METER	$196.11	$392.22
3" METER	$384.93	$769.86
4" METER	$597.39	$1,194.78

In addition to the base fees there will be a water consumption charge. The water is billed at a seasonal rate as follows:

Between November and June:
Water is charged at $10.87 per 100 cubic feet of water used or every 748 gallons of water.

Between July and October:
Water is charged at $11.28 per 100 cubic feet of water used or every 748 gallons of water.

Customers can participate in the District's Irrigation Audit Program on a voluntary basis. To receive the "Irrigation with Audit" rate, customers must have their irrigation systems inspected and audited by a Certified Irrigation Auditor. Customers must also meet minimum program entry requirements, maintain their systems, fix leaks promptly and remain within an annual water allowance in order to continue receiving the "Irrigation with Audit" rate.

If your irrigation system has been audited by a certified Irrigation Auditor and you qualify for the with audit rate your water rate is as follows:

Between November and June:
Water is charged at $6.44 per 100 cubic feet of water used or every 748 gallons of water.

Between July and October:
Water is charged at $6.63 per 100 cubic feet of water used or every 748 gallons of water.

This page intentionally left blank.

Appendix H

Reimbursement Agreement

This page intentionally left blank.

SAMMAMISH PLATEAU WATER AND SEWER DISTRICT
KING COUNTY, WASHINGTON

RESOLUTION NO. 4334

RESOLUTION OF THE BOARD OF COMMISSIONERS OF SAMMAMISH PLATEAU WATER AND SEWER DISTRICT, KING COUNTY, WASHINGTON, REVISING THE FORM REIMBURSEMENT AGREEMENT AND READOPTING THE PROCEDURE FOR ADOPTING REIMBURSEMENT AGREEMENTS AND FORM RESOLUTION FOR REIMBURSEMENT AGREEMENT ADOPTION

WHEREAS, Chapter 57.22 RCW authorizes Reimbursement Agreements for the cost of the construction of water and/or sewer facilities by property owners; and

WHEREAS, the Board of Commissioners previously adopted forms, policies and procedures for Reimbursement Agreements as defined by Resolution No. 3144 on February 2, 2004, and as included in the form developer extension agreement adopted by Resolution No. 3200 on July 6, 2004; and,

WHEREAS, the Board of Commissioners revised the adopted forms by Resolution No. 3475 on June 19, 2006, and as included in the form developer extension agreement adopted by Resolution No. 4117 on December 5, 2011; and,

WHEREAS, the Board of Commissioners now desires to modify the fees associated administering and adopting Reimbursement Agreements by revising the application and process that are a portion of the form Reimbursement Agreement; now therefore,

BE IT RESOLVED, by the Board of Commissioners of Sammamish Plateau Water and Sewer District, King County, Washington, as follows:

1. The form Reimbursement Agreement presented in Exhibit "A" is hereby approved and adopted.

2. The policies and procedures for the review, consideration, and processing of applications for Reimbursement Agreements pursuant to Chapter 57.22 RCW as described on Exhibit "B" attached hereto are hereby approved and adopted.

3. The form Application for or Waiver of Reimbursement Agreement presented in Exhibit "C" attached hereto is hereby approved and adopted.

4. District staff shall present all Reimbursement Agreements to the Board of Commissioners for approval by Resolution, using the general form of the Resolution presented in Exhibit "D".

5. All District resolutions, including Resolution Nos. 3144, policies, and procedures are hereby modified, superseded, and rescinded to be in accordance with the foregoing.

ADOPTED at a regular open public meeting of the Board of Commissioners, Sammamish Plateau Water and Sewer District, King County, Washington, held on the 7th day of April, 2014.

Individual Commissioner's Vote on this Resolution:

Approved:		Robert Abbott, President and Commissioner
Opposed:		
Abstained:		
Absent:		
Approved:	✓	Lloyd Warren, Vice President and Commissioner
Opposed:		
Abstained:		
Absent:		
Approved:	✓	Mary Shustov, Secretary and Commissioner
Opposed:		
Abstained:		
Absent:		
Approved:	✓	Tom Harman, Commissioner
Opposed:		
Abstained:		
Absent:		
Approved:		Karen Moran, Commissioner
Opposed:		
Abstained:		
Absent:		

SAMMAMISH PLATEAU WATER & SEWER DISTRICT
REIMBURSEMENT AGREEMENT

THIS AGREEMENT ("Agreement") is made and entered into this _____ day of _____, _____, ("Effective Date") between the Sammamish Plateau Water & Sewer District, a municipal corporation ("District") and _____ ("Developer").

R E C I T A L S:

A. District is a duly organized water and sewer district under the laws of the State of Washington, and is empowered to furnish both water and sewer service, to property owners within or without the District in the manner provided by law; and

B. Developer previously entered into a Developer Extension Agreement ("DEA") dated the _____ day of _____, _____, for the construction and installation of water and/or sewer extensions to serve Developer's property which is described on Exhibit "A" attached hereto; Developer completed installation of such extensions in accordance with the terms of the DEA, portions of which make utility service available to real property other than the Developer's property within (and without) the District hereinafter known as the benefited properties ("Benefited Properties"), described on Exhibit "B" attached hereto; the owners of such Benefited Properties have not contributed to the cost of the extensions ("Extension Facilities") installed by Developer; and Developer is entitled to reimbursement from real property owners seeking connection to or use of such Extension Facilities for the cost of such Extension Facilities in excess of Developer's pro rata share therefor which costs have been determined as set forth below; and

C. District will collect charges from the owners of Benefited Properties within (and without) the District connecting to or using the Extension Facilities; and such charges are the sole source of funds for the District from which reimbursement to Developer can and will be made, as and when the same are collected; and

D. District is authorized to enter into a reimbursement agreement with Developer under the provisions of Chapter 57.22 RCW; and the parties desire to enter into a written reimbursement agreement ("Agreement") with reference to the foregoing matter, now, therefore,

IN CONSIDERATION of the following terms and conditions, the District and the Developer agree as follows:

1. Records/Costs. After completion of the construction of the Extension Facilities, Developer will certify to the District the final design, engineering, construction and restoration costs incurred by Developer in constructing the Extension Facilities and submit such supporting vouchers, invoices and other data as the District may require to substantiate the certified costs. The executed, notarized Agreement, all exhibits, and all supporting documentation must be submitted to the District before the Extension Facilities will be accepted by the District. Any changes or additional information requested by the District must be submitted to the District within 21 days of District notification to the Developer. District reserves the right to approve or reject the certified costs as reasonable and subject to reimbursement. The District shall allocate the cost of the Extension Facilities among Developer's property and the Benefited Properties on a pro rata share basis. However, the District reserves the right to allocate such costs in any manner conforming with applicable law and the policies of the District.

2. Charges. District shall require owner(s) of the Benefited Property to pay a reimbursement charge determined in accordance with the terms of this Agreement. The reimbursement charge shall be payable in total at the time of such owner's connection to or use of the Extension Facilities. The amount of such reimbursement charge to be collected prior to such connection is set forth on Exhibit "C" attached hereto; such charges may include, but are not limited to, pro rata share of District legal, engineering, administrative, set-up, handling and actual costs of the Extension Facilities. Such reimbursement charges shall be in addition to all other District charges in effect at the time of seeking connection to such Extension Facilities. Upon application by Benefited Property owners, the District may further segregate reimbursement charges attributed to property connecting to the Extension Facilities. All costs of such segregation shall be borne by the party requesting such segregation.

3. Developer Charge. The District shall deduct the sum of $150.00 ("Developer Charge") for each reimbursement payment received before the Developer shall be entitled to receive the balance of such payment. Such base fee and charges herein described shall be collected by the District for costs and expenses incurred in connection with the administration of this Agreement.

4. Recording, Liens. This Agreement shall be recorded in the office of the King County Auditor, King County, Washington, upon execution by the District and the Developer. Such Agreement shall constitute a lien and record notice upon the property described in Exhibit "B" not contributing to the original cost of the Extension Facilities installed by Developer under the provisions hereof and shall be binding upon the present owner thereof, and all successors and assigns to those respective parties in accordance with Chapter 57.22 RCW. When paid by any party seeking connection to the Extension Facilities, the lien shall be satisfied and discharged of record. Developer hereby appoints the Secretary of the Board of Commissioners, or his/her successor, as its attorney-in-fact, to prepare, execute and file for record with the King County Recorder a document appropriate to cancel and release the lien, charge or obligation of the Benefited Property owner paying the reimbursement amount to District, which will describe with particularity the property so connecting and paying the reimbursement amount, and thereupon this agreement shall no longer apply to such property. This appointment as attorney-in-fact is irrevocable during the existence of this Agreement.

5. Developer Contact Information: The Developer shall provide the District with contact information ("Contact Location"). The initial Contact Location shall be provided as follows:

Contact Information and Address for Receipt of Reimbursement Funds

_____
(Printed Name of Developer's Representative)

_____
(Company Name)

_____
(Mailing Address)

_____
(City, State, Zip code)

_____
(Telephone/FAX)

The Developer shall inform the District, in writing, of their current Contact Location every two years plus sixty (60) days from the Effective Date ("Contact Update Dates"), or sooner of company name, address, or telephone number for the receipt of reimbursement funds.

If the Developer fails to submit their current Contact Location to the District at least every two years plus sixty (60) days from the Contact Update Dates noted above the District may terminate the right of the Developer to receive any reimbursement charges collected by the District after such Contact Update Date as described in Section 7 of this Agreement.

The notification of current Developer Contact Location shall be sent to the District at the following address, unless the District provides written notification to Developer of a change in District address as follows.

District Contact Information

General Manager
Sammamish Plateau Water and Sewer District
1510 – 228th Avenue SE
Sammamish, WA 98075
(425) 392-6256

6. Payment Procedure. The District will pay any reimbursement charges collected to Developer, less the Developer Charge, within sixty (60) days following receipt thereof, District to follow its established procedures of depositing such funds received with the King County Treasurer and drawing upon the same and making payment by King County Treasurer warrant in the manner provided by law. The District shall forward reimbursement funds referenced herein to Developer at the address provided by the Developer as their Contact Location.

As a condition of receiving such reimbursement funds, Developer shall execute a receipt to the District for such reimbursement amounts so paid upon the receipt form provided by District. Such form shall include the name of the Benefiting Property owner making payment of such amount to the District and the legal description of the Benefited Property connecting to the Extension Facilities.

In the event of a dispute as to the rightful party to receive such funds, the District may pay the same to the Developer referenced herein or interplead such funds to the court; in either event, District shall thereupon be relieved of any further obligation or of liability hereunder as to such reimbursement funds so paid.

7. Termination of Developer's Right to Receive Reimbursement. In the event the District collects reimbursement charges from owners of Benefited Property and the Developer has failed to comply with the requirements of Section 5 of this Agreement, the District will attempt to contact the Developer by mail at their most recent Contact Location and request the Developer provide, within 60 days from the date of mailing of the request, written confirmation and update of their current Contact Location. If the Developer fails to submit an Updated Contact Location within the 60-day period, the right of the Developer to receive reimbursement charges collected by the District shall terminate, and any reimbursement charges collected by the District following the Contact Update Date shall be collected and retained by the District and deposited in the District's capital fund for expenditure by the District.

8. Term. This Agreement shall remain effective for a period of fifteen (15) years from the date set forth on page one (1) of this Agreement as to any Benefited Property for which a connection application is submitted to the District during such fifteen (15) year term. Developer shall have no further claim as to monies collected from any Benefited Properties after the expiration of the fifteen (15) year term.

9. Agreement Implementation. The District will use its best efforts to collect and distribute the reimbursement funds pursuant to the process set forth in this Agreement. However, the District, its officials, employees or agents shall not be held liable or responsible for failure to implement any of the provisions of this Agreement unless such failure is willful or intentional.

10. General. All exhibits referred to herein are by this reference made a part hereof as though set forth in full. This Agreement is binding upon the heirs, executors, administrators, successors and assigns, of each of the parties hereto.

11. Assignment. The Developer shall not assign its rights and obligations under this Agreement without the prior written consent of the District. In the event of an assignment, such person or entity shall be referred to as the "Developer" or "Developer's Assigns".

12. Effective Date. This Agreement shall be effective upon the date set forth on page one (1) of this Agreement ("Effective Date").

SAMMAMISH PLATEAU WATER & SEWER DISTRICT ("District")	_____ ("Developer")
By _____	By _____
Its _____	Its _____

STATE OF WASHINGTON)
) ss.
COUNTY OF KING)

I certify that I know or have satisfactory evidence that _____ is the person who appeared before me, and said person acknowledged that they signed this instrument, on oath stated that they were authorized to execute the instrument and acknowledged it as the _____ of _____ _____ to be the free and voluntary act of such corporation for the uses and purposes mentioned in the instrument.

Dated _____

_____
Notary Public in and for the State of Washington,
residing at

_____
My Appointment Expires _____

STATE OF WASHINGTON)
) ss.
COUNTY OF KING)

I certify that I know or have satisfactory evidence that _____ is the person who appeared before me, and said person acknowledged that they signed this instrument, on oath stated that they were authorized to execute the instrument and acknowledged it as the _____ of Sammamish Plateau Water and Sewer District to be the free and voluntary act of such corporation for the uses and purposes mentioned in the instrument.

Dated _____

_____
Notary Public in and for the State of Washington,
residing at

_____
My Appointment Expires _____

EXHIBIT A
LEGAL DESCRIPTION OF DEVELOPER'S PROPERTY

EXHIBIT B
LEGAL DESCRIPTION OF BENEFITED PROPERTY(IES)

EXHIBIT C
DESCRIPTION OF REIMBURSEMENT

DISTRICT REIMBURSEMENT AGREEMENT PROCESS FOR WATER/SEWER FACILITIES

Pursuant to District Resolution No. **4334**, the procedure for processing reimbursement agreements under a Developer Extension Agreement is as follows:

1. Developer enters into Developer Extension Agreement.
2. Developer meets with District staff in predesign meeting to discuss the proposed design, including any offsite water/sewer facilities, facilities within the project that can provide direct service to other properties, or facilities such as lift stations or booster pump stations that serve a larger area than just the Developer's property.
3. Developer submits signed application/waiver form for reimbursement agreement (required for **ALL** Developer Extension Agreements) no later than the time of the predesign meeting.
4. If the Developer is entering into a reimbursement agreement, the Developer will pay all District expenses on a time-and-materials basis, including labor and overhead, for District services associated with the review, dissemination, adoption, and recording of the reimbursement agreement. Payment for District services is due within 30 days of the date of the invoice. Failure to pay invoices by the due date will result in suspension of all District activities on the Reimbursement Agreement until the invoices are paid in full. No reimbursement payments will be made to the Developer until the invoices are paid in full.
5. Developer prepares design and submits to District.
6. If Developer is applying for a reimbursement agreement, the Developer shall submit the following, and District staff will not review plans until the required submittals have been received in a form acceptable to the District.
   - A map of the reimbursement area: a plan (up to 11"x17" size) showing the facilities to be constructed and tax lots affected by reimbursement agreement;
   - Electronic database containing properties within the proposed reimbursement area (tax lot number, property owner name and mailing address, property owner telephone number);
   - Mailing labels for the property owners of record;
   - Estimated total costs of the water and/or sewer improvements, prepared by a qualified licensed professional engineer, including an estimate of all costs proposed to be included (such as engineering, surveying, testing, landscape restoration, paving, reimbursement agreement administration costs, etc.);
   - Proposed methodology for calculating the pro rata reimbursement charges for each property; and the estimated reimbursement charge to be assessed for each of the parcels in the proposed reimbursement area.
7. District mails notification to each of the owners of real property within the reimbursement area (by certified mail, copy received and by regular U.S. Mail) regarding the estimated proposed reimbursement charge for the proposed reimbursement area. The letter contains an explanation of the methodology proposed to be used, a map showing the real property and the water and/or sewer facilities being installed, the conditions under which the property owners would be required to pay the assessed fees, and the time period for reimbursement.

8. Developer completes the design, which is approved by the District, and the Developer constructs the project.
9. Following District acceptance of the project construction and before the District issues Final Acceptance of the DEA, the Developer submits the following:
   - Reimbursement Agreement that has been completed, signed and notarized, including all exhibits. The date on the first page of the Reimbursement Agreement as submitted is the date from which the 15 year term of the Reimbursement Agreement will run.
   - Revisions to property owner information for real property to be subject to reimbursement.
   - Backup invoices of actual costs incurred
10. Developer receives Final Acceptance for project (resolution from Board)
11. District staff reviews Reimbursement Agreement.
    A. If District staff determines the Reimbursement Agreement and its exhibits are in a form acceptable to the District the Reimbursement Agreement Process continues to the next step.
    B. If District staff finds corrections to the reimbursement agreement or exhibits are required
       i. The Reimbursement Agreement will be returned to the Developer for correction.
       ii. The Developer will have 21 calendar days to resubmit a corrected Reimbursement Agreement.
       iii. If the corrections are not resubmitted to the District within the 21 calendar days, the Developer's Application for Reimbursement Agreement becomes null and void.
       iv. District staff reviews revisions and repeats this step.
12. District staff mails notification to each of the owners of real property within the reimbursement area (by certified mail, copy received and by regular U.S. Mail) regarding the final proposed reimbursement charge for the proposed reimbursement area. The letter contains an explanation of the methodology used, the statutes regarding reimbursement agreements, the conditions under which the property owners would be required to pay the assessed fees, the time period for reimbursement, and how and when the property owners can review the cost information and project data at the District. Property owners are informed to submit comments to the District by a certain date (within 3 weeks) and that the Board of Commissioners will consider the reimbursement agreement at the next regularly scheduled Board meeting following the 3 week period.
13. Following the 3 week comment period, District staff schedules the proposed reimbursement agreement for the next regularly-scheduled Board meeting
14. The Board reviews the proposed reimbursement agreement, together with any comments received by the affected property owners.
    A. If the Board approves the reimbursement agreement, by Resolution, the Reimbursement Agreement Process continues to the next step.
    B. If the Board does not approve the reimbursement agreement in the form proposed, District staff will return the reimbursement agreement to the Developer for modification or correction and repeats step 10 above.

C. If the Board determines that a reimbursement agreement is not allowable for this development and the facilities included, the reimbursement agreement application will be denied and District staff will mails notification to each of the owners of real property within the proposed reimbursement area (by certified mail, copy received and by regular U.S. Mail) informing them that the reimbursement agreement will not be recorded. The developer will be notified by District staff of the Board's finding and the reimbursement agreement process ends.

15. District staff mails notification to each of the owners of real property within the reimbursement area (by certified mail, copy received and by regular U.S. Mail) informing them that the reimbursement charge will be imposed and the reimbursement agreement will be recorded against their property.

16. District staff submits reimbursement agreement to King County for recording.

17. District staff receives the recorded reimbursement agreement from King County and puts it in the reimbursement agreement notebook

18. As properties included in the reimbursement area submit requests for water/sewer service, District staff will determine if a reimbursement amount is owed. If a reimbursement amount is owing, the District will collect this reimbursement amount as part of the property service connection charges. The District will then process payment to the developer, pursuant to the terms of the reimbursement agreement, of the reimbursement amount collected less a District administration fee of $150 per reimbursement charge collected.

19. **Developer must submit to the District updated contact information every two years plus sixty (60) days, even if there is no change to the contact information,** with the two year date measured from the date on the first page of the reimbursement agreement.

    A. If the Developer submits the required updated contact information every two years plus sixty (60) days, as required, the District will update the developers contact information and any reimbursement amounts collected by the District pursuant to the approved reimbursement agreement will be paid to the developer in accordance with the reimbursement agreement.

    B. If the Developer has not submitted the required updated contact information every two years plus sixty (60) days, as required, and if the District collects reimbursement charges from owners of Benefited Property, the District will then attempt to contact the developer by mail at the contact location most recently provided by the developer, and request the developer confirm and/or update their contact information within 60 days from the date the inquiry is sent, so the District can continue to process the reimbursement agreement.

        i. If the developer responds to the request for updated contact information within the 60-day period, the District will incorporate the updated information and any reimbursement amounts collected by the District pursuant to the approved reimbursement agreement will be paid to the developer in accordance with the reimbursement agreement.

        ii. If the developer does not respond to the request for updated contact information within the 60-day period, **the right of the developer to receive reimbursement amounts collected by the District shall be terminated** and any amounts collected by the District pursuant to the approved reimbursement agreement shall be retained by the District.

20. When the Reimbursement Agreement reaches its expiration date, fifteen years after the date on the first page of the Reimbursement Agreement, the Reimbursement Agreement shall expire. Any properties that were subject to the Reimbursement Agreement, and that did not connect to the Reimbursement Facilities during the term of the Reimbursement Agreement, but which are connected to the Reimbursement Facilities following expiration of the Reimbursement Agreement shall pay a local facility charge to the District pursuant to District rules and regulations in effect at the time of application for such connection. The local facility charge shall be based on District rates in effect at the time of application for such connection and not at the rate established through the Reimbursement Agreement.

SAMMAMISH PLATEAU WATER AND SEWER DISTRICT

APPLICATION FOR OR WAIVER OF
REIMBURSEMENT AGREEMENT FOR WATER/SEWER FACILITIES

The undersigned _____ ("Applicant") hereby: (initial only one box)

- ❑ Acknowledges that the water and/or sewer facilities constructed pursuant to the developer extension agreement executed by the applicant and the Sammamish Plateau Water and Sewer District on the _____ day of _____, _____ ("D.E. Agreement") are not eligible for reimbursement pursuant to Chapter 57.22 RCW or as amended.

- ❑ Irrevocably waives the right to apply for or receive reimbursement pursuant to Chapter 57.22 RCW or as amended for the water and/or sewer facilities constructed pursuant to the developer extension agreement executed by the applicant and the Sammamish Plateau Water and Sewer District on the _____ day of _____, _____ ("D.E. Agreement").

- ❑ Applies to Sammamish Plateau Water and Sewer District for a Reimbursement Agreement pursuant to the developer extension agreement executed by applicant in District on the _____ day of _____, _____ ("D.E. Agreement").

THIS DOCUMENT, TOGETHER WITH THE INFORMATION LISTED IN **STEP 6** OF THE PROCESS INCLUDED AS ATTACHMENT A, MUST BE SUBMITTED TO THE DISTRICT NO LATER THAN THE PREDESIGN MEETING FOR THE ABOVE-REFERENCED D.E. AGREEMENT. THE DESIGN DRAWINGS WILL NOT BE REVIEWED BY THE DISTRICT UNTIL THE REQUIRED INFORMATION IS REVIEWED AND APPROVED FOR PROCESSING BY THE DISTRICT.

THE EXECUTED, NOTARIZED REIMBURSEMENT AGREEMENT AND ALL SUPPORTING DOCUMENTATION MUST BE SUBMITTED TO THE DISTRICT PRIOR TO THE DISTRICT'S ACCEPTANCE OF THE EXTENSION FACILITIES. THE DEVELOPER MUST RESPOND WITHIN TWENTY-ONE (21) DAYS TO THE DISTRICT'S REQUEST(S) FOR ADDITIONAL INFORMATION OR REVISIONS TO THE REIMBURSEMENT AGREEMENT.

FAILURE TO COMPLY WITH THESE REQUIREMENTS WILL RESULT IN FORFEITURE OF THE DEVELOPER'S RIGHT TO A REIMBURSEMENT AGREEMENT UNDER CHAPTER 57.22 RCW.

Name of Applicant: _____

Name of Project: _____ (per District Resolution)

Description of Project or Project Portion for which reimbursement is requested: _____

_____

_____

Developer shall be responsible for all District labor including overhead and direct expenses associated with engineering review, legal services, administration, setup, mailing, public notification, public hearings and meetings, and recording of the Reimbursement Agreement. The District will provide the Developer with periodic invoices of the District's expenses. Payment for District services is due within 30 days of the date of the invoice. Failure to pay invoices by the due date will result in suspension of all District activities on the Reimbursement Agreement until the invoices are paid in full. Some expenses will be incurred following approval of the Reimbursement Agreement by the District's Board of Commissioners. These expenses include, but are not limited to, District labor, certified mailing costs, and recording fees from King County. No reimbursement payments will be made to the Developer until all District invoices are paid in full.

APPLICANT:

Date: _____

_____
(Signature)

Printed Name: _____

Title: _____

Company Name: _____

Address: _____

_____

Telephone: _____

ATTACHMENT A
DISTRICT REIMBURSEMENT AGREEMENT PROCESS
FOR WATER/SEWER FACILITIES

Pursuant to District Resolution No.**4334**, the procedure for processing reimbursement agreements under a Developer Extension Agreement is as follows:

1. Developer enters into Developer Extension Agreement.
2. Developer meets with District staff in predesign meeting to discuss the proposed design, including any offsite water/sewer facilities, facilities within the project that can provide direct service to other properties, or facilities such as lift stations or booster pump stations that serve a larger area than just the Developer's property.
3. Developer submits signed application/waiver form for reimbursement agreement (required for **ALL** Developer Extension Agreements) no later than the time of the predesign meeting.
4. If the Developer is entering into a reimbursement agreement, the Developer will pay all District expenses on a time-and-materials basis, including labor and overhead, for District services associated with the review, dissemination, adoption, and recording of the reimbursement agreement. Payment for District services is due within 30 days of the date of the invoice. Failure to pay invoices by the due date will result in suspension of all District activities on the Reimbursement Agreement until the invoices are paid in full. No reimbursement payments will be made to the Developer until the invoices are paid in full.
5. Developer prepares design and submits to District.
6. If Developer is applying for a reimbursement agreement, the Developer shall submit the following, and District staff will not review plans until the required submittals have been received in a form acceptable to the District.
   - A map of the reimbursement area: a plan (up to 11"x17" size) showing the facilities to be constructed and tax lots affected by reimbursement agreement;
   - Electronic database containing properties within the proposed reimbursement area (tax lot number, property owner name and mailing address, property owner telephone number);
   - Mailing labels for the property owners of record;
   - Estimated total costs of the water and/or sewer improvements, prepared by a qualified licensed professional engineer, including an estimate of all costs proposed to be included (such as engineering, surveying, testing, landscape restoration, paving, reimbursement agreement administration costs, etc.);
   - Proposed methodology for calculating the pro rata reimbursement charges for each property; and the estimated reimbursement charge to be assessed for each of the parcels in the proposed reimbursement area.
7. District mails notification to each of the owners of real property within the reimbursement area (by certified mail, copy received and by regular U.S. Mail) regarding the estimated proposed reimbursement charge for the proposed reimbursement area. The letter contains an explanation of the methodology proposed to be used, a map showing the real property and the water and/or sewer facilities being installed, the conditions under which the property owners would be required to pay the assessed fees, and the time period for reimbursement.
8. Developer completes the design, which is approved by the District, and the Developer constructs the project.
9. Following District acceptance of the project construction and before the District issues Final Acceptance of the DEA, the Developer submits the following:

- Reimbursement Agreement that has been completed, signed and notarized, including all exhibits. The date on the first page of the Reimbursement Agreement as submitted is the date from which the 15 year term of the Reimbursement Agreement will run.
- Revisions to property owner information for real property to be subject to reimbursement.
- Backup invoices of actual costs incurred

10. Developer receives Final Acceptance for project (resolution from Board)
11. District staff reviews Reimbursement Agreement.
    A. If District staff determines the Reimbursement Agreement and its exhibits are in a form acceptable to the District the Reimbursement Agreement Process continues to the next step.
    B. If District staff finds corrections to the reimbursement agreement or exhibits are required
        i. The Reimbursement Agreement will be returned to the Developer for correction.
        ii. The Developer will have 21 calendar days to resubmit a corrected Reimbursement Agreement.
        iii. If the corrections are not resubmitted to the District within the 21 calendar days, the Developer's Application for Reimbursement Agreement becomes null and void.
        iv. District staff reviews revisions and repeats this step.
12. District staff mails notification to each of the owners of real property within the reimbursement area (by certified mail, copy received and by regular U.S. Mail) regarding the final proposed reimbursement charge for the proposed reimbursement area. The letter contains an explanation of the methodology used, the statutes regarding reimbursement agreements, the conditions under which the property owners would be required to pay the assessed fees, the time period for reimbursement, and how and when the property owners can review the cost information and project data at the District. Property owners are informed to submit comments to the District by a certain date (within 3 weeks) and that the Board of Commissioners will consider the reimbursement agreement at the next regularly scheduled Board meeting following the 3 week period.
13. Following the 3 week comment period, District staff schedules the proposed reimbursement agreement for the next regularly-scheduled Board meeting
14. The Board reviews the proposed reimbursement agreement, together with any comments received by the affected property owners.
    A. If the Board approves the reimbursement agreement, by Resolution, the Reimbursement Agreement Process continues to the next step.
    B. If the Board does not approve the reimbursement agreement in the form proposed, District staff will return the reimbursement agreement to the Developer for modification or correction and repeats step 10 above.
    C. If the Board determines that a reimbursement agreement is not allowable for this development and the facilities included, the reimbursement agreement application will be denied and District staff will mails notification to each of the owners of real property within the proposed reimbursement area (by certified mail, copy received and by regular U.S. Mail) informing them that the reimbursement agreement will not be recorded. The developer will be notified by District staff of the Board's finding and the reimbursement agreement process ends.
15. District staff mails notification to each of the owners of real property within the reimbursement area (by certified mail, copy received and by regular U.S. Mail) informing them that the reimbursement charge will be imposed and the reimbursement agreement will be recorded against their property.

16. District staff submits reimbursement agreement to King County for recording.
17. District staff receives the recorded reimbursement agreement from King County and puts it in the reimbursement agreement notebook
18. As properties included in the reimbursement area submit requests for water/sewer service, District staff will determine if a reimbursement amount is owed. If a reimbursement amount is owing, the District will collect this reimbursement amount as part of the property service connection charges. The District will then process payment to the developer, pursuant to the terms of the reimbursement agreement, of the reimbursement amount collected less a District administration fee of $150 per reimbursement charge collected.
19. **Developer must submit to the District updated contact information every two years plus sixty (60) days, even if there is no change to the contact information,** with the two year date measured from the date on the first page of the reimbursement agreement.
    A. If the Developer submits the required updated contact information every two years plus sixty (60) days, as required, the District will update the developers contact information and any reimbursement amounts collected by the District pursuant to the approved reimbursement agreement will be paid to the developer in accordance with the reimbursement agreement.
    B. If the Developer has not submitted the required updated contact information every two years plus sixty (60) days, as required, and if the District collects reimbursement charges from owners of Benefited Property, the District will then attempt to contact the developer by mail at the contact location most recently provided by the developer, and request the developer confirm and/or update their contact information within 60 days from the date the inquiry is sent, so the District can continue to process the reimbursement agreement.
        i. If the developer responds to the request for updated contact information within the 60-day period, the District will incorporate the updated information and any reimbursement amounts collected by the District pursuant to the approved reimbursement agreement will be paid to the developer in accordance with the reimbursement agreement.
        ii. If the developer does not respond to the request for updated contact information within the 60-day period, **the right of the developer to receive reimbursement amounts collected by the District shall be terminated** and any amounts collected by the District pursuant to the approved reimbursement agreement shall be retained by the District.
20. When the Reimbursement Agreement reaches its expiration date, fifteen years after the date on the first page of the Reimbursement Agreement, the Reimbursement Agreement shall expire. Any properties that were subject to the Reimbursement Agreement, and that did not connect to the Reimbursement Facilities during the term of the Reimbursement Agreement, but which are connected to the Reimbursement Facilities following expiration of the Reimbursement Agreement shall pay a local facility charge to the District pursuant to District rules and regulations in effect at the time of application for such connection. The local facility charge shall be based on District rates in effect at the time of application for such connection and not at the rate established through the Reimbursement Agreement.

This page intentionally left blank.

Appendix I

Developer Extension Agreement

This page intentionally left blank.

SAMMAMISH PLATEAU WATER & SEWER DISTRICT
KING COUNTY, WASHINGTON

RESOLUTION NO. 4738

RESOLUTION OF THE BOARD OF COMMISSIONERS OF SAMMAMISH PLATEAU WATER AND SEWER DISTRICT, KING COUNTY, WASHINGTON, AUTHORIZING AND APPROVING THE FORM DISTRICT DEVELOPER EXTENSION AGREEMENT AND DISTRICT STANDARD TECHNICAL SPECIFICATIONS

WHEREAS, parties desiring to undertake certain land use actions, such as subdivision of, development of, and construction upon real property within the Sammamish Plateau Water and Sewer District ("District") requiring the extension of the District's water and/or sewer utility systems have been required to do so by developer extension agreement with the District pursuant to Chapter 57.22 RCW; and

WHEREAS, the District, by adoption of Resolution No. 4333 on April 7, 2014, updated, revised and readopted a form developer extersion agreement and associated fee schedule; and

WHEREAS, District staff has updated and revised the portion of such form developer extension agreement entitled District Technical Specifications, in the form included in "Exhibit A" and incorporated herein by this reference; now, therefore,

BE IT RESOLVED, by the Board of Commissioners of Sammamish Plateau Water & Sewer District, King County, Washington, as follows:

1. The developer extension agreement for construction extensions to the District's water and sewer systems in the form attached hereto as Exhibit "A" is hereby approved and adopted for use in the District effectifve the date of the adoption of this resolution.

2. All District resolutions, policies, and procedures, including Resolution No. 4333 are hereby susperseded, rescinded and modified to be in accordance with such amendment to the form developer extension agreement.

3. This resolution and the policies and procedures set forth herein shall be effective the date set forth below.

ADOPTED by the Board of Commissioners of Sammamish Plateau Water and Sewer District, King County, Washington, at a regular open public meeting held on the 9th day of October 2017.

Individual Commissioner's Vote on this Resolution:

Karen Moran, President and Commissioner

Mahbubul Islam, Vice President and Commissioner

Mary Shustov, Secretary and Commissioner

Tom Harman, Commissioner

Lloyd Warren, Commissioner

Sammamish Plateau Water

DEVELOPER EXTENSION AGREEMENT

Extension _____

_____

_____

Developer _____

_____

_____

Date _____

Water _____ Sewer _____

SAMMAMISH PLATEAU WATER AND SEWER DISTRICT

1510 – 228th Avenue SE
Sammamish, Washington 98075
Telephone Number: (425) 392-6256 Fax Number: (425) 391-5389
www.spwsd.org

COMMISSIONERS
Thomas C. Harman, Commissioner
Karen Moran, Commissioner
Mary Shustov, Commissioner
Lloyd J. Warren, Commissioner
Mahbubul Islam, Commissioner

GENERAL MANAGER
John C. Krauss

PLANNING ENGINEER
Jay Regenstreif, P.E.

ENGINEERING MANAGER
Kyle Wong, P.E.

ENGINEERING STAFF
John Faille, E.I.T.
Jackson Dove, P.E.
James E. Konigsfeld, P.E.
Jon Bork, Inspector
Mike Lillejord, Inspector
James Whitney, Inspector
Jan McLean, Developer Extension Coordinator
Karen Terrell, Administrative Assistant

GIS STAFF
Kevin DeRouen
Brett Angel

ATTORNEY
John Milne, Attorney
Inslee, Best, Doezie, & Ryder, P.S.
Skyline Tower – 10900 NE 4th St, Suite 1500
P.O. Box C-90016
Bellevue, Washington 98009-9016
Telephone Number: (425) 455-1234 Fax Number: (425) 635-7720

Development Name: _____

Water _____ and/or Sewer _____

DISTRICT CHECKLIST

Preliminary Fee Phase **Date**

1. Development Proposal Provided to District with Application and Application Fee _____
2. Equivalent Residential Units (ERUs) Calculated _____
3. District Check Compliance with Comprehensive Plans _____
4. Determine if Project within Urban Growth Boundary (sewer) _____
5. Determine Need for Special Agreements _____
   - Future Water or Sewer Connection Agreement
   - No-Protest Annexation Agreement
   - Future Services upon Subdivision
   - Future LFC Acknowledgement
   - Additional Future LFC Owing
   - Interim Sewer Amendment
   - Participation Agreement
   - Other _____
6. Developer Signs Developer Extension Agreement _____
7. **Pay Partial Preliminary/Certificate Fees and Development Services Deposit**
   Receipt #____ _____
8. District Approves Extension Agreement by Resolution #_____ _____
9. Complete Certificate of Water and/or Sewer Availability if required _____
10. Provide Certificate(s) & Signed Agreement to Developer _____
11. District Records Notice of DEA on Property included in DEA _____

==========

Design Phase **Date**

12. Developer Engineer Identified
    - Submit Public Information Request for surrounding facilities as-built drawings _____
    - Submit draft Preliminary Plat, Road/Storm/Grading Plan for District review _____
13. Developer Executes Application for or Waiver of Reimbursement Agreement _____
14. Pre-Design Meeting _____
15. Board of Commissioners Approves Participation Agreement _____
16. District and Developer Execute Participation Agreement _____
17. Developer Submits Design Drawings (3 sets) and Preliminary Estimate of Construction Cost to District _____
18. District Sends Notification to Benefited Property(ies) for Reimbursement Agreement _____

_____ **Date**

Development Name: _____

Water _____ and/or Sewer _____

---

19. **Remaining General Facility Charges are due prior to District approval of plans for construction, prior to installation of water meters and/or sale of side sewer permit(s), or prior to Final Acceptance if no construction is required** _____

20. Reevaluate ERU Calculations _____

21. **Pay Remaining General Facility Charges** **Receipt #____** _____

22. Final Plan Approved/Mylars Signed by District _____

23. Mylars Returned to Engineer _____

24. Most Current District Standards Provided to Developer Engineer for Inclusion with Copies of Construction Drawings _____

25. Developer Provides District Plan Sets _____

	#
a. PDF of Signed Construction Plans for input to GIS	Electronic
b. Developer Extension File	1 (Full-size w/standards)
Developer Extension File	1 (11"x17" w/standards)
c. In house copy/Flat File	1 (Full-size w/standards)
d. Inspectors	1 (Full-size w/standards)
e. Permits/Approvals (Full-size Drawings)	
1) Right of Way – Water (half-size for City of Sammamish)	Electronic, 2 (11"x17")
2) Right of Way – Sewer (half-size for City of Sammamish)	Electronic, 2 (11"x17")
3) King County DNR - Sewer	Electronic
4) DOH - Water	1 (if not exempt)
5) City of Sammamish or Issaquah	Electronic
6) Other - _____	

***Note: All other permits are the responsibility of the Developer**

26. Permit/Approval Applications

a. Right of Way - Water	Sent _____	Approved _____
b. Right of Way - Sewer	Sent _____	Approved _____
c. King County DNR - Sewer	Sent _____	Approved _____
d. DOH - Water if not exempt	Sent _____	Approved _____
e. King County Special Use Permit	Sent _____	Approved _____
f. Other - _____	Sent _____	Approved _____

27. SEPA Checklist (required for pipe > 8")
    a. Submit draft checklist for District review _____
    b. Determination _____
    c. Notice of Action _____

==========

Preconstruction Phase **Date**

28. Offsite Easements Acquired by Developer and Provided to District _____

29. Copy of Clearing and Grading Permit Provided to District by Developer (if Project not in Right-of-Way) _____

30. Materials and Equipment Submittals Provided to District (3 copies) _____

31. Certificate of Insurance including Endorsements Provided to District _____

32. Submit Copy of Itemized Water/Sewer Construction Bid for Cost Verification _____

33. Performance Guarantee Provided to District _____

Date

Development Name: _____

Water _____ and/or Sewer _____

34. Preconstruction Conference at District Office _____

35. Right-of-Way Preconstruction Conference at Job Site _____

Construction/Final Acceptance Phase **Date**

36. Minimum 48 Hour Notice to District of Construction Start _____

37. Construction, with Inspection by the District _____

38. Contractor Performs Jetting and CCTVing of Project's Sewer System with District Inspection to confirm proper sewer installation _____

39. Developer Performs Final Paving or Submits "Agreement for System Use Prior to Final Lift of Asphalt" for District Approval _____

40. Contractor Performs Jetting of Project's Sewer System with District Inspection _____

41. Contractor Declares Construction Complete and District Acknowledges Declaration _____

42. Surveyor Surveys Final As-built Locations of all Facilities and Developer Engineer Prepares/Submits Point-Plot Map Superimposed on District-approved Construction Drawings, together with Contractor Markups and 2 Sets of Draft As-built Plans with the Electronic AutoCAD files _____

43. District Inspector Reviews Point-Plot Drawings, Draft As-Built Plans, and Contractor's Field Notes, and Performs Field Check _____

44. Contractor Requests Final Punchlist Inspection _____

45. District Inspector Prepares Punchlist _____

46. **Punchlist Inspection Approved by District = Construction Final** _____*

47. District Engineer Reviews/Returns Draft As-Built Plans to Developer Engineer for Revisions _____

48. Developer Engineer submits 2 sets of Revised, Unsigned As-Built Plans _____

49. District Engineer Reviews Final As-Built Plans and Requests Mylars _____

50. **As-Built Drawings**

Developer Engineer Submits to District:

a. Mylars with As-Built revisions for District signature _____*

b. District returns signed As-Built mylars for reproduction _____*

c. Developer Engineer Returns to District

1) 3 sets of full-size As-Built Drawings w/o District standards _____*

2) 1 set of full-size As-Builts Drawings with District standards(23-Month) _____*

3) 1 set 11"x17" As-Builts Drawings w/o District standards _____*

4) As-Built AutoCAD files including point-plot files _____*

5) Scanned (.PDF) Files _____*

_____

51. District Enters As-built Drawings into Geographic Information System _____

52. District Inspector Inputs Data into Asset Management System _____

_____

Development Name: _____

Water _____ and/or Sewer _____

			Date
53.	**Easements Provided to District for Recording**	**Water**	_____*
		Sewer	_____*
54.	District Records Easements with King County		_____
55.	**Copy of Development Documents to be Recorded with County Provided to District**		
	a. Verify Easement Locations		_____*
	b. Verify Easement Restrictions		_____*
56.	**Bill(s) of Sale Provided to District**	**Water**	_____*
		Sewer	_____*
57.	**Developer Provides Final Cost Summary for Construction of Water and/or Sewer Facilities**		_____*
58.	Developer Provides Copy of Recorded Development Documents		_____#
59.	Developer Submits Executed Reimbursement Agreement if Appropriate		_____
60.	District Processes Reimbursement Agreement		_____
61.	Reevaluate ERU Calculations		_____
62.	Calculate Final Acceptance Fees		_____
63.	District Checks for Unpaid Invoices Owing for District Expenses		_____
64.	**Payment of Final Acceptance Fees**	**Receipt #_____**	_____*
65.	**Maintenance Guarantee Provided to District**		_____*
66.	**Backflow Prevention Assembly Test Report(s) Provided to District**		_____*
67.	Letter to Health Department, King County and/or City Stating District Acceptance		_____
68.	District Prepares Meter Page		_____
69.	District Prepares DOH "Completion Report"		_____

* Indicates Items required for Final Acceptance of the Developer Extension Agreement by the District. The Date of Final Acceptance is the Date that the last item required was received. The Maintenance Guarantee is to be in force for at least two years from the Date of Final Acceptance.

		Date YES/NO
70.	Approved System Use Prior to Final Asphalt Lift If YES, Maintenance Guarantee is in effect until 2 years AFTER District Final Inspection and Acceptance Following the Final Lift of Asphalt. This means the Maintenance Guarantee will be in effect for a period longer than 24 months on the entire system.	
71.	**Resolution Accepting Extension(s) Adopted by the Board**	_____
72.	Determine Final ERUs and Include in Final Resolution	_____

Development Name: _____

Water _____ and/or Sewer _____

Two- Year Post Acceptance Warranty Phase		**Date**
73.	District Accepts Meter and Side Sewer Applications	_____
74.	District Releases Performance Guarantee	_____

==========

23-Month Inspection Phase		
75.	Developer Performs Jetting of Project Sewer System Immediately Prior to 23-month Inspection	_____#
76.	District Performs 23-Month Inspection	_____
77.	District Provides Punchlist of Inspection to Developer	_____
78.	Correction of Punchlist Items by Developer	_____#
79.	Current Backflow Prevention Assembly Test Report(s) provided to District	_____#
80.	District Checks for Unpaid Invoices by Developer	_____#
81.	District releases Maintenance Guarantee	_____
82.	District Refunds Development Services Deposit	_____

# Indicates items required for the release of the Maintenance Guarantee and refund of Development Services Deposit.

==========

SAMMAMISH PLATEAU WATER AND SEWER DISTRICT

DEVELOPER EXTENSION AGREEMENT

TABLE OF CONTENTS

Page

CHECKLIST C-1

GENERAL PROVISIONS, WATER AND SEWER

WS-1 DEFINITIONS WS-1
WS-2 PURPOSE WS-2
WS-3 DEVELOPER TO BE INFORMED WS-2
WS-4 NO THIRD PERSON SHALL HAVE ANY RIGHTS HEREUNDER WS-2
WS-5 AUTHORITY OF PROJECT ENGINEER WS-2
WS-6 SELECTION OF PROJECT ENGINEER WS-3
WS-7 AUTHORITY OF DISTRICT WS-3
WS-8 OWNERSHIP OF PLANS WS-3
WS-9 SPECIFICATIONS INCORPORATED BY REFERENCE WS-3
WS-10 PERMITS WS-3
WS-11 PERFORMANCE GUARANTEE WS-4
WS-12 LIABILITY INSURANCE WS-4
WS-13 INDEMNITY WS-5
WS-14 NO DISCRIMINATION IN EMPLOYMENT WS-5
WS-15 NOTICE OF DEVELOPER EXTENSION AGREEMENT WS-5
WS-16 GOVERNING LAWS WS-5
WS-17 ROYALTIES AND PATENTS WS-5
WS-18 CONTRACTORS WS-5
WS-19 EXISTING UTILITIES OR OBSTRUCTIONS WS-6
WS-20 MATERIAL AND EQUIPMENT LIST WS-6
WS-21 GUARANTEE BY MANUFACTURER WS-6
WS-22 DETERMINATION OF "OR EQUAL" WS-6
WS-23 DEVELOPER'S SUPERVISION WS-7
WS-24 COMPLIANCE WITH PUBLIC AUTHORITY WS-7
WS-25 OMISSIONS AND DISCREPANCIES WS-7
WS-26 USE OF COMPLETED PORTIONS WS-7
WS-27 POINTS AND INSTRUCTIONS WS-8

WS-28 STAKING OF WORK WS-8
WS-29 USE OF WATER WS-8
WS-30 INSPECTION AND TESTS WS-8
WS-31 PLANS AND SPECIFICATIONS ACCESSIBLE WS-8
WS-32 QUALITY OF MATERIALS AND WORKMANSHIP WS-9
WS-33 SAFETY WS-9
WS-34 SANITATION WS-9
WS-35 SERVICE INTERRUPTIONS WS-9
WS-36 ACCESS WS-9
WS-37 PUBLIC HAZARD OR INCONVENIENCE WS-9
WS-38 TRAFFIC MAINTENANCE AND PROTECTION WS-9
WS-39 CONFINEMENT OF CONTRACTOR'S OPERATIONS WS-10
WS-40 PROTECTION OF WORK AND PROPERTY WS-10
WS-41 OTHER WORK WS-10
WS-42 PAVEMENT REMOVAL WS-11
WS-43 CLEANUP WS-11
WS-44 FINAL INSPECTION AND ACCEPTANCE WS-11
WS-45 DEFECTIVE WORK AND CORRECTIVE ACTION WS-11
WS-46 RESTORATION OF IMPROVEMENTS WS-12
WS-47 "AS-BUILT" DRAWINGS WS-12
WS-48 MAINTENANCE GUARANTEE WS-12
WS-49 LIENS WS-13
WS-50 EASEMENTS WS-13
WS-51 BILL OF SALE WS-14
WS-52 CROSS CONNECTION CERTIFICATION WS-14
WS-53 REIMBURSEMENT APPLICATION WS-14
WS-54 RATES AND CHARGES WS-14
WS-55 DEVELOPER EXTENSION AGREEMENT TERMINATION WS-14
WS-56 INCORPORATION OF CERTIFICATE(S) OF AVAILABILITY WS-15

WATER AND/OR SEWER EXTENSION(S)

PROJECT INFORMATION A-1
APPLICATION AND AGREEMENT TO CONSTRUCT A-2
1. Location of Water and/or Sewer System Extension(s). A-2
2. Warranty of Authority. A-2
3. No Assignment Without District Approval. A-2
4. Description of Extension(s). A-2
5. Fees to be paid by the Developer. A-3
(A) Preliminary Fees A-3
(B) Development Services Fee A-4
(C) Flushing/Jetting Water A-5
(D) Final Acceptance Fees A-5
Water Fee Summary Sheet A-11
Sewer Fee Summary Sheet A-14
Calculation Sheets:
Equivalent Residential Unit (ERU) Calculations A-17
General Facility Charge (GFC) Adjustments A-18
Development Services Fee Rate Schedule A-19
Supplemental Developer Agreement Fee Schedule A-20
6. Preparation of Plans A-21
7. Technical Detail and Specifications. A-22
8. Permits and Approvals by other Agencies A-22
9. Performance Guarantee. A-22
10. Subletting and Subcontracting A-23
11. Preconstruction Meeting A-23
12. Work Performed Outside of Normal District Work Hours (Overtime) A-24
13. Final Acceptance - Conditions Precedent. A-24
14. Warranties of Developer. A-27
15. Procedure for Acceptance. A-27
16. Effect of Acceptance. A-27
17. Provision of Service. A-27
18. Phased Construction. A-28
19. Use and Operation of System Prior to Final Acceptance. A-29
20. Limitation of Period of Acceptance. A-29
21. Inspection/Corrections of Defects Occurring Within Maintenance Period A-29
22. Cleaning of Sewer System Within Maintenance Period A-30
SIGNATURE PAGE - DEVELOPER A-31
SIGNATURE PAGE - OWNER A-32

FORMS ..... SEE SECTION FOR CONTENTS OF "FORMS"

TECHNICAL SPECIFICATIONS ..... SEE SECTION FOR CONTENTS OF "TECHNICAL SPECIFICATIONS"

GENERAL PROVISIONS WATER AND SEWER

WS-1 DEFINITIONS

(a) "Contractor" means the person or firms employed by the Developer to do any part of the work, all of who shall be considered agents of the Developer.

(b) "Design" means the preparation of the Plans for the extension to the District's water distribution and/or sewer collection system.

(c) "Developer" means the party(s) entering into this Agreement with the District, including the Owner(s) and the Owner's Agent(s) (if applicable), as defined herein.

(d) "District" means Sammamish Plateau Water and Sewer District, its authorized representatives, and the District Engineer.

(e) "District Engineer" means the District Engineering Staff or the engineering firm, and that firm's representatives, which may be retained and assigned by the District Board of Commissioners to act as the Engineer for the work to be performed under this agreement.

(f) "Extension" means the water and/or sewer lines and appurtenances to be constructed and installed through Developer's performance of this developer extension agreement.

(g) "Inspection" means the District examination of the Work wherever it is in preparation or progress, and reasonable tests of the work.

(h) "Otherwise Specified" or "As Specified" means the directions contained in the Plans, Special Specifications, if any and otherwise as given by the District incident to the performance of the work other than in these General Specifications.

(i) "Owner" means the fee owner of the real property benefited by the proposed extension of the District's water distribution and/or sewer collection system.

(j) "Owner's Agent(s)" means a party, firm, or entity that, by agreement with the Owner, is developing the real property, which is the subject of and to be benefited by the proposed extension to the District's water distribution and/or sewer collection system.

(k) "Plans" means drawings, lists, notes and instructions, including reproductions thereof, of the work to be done as an extension to the District's water distribution and/or sewer collection system, prepared or approved by the District's Engineers.

(l) "Project" means the subdivision, plat, short plat, commercial development, multi-family development, building or other facility or improvement for which the extension of the water and/or sewer system is being undertaken.

(m) "Project Agent" means a party or firm, on behalf of the Developer, that facilitates the Project through the Developer Extension process.

(n) "Project Engineer" (also known as “Developer’s Engineer) means the engineering firm, and that firm's representatives, retained by Developer, to design and prepare the Plans for the work to be performed under this agreement in accordance with District specifications.

(o) “Real Property” means the property(ies) owned by the Developer, and/or other owners for whom the Developer is acting as agent, for which the Extension is being installed.

(p) "Specifications" means the directions, provisions, standards and requirements established by the District's Engineers for the performance of the work and for the quantity and quality of materials.

(q) "Work" means the labor, materials, superintending, equipment, transportation, supplies and other facilities necessary or convenient to the completion of the proposed extension described in the application contained herein.

WS-2 PURPOSE

Sammamish Plateau Water and Sewer District, as a municipal corporation, has a responsibility to the public to insure that water and sewer mains laid on public streets or easements are constructed in accordance with currently accepted standards for public work. The requirements imposed upon Developers by these regulations are not arbitrary, but are intended by the District as a contract with the Developer, incorporating minimum standards which are prerequisite to acceptance of the work by the District as a part of its water and sewer systems. Privately constructed extensions will not be permitted thereto unless the work is performed and paid for in accordance with these regulations.

WS-3 DEVELOPER TO BE INFORMED

The Developer is expected to be fully informed regarding the nature, quality and extent of the work to be done, and if in doubt, to secure specific instructions from the District.

WS-4 NO THIRD PERSON SHALL HAVE ANY RIGHTS HEREUNDER

This agreement is made entirely for the benefit of the District and the Developer and successors in interest and no third person or party shall have any rights hereunder whether by agency or as a third-party beneficiary or otherwise.

WS-5 AUTHORITY OF PROJECT ENGINEER

The Developer shall have the right to select its own engineer to design and prepare the Plans. The Project Engineer shall only have authority to design and prepare the Plans for the extension to the District's water distribution and/or sewer collection system. Design work shall be in accordance with prudent engineering practice and all applicable governmental regulations and laws. The Plans shall conform in all respects to District specifications and must be approved by the District Engineer prior to commencement of work. The District shall have the sole right to approve or reject the Plans or require changes to be made to them. Failure of the District to require changes in the Plans prior to approval of them shall not be deemed a waiver of the District's right to require such changes in the Plans as the District may deem necessary during the course of Work. It is the responsibility of the Developer to ensure that the Plans prepared by Project Engineer conform in all respects to District

Specifications. Failure by the District to discover errors, omissions or discrepancies in the Plans shall not relieve the Developer of this responsibility.

WS-6 SELECTION OF PROJECT ENGINEER

At the time of Developer's payment of Development Services Fees to the District, the Developer shall notify the District in writing of the person or firm proposed to do the Design. The Developer shall not employ any person or firm for any part of the Design work that the District may object to as incompetent, unfit or irresponsible.

WS-7 AUTHORITY OF DISTRICT

The District shall have authority to approve, reject or require changes in Plans prepared by Project Engineer. The District shall also have authority to require such changes in the Plans as the District may deem necessary during the course of work. The District shall have general supervision and direction of work and shall have authority to stop work whenever, in the opinion of the District, the work stoppage shall be necessary to insure compliance with the approved Plans and Specifications. The District shall have authority to reject work and materials that do not conform to the approved Plans and Specifications and permit requirements and to decide questions that may arise in the execution of the work.

Failure or omission on the part of the District to reject unsuitable, inferior or defective work shall not release the Developer or Developer's bond from performing work in accordance with this contract. District representatives have no authority to waive the obligation of the Developer to perform work in accordance with this contract.

WS-8 OWNERSHIP OF PLANS

All Plans and Specifications prepared by the Project Engineer and submitted to the District as a condition of this contract shall be owned by and be the property of the District. The Project Engineer agrees to assign all ownership and use rights to the Plans and Specifications to the District.

WS-9 SPECIFICATIONS INCORPORATED BY REFERENCE

Where federal, AWWA, ASTM, WASHDOT/APWA, King County, City of Sammamish, City of Issaquah, District or any other standard specifications are referenced to or included by reference herein, the latest issue and/or amendment thereto published at the date of approval of the Drawings by the District shall be incorporated in the contract by said reference as if set forth herein in full. Should a conflict exist between the approved design drawings and any standard specifications or details referenced herein, the approved design drawings shall prevail.

WS-10 PERMITS

The Developer shall not begin work until all necessary permits have been issued by the appropriate public authority. The Developer shall reimburse the District for all costs incurred by the District for permits, inspection fees and other charges imposed by any public authority because of the work. The Developer shall comply with the requirements of all permits issued for the work.

WS-11 PERFORMANCE GUARANTEE

Developer shall provide District with a Performance Guarantee, of a type and form (Cash, Performance Bond, Letter of Credit) as determined by the District in its sole discretion, to guarantee the completion of the construction of the facilities. It shall be provided prior to the time of the Preconstruction Meeting and shall run until such time as the District has; 1) accepted the work, including final inspection and acceptance in the field, and receipt of as-built drawings, Bill of Sale, fees owing to the District, and Maintenance Guarantee or 2) otherwise agreed to release the Performance Guarantee pursuant to Paragraph WS-55 "Developer Extension Termination". The Performance Guarantee shall be in the amount of the cost of installation of facilities covered under the Developer Extension Agreement. Such amount shall be determined by the Engineer's estimated cost of the extension or the Contractor bid price at the election of the District.

WS-12 LIABILITY INSURANCE

The Developer shall procure commercial general liability, automobile liability, excess/umbrella liability, and workers compensation insurance on an occurrence basis against liability to the developer, the District, the District Engineer and the District employees for negligent injury to person or property related in any way to the performance of this Agreement and/or resulting from performance, supervision, or inspection of the work. The District shall be named as an additional insured/certificate holder under such policy. Proof of the existence of such insurance shall be provided to the District by original certificate of insurance and endorsements in the form attached hereto. The minimum limits of coverage shall be as follows:

1. Commercial General Liability
    - $2,000,000 each occurrence Bodily Injury and Property Damage
    - $2,000,000 General Aggregate
    - Employees and Volunteers as Additional Insured for both on-going and completed operations
    - Premises and operations
    - Broad form property damage including underground, explosion and collapse hazards (XCU)
    - Products completed operations (through guaranty period)
    - Blanket contractual
    - Subcontractors
    - Personal Injury with employee exclusion deleted
    - Employers liability (Stop gap)

2. Automobile Liability
    - $2,000,000 per accident Bodily Injury and Property Liability covering:
        - Any owned automobile
        - Hired automobiles
        - Non-owned automobile

3. Umbrella Liability
    - $2,000,000 per occurrence
    - $2,000,000 aggregate

4. Workers Compensation and Employers' Liability
    - $2,000,000 per occurrence
    - $2,000,000 aggregate

WS-13 INDEMNITY

The Developer shall indemnify, defend and hold the District and all its representatives harmless from and against all losses and claims, demands, payments, suits, actions, recoveries and judgments of every nature and description brought or recovered against the District by reason of the act or omission of the Developer, Developer's agents or employees, in the performance of the work, and for any cost or expense incurred by the District in connection therewith, including overhead expense, legal expense, attorney's fees and costs attributable thereto; and if suit in respect to the foregoing is filed, the Developer shall appear and defend the same at its own cost and expense, and if judgment is rendered or settlement made requiring payment of damages by the District, the Developer shall pay the same.

WS-14 NO DISCRIMINATION IN EMPLOYMENT

In connection with the performance of work, the Developer and Contractor shall comply with all federal, state and local codes, statutes and ordinances prohibiting employment discrimination.

WS-15 NOTICE OF DEVELOPER EXTENSION AGREEMENT

District shall have the right to record notice of the Developer Extension Agreement on the Real Property which is the subject of this Developer Extension Agreement. The Notice will be recorded with the King County Recorder’s Office.

WS-16 GOVERNING LAWS

This agreement shall be construed and enforced in accordance with, and the validity and performance hereof shall be governed by the laws of the State of Washington. Any suit to enforce the provisions of the agreement shall be brought in King County, Washington, Superior Court.

WS-17 ROYALTIES AND PATENTS

Developers shall pay all royalties and license fees and defend all suits or claims for infringement of any patent rights and shall hold the District harmless on account thereof, except the District shall be responsible for all such loss if a particular process or the product of a particular manufacturer is specified by the District, unless the Developer or Developer's Contractor has information that the process or article is an infringement of a patent and fails to promptly notify the District thereof in writing.

WS-18 CONTRACTORS

At least five (5) days prior to the start of work by any person or firm, the Developer shall notify the District in writing of the name of the person or firm proposed to do the work and shall not employ any person or firm for any part of the work that the District may object to as incompetent, unfit, or irresponsible. Nothing contained in this agreement shall create any contractual rights between the District and any person or firm employed to do the work.

WS-19 EXISTING UTILITIES OR OBSTRUCTIONS

Existing utilities and obstructions shall be shown on the Plans so far as known to the Project Engineer responsible for the preparation of the Design, but may have been obtained from old drawings or verbally from persons connected with a particular utility. Such information is not guaranteed but is made available to the Developer for such value as it may have. Incompleteness or errors in this information shall not be the cause of claim against the District nor shall it relieve the Developer of responsibility for repairing any damage Developer's activities may cause to such utilities. The Developer shall reimburse the District for damage to the property of the District or damage to the property of others for which the District is liable, caused by the Developer and for other expense, including attorney's fees and court costs incurred by the District because of such damage. Whenever the Contractor fails to repair or restore existing improvements damaged by Contractor's operators within 72 hours of notice from the District to effect such repair and restoration, the District may order said work done by others and all costs incurred shall be paid by the Developer. The District recommends the use of One-Call for underground utility locations, of which the telephone number is available at the District Office.

WS-20 MATERIALS AND EQUIPMENT SUBMITTAL

The Developer shall submit three (3) copies of the materials and equipment submittal with the District no later than ten (10) calendar days prior to the beginning of construction, including the quantity, manufacturer, model number and technical specifications, if applicable, of material and equipment to be installed as part of the work. The submittal shall include the manufacturers' information ("catalog cuts") for specified material and equipment, including information on operation and maintenance of the material and equipment. Information shall be furnished to the District in three (3) separate, labeled binders. The District shall have the right to reject materials and equipment which, in the District's opinion, do not conform to District Specifications and the approved Plans. Failure of the District to reject materials and equipment at the time the list is filed shall not be deemed a waiver of the District's right to reject such materials or equipment at a later time.

WS-21 GUARANTEE BY MANUFACTURER

If requested by the District or the District Engineer, a written guarantee made by the manufacturer of any materials to be incorporated into the work shall be furnished, guaranteeing to the District that such materials shall conform to District Specifications and the Specifications otherwise applying to the work.

WS-22 DETERMINATION OF "OR EQUAL"

The District shall be the sole and final judge whether pipe, supplies, materials, and other components or equipment qualify as "or equal" substitutions under the Plans and Specifications.

WS-23 DEVELOPER'S SUPERVISION

The Developer shall keep on the work, during its progress, a competent supervisor who shall represent the Developer during Developer's absence, and to whom instructions may be given as though to the Developer. The Supervisor shall make themselves familiar with the terms and conditions of this Developer Extension Agreement, the Plans and Specifications and shall promptly report to the District any error, inconsistency or omission which they may discover.

WS-24 COMPLIANCE WITH PUBLIC AUTHORITY

The work shall be done in accordance with regulations of each public authority, including the local, county, state and federal agencies that may have jurisdiction over the manner and quality of performance of the work. The public shall not be inconvenienced unnecessarily in its use of the public streets. The Developer shall enforce discipline and good order among its employees and shall not employ on the work any unfit person or anyone not skilled in the work assigned to them. Employees or agents of the Developer, who may impair the quality of the construction, shall be removed from the work upon the written request of the District.

All construction in public roads or rights-of-way shall be done in accordance with the standards and requirements of the governmental agency having jurisdiction, and in accordance with requirements of the franchise or permit therefore. The Developer and Contractor shall be responsible to ascertain these requirements.

WS-25 OMISSIONS AND DISCREPANCIES

Minor items of work or materials omitted from Plans and Specifications, but clearly inferable from the same and which are called for by accepted good practice, shall be provided and/or performed by the Developer as part of the construction. In case of doubt, the District shall be consulted and its decision shall be determinative.

The Developer shall carefully study and compare all drawings, specifications, and other constructions and shall report in writing to the District any error, inconsistency or omission. If in the course of construction any discrepancies between the drawings and the physical condition of the site are found the Developer shall notify the District immediately in writing. Any work done after such discovery and before District approved changes to the Plans and Specifications will be done at the Developer's risk.

WS-26 USE OF COMPLETED PORTIONS

The District shall have the right to take possession of and use any completed or partially completed portions of the work although the time may not have expired for completing the entire work, and this shall not be deemed acceptance of any of the work. However, the District is not obligated to supply service to the Developer's property until all work and the requirements of the Developer Extension Agreement are completed and the Developer Extension Agreement is granted Final Acceptance by the District.

WS-27 POINTS AND INSTRUCTIONS

The Developer shall provide all property corners, and street and easement centerline stakes, and shall provide reasonable and necessary opportunities and facilities for setting points and making measurements. The Developer shall not proceed until they have made timely request of the District for, and have received, such points and instructions as may be necessary as the work progresses. The work shall be done in strict conformity with such points and instructions. The Developer shall carefully preserve bench marks, reference points and stakes, and, in case of destruction, shall be charged for any resulting expense such as the cost of restaking and shall be responsible for any errors that may be caused by their absence or disturbance.

WS-28 STAKING OF WORK

The Developer shall be responsible for providing the Contractor with survey staking necessary to install the work as shown on the plans. The survey staking shall be performed by persons skilled in the practice.

WS-29 USE OF WATER

The Developer shall be charged, pursuant to District resolution, for all water used in construction, street cleaning or other use. The cost of water used for flushing the water mains and/or for jetting the sewer mains during construction is included in the Development Services Fee that is incorporated in this Agreement. If repeated flushing/jetting of the main(s) is necessary and the District determines the flushing/jetting is beyond that covered by the fees referenced above, the Developer shall be charged for the water use not covered by the Development Services Fee.

WS-30 INSPECTION AND TESTS

All work shall be subject to full-time inspection by the District. The District shall at all times have access to the work wherever it is in preparation or progress, and the Developer shall provide proper facilities for such access and inspection. The Developer shall make reasonable tests of the work at the Developer's expense upon the District's request. Whenever work must be specially tested or inspected for compliance with public regulations, or with the Plans and Specifications, the Developer shall give the District reasonable notice of the readiness of the work for such test or inspection. The District will attempt to make inspections within 24 hours of notification by the Developer. Work shall not be covered up without consent of the District, and if it should be covered without such consent, it must be uncovered for inspection at the Developer's expense if requested by the District. Such inspections and test shall not relieve the Developer of any of the responsibilities under this Agreement.

WS-31 PLANS AND SPECIFICATIONS ACCESSIBLE

The Developer shall have one copy of the Approved Plans and Specifications constantly accessible on the job.

WS-32 QUALITY OF MATERIALS AND WORKMANSHIP

Unless otherwise specified, all materials shall be new, and workmanship and materials shall be of the highest quality commonly used. The Developer shall, if required, furnish satisfactory evidence as to the kind and quality of materials.

WS-33 SAFETY

The Developer and Developer's Contractor will be solely and completely responsible for conditions of the job site, including safety of all persons and property during the performance of the work. This requirement will apply continuously and not be limited to normal working hours.

The duty of the District to conduct construction review of the Contractor's performance is not intended to include review of the adequacy of the Contractor's safety measures in, on or near the construction site.

WS-34 SANITATION

Necessary sanitation convenience for the use of workmen on the job, properly excluded from public observation, shall be provided and maintained during the performance of the work.

WS-35 SERVICE INTERRUPTIONS

The Developer shall notify the District at least five (5) working days before an interruption of service is scheduled to occur. The District will notify persons whose service will be interrupted due to the work covered herein. Service interruptions shall not be scheduled on Friday.

WS-36 ACCESS

Bridging shall be provided across private driveways and roadways during the period when trenches are open to avoid interference with normal traffic flow.

WS-37 PUBLIC HAZARD OR INCONVENIENCE

If the performance of the work should result in hazard or substantial inconvenience to the public, the District may correct the same, if in the opinion of the District, the correction is necessary. The Developer shall, on request, reimburse the District for the expense incurred. The Developer shall also reimburse the District for the expense incurred in complying with any order of public authority lawfully made with respect to the work during the performance of the work or within one year after final acceptance of the same.

WS-38 TRAFFIC MAINTENANCE AND PROTECTION

All work shall be performed with due regard for the safety and convenience of the public and so that interference with automotive and pedestrian traffic will be minimized. Flagging personnel, barricades, signs and traffic control furnished or provided shall conform to the standards established in the latest

edition of the Manual on Uniform Traffic Control Devices. The District may require the construction of two-way vehicular bridges of approved construction on important streets. Where detours are built, they shall be graded and maintained to the satisfaction of the District. Soft shoulders shall be plainly marked to warn motorists. Access shall be provided to cross cut roads and driveways as directed by the District.

Where construction has been completed or is in progress in existing streets, the streets shall be graded and maintained to the satisfaction of the District. No detours for foot traffic shall be more than one block in length and where crossing trenches, detours shall be provided with adequate footbridges with handrails. At least one half of existing streets shall be left open for traffic and emergency vehicles at all times.

WS-39 CONFINEMENT OF CONTRACTOR'S OPERATIONS

The Contractor shall confine construction activities within the property of the Developer and the limits of easements and construction permits outside of the Developer's property. All work on easements and permit areas outside the Developer's property shall be performed in strict compliance with the provisions of the easement or permit, with which provisions the Contractor shall be familiar. Any damage to property or persons from any encroachment beyond these limits shall be the responsibility of the Developer. Equipment and materials storage shall be confined to the Developer's property. Pipe strung on public right-of-way shall be placed a safe distance from any traveled road in such manner as to avoid accidental rolling onto the road. No driveways shall be blocked. Lighted barricades in an adequate number and locations, pursuant to state, county and local regulations, shall be provided.

WS-40 PROTECTION OF WORK AND PROPERTY

The Developer shall exercise due care to protect property and the work addressed by this agreement. The Developer shall be solely responsible for any loss or damage to property or the work herein occurring prior to the completion of and final acceptance of the work by the District.

WS-41 OTHER WORK

The District has the right to let other contracts for other work that may affect the work hereunder. Other persons performing such other work shall be afforded reasonable opportunity for introduction and storage of their materials and execution of their work. The work hereunder and such other work shall be properly coordinated and connected. If any of the work hereunder depends on the proper execution of the work of other persons, the Developer shall inspect and promptly notify the District in writing of any defects in such other work which render it unsuitable for the execution of the work hereunder. The Developer's failure to inspect and notify the District shall constitute acceptance of the other work as suitable.

The District is not obligated to provide service to the Developer's property if the other work has not been completed and accepted by the District and is necessary to provide service to the Developer's property.

Where the Developer and others are working in the same area, the District will attempt to coordinate such work for its harmonious and timely completion.

WS-42 PAVEMENT REMOVAL

Removal of existing paving in public roads shall be done in accordance with the governing agency's requirements and in private property shall be precut to one foot wider than the trench shoulder line and to a neat vertical edge.

WS-43 CLEANUP

The construction site shall be kept clean during the progress of the work. Before the work shall be considered complete, the Developer shall clean out ditches that may have been filled during the work, replace damaged surfacing, remove surplus materials and trash and dispose of brush, repair all damages, and otherwise leave the job in a neat, orderly and workmanlike condition. Dust control shall be provided during the progress of the work and during cleanup. The Contractor shall keep existing roads and streets adjacent to or within the limits of the project open to and maintained in a good and safe condition for traffic at all times. The Contractor shall remove, on a daily basis, any deposits or debris that may have accumulated on the roadway surface as a result of construction operations. Removal shall be performed on a more frequent basis should the District determine that such removal is necessary. Any damage resulting from the Contractor's operation shall be repaired by the Contractor at no expense to the Owner or District.

WS-44 FINAL INSPECTION AND ACCEPTANCE

All material and completed work are subject to final inspection by the District, which shall have the right to subject any portion thereof to such tests as in the opinion of the District shall be necessary to determine whether or not the work complies with the Plans and Specifications.

WS-45 DEFECTIVE WORK AND CORRECTIVE ACTION

During construction, work that is found by the District not to comply with the Plans and Specifications shall be remedied so as to comply therewith. Subsequent to completion and within one year after the work has received final approval and acceptance by the District, the Developer shall correct or replace any defective work or material discovered by the District. Such correction or replacement **shall commence within seven days** from the time of receipt of notice from the District and shall be completed promptly. Failure to commence such correction or replacement within seven days will result in the District notifying the Developer’s bonding company of the Developer’s failure to complete the required construction and giving the bonding company 30 days to complete the required correction or replacement. If not so commenced within the above-stated time period, or in an emergency as determined by the District at its sole discretion, when damage may result from delay, such correction or replacement may be made by the District, or by a contractor hired by the District, at the expense of the Developer. The Developer shall reimburse the District, upon demand, for any expense resulting from defects which appear within one year after acceptance of the Developer's work, including actual damages, cost of materials and labor expended by the District in making emergency

repairs, cost of engineering, inspections and supervision by the District or the Engineers, legal expense, and attorney's fees and costs reasonably incurred by the District as a result thereof.

WS-46 RESTORATION OF IMPROVEMENTS

Culverts, driveways, roadways, pipelines, monuments or other existing improvements which are removed or disturbed in the course of the work shall be restored to their original condition at the expense of the Developer. In cutting through established lawns, the sod shall be removed before trenching and replaced after backfilling to the satisfaction of the property owner. A signed release from the affected property owners will be required. As a minimum requirement, all restoration shall be made to the condition of the area prior to construction.

In areas where restoration of existing improvements will be necessary and to provide records of existing improvements, the Developer shall provide a video and/or photographic record before and after construction as required and acceptable to the District.

WS-47 "AS-BUILT" DRAWINGS

The Developer/Contractor shall maintain, on the jobsite, project field plans marked to indicate District approved plan revisions made in the field and other details of construction. The marked-up project field plans shall be made available to the District upon completion of the construction. The Developer shall be provided with a copy of the field plans and shall be responsible for providing the District with "As-Built" record drawings on a mylar format, clearly marked as "As-Built", as defined in the District ***Technical Specifications***, current edition.

The Developer shall furnish any additional information required by the District for the preparation of "As-Built" record drawings, such as, but not limited to; surveyed location of bends installed in the water main, survey of sewer inverts, and field-survey of all water and sewer features visible from the surface (meter boxes, valves, fire hydrants, side sewer stakes, manholes, cleanouts, etc.).

WS-48 MAINTENANCE GUARANTEE

Upon completion of the work and approval of the District, the Developer shall, as a condition of acceptance by the District, supply to the District a Maintenance Bond or Cash Maintenance Agreement (forms are attached), to guarantee all materials and workmanship for a period of two years after final acceptance of work. The Maintenance Guarantee shall be in the amount of twenty (20) percent of the construction cost, including tax, for the water and/or sewer improvements. The minimum Maintenance Guarantee shall be seven thousand five hundred dollars ($7,500.00, or the actual cost of construction if the actual cost is less than seven thousand five hundred dollars (7,500.00). A copy of the contractor's bid, and/or payment requests, as required by the District, shall be provided to the District upon completion of the work, as backup for the Maintenance Guarantee amount.

WS-49 LIENS

Prior to acceptance of the work, the Developer shall deliver to the District a complete release of all liens that might arise out of the performance of the work or such other evidence as may be acceptable to the District that there are no liens against the work. If any lien arises or remains unsatisfied after acceptance of the work, the Developer shall reimburse the District for any costs incurred on account thereof.

WS-50 EASEMENTS

All easements required shall be obtained by the Developer without cost to the District and shall provide for permanent easements and construction easements as shown on the Plans. The Developer shall provide the District with supporting data to verify the location of all easements. All easements shall be a minimum of 15 feet in width. The Developer shall provide the District the Easement(s) through a form or process acceptable to the District. This shall be on one of the District's standard forms, and may also be shown on documents recorded with as part of King County's, the City of Sammamish's or the City of Issaquah's requirements for final acceptance of the Development. On the District's standard forms the legal description shall be clearly written in a manner that the easement can be plotted from the description. In the event that legal services are required incident to easements beyond review of the form thereof, the costs of such services shall be paid by the Developer in amount as billed to the District before acceptance of the proposed extension.

Any required easements not located on the property for which this Developer Extension Agreement is being completed shall be obtained, in the name of the District, by Developer, at Developer's expense, using a standard District form. The original easement or a copy of such recorded easement shall be delivered to the District prior to commencement of construction.

All required easements located on the property for which this Developer Extension Agreement is being completed shall be provided by the Developer prior to Final Acceptance of the water and/or sewer improvements covered by this Agreement. Where water and sewer facilities are not located in the right-of-way or proposed right-of-way, such facilities shall be located in separate utility tracts and easements encompassing the tracts will be granted to the District. Prior to acceptance of said extension the; 1) original easement on a standard District form and 2) a copy of the documents to be recorded as part of King County's, the City of Sammamish's or City of Issaquah's requirements for final acceptance of the Development showing the easement location and containing the same easement restrictions as on the standard District form, shall be delivered to the District.

The Developer shall provide all necessary easements at Developer's sole cost regardless of changes in the Contract Plans and, if required, a title insurance policy in a sum not less than $10,000 per 500 feet of easement free and clear of encumbrances. The District may require the Developer to provide a survey of the as-built improvement to verify the location in the easement.

WS-51 BILL OF SALE

Upon completion of the work and approval of the District, the Developer shall, as a condition of acceptance by the District, convey the work to the District by Bill of Sale, a form of which is attached.

WS-52 CROSS CONNECTION CERTIFICATION

Pursuant to Washington State Regulations, WAC 248-54-285, and District Resolution No. 3340, all backflow prevention devices installed must be certified and tested by a Certified Washington State Cross Connection Specialist or Backflow Tester. This includes all such devices in facilities served by District water service provided by this Agreement.

WS-53 REIMBURSEMENT APPLICATION

Pursuant to District Resolution No. 3475, or as such Resolution is updated or modified by the District Board of Commissioners, when the Developer is eligible for reimbursement for water and/or sewer facilities to be constructed as part of the Developer Extension Agreement pursuant to Chapter 57.22 RCW, the Developer shall execute an Application for or Waiver of Reimbursement Agreement for Water/Sewer Facilities, at the time of the Predesign Meeting indicating whether the Developer chooses to exercise the right to apply for or receive reimbursement. If the Developer chooses to exercise the right for reimbursement, the Developer shall comply with the requirements for executing a reimbursement agreement with the District in the form as attached herein, or as more recently revised by the District.

WS-54 RATES AND CHARGES

The Property described in this Agreement shall be subject to all rates and charges established by the District.

WS-55 DEVELOPER EXTENSION AGREEMENT TERMINATION

A. Initiated by District

Should the Developer fail to comply with, perform and/or meet any of the conditions associated with the Agreement or conditions associated with Certificate(s) of Water and/or Sewer Availability issued by the District in conjunction with the Agreement, the District may, in its sole discretion, terminate the Developer Extension Agreement prior to its completion. In the event of such termination the District shall reimburse connection fees and charges paid by the Developer pursuant to this Developer Extension Agreement, up to a maximum of $250 per Equivalent Residential Unit for water and up to $250 per Equivalent Residential Unit for sewer, to the extent that such fees and charges have not been used, committed to or the collection of such relied upon for the planning, facilities construction, etc. by the District.

B. Initiated by Developer

Should the Developer request that the Developer Extension Agreement be terminated before its completion, the District will consider and may approve such request on the condition that 1) all District fees such as Engineering, administrative and legal relating to the Agreement be

paid in full, and 2) as otherwise conditioned by the District such as the completion of a portion of the extension improvements.

The District shall reimburse connection fees and charges paid by the Developer pursuant to this Developer Extension Agreement, up to a maximum of $250 per Equivalent Residential Unit for water and up to $250 per Equivalent Residential Unit for sewer, to the extent that such fees and charges have not been used, committed to or the collection of such relied upon for the planning, facilities construction, etc. by the District.

WS-56 INCORPORATION OF CERTIFICATE(S) OF AVAILABILITY

If a Certificate of Water and/or Sewer Availability ("Certificate") is issued by the District for the Project that relates to this Developer Extension Agreement, the terms and conditions for the Certificate(s) are hereby incorporated in the Developer Extension Agreement by this reference as if set forth herein in full.

END OF SECTION

SAMMAMISH PLATEAU WATER AND SEWER DISTRICT
DEVELOPER EXTENSION AGREEMENT
PROJECT INFORMATION

WATER _____ and/or **SEWER** _____

Name of Development_____

APPLICANT	**OWNER** *Same as Applicant? Yes ☐ / No ☐* (Optional if Owner same as Applicant)
Name:	Name:
Address:	Address:
Telephone:	Telephone:
Fax:	Fax:
E-Mail:	E-Mail:
Designate Applicant Status: Corporation ☐, Partnership ☐, LLC ☐, Joint Venture ☐, Sole Proprietorship ☐ Other ☐ _____	**Designate Owner Status:** Corporation ☐, Partnership ☐, LLC ☐, Joint Venture ☐, Sole Proprietorship ☐ Other ☐ _____
APPLICANT'S AGENT	**APPLICANT'S ENGINEER**
Name:	Name:
Company:	Company:
Address:	Address:
Telephone:	Telephone:
Fax:	Fax:
E-Mail:	E-Mail:

PRIMARY CONTACT: Applicant ☐ Owner ☐ Agent ☐ Engineer ☐

PARTY TO RECEIVE BILLS Applicant ☐ Owner ☐ Agent ☐ Engineer ☐

Refer to the General Provisions, Section WS-1, "Definitions", for an explanation of each of the parties and their project roles listed above. Complete this page indicating all owners of the real property who must sign this agreement and are responsible for its performance. Also identify the Owner's Agent, if any. Project Agent and Project Engineer shall also be indicated.

REAL PROPERTY INFORMATION

Tax Lot Number(s): _____

Attach a legal description Property Size: _____ Property Zoning: _____

Location Description:

APPLICATION AND AGREEMENT TO CONSTRUCT
EXTENSION(S) TO WATER AND/OR SEWER SYSTEM(S)

The undersigned, as the Developer herein, hereby makes application to the Commissioners of the Sammamish Plateau Water and Sewer District, as the District herein, for permission to construct and connect a private extension to the District's existing water and/or sewer system(s) as herein provided. If this application is accepted, the undersigned, in consideration of the mutual promises and covenants herein contained, agrees to the terms and conditions of this Developer Extension Agreement and as follows:

1. <u>Location of Water and/or Sewer System Extension(s).</u>

The proposed water and/or sewer system extension(s) (the "extension(s)") will be installed in streets and other approved rights-of-way, tracts and/or easements and shall be for the use and benefit of the property hereinafter described, which property is owned by the Developer and/or other owners for whom the Developer is acting as agent. Any such owners have joined in this application and are designated on the signature page hereof as "additional owners". The legal description of the property is:

See Attached Real Property Legal Description

2. <u>Warranty of Authority.</u>

The Developer and any additional owners warrant that they are the owners of all the property described in this Agreement. Developer shall also, upon request, provide a title report to the District establishing that the parties executing this Agreement are the owners of all the real property described herein.

3. <u>No Assignment Without District Approval.</u>

The Developer's rights and responsibilities arising out of this Agreement are not assignable unless District consent is obtained, as conditioned by the District, prior to any proposed assignment. Written documents as required by the District of any District approved assignment shall be filed with the District by the Developer herein at the time of any assignment.

4. <u>Description of Extension(s).</u>

The proposed extension(s) will consist of water pipe and appurtenances and/or sewer pipe and appurtenances and shall be installed in accordance with this Agreement and with such Plans and Specifications as Project Engineer may prepare in conformity with District specifications and as approved by the District.

5. Fees to be paid by the Developer.

(A) Preliminary Fees

(1) Application Fee

The Application fee shall be as set by District Resolution. The resolution establishing the Application fee for the Developer Extension Agreement is available at the District Office. All Application fees for the Developer Extension Agreement shall be paid at the time the Application is submitted to the District, and any application for a Developer Extension Agreement will not be received, accepted, or processed by the District until the Application fee is paid in full to the District. The Application fee is for District staff costs associated with providing preliminary design information, preparing the Agreement, and preparing a resolution of initial acceptance by the District's Board of Commissioners. The Application fee is non-refundable.

(2) General Facility Charges

The Developer shall pay General Facility Charges, as determined by the District as a condition of final acceptance of this Developer Extension Agreement and the extension improvements by the District. The General Facility Charge shall be set by District Resolution. If the General Facility Charge is revised by District Resolution after this Developer Extension Agreement has been entered into and before the General Facility Charges have been paid by the Developer, the charges in effect at the time that the Developer pays the General Facility Charges shall apply. The resolution establishing the General Facility Charges is available at the District Office.

At the time of, and as a condition of the District entering into this Developer Extension Agreement, a partial payment on the General Facility Charges owing for the Project shall be paid by the Developer. This partial payment of the General Facility Charges is termed the "Preliminary General Facility Charges". For Single Family Residential Developments this shall be at a rate of $500 per lot for Water General Facility Charges and/or $500 per lot for Sewer General Facility Charges. For Non-Single Family Residential Developments, including commercial developments, this shall be at a rate of $500 per Equivalent Residential Unit (ERU) for Water General Facility Charges and/or $500 per ERU for Sewer General Facility Charges, the number of ERUs to be determined by the District.

The portion of the General Facility Charges not paid upon entering into the Developer Extension Agreement, termed the "Remaining General Facility Charges", shall be paid to the District by the Developer at any point before the District's General Manager approves with his/her signature the design for construction of the water and/or sewer improvements. The District will not charge interest on Remaining General Facility Charges owing. The District rate in effect at the time that the Developer pays the Remaining General Facility Charges will apply. If the project does not include construction of any water and/or sewer facilities, the Developer shall pay to the District the Remaining General Facility Charges before installation of water meters and/or side

sewers and before the District's Final Acceptance of the Developer Extension Agreement.

Once the Remaining General Facility Charges are paid for a specific number of ERUs, the General Facility Charges for those ERUs is established at that rate and are not subject to further adjustments. For changes in the number of ERUs associated with the Developer Extension Agreement, see Section 5. (D)(5), General Facility Charge Adjustments, of this Agreement.

(B) <u>Development Services Deposit</u>

The District's administration and execution of the Developer Extension Agreement (Development Services) includes, but is not limited to, the following District services:

- Preparation of Certificates of Water and/or Sewer Availability
- Analysis, review, and approval of the design of water and/or sewer facilities prepared by the Developer's Engineer, including checking for conformity with the District's Comprehensive Plans
- Coordination with the land use agency for the proposed development and review of submittals from the land use agency
- Review and approval of easements if applicable
- Assistance in securing right-of-way permits if applicable
- Review and approval of preliminary and final plat documents
- Environmental documentation review and processing if applicable
- Legal services and/or outside consultant costs if applicable
- Review and approval of reimbursement agreements
- Review and approval of materials submittals
- Other agency permitting fees and inspection costs administered through the District
- Construction inspection and testing services
- Review and approval of final project documentation including as-built drawings, input of as-built drawings into the District's GIS system, input of facility data into the District's asset management system, and document recording

The District does not provide the following services: design services, property surveys; surveying; or staking of mains, facilities or appurtenance.

(1) <u>Development Services Deposit</u>

The Developer shall pay a Development Services Deposit ("DS Deposit") listed on the District's Development Services Fee Rate Schedule at the time of, and as a condition of, entering into this Developer Extension Agreement. The District will hold this deposit as a retainer for District expenses until the completion of the maintenance period following final acceptance of the Developer Extension Agreement, at which time the deposit will be refunded. The resolution establishing the DS Deposit is available at the District Office.

(2) Payment for Development Services

The Developer is responsible for paying, on a time-and-materials basis, for all of the District's actual labor costs and expenses as they are incurred, including overhead, associated with the District's administration and execution of the Developer Extension Agreement.

Beginning immediately after Initial Acceptance of the Developer Extension Agreement by the District's Board of Commissioners and continuing to the end of the Maintenance Period following Final Acceptance of the Developer Extension Agreement, the District will provide the Developer with periodic invoices showing the District costs expended to date. All invoices are due within thirty (30) days of the invoice date. **Failure to pay the invoice within thirty (30) days of the date of the invoice will result in suspension of all District development services activities associated with the Developer Extension Agreement, including construction activities related to the water and sewer facilities or final acceptance of the project, until such time as the invoice is paid in full. If the invoice is not paid within ninety (90) days of the date of the invoice, the amount owing will be deducted from the DS Deposit. District development services associated with the Developer Extension Agreement will not resume until the Developer restores the DS Deposit to its original amount and pays any District invoices owing.**

(C) Flushing/Jetting Water

Flushing water is used during normal construction procedures to obtain pressure tests and to flush the water mains for purity testing, and to jet the sewer lines for normal cleaning and prior to TV inspections. The District will invoice the Developer for flushing water actually used through rented or District hydrant meters, or through the water obtained through the hydrant honor system.

Flushing/jetting water fees do not cover water used in or around buildings during the construction period for plumbing tests, irrigation or other uses. Applications for use of hydrant meters may be obtained at the District to obtain water for these uses. **Developer and/or Developer's Contractor shall be fined for tampering with the District's water system if valves, including fire hydrant valves, are operated without the District's prior approval and without the District being present.**

(D) Final Acceptance Fees

Developers shall pay the Final Acceptance Fees prior to the District's final acceptance of the water and/or sewer system improvements and before the Developer may receive a letter (Health Letter) from the District stating that the water and/or sewer system improvements have been or will be finished in accordance with the District approved Plans and Specifications. If a Health Letter is not required for a project, or fees are identified after the Health Letter has been issued, payment of fees will be required prior to District accepting water meter or side sewer applications for property included in the Developer's project.

(1) Meter and Side Sewer Charges

a) Meter Charges:

Developers of Single Family Residential Projects shall pay applicable meter charges for irrigation meters. Domestic meter drop fees (for Single Family Residential Projects) shall be paid by the Builder/Owner of each individual lot at the time of meter application. If the Developer chooses, the Developer may pay the meter drop fees for the domestic water meters.

For Non-Single Family Residential Projects, including commercial developments, Developer shall pay the applicable meter charges for all Domestic and Irrigation water meters.

The meter drop fees are set by District Resolution, a copy of which is available at the District Offices. If the meter drop fees are revised by District Resolution after this Developer Extension Agreement has been entered into and before the water and/or sewer system improvements have been finally accepted for ownership by the District, the fees in effect at final acceptance shall apply.

b) Side Sewer Inspection Charges:

Domestic side sewer inspection fees, (for Single Family Residential Projects), shall be paid by the Builder/Owner of each individual lot at the time of side sewer application. If the Developer chooses, the Developer may pay the side sewer inspection fees for the domestic side sewers.

For Non-Single Family Residential Projects, including commercial developments, Developer shall pay the applicable side sewer inspection charges for all side sewer connections.

The side sewer inspection fees are set by District Resolution, a copy of which is available at the District Offices. If the side sewer inspection fees are revised by District Resolution after this Developer Extension Agreement has been entered into and before the water and/or sewer system improvements have been finally accepted for ownership by the District, the fees in effect at final acceptance shall apply.

(2) Regional Capital Facility Charges

Developers of Single Family Residential Projects shall pay applicable Regional Capital Facility Charges for irrigation meters. Regional Capital Facility Charges for domestic meters, (for Single Family Residential Projects), shall be paid by the Builder/Owner of each individual lot at the time of meter application.

For Non-Single Family Residential Projects, including commercial developments, Developer shall pay the applicable Regional Capital Facility Charges for all Domestic and Irrigation water meters at the time of meter application.

The Regional Capital Facility Charges are set by District Resolution, a copy of which is available at the District Offices. If the Regional Capital Facility Charges are revised by District Resolution after this Developer Extension Agreement has been entered into and before the water and/or sewer system improvements have been finally accepted for ownership by the District, the fees in effect at final acceptance shall apply.

(3) Local Facility Charge

The Developer shall pay Local Facility Charge fees as determined by the District. The Local Facility Charge fees are required to cover the Developer's property's equitable share of the cost of water mains and/or sewer mains that have already been installed or will be installed in the future, adjacent to their property, if that property has not previously paid its equitable share of such improvements. Developer's property includes the entire parcel, including but not limited to sensitive areas, tracts and areas that may be set aside as non-buildable or other open space or reserve tracts, as part of the Development.

The Local Facility Charge fees are set by District Resolutions, copies of which are available at the District Office. If the Local Facility Charge fees are revised by District Resolution after this Developer Extension Agreement has been entered into and before the water and/or sewer system improvements have been finally accepted for ownership by the District, the fees in effect at final acceptance shall apply.

(4) Reimbursement Fees (Owing to Others)

The Developer shall pay all reimbursement charges owing for the Property. Reimbursement charges shall be owing for:

a) Any existing reimbursement agreement with the District applicable to the Developer's extension/real property; or

b) Any reimbursement agreement in force and effect applicable to the Developer's extension/real property at the time of the District's final acceptance of the Developer's extension.

(5) General Facility Charge Adjustments

If the number of ERUs associated with the Developer Extension Agreement changes during the course of the project, the General Facility Charges will be re-evaluated prior to the District's Final Acceptance of the Developer Extension Agreement. If the number of ERUs is reduced, District will refund the General Facility Charges for the unused ERUs at the rate paid by the Developer. If the number of ERUs is increased, the Developer owes General Facility Charges for the additional ERUs at the rate in effect on the date that the Developer pays for the additional ERUs. The General Facility Charges are set by District Resolution, copies of which are available at the District Office.

Any refund will be made by the District by processing a voucher with King County, payable to the Developer, through the District's normal accounts payable process. The accounts payable process can take up to 60 days. When the check from King County for the excess General Facility Charge payment reimbursement is received by the District, it will be mailed to the Developer at the address listed on the Project Information sheet included as part of this Developers Extension Agreement, unless otherwise directed by the Developer in writing.

(6) Supplemental Developer Agreement Fees

The District will provide the Developer with periodic invoices showing the District costs expended to date associated with the following supplemental services.

a) Reimbursement Agreements

If the Developer chooses to enter into a Reimbursement Agreement with the District for facilities Developer has installed which benefit other properties adjacent or near to the installed facility, Developer shall pay: all District expenses, on a time-and-materials basis, associated with the Reimbursement Agreement; filing fees for recording the Reimbursement Agreement with King County; and expenses for legal services in excess of those normally used in preparing the District's standard Reimbursement Agreement, including but not limited to changes to the District's standard Reimbursement Agreement requested by the Developer.

The Developer is also responsible for providing the District with, or paying fees and charges related to obtaining, legal descriptions for all Properties identified in the Reimbursement Agreement.

b) Satellite Water Service Agreements

If it is necessary or desirable for the Developer's Project to be developed with a Satellite Water System, a Satellite Water Service Agreement may be entered into between the Developer and the District.

Developer shall pay: all District fees identified in the Satellite Service Agreement; filing fees for recording the Satellite Service Agreement with King County; and expenses for legal services in excess of those normally used in preparing the District's standard Satellite Service Agreement, including but not be limited to changes to the District's standard Satellite Service Agreement requested by the Developer. In addition the Developer is responsible for all fees and charges necessary for all applicable permits and approvals by all federal, state and county agencies having jurisdiction.

c) Agreement for System Use Prior to Final Lift of Asphalt

If the Developer requests and District agrees to allow use of the water and/or sewer system prior to completion of the water and/or sewer facility improvements, where the Developer has completed ALL REQUIREMENTS for Final Acceptance of the project EXCEPT placement of the final lift of asphalt, an Agreement for System Use Prior to Final Lift of Asphalt may be entered into between the Developer and the District.

Developer shall pay all District fees identified in the Agreement for System

Use Prior to Final Lift of Asphalt, with such fees being set by District Resolution.

d) Future Sewer Connection Agreement

The King County Comprehensive Plan requires Urban Designated property be developed with sewer service. In areas where sewer service is not currently available and will not be extended as part of the Developer Extension Agreement a Future Sewer Connection Agreement may be required by King County, the City of Sammamish or the City of Issaquah.

Developer shall pay all District fees associated with the execution and recording of the Future Sewer Connection Agreement.

e) Other Agreements

If any other Agreements between the Developer and the District are found to be necessary during the course of the Developer Extension Agreement, payment of additional fees or charges may be required. The Developer shall pay for all items such as, but not limited to, the preparation or review of any Agreements by the District's attorney and document recording fees.

WATER FEE SUMMARY SHEET
first of three sheets

_____
Development Name

PRELIMINARY/CERTIFICATE FEES

(1) General Facility Charges

a) **Partial Payment @ $500/ERU** _____
No. Lots _____, No. ERUs _____ (See Page A-15a for ERUs)
Meter Sizes: 3/4"_____, 1"_____, 1-1/2"_____, 2"_____, Other_____

1.5% Excise Tax on GFC = **$7.50/ERU** _____

b) **Development Services Deposit** (pay **EITHER** with Water **OR** Sewer phase) _____
Single Family Short Plat (1-9 Lots) = $5,000; All Other Projects = $10,000

Minimum Payment Necessary to Enter into Agreement

Total _____
Date Pd._____
Receipt #_____

Date of District Approval of Agreement _____

c) **Remaining General Facility Charges**

The GFC in effect at the time of payment of Remaining GFCs shall be charged. The figures given here are those in effect at the time of Agreement preparation, and are subject to change at any time without prior public notice

Meter Size	3/4"	1"	1-1/2"	2"
GFCs	$5,165.00	$12,912.00	$25,823.00	$41,316.00

No. Lots _____, No. ERUs _____ (See Calculation Pages for ERUs)
Meter Sizes: 3/4"_____, 1"_____, 1-1/2"_____, 2"_____, Other_____

GFC Rate in effect at time Remaining GFC Payment
= $_____/ERU x _____ ERUs _____

less Partial Payment in (1)a) (_____)

Remaining GFC Subtotal _____

1.5% Excise Tax on Remaining GFC Subtotal _____

Total _____
Date Pd._____
Receipt #_____

WATER FEE SUMMARY SHEET
second of three sheets

_____
Development Name

FINAL ACCEPTANCE FEES

(1) Meter Charges (Meter drop prices shown below)

Domestic Meters _____
(Optional for Single Family Residential)
_____ - 3/4" @ $425.00; _____ - 1" @ $500.00, _____ - 1-1/2" @ $825.00
_____ - 2" @ $1,050.00, _____ - 3" @ T&M; _____ - 4" @ T&M

Irrigation Meters _____
_____ - 3/4" @ $425.00; _____ - 1" @ $500.00, _____ - 1-1/2" @ $825.00
_____ - 2" @ $1,050.00, _____ - 3" @ T&M; _____ - 4" @ T&M
Note: Prices quoted are for meter drops, meter installation fees are not quoted.

---

(2) Regional Capital Facility Charges

All Meters (Optional for Single Family Residential) _____
_____ - 3/4" @ $6,005.00; _____ - 1" @ $15,012.50, _____ - 1-1/2" @ $30,025.00
_____ - 2" @ $48,040.00, _____ - 3" @ $96,080.00; _____ - 4" @ $150,125.00

Excise Tax @ 1.5% _____
_____ - 3/4" @ $90.08; _____ - 1" @ $225.19, _____ - 1-1/2" @ $450.38
_____ - 2" @ $720.00, _____ - 3" @ $1,441.20; _____ - 4" @ $2,251.88

---

(3) Local Facility Charge

_____ lineal feet at $_____/lineal foot _____
Streets or areas of frontage:
_____
_____

LFC Excise Tax @ **1.5%** _____

The LFC rate in effect at the time of Final Acceptance shall be charged. The general rate given here, $178.00 per lineal foot, was in effect at the time of Agreement preparation, and is subject to change at any time without prior public notice

---

(4) Reimbursement Fees (Owing to Others) _____
Description of Reimbursement Basis and Factors:
_____
_____

---

(5) General Facility Charge Adjustments

See Calculation Sheets for Explanation

TOTAL + or - _____ _____

GFC Excise Tax @ **1.5%** _____

---

(6) Other Charges

_____ _____

WATER FEE SUMMARY SHEET
third of three sheets

_____
Development Name

FINAL ACCEPTANCE FEES – SUMMARY AND TOTAL

(1) Meter Charges

Domestic Meters _____

Irrigation Meters _____

(2) Regional Capital Facility Charges _____

(3) Local Facility Charges _____

(4) Reimbursement Fees _____

(5) General Facility Charge Adjustments _____

(6) Other Charges _____

(7) Excise Tax @ 1.5%:

RCFC _____ LFC _____ GFC _____ _____

TOTAL _____
Date Pd. _____
Receipt #_____

FINAL LIFT PHASING, IF APPLICABLE

Final Lift Phasing Deposit _____

Date Pd. _____
Receipt #_____

Final Lift Phasing Deposit Refund _____

Payment to Developer Voucher #_____
if TOTAL is negative (owe Developer) _____

PROJECT CLOSEOUT

(1) 23-month Inspection and Project Final Costs _____

(2) Development Services Deposit Refund _____

(3) Other _____ _____

TOTAL _____
Date Pd. _____
Receipt #_____

Payment to Developer Voucher #_____
if TOTAL is negative (owe Developer) _____

SEWER FEE SUMMARY SHEET
first of three sheets

_____
Development Name

PRELIMINARY/CERTIFICATE FEES

(1) General Facility Charges

a) **Partial Payment @ $500/ERU** _____
No. Lots _____, No. ERUs _____ (See Page A-15-a for ERUs)
Meter Sizes: 3/4"_____, 1"_____, 1-1/2"_____, 2"_____, Other_____

1.5% Excise Tax on GFC = **$7.50/ERU** _____

b) **Development Services Deposit** (pay **EITHER** with Water **OR** Sewer phase) _____
Single Family Short Plat (1-9 Lots) = $5,000; All Other Projects = $10,000

Minimum Payment Necessary to Enter into Agreement

Total _____
Date Pd._____
Receipt #_____

Date of District Approval of Agreement _____

c) **Remaining General Facility Charges**

The GFC in effect at the time of payment of Remaining GFCs shall be charged. The figures given here are those in effect at the time of Agreement preparation, and are subject to change at any time without prior public notice

Meter Size	3/4"	1"	1-1/2"	2"
GFCs	$4,007.00	$10,018.00	$20,035.00	$32,056.00

No. Lots _____, No. ERUs _____ (See Calculation Pages for ERUs)
Meter Sizes: 3/4"_____, 1"_____, 1-1/2"_____, 2"_____, Other_____

GFC Rate in effect at time Remaining GFC Payment
= $_____/ERU x _____ ERUs _____

Less Partial Payment in (1)a) (_____)

Remaining GFC Subtotal _____

1.5% Excise Tax on Remaining GFC Subtotal _____

Total _____
Date Pd._____
Receipt #_____

SEWER FEE SUMMARY SHEET
second of three sheets

_____
Development Name

FINAL ACCEPTANCE FEES

(1) Side Sewer Inspection Charges

Single Family Residential (Optional)
Number of Lots _____ x $200.00 _____

Non-Single Family Residential
Number of Side Sewers _____ x $300.00

Oil/Water Separators or Grease Interceptors
Number of Side Sewers _____ x $1,100.00

---

(2) Local Facility Charge

_____ lineal feet at $_____/lineal foot _____
Streets or areas of frontage:
_____
_____

Excise Tax @ **$1.5 %** _____

The LFC rate in effect at the time of Final Acceptance shall be charged. The general rate given here, $228 per lineal foot, was in effect at the time of Agreement preparation, and is subject to change at any time without prior public notice

---

(3) Reimbursement Fees (Owing to Others) _____
Description of Reimbursement Basis and Factors:
_____
_____

---

(4) General Facility Charge Adjustments

See Calculation Sheets for Explanation

TOTAL + or - _____ _____

GFC Excise Tax @ **1.5%** _____

---

(5) Other Charges

_____ _____

SEWER FEE SUMMARY SHEET
third of three sheets

_____
Development Name

FINAL ACCEPTANCE FEES – SUMMARY AND TOTAL

(1) Side Sewer Inspection Charges

Single Family Residential (Optional) _____

Non-Single Family Residential _____

(2) Local Facility Charge _____ _____

(3) Reimbursement Fees (Owing to Others) _____

(4) General Facility Charge Adjustments _____ _____

(5) Other Charges _____

(6) Excise Tax @ 1.5%:

LFC _____ GFC _____ _____

TOTAL _____
Date Pd. _____
Receipt #_____

FINAL LIFT PHASING, IF APPLICABLE

Final Lift Phasing Deposit _____

Date Pd. _____
Receipt #_____

Final Lift Phasing Deposit Refund _____

Payment to Developer Voucher #_____
if TOTAL is negative (owe Developer) _____

PROJECT CLOSEOUT

(1) 23-month Inspection and Project Final Costs _____

(2) Development Services Deposit Refund _____

(3) Other _____ _____

TOTAL _____
Date Pd. _____
Receipt #_____

Payment to Developer Voucher #_____
if TOTAL is negative (owe Developer) _____

Calculation of Equivalent Residential Units (ERUs) Date _____
By _____

1 ERU = The water use for a Single Family Building using a 3/4" meter.

ERUs are based on meter size. The number of ERUs each meter size represents is based on American Water Works Association (AWWA) capacity ratings.

Water: ERUs based on meter size.

Sewer: ERUs based on meter size.

Category Used for basis of Calculation:_____

Single Family Residential: No. Lots _____;
Meter Sizes: 3/4"_____, 1"_____, 1-1/2"_____, 2"_____, Other_____

Non Single Family Residential: Meter Sizes: 3/4"_____, 1"_____, 1-1/2"_____, 2"_____, Other_____

If the meter size is not known, an estimate based on similar facilities installed in the District should be used.

Meter Size	ERUs
3/4"	1
1"	2.5
1 1/2"	5
2"	8
3"	16
4"	25
6"	50
8"	80
10"	115

Other Criteria _____

CALCULATIONS FOR ERU'S AT TIME OF ENTERING INTO AGREEMENT:

 # Water ERUs _____

 # Sewer ERUs _____

By ___ Date _____

CALCULATIONS FOR ERU'S IF CHANGES TO SCOPE OF DEVELOPMENT HAVE OCCURRED PRIOR TO PAYMENT OF REMAINING GFC'S:

Single Family Residential: No. Lots _____;
Meter Sizes: 3/4"_____, 1"_____, 1-1/2"_____, 2"_____, Other_____

Non-Single Family Residential: Meter Sizes: 3/4"_____, 1"_____, 1-1/2"_____, 2"_____, Other_____

If the meter size is not known, an estimate based on similar facilities installed in the District should be used.
Other Criteria _____

 # Water ERUs _____

 # Sewer ERUs _____

By ___ Date _____

CALCULATIONS FOR ERU'S IF CHANGES TO SCOPE OF DEVELOPMENT HAVE OCCURRED PRIOR TO PAYMENT OF FINAL ACCEPTANCE FEES:

Single Family Residential: No. Lots _____;
Meter Sizes: 3/4"_____, 1"_____, 1-1/2"_____, 2"_____, Other_____

Non Single Family Residential: Meter Sizes: 3/4"_____, 1"_____, 1-1/2"_____, 2"_____, Other_____

If the meter size is not known, an estimate based on similar facilities installed in the District should be used.
Other Criteria _____

 # Water ERUs _____

 # Sewer ERUs _____

By ___ Date _____

(5) General Facility Charge Adjustments - **Water**

a) Change in Project Scope _____

b) Other Reasons_____

_____

Final Project Scope

Single Family Residential: No. Lots _____;

Meter Sizes: 3/4"_____, 1"_____, 1-1/2"_____, 2"_____, Other____

Non Single Family Residential: Meter Sizes: 3/4"_____, 1"_____, 1-1/2"_____, 2"_____, Other____

ERU Calculations

ERU Adjustment:

Final ERU Calculations _____

less ERUs included at payment of Remaining GFCs see (1)c) «_____»

Change in ERUs _____

Final Water GFC Calculation

Final Water GFC Rate = $_____/ERU x _____ERUs = $_____

Adjustment to General Facility Charge + or - _____ **Copy to Page A-12**

---

(4) General Facility Charge Adjustments - **Sewer**

a) Change in Project Scope _____

b) Other Reasons_____

_____

Final Project Scope

Single Family Residential: No. Lots _____;

Meter Sizes: 3/4"_____, 1"_____, 1-1/2"_____, 2"_____, Other____

Non Single Family Residential: Meter Sizes: 3/4"_____, 1"_____, 1-1/2"_____, 2"_____, Other____

ERU Calculations

ERU Adjustment:

Final ERU Calculations _____

less ERUs included at payment of Remaining GFCs see (1)c) «_____»

Change in ERUs _____

Final Sewer GFC Calculation

Final Sewer GFC Rate = $_____/ERU x _____ERUs = $_____

Adjustment to General Facility Charge + or - _____ **Copy to Page A-15**

DEVELOPER EXTENSION AGREEMENT FEE SCHEDULE
04/07/2014

FEE/DEPOSIT	AMOUNT	EXPLANATION
Application Fee	$ 1,000.00	Required with Application for a Water and/or Sewer Developer Extension Agreement
Development Services Deposit	$ 5,000.00 $ 10,000.00	For Single-Family projects encompassing 1 to 9 lots, including short plats For all other projects Refundable at end of Maintenance Period
Flushing Water	$ Actual costs	Water used in association with a Developer Extension Agreement filling and flushing of water mains, jetting of sewers, and other construction uses shall be metered through the use of a hydrant meter (or hydrant use "honor system" if approved by the District), and the Developer will be billed for water use
Satellite Water Service Agreements	$ 250.00 $ 3,000.00	Administrative Fee Future Water System Conversion
System Use Prior to Final Lift of Asphalt Deposit (refundable)	500.00 $ 250.00 $ 50.00 $ 125.00 $ 100.00 $ 200.00 $ 100.00 $ 100.00 $ 100.00 $	Per Manhole Per Valve Box Meter Boxes & Stripes Hydrants with Blue Reflectors Per Type 1 Blow-off Per Type 2 Blow-off Air Relief Valves Valve Marker Posts Cleanouts

6. Preparation of Plans

Developer shall retain its own engineer to prepare the Plans for the extension(s) according to District Specifications.

(A) The Developer must obtain District approval of Project Engineer in accordance with Paragraph WS-6 of this Agreement.

(B) As part of the preparation of the Plans, Developer must file with the District copies of the:

1) Draft and Approved Preliminary Plat for Developer's project.

2) Road and storm sewer plans and profiles for the project.

3) A contour map of the project with contour intervals of five (5) feet or less. For projects including sewer, more detailed contour information may be required.

(C) The Developer shall submit an electronic request for a copy of As-Built drawings for surrounding District utilities, as may be available.

(D) The Developer and the Developer's Engineer shall schedule a pre-design meeting with the District to discuss the items listed below.

1) Water system - a conceptual plan illustrating the overall system grid required, the necessary sizes of pipes, gradients of water lines and such other special requirements as may be deemed necessary. The drawings shall include all water facilities required to provide service to the Real Property included in the Developer Extension Agreement, any offsite facilities required to reach the Real Property, and extension across the Real Property in all directions so as to provide for future extension of the water system beyond the Real Property.

2) Sewer system - a conceptual plan illustrating the overall collection system required, the necessary sizes of pipes, points of connection and such other special requirements as may be deemed necessary. The drawings shall include all sewer facilities required to provide service to the Real Property included in the Developer Extension Agreement, any offsite facilities required to reach the Real Property, and extension across the Real Property in all directions so as to provide for future extension of the sewer system beyond the Real Property.

(E) Following the predesign meeting, the Project Engineer shall prepare and submit to the District three (3) copies of a preliminary Design and Plans for review and approval by the District. The District shall have the right to require changes in the preliminary Design and Plans as may be deemed necessary. All Designs and Plans prepared by Project Engineer shall be prepared in accordance with: Part One - Design Standards for Water and Sewer Systems, and Part Five - Drawing Standards for Water and Sewer Systems of this Agreement's Technical Specifications. Upon approval of the preliminary Design and Plans by the District, Project Engineer shall prepare a final Plan and submit the original mylar drawing of the final Plan to the District.

(F) Upon approval of the final Plan by the District, the District Manager shall indicate his/her approval of the Plan on the original mylar drawings, and the District will furnish the Developer with the District's most current technical standards for inclusion with the District-Approved Plans.

(G) Copies of the Plans

1) The Developer will make the following copies of the District-Approved Plans as necessary for Permit submittals and for District use during construction and inspection. The District reserves the right to request additional copies as needed.
   - Adobe PDF of the District-Approved Plans, including District Standards (electronic submittal shall be on CD)
   - Three (3) Full-size sets with District Standards
   - Two (2) 11"x17" (half-size) set with District Standards

2) The original mylars will be kept by the Developer's Engineer for preparation of As-Built Record Drawings at the completion of construction.

3) The Developer shall provide all necessary copies of the District-Approved Plans to the Developer's Contractor.

7. Technical Detail and Specifications

Refer to the ***Technical Specifications*** Sections of this Agreement; Part One – Design Standards, Part Two – Material Standards, Part Three – Construction Standards, Part Four - Standard Details, and Part Five – Drawing Standards; which are attached hereto and made a part of this Agreement. In addition, the Sammamish Plateau Water and Sewer District *Side Sewer Regulations*, a separate document, are included by this reference.

8. Permits and Approvals by other Agencies

When the original mylar Plan Drawings have been approved by the District Manager, the District will apply for such right-of-way permits and approvals for the Plan as may be necessary. It is the Developer's responsibility to prepare applications for permits such as grading permits, site development permits, fire hydrant permits, and State Environmental Policy Act compliance. Should changes to the Plan be required in order to receive said permits and approvals, the Engineer who prepared the plan shall make all changes as required.

9. Performance Guarantee

The Developer shall provide a signed copy of the contractor's bid for the extension(s), (unless the Developer is undertaking the work itself), for the District's review, a minimum of five (5) days prior to the preconstruction conference. Developer shall furnish to the District, prior to the preconstruction conference a performance guarantee of a type and in a form as determined by the District, in its sole discretion, in an amount equal to either the engineer's estimated cost of the extension(s) or contractor bid price as required by the District.

The Performance Guarantee shall require completion of all work within a period of eighteen (18) months from the date of payment of the Development Services Fee to the District in accordance with the Agreement, the Plans and Specifications and other requirements of the District. The Performance Guarantee shall be released by the District upon the District's final

acceptance of the work in accordance with paragraph WS-11 "Performance Guarantee" of this agreement.

The District in its sole discretion may also require a payment bond of a type and in a form as determined by the District requiring the payment by the Developer of all persons furnishing labor and materials in connection with the work performed under the Agreement, and shall hold the District harmless from any claims therefrom. Any payment bond required by the District shall be provided to the District prior to the preconstruction conference or following commencement of work as a condition of the District granting final acceptance of the work referenced herein.

No third person or party shall have any rights under any performance or payment guarantee the District may require from the Developer and such are provided entirely for the benefit of the District and the Developer and their successors in interest.

10. <u>Subletting and Subcontracting</u>

Developer is fully responsible for the acts and omissions of subcontractors and persons employed, directly or indirectly, by subcontractors, as well as the acts and omissions of persons directly employed by the Developer.

11. <u>Preconstruction Meeting</u>

After the Plans have been approved by the District, review and approval of construction material submittals is completed by the District, and a Performance Guarantee has been supplied to the District, the Developer shall contact the District to schedule a preconstruction meeting. Construction of the water and/or sewer improvements for the Developer's project shall not begin for at least 48 hours after the preconstruction meeting. The preconstruction meeting shall be at the District's offices, located at 1510 - 228th Avenue SE, Sammamish, Washington, during normal District office hours. If deemed necessary, the meeting may be continued at the project site.

The meeting shall be attended by the Developer, Developer's Contractor and project superintendent, any sub-Contractor who will be involved in the construction of the water and/or sewer improvements, Project Engineer, if appropriate, District Inspector, other District staff personnel and government agency representatives with jurisdiction on the water and/or sewer improvements installation, if they so request to be present. The District may elect to excuse the attendance at the meeting of any of the attendees upon request.

If the Developer changes Contractors or hires additional Contractors who were not included in the preconstruction meeting for the installation of the water and/or sewer facilities, an additional meeting may be required by the District prior to the new Contractor(s) doing any work on the water and/or sewer installations.

Prior to any work being performed on the water and/or sewer improvements, a Certificate of Insurance covering each Contractor who will be working on the water and/or sewer improvements must be provided to the District. The Certificate shall list the name of the project, with the District as Certificate Holder on the certificate, and shall name the District as an insured, together with an endorsement to the Developer’s comprehensive general liability insurance naming the District as an insured as required herein.

12. Work Performed Outside of Normal District Work Hours (Overtime)

District services beyond normal District working hours are considered overtime for purposes of compensation of District services. The District will make reasonable accommodation to provide development services outside of normal District working hours.

District services provided beyond normal working hours will be at the District's overtime rate (1.5 times actual salary) plus overhead.

The request for overtime shall be made in writing by either the developer or the developer's contractor. The developer acknowledges that the contractor is acting as the developer's agent in requesting overtime, for which the District will be compensated by the developer.

District overtime services that are scheduled to begin after normal working hours (overnight or Saturday) shall be compensated at a minimum of 4 hours. Failure to perform the work ("no show") without notifying the District in writing at least 48 hours in advance will result in a 4-hour minimum charge.

13. Final Acceptance - Conditions Precedent

(A) Compliance with this Agreement

Compliance with all terms and conditions of this Agreement, the Plans and Specifications prepared hereunder and other District requirements shall be a condition precedent to the District's final acceptance of the extension(s) and acceptance of the bill(s) of sale to the extension(s) and to the District's agreement to maintain and operate the extension(s) and to provide water and/or sewer service to the real property that is described in this Agreement.

(B) Payment of Fees and Costs

No connection to the District water and/or sewer system(s) of any portion of the real property described in this Agreement shall be allowed if there are any fees or costs unpaid to the District under this Agreement or there are other fees arising under other District requirements which are unpaid.

(C) Construction Completion

1) Third Party Facilities

The District shall not be obligated to provide water and/or sewer service to the property described in this Agreement if construction by third parties of facilities to be transferred to the District has not been completed and title accepted by the District if such third-party facilities are necessary to provide water and/or sewer service to the property described in this Agreement.

2) Developer's Project Facilities

The District will accept title to the extension(s) at such time as all work which may, in any way, affect the water and/or sewer lines constituting the extension(s) has been completed, any damage to said extension(s) which may exist has been repaired, and the District has made final inspection and given the approval to the extension(s) as having been completed in

accordance with this Agreement, the Plans and Specifications and other requirements of the District.

(D) Maintenance Guarantee

Such acceptance by the District shall not relieve the Developer of the obligation to correct defects in labor and/or materials as herein provided and/or the obligations set forth in applicable paragraphs hereof. After acceptance of the extension(s) by the District and the transferring of title to such extension(s) as set forth herein, the Developer shall furnish to the District a maintenance guarantee (cash or bond) which shall continue in force from the date of final acceptance of said extension(s) for a period of two years. The period of two years does not start until all improvements are complete, including adjustments in the final lift of asphalt. The guarantee shall be in a form as contained herein and shall require the Developer and/or the bonding company to correct the defects in labor and materials which arise in said system for a period of one year from the date of final acceptance of the system. The maintenance guarantee shall be in an amount equal to twenty (20) percent of the cost of said extension(s), but not less than seven thousand five hundred dollars ($7,500.00), or the actual cost of construction if less than seven thousand five hundred dollars.

(E) As-Built Record Drawings

The Developer shall provide to the District the project field plans maintained by the Developer/Contractor, marked to indicate District-approved plan revisions made in the field and other details of construction. The Developer shall also furnish any additional information not shown on the project field plans required by the District for the preparation of As-Built record drawings, such as but not limited to, locating bends in the water main from two permanent above ground fixtures and survey of sewer inverts and the location of all above ground water and sewer facilities and/or structures.

The Developer shall be responsible for providing the District with As-Built record drawings, on a mylar format, clearly marked as "As-Built". The as-built record drawings shall also be provided in a digital format. In addition, for all as-built record drawings, electronic file(s) containing a scanned image of each sheet shall be provided. See ***Technical Specifications*** for details. Prior to their acceptance the District shall review the As-Built Record Drawings and inform the Developer of any additional information required and not shown, such as but not limited to, survey of water and/or sewer improvements not located in County or City Right-of-Way.

(F) Easements

All easements required shall be provided by the Developer prior to Final Acceptance of the water and/or sewer improvements covered by this Agreement. The Developer shall provide the District the Easement(s) on one of the District's standard forms. In addition, the easement shall be shown on documents recorded as part of King County's, the City of Sammamish's or the City of Issaquah's requirements for final acceptance of the Development.

1) Standard Forms

Copies of the District's standard easement forms are available at the District offices.

2) On Documents

The easement to be provided to the District shall be shown on Development documents recorded with King County. The easement shall be identified as a "Water Easement" or "Sanitary Sewer Easement" and shall have the same restrictions identified on the District's standard easement forms. The Developer shall provide the District with a copy of the Development documents, such as the proposed final short plat or plat, as they are to be recorded, for District's review and approval of waterline and sewer line easements, prior to recording. A copy of the recorded document shall also be provided to the District, after final recording.

(G) Cross Connection Certification

All backflow prevention devices shall be installed prior to final inspection and a Backflow Prevention Assembly Test Report for each device must be submitted to the District prior to Final Acceptance of and service to the project. The test report may be on the District's standard form, which is available at the District offices, or on a form similar to the form provided in the Forms section of this Agreement.

Prior to the lapse of the one year maintenance period and release of the Maintenance Guarantee, the Developer is required to have all backflow prevention devices retested, certified and a Backflow Prevention Assembly Test Report submitted to the District. Thereafter, on an annual basis, the Owner of the property is required to have the backflow prevention devices retested, certified and a test report submitted to the District.

14. Warranties of Developer

The Bill of Sale to be provided by the Developer to the District shall contain the following warranties with the District as beneficiary:

(A) Developer is the owner of the property, the same is free and clear of all encumbrances and Developer has good right and authority to transfer title thereto to the District and will defend the title of the District against the claims of all third parties claiming to own the same or claiming any interest therein or encumbrance thereon; and

(B) The water system and/or sewer system extension(s) is/are in proper working condition, order and repair, and is/are adequate and fit for the intended purpose of use as a water system and/or sewer system and as an integral part of the water supply and distribution system of the District and/or as an integral part of the sewer collection system of the District; and

(C) For a period of two years from the date of Final Acceptance of the extension(s) by the District, the extension(s) and all parts thereof shall remain in proper working condition, order and repair, and Developer shall repair or replace, at Developers expense, any work or material which may prove to be defective during the period of the warranty.

In addition, Developer shall obtain warranties and guaranties from its subcontractor(s) and/or supplier(s) where such Warranties or guaranties are required by the District. When corrections of defects occurring within the warranty period are made, Developer shall further warrant corrected work for two years after acceptance of the corrected work by the District.

15. Procedure for Acceptance

Acceptance of title to the extension(s) will be made by motion and resolution of the Board of Commissioners of the District. Prior to such acceptance, an executed Bill of Sale in a form approved by the District and containing the warranties required by this Agreement shall be executed by the Developer and any additional owners and delivered to the District.

16. Effect of Acceptance

Acceptance by District shall cause the extension(s) to be subject to the control, use and operation of the District and all regulations and conditions of service and service charges as the District determines to be reasonable and proper.

17. Provision of Service

The Developer will be required to provide the District with a copy of any recorded documents which indicate the final subdivisions, easements, rights-of-way or legal descriptions of the real property described in this Agreement. This shall include but not be limited to Plat Certificates, Final Short Plat maps or Record of Surveys.

Water and/or sewer service will be provided to individual users upon receipt of a completed application and payment of any fees, such as Regional Facility Connection Charges, meter drop fees and/or side sewer inspection fees, owing for such service, as required by District

policies and resolutions. If sewer service is available to the property, and there is no pre-existing alternate source of sewage disposal, connection to the sewer service may be required at the time water service is provided.

18. <u>Phased Construction</u>

The extension(s) may be constructed in phases with prior District approval and as further conditioned by the District. Acceptance may also be on a phased basis when all requirements have been met. There will be no conditional acceptance or acceptance for use and operation.

If phased construction is requested by Developer prior to design review, the Developer shall enter into a new, additional Developer Extension Agreement for each additional phase, and the scope of the original Developer Extension Agreement shall be revised to reflect the initial phase. The District reserves the right to refuse the phased construction request if necessary portions of the water and/or sewer system would be eliminated by the separation. Separate and distinct plan sets will be required for each Developer Extension Agreement. All fees and charges required for each individual Developer Extension Agreement will be assessed and paid in full.

If phased construction is requested after design review has commenced, but prior to construction, the Developer shall enter into a new the Developer Extension Agreement for each additional phase, and shall submit new plans for original Developer Extension Agreement that reflect the revised initial phase. The District reserves the right to refuse the phased construction request if necessary portions of the water and/or sewer system would be eliminated by the separation. Separate and distinct plan sets will be required for each Developer Extension Agreement. All fees and charges required for each individual Developer Extension Agreement will be assessed and paid in full, and any additional costs for re-reviewing plans previously started will be assessed.

Phased construction requests following District approval of the plans will not be allowed.

However, requests for phased acceptance of the water and sewer improvements will be considered in cases where the water and sewer improvements have been completed except for adjustment for final lift of asphalt. These requests will be considered on a case by case basis. The minimum following conditions must be in place prior to District consideration of the request.

a. Asphalt treated base (ATB) is placed.
b. Punchlist is completed except for final asphalt lift.
c. Developer provides all paperwork necessary for District acceptance of the Developer Extension Agreement.
d. Developer pays all final fees.
e. Developer executes Agreement for System Use Prior to Final Lift of Asphalt, including payment of all associated fees.

For phased acceptance prior to placement of the final lift of asphalt, the Developer shall enter into an Agreement for Water/Sewer Facilities System Use Prior to Final Asphalt Lift with the District, a copy of which is contained herein.

19. Use and Operation of System Prior to Final Acceptance

The District shall have the right to take possession of and use any completed or partially completed portions of the work although the time may not have expired for completing the entire work, and this shall not be deemed acceptance of any of the work. However, the District is not obligated to supply service to the Developer's property until all work is completed and accepted by the District.

20. Limitation of Period of Acceptance

The extension(s) shall be completed and accepted within eighteen (18) months of the date of payment of the Development Services Fee to the District. If the extension(s) is/are not completed and accepted within the eighteen (18) month period, then this Agreement and all of the Developer's rights herein shall terminate and cease. In the event the Agreement terminates, the District shall have the option, in its sole discretion, to allow the Developer an extension on the existing agreement or to require the Developer to make a new application for extension agreement to the District. If the District decides to allow the Developer an extension of the existing agreement, the existing agreement shall then be subject to any new or amended resolutions or policies which have taken affect since the initial execution of the agreement. Any such new agreement entered into between the District and the Developer pursuant to a new application shall be subject to any new or amended resolutions or policies which have taken affect since the execution of the terminated agreement.

21. Inspection/Corrections of Defects Occurring Within Maintenance Period

When defects in the extension(s) are discovered within the maintenance period, Developer shall start work to remedy any such defects within seven (7) days of notice by the District and shall complete such work within thirty (30) days of beginning remedial work. Failure to commence such correction or replacement within seven days will result in the District notifying the Developer's bonding company of the Developer's failure to complete the required construction and giving the bonding company 30 days to complete the required correction or replacement. If not so commenced within the above-stated time period, or in an emergency as determined by the District at its sole discretion, when damage may result from delay, such correction or replacement may be made by the District, or by a contractor hired by the District, at the expense of the Developer.

In emergencies, which shall be determined by the District at its sole discretion, where damages may result from delay and where loss of service may result, corrections may be made by the District upon discovery, in which case the cost thereof shall be borne by the Developer. In the event the Developer does not commence and/or accomplish corrections within the time specified, the work may be accomplished by the District, or by a contractor hired by the District, at its option, and the cost thereof shall be paid by the Developer.

Developer shall be responsible for any expenses incurred by the District resulting from defects in the Developer's work, including actual damages, costs of materials and labor expended by the District in making repairs and the cost of engineering, inspections and supervision by the District.

22. Cleaning of Sewer System Within Maintenance Period

Twenty-three months after acceptance of the extension(s) by the District, the Developer shall have the sewer system jetted completely, prior to the District's Maintenance Period inspection. The Developer shall arrange with the District to have a District representative

observe the jetting operation. All debris and jetting water shall be removed (vactored) from the sewer system and disposed of properly. The District may, at its sole discretion, allow the decant water from the vactor truck to be disposed of at specific locations within the District, but only in the presence of a District representative.

APPROVAL OF THIS APPLICATION BY THE DISTRICT CONSTITUTES A CONTRACT WITH THE DEVELOPER APPLICANT, THE TERMS OF WHICH ARE EACH PARAGRAPH OF THIS MANUAL, THE DISTRICT'S MATERIALS, CONSTRUCTION AND STANDARD DETAILS SPECIFICATIONS SHEETS, THE EXTENSION(S) DESIGN DRAWINGS APPROVED BY THE DISTRICT AND APPLICABLE DISTRICT POLICIES, RESOLUTIONS AND PROCEDURES.

DEVELOPER, _____,

a ___ corporation, ___ partnership, ___ limited liability company (LLC), ___ joint venture,

___ sole proprietorship.

NOTE: 1. If the Developer is a corporation, this Agreement must be executed by its duly authorized representative and the Developer hereby warrants same.
2. If the Developer is a partnership, at least one of the general partners must sign this Agreement and indicate his/her capacity as such.

By _____ ("Developer")

_____
(Print or type name)

Its_____
(Print or type position held)

STATE OF WASHINGTON)
) ss.
COUNTY OF KING)

I certify that I know or have satisfactory evidence that _____ signed this instrument and acknowledged it to be _____ free and voluntary act for the uses and purposes mentioned in the instrument.

Dated _____
Signature of
Notary Public_____
Title _____
My Appointment Expires _____

STATE OF WASHINGTON)
) ss.
COUNTY OF KING)

I certify that I know or have satisfactory evidence that _____ signed this instrument, on oath stated that _____ was authorized to execute the instrument and acknowledged it as the _____ of _____ to be the free and voluntary act of such party for the uses and purposes mentioned in the instrument.

Dated _____
Signature of
Notary Public_____
Title _____
My Appointment Expires _____

NOTE: If the Developer is not the owner of the Real Property which is the subject of this Application for Developer Extension Agreement, such owner(s) hereby join in this Application and agree to be bound by its terms and conditions if such is approved by the District.

OWNER(s), _____,

a ___ corporation, ___ partnership, ___ limited liability company (LLC), ___ joint venture,

___ sole proprietorship.

NOTE: 1. If the Owner is a corporation, this Agreement must be executed by its duly authorized representative and the Developer hereby warrants same.
2. If the Owner is a partnership, at least one of the general partners must sign this Agreement and indicate his/her capacity as such.

By _____ ("Owner")

_____
(Print or type name)

Its_____
(Print or type position held)

STATE OF WASHINGTON)
) ss.
COUNTY OF KING)

I certify that I know or have satisfactory evidence that _____ signed this instrument, on oath stated that _____ was authorized to execute the instrument and acknowledged it as the _____ of _____ to be the free and voluntary act of such party for the uses and purposes mentioned in the instrument.

Dated _____
Signature of
Notary Public_____
Title _____
My Appointment Expires _____

THE FOREGOING APPLICATION of _____ approved this _____ day of _____, _____.

SAMMAMISH PLATEAU WATER AND SEWER DISTRICT

By _____
District Manager

Resolution Number _____

FORMS
Table of Contents

Approval Block for Plans

Easements
- Easement for Water Lines
- Easement for Sewer Lines with Access Road

Additional District Standard Easements Are Available at www.spwsd.org
Contact District for Applicable Easement(s) for Each Project

Performance Guarantees
- Cash Performance and Pledge of Monies Agreement
- Performance Bond
- Sample Letter of Credit Form Acceptable to the District

Materials and Equipment Submittal

Certificate of Insurance including Endorsements (Sample)

Acceptance by Property Owner of Restoration Improvements

As-Built Drawing (Samples)
- Water
- Sewer

Affidavit of No Liens

Bill of Sale
- Bill of Sale - Water
- Bill of Sale - Sewer

Maintenance Guarantee
- Maintenance Bond
- Cash Maintenance and Pledge of Monies Agreement

System Use Prior to Final Lift of Asphalt

Final Cost Summary
- Water Final Cost Summary
- Sewer Final Cost Summary

Backflow Prevention Assembly Test Report

Reimbursement Agreement for Water/Sewer Facilities
- Waiver/Application Form
- Reimbursement Agreement Process
- Reimbursement Agreement

SEC 32, TWP 25N, RGE 6E

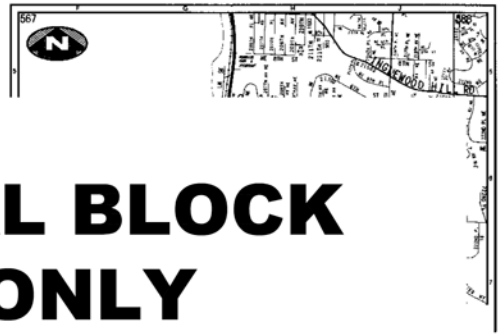

SAMPLE FORMAT FOR DISTRICT STANDARD APPROVAL BLOCK LOCATE ON COVER SHEET ONLY

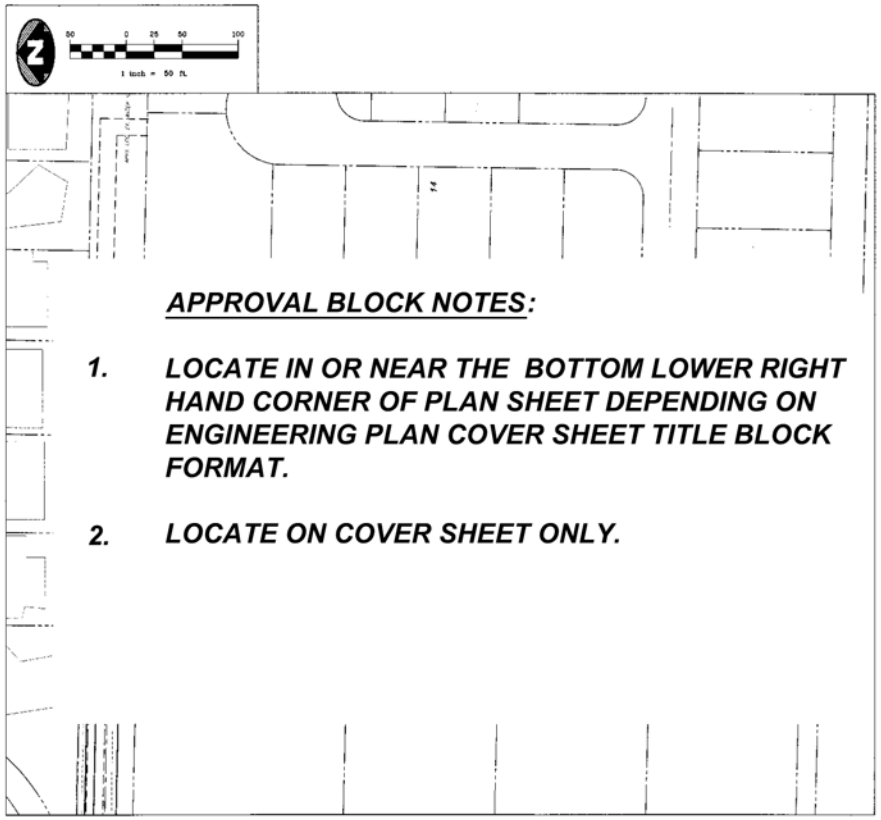

APPROVAL BLOCK NOTES:

1. ***LOCATE IN OR NEAR THE BOTTOM LOWER RIGHT HAND CORNER OF PLAN SHEET DEPENDING ON ENGINEERING PLAN COVER SHEET TITLE BLOCK FORMAT.***

2. ***LOCATE ON COVER SHEET ONLY.***

PLAT OVERVIEW

1" = 50'

5.0"

1.75"

SAMMAMISH PLATEAU WATER & SEWER DISTRICT

APPROVED FOR CONSTRUCTION

GENERAL MANAGER

DATE

NOT TO SCALE

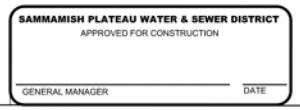

Recording Requested By And
When Recorded Mail To:

Sammamish Plateau Water and Sewer District
1510 - 228th Avenue S.E.
Sammamish, Washington 98075

DOCUMENT TITLE: *EASEMENT FOR WATER LINES*
REFERENCE NUMBER OF RELATED DOCUMENT: *Not Applicable*
GRANTOR(S):
ADDITIONAL GRANTORS ON PAGE OF DOCUMENT
GRANTEE(S): *SAMMAMISH PLATEAU WATER & SEWER DISTRICT*
ADDITIONAL GRANTEES ON PAGE OF DOCUMENT
ABBREVIATED LEGAL DESCRIPTION:
ASSESSOR'S TAX / PARCEL NUMBER(S):

EASEMENT FOR WATER LINES

The undersigned, _____ ("Grantor"), for and in consideration of good and valuable consideration, the receipt and adequacy of which are hereby acknowledged, hereby grants and conveys to Sammamish Plateau Water and Sewer District, a municipal corporation in King County, Washington ("Grantee"), and its successors and assigns, a permanent Easement for Water Lines including water lines and appurtenances thereto ("Easement") as follows:

1. Nature and Location of Easement. Grantor owns that certain real property legally described in ***Exhibit "A"***, attached hereto and incorporated herein by this reference ("Real Property"). The Easement granted by Grantor herein shall be a permanent easement for the benefit of Grantee over, upon, across, through and under a portion of the Real Property, such Easement as legally described on ***Exhibit "B"*** and as described and depicted on ***Exhibit "C",*** attached hereto and incorporated herein by this reference, for the purposes of installing, laying, constructing, maintaining, inspecting, repairing, removing, replacing, renewing, using and operating water lines, together with all facilities, connectors and appurtenances ("Water Lines"), including the right of ingress and egress with all necessary vehicles and equipment for said purposes.

2. Right of Entry. Grantee shall have the right, without notice and without prior institution of any suit or proceeding at law or equity, at all times as may be necessary to enter upon the Real Property to install, lay, construct, maintain, inspect, repair, remove, replace, renew, use and operate the Water Lines for the purposes of serving the Real Property and other properties with utility service. Grantee agrees to restore the Real Property as nearly as reasonably possible to its

condition prior to any material disturbance from construction, operation, maintenance, repair, or replacement of the Water Lines.

3. Encroachment/Construction Activity. Grantor shall not undertake, authorize, permit or consent to any construction or excavation including, without limitation, digging, tunneling, or other forms of construction activity on or near the Easement which might in any fashion unearth, undermine, or damage the Water Lines or endanger the lateral or other support of the Water Lines without Grantee's prior written approval. Grantor further agrees that no structure or obstruction including, without limitation, fences and rockeries shall be erected over, upon or within the Easement, and no trees, bushes or other shrubbery shall be planted or maintained within the Easement, provided Grantor shall have full use of the surface of the Real Property within the Easement, so long as such use does not interfere with the Easement or the Water Lines.

4. Binding Effect/ Warranty of Title. The Easement and the covenants, terms, and conditions contained herein are intended to and shall run with the Real Property and shall be binding upon Grantee and Grantor and their respective successors, heirs and assigns. Grantor warrants that Grantor has good title to the Real Property and warrants the Grantee title to and quiet enjoyment of the Easement.

5. Recording. Upon its execution, the Easement shall be recorded with the Department of Records and Elections, King County, Washington.

DATED this _____ day of _____, _____.

GRANTOR(S)

By _____

By _____

_____
(Print or type name(s))

Its _____
(Print or type position held)

STATE OF WASHINGTON)
) ss.
COUNTY OF KING)

I certify that I know or have satisfactory evidence that _____ is the person who appeared before me, and said person acknowledged that he/she signed this instrument and acknowledged it to be his/her free and voluntary act, for the uses and purposes mentioned in the instrument.

SUBSCRIBED AND SWORN to before me this _____ day of _____, _____.

_____
_____ (Printed Name)
NOTARY PUBLIC in and for the State of Washington.
My Commission Expires _____

STATE OF WASHINGTON)
) ss.
COUNTY OF KING)

I certify that I know or have satisfactory evidence that _____ is the person who appeared before me, and said person acknowledged that he/she signed this instrument, on oath stated that he/she was authorized to execute the instrument, and acknowledged it as the _____ of _____, to be the free and voluntary act of such entity, for the uses and purposes mentioned in the instrument.

SUBSCRIBED AND SWORN to before me this _____ day of _____, _____.

_____
_____ (Printed Name)
NOTARY PUBLIC in and for the State of Washington.
My Commission Expires _____

EXHIBIT A

LEGAL DESCRIPTION OF REAL PROPERTY

EXHIBIT B

LEGAL DESCRIPTION OF WATER EASEMENT

EXHIBIT C
DEPICTION OF WATER EASEMENT

EXHIBIT A
LEGAL DESCRIPTION OF REAL PROPERTY

insert "Real Property" legal description – maintain 1-inch margins on all sides

For example,

That portion of the South 125 feet of the East 318.5 feet of the S ½ of the SE ¼ of the NE ¼ of the NE ¼ of Section xx, Township yy North, Range zz East, Willamette Meridian, in King County, Washington.

Or

Lot x of the Plat of xx recorded on Pages yyy to zzzz, Volume X of Plats, located in King County, Washington.

SAMPLE

EXHIBIT B
LEGAL DESCRIPTION OF WATER EASEMENT

insert "Water Easement" legal description – maintain 1-inch margins on all sides

For example,

The water easement occupies that portion of the west half of the northeast quarter of the northeast quarter of Section xx, Township yy N, Range zz E, Willamette Meridian, in King County, Washington, known as Tax Lot No. _____-_____, lying within the area described as follows:

Commencing at the southeast corner of said property, thence N0°48'12"E for a distance of 15.00 feet, thence N89°32'3"W for a distance of 161.61 feet, thence … to the point of origin of this description.

SAMPLE

EXHIBIT C
DEPICTION OF WATER EASEMENT

Insert depiction of "Water Easement" on the "Real Property" – maintain 1-inch margins on all sides

SAMPLE

Recording Requested By And
When Recorded Mail To:

Sammamish Plateau Water and Sewer District
1510 - 228th Avenue S.E.
Sammamish, Washington 98075

DOCUMENT TITLE: *EASEMENT FOR SEWER LINES WITH ACCESS ROAD*
REFERENCE NUMBER OF RELATED DOCUMENT: *Not Applicable*
GRANTOR(S):
ADDITIONAL GRANTORS ON PAGE OF DOCUMENT
GRANTEE(S): *SAMMAMISH PLATEAU WATER & SEWER DISTRICT*
ADDITIONAL GRANTEES ON PAGE OF DOCUMENT
ABBREVIATED LEGAL DESCRIPTION:
ASSESSOR'S TAX / PARCEL NUMBER(S):

EASEMENT FOR SEWER LINES WITH ACCESS ROAD

The undersigned, _____ ("Grantor"), for and in consideration of good and valuable consideration, the receipt and adequacy of which are hereby acknowledged, hereby grants and conveys to Sammamish Plateau Water and Sewer District, a municipal corporation in King County, Washington ("Grantee), and its successors and assigns, a permanent Easement for Sewer Lines including sewer lines and appurtenances thereto ("Easement") as follows:

1. Nature and Location of Easement. The Easement granted by Grantor herein shall be a permanent easement for the benefit of Grantee over, upon, across, through and under the real property legally described in ***Exhibit "A",*** attached hereto and incorporated herein by this reference ("Real Property"), such Easement as legally described on ***Exhibit "B"*** and as described and depicted on ***Exhibit "C",*** attached hereto and incorporated herein by this reference, for the purposes of installing, laying, constructing, maintaining, inspecting, repairing, removing, replacing, renewing, using and operating sewer lines, together with all facilities, connectors and appurtenances ("Sewer Lines"), including the right of ingress and egress for said purposes.

2. Access Easement and Access Road. Grantor also hereby dedicates, conveys and grants to Grantee a permanent non-exclusive access easement and access road for ingress and egress over the portion of the Real Property as legally described on ***Exhibit "D"*** attached hereto ("Access Easement and Access Road") and as depicted on ***Exhibit "E"*** attached hereto.

3. Right of Entry. Grantee shall have the right, without notice and without prior institution of any suit or proceeding at law or equity, at all times as may be necessary to enter upon the Real Property to install, lay, construct, maintain, inspect, repair, remove, replace, renew, use and operate the Sewer Lines for the purposes of serving the Real Property and other properties with

utility service. Grantee agrees to restore the Real Property as nearly as reasonably possible to its condition prior to any material disturbance from construction, operation, maintenance, repair, or replacement of the Sewer Lines.

4. Encroachment/Construction Activity. Grantor shall not undertake, authorize, permit or consent to any construction or excavation including, without limitation, digging, tunneling, or other forms of construction activity on or near the Easement which might in any fashion unearth, undermine, or damage the Sewer Lines or endanger the lateral or other support of the Sewer Lines without Grantee's prior written approval. Grantor further agrees that no structure or obstruction including, without limitation, fences and rockeries shall be erected over, upon or within the Easement, and no trees, bushes or other shrubbery shall be planted or maintained within the Easement, provided Grantor shall have full use of the surface of the Real Property within the Easement, so long as such use does not interfere with the Easement or the Sewer Lines.

5. Binding Effect/ Warranty of Title. The Easement and the covenants, terms, and conditions contained herein are intended to and shall run with the Real Property and shall be binding upon Grantee and Grantor and their respective successors, heirs and assigns. Grantor warrants that Grantor has good title to the Real Property and warrants the Grantee title to and quiet enjoyment of the Easement.

6. Recording. Upon its execution, the Easement shall be recorded with the Department of Records and Elections, King County, Washington.

DATED this _____ day of _____, _____.

GRANTOR(S)

By _____

_____
(Print or type name(s))

By _____

_____
(Print or type name(s))

Its _____
(Print or type position held)

STATE OF WASHINGTON)
) ss.
COUNTY OF KING)

I certify that I know or have satisfactory evidence that _____ is the person who appeared before me, and said person acknowledged that he/she signed this instrument and acknowledged it to be his/her free and voluntary act, for the uses and purposes mentioned in the instrument.

SUBSCRIBED AND SWORN to before me this _____ day of _____, _____.

_____
_____ (Printed Name)
NOTARY PUBLIC in and for the State of Washington.
My Commission Expires _____

STATE OF WASHINGTON)
) ss.
COUNTY OF KING)

I certify that I know or have satisfactory evidence that _____ is the person who appeared before me, and said person acknowledged that he/she signed this instrument, on oath stated that he/she was authorized to execute the instrument, and acknowledged it as the _____ of _____, to be the free and voluntary act of such entity, for the uses and purposes mentioned in the instrument.

SUBSCRIBED AND SWORN to before me this _____ day of _____, _____.

_____
_____ (Printed Name)
NOTARY PUBLIC in and for the State of Washington.
My Commission Expires _____

EXHIBIT A

LEGAL DESCRIPTION OF REAL PROPERTY

EXHIBIT B

LEGAL DESCRIPTION OF SEWER EASEMENT

EXHIBIT C
DEPICTION OF SEWER EASEMENT

EXHIBIT D

LEGAL DESCRIPTION OF ACCESS EASEMENT AND ACCESS ROAD

EXHIBIT E

DEPICTION OF ACCESS EASEMENT AND ACCESS ROAD

EXHIBIT A
LEGAL DESCRIPTION OF REAL PROPERTY

insert "Real Property" legal description – maintain 1-inch margins on all sides

For example,
TAX PARCEL xxxxxxxxxx
That portion of the South 125 feet of the East 318.5 feet of the S ½ of the SE ¼ of the NE ¼ of the NE ¼ of Section xx, Township yy North, Range zz East, Willamette Meridian, in King County, Washington.

Or

Lot x of the Plat of xx recorded on Pages yyy to zzzz, Volume X of Plats, located in King County, Washington.

SAMPLE

EXHIBIT B
LEGAL DESCRIPTION OF SEWER EASEMENT

insert "Sewer Easement" legal description – maintain 1-inch margins on all sides

For example,

The sewer easement occupies that portion of the west half of the northeast quarter of the northeast quarter of Section xx, Township yy N, Range zz E, Willamette Meridian, in King County, Washington, known as Tax Lot No. _____-_____, lying within the area described as follows:

Commencing at the southeast corner of said property, thence N0°48'12"E for a distance of 15.00 feet, thence N89°32'3"W for a distance of 161.61 feet, thence … to the point of origin of this description.

SAMPLE

EXHIBIT C
DEPICTION OF SEWER EASEMENT

Insert depiction of "Sewer Easement" on the "Real Property" – maintain 1-inch margins on all sides

SAMPLE

EXHIBIT D
LEGAL DESCRIPTION OF ACCESS EASEMENT AND ACCESS ROAD

insert legal description of the access road – maintain 1-inch margins on all sides. Include hammerhead turnarounds (40-foot inside radius) if needed. Note that some or all of the legal description for the access road MAY have the same legal description as for the sewer easement, but it must be a separate exhibit

For example,

The access road is a 12-foot wide gravel road is centered within the 15-foot access easement.

The access road occupies that portion of the west half of the northeast quarter of the northeast quarter of Section xx, Township yy N, Range zz E, Willamette Meridian, in King County, Washington, known as Tax Lot No. _____-_____, lying within the area described as follows:

Commencing at the southeast corner of said property, thence N0°48'12"E for a distance of 12.00 feet, thence N89°32'3"W for a distance of 161.61 feet, thence … to the point of origin of this description.

SAMPLE

EXHIBIT E
DEPICTION OF ACCESS EASEMENT AND ACCESS ROAD

Insert pictorial depiction of the access road, including what kind of surfacing (gravel, paved, etc), on the "Real Property" – maintain 1-inch margins on all sides. Include hammerhead turnarounds (40-foot inside radius) if needed

SAMPLE

CASH PERFORMANCE AND PLEDGE OF MONIES AGREEMENT

THIS AGREEMENT ("Agreement") is made this ____ day of _____, _____ between Sammamish Plateau Water and Sewer District, a municipal corporation ("District"), and _____ ("Developer") (individually a "Party" and collectively the "Parties").

SECTION 1: RECITALS

1.01 The District and the Developer are parties to a _____ (Water/Sewer) Developer Extension Agreement dated the _____ day of _____, _____ ("Extension Agreement"), regarding the construction of certain extension improvements for the project known as _____ ("Project") referenced therein.

1.02 Pursuant to paragraph WS-11, "Performance Guarantee", of the Extension Agreement, the Developer is required to furnish the District with a performance guarantee to guarantee the completion and acceptance of the extension improvements for the project. Pursuant to such provision, the Developer desires to furnish the District a cash bond in lieu of a corporate surety performance bond as the required performance guarantee.

1.03 The District will accept, hold and disburse such cash bond as set forth below.

1.04 Therefore, the Parties, in consideration of the terms and conditions herein stated, now agree as follows:

SECTION 2: CASH PERFORMANCE BOND

2.01 The Developer shall provide the District cash funds ("Funds") in the amount of U.S._____ Dollars ($_____) to guarantee the Developer's performance of the Extension Agreement referenced in paragraph 1.01 above.

2.02 The District shall hold and deposit such funds in a non-interest-bearing account with the King County Department of Finance ("Bank"), such account to be in the sole name of the District.

2.03 The conditions under which the District will disburse or utilize such Funds for the completion of the Developer's obligations under the Extension Agreement are such that:

a. If the extension improvements which are the subject of the Extension Agreement are completed and are given final acceptance by the District within eighteen (18) months from the date of payment of the Design and Inspection Phase Fees to the District as required by the Extension Agreement, the District shall disburse the Funds, less charges for District administrative and other costs referenced in this Agreement, to the Developer within thirty (30) days of such acceptance; or

b. If the extension improvements which are the subject of the Extension Agreement are not completed and accepted by the District within eighteen (18) months of the date referenced above, the District shall have the right to use the Funds to complete such extension improvements to the District's satisfaction and specifications referenced in the Extension Agreement and the Bank shall release the Funds to the District for that purpose upon demand by the District to do so; in such event, the District shall return any unused Funds thereon to the Developer within thirty (30) days of the completion and acceptance of the extension improvements by the District.

SECTION 3: PLEDGE AND SECURITY AGREEMENT

3.01 Developer hereby grants to the District, its successors and assigns, a security interest in the Funds pursuant to Chapter 62A.9A RCW, including RCW 62A.9A-312, 313 and 314, and as such statutes may be amended and revised, which Funds will be delivered to the District and placed in the District's possession and control. Developer further grants to the District a security interest in all proceeds of the Funds, whether in the form of profits, dividends, accrued interest or otherwise.

3.02 For purposes of the security interest granted herein, Bank shall be the agent of the District for possession of the Funds such that possession of the Funds by Bank shall be deemed to be possession of the Funds by the District.

3.03 Developer warrants that, except as provided for herein, Developer has full title to the Funds and the Funds are free and clear of any other security interest, encumbrance, or claim of right, title or ownership. Developer will not create or permit the existence of any lien or security interest other than that hereby created in the Funds without the express written consent of the District nor shall Developer assign any interest in the Funds without said written consent.

3.04 Developer agrees to repay to the District all sums which the District may expend or incur in conserving or protecting the Funds, or in enforcing its security interest herein, including without limitation such sums as may be charged by Bank or any governmental entity with respect to the Funds. The sums agreed to be paid herein shall be secured by this Agreement.

3.05 The District shall have the right to enforce and collect on its security interest in the Funds in accordance with the terms and provisions contained in this Agreement. Enforcement and collection of the District's security interest in the Funds shall be in addition to all other rights and remedies granted by law, equity or contract to the District to seek reimbursement of additional damages incurred and/or to enforce the provisions of the Extension Agreement and this Agreement, should the Funds be insufficient to discharge the Developer's obligations to the District.

SECTION 4: GENERAL PROVISIONS

4.01 This Agreement shall serve as an addendum to the Extension Agreement and shall supersede and amend such Extension Agreement to the extent provided herein.

4.02 All time limits set forth herein are of the essence. All parties agree to perform all obligations under this Agreement with due diligence.

4.03 In the event that this Agreement or any obligation secured by it is referred to an attorney for protecting or defending the priority of the District's interest in the Funds, or for collection or realization procedures, Developer agrees to pay a reasonable attorney's fee, including fees incurred in both trial and appellate courts or fees incurred without suit, and all court costs and costs of the public officials. The sums agreed to be paid herein shall be secured by this Agreement.

4.04 The District will cause to be performed certain services by its legal counsel, engineers and District personnel to carry out the foregoing purposes, including but not limited to the preparation and administration of this and any related agreements and documents. The Developer agrees to pay the cost of such services as a condition of the District's agreement herein.

4.05 This Agreement shall be governed by and construed in accordance with the laws of the State of Washington. The State of Washington shall also be the jurisdiction for the Bank for the purposes of this Agreement pursuant to RCW 62A.9A-304(b). Venue for any action arising out of or relating to this Agreement shall lie in King County Superior Court.

SAMMAMISH PLATEAU
WATER AND SEWER DISTRICT
("District)

_____

_____
("Developer")

By _____

Its _____

By _____

Its _____

KING COUNTY DEPARTMENT OF FINANCE (“BANK”) hereby consents and agrees that it is the agent of SAMMAMISH PLATEAU WATER AND SEWER DISTRICT ("District") for purposes of possession by Sammamish Plateau Water and Sewer District of cash funds in the amount of _____ ($_____), which funds the District has a security interest in pursuant to this Agreement and pursuant to RCW 62A.9-304.
DATED this _____ day of _____, _____.

KING COUNTY DEPARTMENT OF FINANCE ("BANK"),

By_____

Its_____

STATE OF WASHINGTON)
)ss.
COUNTY OF KING)

I certify that I know or have satisfactory evidence that _____ is the person who appeared before me, and said person acknowledged that _____ signed this instrument, on oath stated that _____ was authorized to execute the instrument and acknowledged it as the _____ of **KING COUNTY DEPARTMENT OF FINANCE** to be the free and voluntary act of such corporation for the uses and purposes mentioned in the instrument.

Dated _____

_____

Notary Public in and for the State of Washington, residing at

_____

My Appointment Expires:_____

STATE OF WASHINGTON)
)ss.
COUNTY OF KING)

I certify that I know or have satisfactory evidence that _____ is the person who appeared before me, and said person acknowledged that _____ signed this instrument, on oath stated that _____ was authorized to execute the instrument and acknowledged it as the _____ of _____ to be the free and voluntary act of such corporation for the uses and purposes mentioned in the instrument.

Dated _____

_____

Notary Public in and for the State of Washington, residing at

_____

My Appointment Expires:_____

STATE OF WASHINGTON)
)ss.
COUNTY OF KING)

I certify that I know or have satisfactory evidence that _____ is the person who appeared before me, and said person acknowledged that _____ signed this instrument, on oath stated that _____ was authorized to execute the instrument and acknowledged it as the _____ of **SAMMAMISH PLATEAU WATER AND SEWER DISTRICT** to be the free and voluntary act of such corporation for the uses and purposes mentioned in the instrument.

Dated _____

_____

Notary Public in and for the State of Washington, residing at

_____

My Appointment Expires:_____

PERFORMANCE BOND

SAMMAMISH PLATEAU WATER AND
SEWER DISTRICT
1510 - 228TH Ave. S.E.
Sammamish, Washington 98075

KNOW ALL MEN BY THESE PRESENTS: That we, _____, as Principal, and _____, authorized to transact business in the State of Washington, as Surety, having its principal office and place of business at _____, are held and firmly bound unto Sammamish Plateau Water and Sewer District ("the District"), King County, Washington, as Obligee, in the sum of _____ Dollars ($_____) lawful money of the United States of America, for which payments we and each of us bind ourselves, our heirs, executors, administrators, successors and assigns, jointly and severally, firmly by these presents.

The conditions of the above obligation are such that:

WHEREAS, the above named Principal has entered into a certain developer extension agreement with the District for the installation of water and/or sanitary sewer improvements by extension agreement dated the _____ day of _____, _____ as is more and fully described in such extension agreement;

AND that said extension improvements shall be completed within eighteen (18) months from the date of the payment of the Design and Inspection Phase Fees to the District as required by the extension agreement, unless extended as herein provided,

NOW, THEREFORE, it is understood and agreed that this obligation shall continue in effect until released in writing by the District, King County, Washington;

AND in the event that if the Principal shall well and truly and in good, sufficient and workmanlike manner, perform or cause to be performed the extension contract, and each and every of the covenants, promises, agreements and provisions therein stipulated, and in each and every respect comply with the conditions therein contained, then this obligation shall be void and promptly released by Sammamish Plateau Water and Sewer District, otherwise to remain in full force and effect.

AND the Surety hereby waives notice of any alteration or extension of time made by the District.

SIGNED, sealed and delivered this ___ day of _____, _____.

By _____	By _____
_____	_____
	SURETY
_____	_____
PRINCIPAL	(Title)
_____	_____
(Print or type name(s))	(Print or type name(s))
_____	_____
_____	_____
_____	_____
Mailing Address	Mailing Address
	Attorney in Fact _____
	(ATTACH POWER OF ATTORNEY)

SAMPLE PERFORMANCE BOND FOR CONTRACTOR/DEVELOPER

PERFORMANCE BOND

SAMMAMISH PLATEAU WATER AND SEWER DISTRICT
1510 - 228TH Ave. S.E.
Sammamish, Washington 98029

KNOW ALL MEN BY THESE PRESENTS: That we, *CONTRACTOR/DEVELOPER*_____, as Principal, and *SURETY*_____, authorized to transact business in the State of Washington, as Surety, having its principal office and place of business at *SURETY'S ADDRESS*_____, are held and firmly bound unto Sammamish Plateau Water and Sewer District ("the District"), King County, Washington, as Obligee, in the sum of _____ Dollars ($_____) lawful money of the United States of America, for which payments we and each of us bind ourselves, our heirs, executors, administrators, successors and assigns, jointly and severally, firmly by these presents.

The conditions of the above obligation are such that:

WHEREAS, the above named Principal has entered into a certain developer extension agreement with the District for the installation of water and/or sanitary sewer improvements by extension agreement dated the _____ day of _____, _____ as is more and fully described in such extension agreement;

AND that said extension improvements shall be completed within eighteen (18) months from the date of the payment of the Design and Inspection Phase Fees to the District as required by the extension agreement, unless extended as herein provided,

NOW, THEREFORE, it is understood and agreed that this obligation shall continue in effect until released in writing by the District, King County, Washington;

AND in the event that if the Principal shall well and truly and in good, sufficient and workmanlike manner, perform or cause to be performed the extension contract, and each and every of the covenants, promises, agreements and provisions therein stipulated, and in each and every respect comply with the conditions therein contained, then this obligation shall be void and promptly released by Sammamish Plateau Water and Sewer District, otherwise to remain in full force and effect.

AND the Surety hereby waives notice of any alteration or extension of time made by the District.

SIGNED, sealed and delivered this ___ day of _____, _____.

By _____	By _____
_____	_____
	SURETY
PRINCIPAL	(Title)
_____	_____
(Print or type name(s))	(Print or type name(s))
_____	_____
_____	_____
_____	_____
Mailing Address	Mailing Address
	Attorney in Fact _____
	(ATTACH POWER OF ATTORNEY)

SAMPLE LETTER OF CREDIT FORM
ACCEPTABLE TO THE DISTRICT

Standby LC Number _____

IRREVOCABLE LETTER OF CREDIT

_____, _____

LETTER OF CREDIT NUMBER _____

BENEFICIARY:
SAMMAMISH PLATEAU WATER & SEWER DISTRICT
1510 - 228TH AVENUE S.E.
SAMMAMISH, WASHINGTON 98029

ACCOUNT PARTY:
(DEVELOPER) _____

_____

_____

AMOUNT: USD
$_____

_____

WE HEREBY ISSUE OUR IRREVOCABLE STANDBY LETTER OF CREDIT IN YOUR FAVOR WHICH IS AVAILABLE AGAINST PRESENTATION OF THE FOLLOWING:

1. YOUR SIGHT DRAFT DRAWN ON _____ (BANK NAME) AND STATING THE LETTER OF CREDIT NUMBER.

2. CERTIFICATION PURPORTEDLY SIGNED BY THE PRESIDENT OF THE BOARD OF COMMISSIONERS OF SAMMAMISH PLATEAU WATER & SEWER DISTRICT, SAMMAMISH, WASHINGTON, AS FOLLOWS:

   A. AT LEAST 548 DAYS HAVE PASSED SINCE THE DATE OF THE PAYMENT OF THE DESIGN AND INSPECTION PHASE FEES TO THE DISTRICT, THE _____ DAY OF _____, _____ (D.E. DATE), AS REQUIRED IN THAT CERTAIN WATER AND/OR SEWER "DEVELOPER EXTENSION AGREEMENT" DATED _____ BETWEEN SAMMAMISH PLATEAU WATER AND SEWER DISTRICT AND _____ (DEVELOPER); AND

   B. _____ (DEVELOPER) HAS NOT COMPLETED AND SAMMAMISH PLATEAU WATER AND SEWER DISTRICT HAS NOT YET GIVEN FINAL ACCEPTANCE TO THE EXTENSION IMPROVEMENTS REFERENCED IN SUCH WATER AND/OR SEWER "DEVELOPER EXTENSION AGREEMENT" DATED _____.

3. THE ORIGINAL OF THIS STANDBY LETTER OF CREDIT.

THIS LETTER OF CREDIT EXPIRES AT THE COUNTERS OF _____ _____ (BANK), LETTER OF CREDIT DEPARTMENT, CURRENTLY LOCATED AT _____ _____ (BANK ADDRESS) ON _____ (19 MONTHS AFTER D.E. DATE)

SPECIAL CONDITIONS:

1. ANY AMENDMENTS UNDER THIS STANDBY LETTER OF CREDIT ARE SUBJECT TO THE APPROVAL OF THE BENEFICIARY AND THE ACCOUNTEE.

WE HEREBY ENGAGE WITH YOU THAT DRAFTS AND DOCUMENTS DRAWN UNDER AND IN STRICT COMPLIANCE WITH THE TERMS OF THIS LETTER OF CREDIT WILL BE DULY HONORED UPON PRESENTATION TO US.

THIS LETTER OF CREDIT IS SUBJECT TO UCP 1983 REVISION ICC PUBLICATION NUMBER 400.

VERY TRULY YOURS,

_____ (BANK NAME)

BY _____
AUTHORIZED SIGNATURE

BY _____
AUTHORIZED SIGNATURE

CORPUS

PROJECT NAME: _____

MATERIALS & EQUIPMENT SUBMITTAL LIST

Prior to scheduling a pre-construction meeting, contractors shall provide equipment and material lists (with catalogue cuts/ technical specifications) for all applicable water and sewer system items, which indicate compliance with the District's material standards.

The submittal "packet" shall be bound by three ring binders or soft folders that accommodate three-hole paper. The submittal packet shall be labeled, identifying the project name and contractor and submitted in three (3) separate sets, sequentially numbered (preferably "tabbed") with a cover letter identifying each submittal item number, submittal description, Manufacturer, and Model # in a similar format as follows for sewer and water systems:

Sewer System Submittals:

Submittal Item No.	Description	Manufacturer	Model #	**For District Use Only** FIELD CHECK Approved product delivered/ installed on Project?
1.	Sewer Pipe (gravity, low pressure and force main systems)			❑Yes ❑No Field Check _____ Date
2.	Sewer Fittings			❑Yes ❑No Field Check _____ Date
3.	Restrained Joints			❑Yes ❑No Field Check _____ Date
4.	Manhole Structures			❑Yes ❑No Field Check _____ Date
5.	Manhole Joint Gaskets			❑Yes ❑No Field Check _____ Date
6.	Manhole Adapters	*(Kor-N-Seal or equal)*		❑Yes ❑No Field Check _____ Date
7.	Manhole Frame & Grate			❑Yes ❑No Field Check _____ Date
8.	Manhole Ladders			❑Yes ❑No Field Check _____ Date
9.	Manhole Steps			❑Yes ❑No Field Check _____ Date
10.	Clean outs (non-pressure systems)			❑Yes ❑No Field Check _____ Date
11.	Clean Outs (pressure systems)			❑Yes ❑No Field Check _____ Date
12.	Manhole Lining (pressure systems)			❑Yes ❑No Field Check _____ Date
13.	Air-vac Assemblies (pressure systems)			❑Yes ❑No Field Check _____ Date
14.	Grease Interceptor/Oil Water Separator			❑Yes ❑No Field Check _____ Date

PROJECT NAME: _____

Water System Submittals:

Submittal Item No.	Description	Manufacturer	Model #	**For District Use Only** FIELD CHECK Approved product delivered/ installed on Project?
1.	Water system pipe			❑Yes ❑No Field Check _____ Date
2.	Water system fittings			❑Yes ❑No Field Check _____ Date
3.	Restrained Joints			❑Yes ❑No Field Check _____ Date
4.	Polywrap for DI pipe			❑Yes ❑No Field Check _____ Date
5.	Valves (specify sizes) Gate Butterfly			❑Yes ❑No Field Check _____ Date
6.	Tapping Sleeves & Valve Assembly			❑Yes ❑No Field Check _____ Date
7.	Valve Boxes			❑Yes ❑No Field Check _____ Date
8.	Valve Marker Posts			❑Yes ❑No Field Check _____ Date
9.	Hydrants			❑Yes ❑No Field Check _____ Date
10.	Hydrant Guard Posts			❑Yes ❑No Field Check _____ Date
11.	Storz Adapter			❑Yes ❑No Field Check _____ Date
12.	Service Saddle			❑Yes ❑No Field Check _____ Date
13.	Service Pipe	*(DriscoPlex Ultraline 5100, Eagle Pipe)*		❑Yes ❑No Field Check _____ Date
14.	Meter Setters			❑Yes ❑No Field Check _____ Date
15.	Corp. Stops			❑Yes ❑No Field Check _____ Date
16.	Joint Couplers			❑Yes ❑No Field Check _____ Date
17.	Service Fittings			❑Yes ❑No Field Check _____ Date
18.	Meter Boxes			❑Yes ❑No Field Check _____ Date
19.	Galvanized Fittings for Blow-offs and Air-vacs			❑Yes ❑No Field Check _____ Date
20.	Air-vac Assemblies	*APCO No 143-C (1")* *APCO No. 145-C (2")*		❑Yes ❑No Field Check _____ Date
21.	Backflow Prevention Devices (list by type and location)			❑Yes ❑No Field Check _____ Date

SAMPLE CERTIFICATE OF LIABILITY
(SEE CONTRACT FOR EXACT LIMITS)

ACORD™ CERTIFICATE OF LIABILITY INSURANCE

DATE (MM/DD/YYYY): 08/26/03

PRODUCER
Contractors Insurance Services
P.O. Box 1000
Anytown, WA
License No. 123456

THIS CERTIFICATE IS ISSUED AS A MATTER OF INFORMATION ONLY AND CONFERS NO RIGHTS UPON THE CERTIFICATE HOLDER. THIS CERTIFICATE DOES NOT AMEND, EXTEND OR ALTER THE COVERAGE AFFORDED BY THE POLICIES BELOW.

INSURED
ABC Construction Co.
123 Main Street
Hometown, WA

INSURERS AFFORDING COVERAGE	NAIC #
INSURER A: Travelers Insurance Co.	
INSURER B: Hartford	
INSURER C: Fireman's Fund	
INSURER D: DPIC	
INSURER E:	

COVERAGES

THE POLICIES OF INSURANCE LISTED BELOW HAVE BEEN ISSUED TO THE INSURED NAMED ABOVE FOR THE POLICY PERIOD INDICATED. NOTWITHSTANDING ANY REQUIREMENT, TERM OR CONDITION OF ANY CONTRACT OR OTHER DOCUMENT WITH RESPECT TO WHICH THIS CERTIFICATE MAY BE ISSUED OR MAY PERTAIN, THE INSURANCE AFFORDED BY THE POLICIES DESCRIBED HEREIN IS SUBJECT TO ALL THE TERMS, EXCLUSIONS AND CONDITIONS OF SUCH POLICIES. AGGREGATE LIMITS SHOWN MAY HAVE BEEN REDUCED BY PAID CLAIMS.

INSR LTR	ADD'L INSRD	TYPE OF INSURANCE	POLICY NUMBER	POLICY EFFECTIVE DATE (MM/DD/YY)	POLICY EXPIRATION DATE (MM/DD/YY)	LIMITS	
A		GENERAL LIABILITY ☒ COMMERCIAL GENERAL LIABILITY ☐ CLAIMS MADE ☒ OCCUR ☒ Stop Gap $1,000,000 ☐ GEN'L AGGREGATE LIMIT APPLIES PER: ☒ POLICY ☐ PROJECT ☐ LOC	GL1234	10/01/02	10/01/03	EACH OCCURRENCE	$ 2,000,000
						DAMAGE TO RENTED PREMISES (Ea occurrence)	$ 50,000
						MED EXP (Any one person)	$ 10,000
						PERSONAL & ADV INJURY	$ 2,000,000
						GENERAL AGGREGATE	$ 2,000,000
						PRODUCTS - COMP/OP AGG	$ 2,000,000
B		AUTOMOBILE LIABILITY ☒ ANY AUTO ☐ ALL OWNED AUTOS ☐ SCHEDULED AUTOS ☐ HIRED AUTOS ☐ NON-OWNED AUTOS ☐ ☐	AL1234	10/01/02	10/01/03	COMBINED SINGLE LIMIT (Ea accident)	$ 2,000,000
						BODILY INJURY (Per person)	$
						BODLY INJURY (Per accident)	$
						PROPERTY DAMAGE (Per accident)	$
		GARAGE LIABILITY ☐ ANY AUTO ☐				AUTO ONLY - EA ACCIDENT	$
						OTHER THAN AUTO ONLY: EA ACC	$
						AGG	$
C		EXCESS/UMBRELLA LIABILITY ☒ OCCUR ☐ CLAIMS MADE ☐ DEDUCTIBLE ☐ RETENTION $	XS2345	10/01/02	10/01/03	EACH OCCURRENCE	$ 2,000,000
						AGGREGATE	$ 2,000,000
							$
							$
							$
		WORKERS COMPENSATION AND EMPLOYERS' LIABILITY Washington Labor & Industries #_____				☐ WC STATUTORY LIMITS ☐ OTHER	
						E.L. EACH ACCIDENT	$
						E.L. DISEASE - EA EMPLOYEE	$
						E.L. DISEASE - POLICY LIMIT	$
D		OTHER Professional Liability	PL3456	10/01/02	10/01/03	2,000,000 per Claim 2,000,000 Aggregate	

DESCRIPTION OF OPERATIONS / LOCATIONS / VEHICLES / EXCLUSIONS ADDED BY ENDORSEMENT / SPECIAL PROVISIONS

(Member) District is an Additional Insured on General and Auto Liability Policies with respect to Pumphouse Construction Project for (Member) District at 456 Main Street Site.

CERTIFICATE HOLDER

(Member) District
456 Main Street
Hometown, WA

CANCELLATION

SHOULD ANY OF THE ABOVE DESCRIBED POLICIES BE CANCELLED BEFORE THE EXPIRATION DATE THEREOF, THE ISSUING INSURER WILL ~~ENDEAVOR TO~~ MAIL 45 DAYS WRITTEN NOTICE TO THE CERTIFICATE HOLDER NAMED TO THE LEFT, BUT FAILURE TO DO SO SHALL IMPOSE NO OBLIGATION OR LIABILITY OF ANY KIND UPON THE INSURER, ITS AGENTS OR REPRESENTATIVES. AUTHORIZED REPRESENTATIVE

AUTHORIZED REPRESENTATIVE
Contractor's Agent/Broker

© ACORD CORPORATION 1988

IMPORTANT

If the certificate holder is an ADDITIONAL INSURED, the policy(ies) must be endorsed. A statement on this certificate does not confer rights to the certificate holder in lieu of such endorsement(s).

If SUBROGATION IS WAIVED, subject to the terms and conditions of the policy, certain policies may require an endorsement. A statement on this certificate does not confer rights to the certificate holder in lieu of such endorsement(s).

DISCLAIMER

The Certificate of Insurance on the reverse side of this form does not constitute a contract between the issuing insurer(s), authorized representative or producer, and the certificate holder, nor does it affirmatively or negatively amend, extend or alter the coverage afforded by the policies listed thereon.

© ACORD CORPORATION 1988

ACORD™ CERTIFICATE OF LIABILITY INSURANCE

DATE (MM/DD/YYYY)

PRODUCER

THIS CERTIFICATE IS ISSUED AS A MATTER OF INFORMATION ONLY AND CONFERS NO RIGHTS UPON THE CERTIFICATE HOLDER. THIS CERTIFICATE DOES NOT AMEND, EXTEND OR ALTER THE COVERAGE AFFORDED BY THE POLICIES BELOW.

INSURERS AFFORDING COVERAGE	NAIC #
INSURER A:	
INSURER B:	
INSURER C:	
INSURER D:	
INSURER E:	

INSURED

COVERAGES

THE POLICIES OF INSURANCE LISTED BELOW HAVE BEEN ISSUED TO THE INSURED NAMED ABOVE FOR THE POLICY PERIOD INDICATED. NOTWITHSTANDING ANY REQUIREMENT, TERM OR CONDITION OF ANY CONTRACT OR OTHER DOCUMENT WITH RESPECT TO WHICH THIS CERTIFICATE MAY BE ISSUED OR MAY PERTAIN, THE INSURANCE AFFORDED BY THE POLICIES DESCRIBED HEREIN IS SUBJECT TO ALL THE TERMS, EXCLUSIONS AND CONDITIONS OF SUCH POLICIES. AGGREGATE LIMITS SHOWN MAY HAVE BEEN REDUCED BY PAID CLAIMS.

INSR LTR	ADD'L INSRD	TYPE OF INSURANCE	POLICY NUMBER	POLICY EFFECTIVE DATE (MM/DD/YY)	POLICY EXPIRATION DATE (MM/DD/YY)	LIMITS	
		GENERAL LIABILITY				EACH OCCURRENCE	$
		COMMERCIAL GENERAL LIABILITY				DAMAGE TO RENTED PREMISES (Ea occurence)	$
		CLAIMS MADE / OCCUR				MED EXP (Any one person)	$
						PERSONAL & ADV INJURY	$
						GENERAL AGGREGATE	$
		GEN'L AGGREGATE LIMIT APPLIES PER:				PRODUCTS - COMP/OP AGG	$
		POLICY / PRO-JECT / LOC					
		AUTOMOBILE LIABILITY				COMBINED SINGLE LIMIT (Ea accident)	$
		ANY AUTO					
		ALL OWNED AUTOS				BODILY INJURY (Per person)	$
		SCHEDULED AUTOS					
		HIRED AUTOS				BODILY INJURY (Per accident)	$
		NON-OWNED AUTOS					
						PROPERTY DAMAGE (Per accident)	$
		GARAGE LIABILITY				AUTO ONLY - EA ACCIDENT	$
		ANY AUTO				OTHER THAN AUTO ONLY: EA ACC	$
						AGG	$
		EXCESS/UMBRELLA LIABILITY				EACH OCCURRENCE	$
		OCCUR / CLAIMS MADE				AGGREGATE	$
							$
		DEDUCTIBLE					$
		RETENTION $					$
		WORKERS COMPENSATION AND EMPLOYERS' LIABILITY				WC STATU-TORY LIMITS / OTH-ER	
		ANY PROPRIETOR/PARTNER/EXECUTIVE OFFICER/MEMBER EXCLUDED?				E.L. EACH ACCIDENT	$
		If yes, describe under SPECIAL PROVISIONS below				E.L. DISEASE - EA EMPLOYEE	$
						E.L. DISEASE - POLICY LIMIT	$
		OTHER					

DESCRIPTION OF OPERATIONS / LOCATIONS / VEHICLES / EXCLUSIONS ADDED BY ENDORSEMENT / SPECIAL PROVISIONS

CERTIFICATE HOLDER

CANCELLATION

SHOULD ANY OF THE ABOVE DESCRIBED POLICIES BE CANCELLED BEFORE THE EXPIRATION DATE THEREOF, THE ISSUING INSURER WILL ENDEAVOR TO MAIL _____ DAYS WRITTEN NOTICE TO THE CERTIFICATE HOLDER NAMED TO THE LEFT, BUT FAILURE TO DO SO SHALL IMPOSE NO OBLIGATION OR LIABILITY OF ANY KIND UPON THE INSURER, ITS AGENTS OR REPRESENTATIVES.

AUTHORIZED REPRESENTATIVE

© ACORD CORPORATION 1988

IMPORTANT

If the certificate holder is an ADDITIONAL INSURED, the policy(ies) must be endorsed. A statement on this certificate does not confer rights to the certificate holder in lieu of such endorsement(s).

If SUBROGATION IS WAIVED, subject to the terms and conditions of the policy, certain policies may require an endorsement. A statement on this certificate does not confer rights to the certificate holder in lieu of such endorsement(s).

DISCLAIMER

The Certificate of Insurance on the reverse side of this form does not constitute a contract between the issuing insurer(s), authorized representative or producer, and the certificate holder, nor does it affirmatively or negatively amend, extend or alter the coverage afforded by the policies listed thereon.

SAMPLE ENDORSEMENT OF ADDITIONAL INSURED
(1985 Form covering both on-going and completed operations)

ISO | Commercial General Liability Forms | 11/01/85

POLICY NUMBER: COMMERCIAL GENERAL LIABILITY

THIS ENDORSEMENT CHANGES THE POLICY. PLEASE READ IT CAREFULLY.

ADDITIONAL INSURED -- OWNERS, LESSEES OR
CONTRACTORS (FORM B)

This endorsement modifies insurance provided under the following:

COMMERCIAL GENERAL LIABILITY COVERAGE PART.

SCHEDULE

Name of Person or Organization:

(If no entry appears above, information required to complete this endorsement will be shown in the Declarations as applicable to this endorsement.)

WHO IS AN INSURED (Section II) is amended to include as an insured the person or organization shown in the Schedule, but only with respect to liability arising out of "your work" for that insured by or for you.

CG 20 10 11 85 Copyright, Insurance Services Office, Inc., 1984

©ISO Properties, Inc.
©2004 Insurance Reference Systems, Inc. All Rights Reserved.

SAMPLE ALTERNATIVE ENDORSEMENT OF ADDITIONAL INSURED
(Alternative Forms to cover on-going and completed operations
Both of the following are required in place of CG 20 10 11 85)

POLICY NUMBER:

COMMERCIAL GENERAL LIABILITY
CG 20 10 10 01

THIS ENDORSEMENT CHANGES THE POLICY. PLEASE READ IT CAREFULLY.

ADDITIONAL INSURED – OWNERS, LESSEES OR CONTRACTORS – SCHEDULED PERSON OR ORGANIZATION

This endorsement modifies insurance provided under the following:

COMMERCIAL GENERAL LIABILITY COVERAGE PART

SCHEDULE

Name of Person or Organization:

(If no entry appears above, information required to complete this endorsement will be shown in the Declarations as applicable to this endorsement.)

A. Section II – Who Is An Insured is amended to include as an insured the person or organization shown in the Schedule, but only with respect to liability arising out of your ongoing operations performed for that insured.

B. With respect to the insurance afforded to these additional insureds, the following exclusion is added:

2. Exclusions

This insurance does not apply to "bodily injury" or "property damage" occurring after:

(1) All work, including materials, parts or equipment furnished in connection with such work, on the project (other than service, maintenance or repairs) to be performed by or on behalf of the additional insured(s) at the site of the covered operations has been completed; or

(2) That portion of "your work" out of which the injury or damage arises has been put to its intended use by any person or organization other than another contractor or subcontractor engaged in performing operations for a principal as a part of the same project.

© ISO Properties, Inc., 2000

THIS ENDORSEMENT CHANGES THE POLICY. PLEASE READ IT CAREFULLY.

ADDITIONAL INSURED – OWNERS, LESSEES OR CONTRACTORS – COMPLETED OPERATIONS

This endorsement modifies insurance provided under the following:

COMMERCIAL GENERAL LIABILITY COVERAGE PART

SCHEDULE

Name of Person or Organization:
Location And Description of Completed Operations:
Additional Premium:

(If no entry appears above, information required to complete this endorsement will be shown in the Declarations as applicable to this endorsement.)

Section II – Who Is An Insured is amended to include as an insured the person or organization shown in the Schedule, but only with respect to liability arising out of "your work" at the location designated and described in the schedule of this endorsement performed for that insured and included in the "products-completed operations hazard".

© ISO Properties, Inc., 2000

POLICY NUMBER:

COMMERCIAL GENERAL LIABILITY
CG 25 03 03 97

THIS ENDORSEMENT CHANGES THE POLICY. PLEASE READ IT CAREFULLY.

DESIGNATED CONSTRUCTION PROJECT(S) GENERAL AGGREGATE LIMIT

This endorsement modifies insurance provided under the following:

COMMERCIAL GENERAL LIABILITY COVERAGE PART

SCHEDULE

Designated Construction Projects:

(If no entry appears above, information required to complete this endorsement will be shown in the Declarations as applicable to this endorsement.)

A. For all sums which the insured becomes legally obligated to pay as damages caused by "occurrences" under COVERAGE **A** (SECTION **I**), and for all medical expenses caused by accidents under COVERAGE **C** (SECTION **I**), which can be attributed only to ongoing operations at a single designated construction project shown in the Schedule above:

1. A separate Designated Construction Project General Aggregate Limit applies to each designated construction project, and that limit is equal to the amount of the General Aggregate Limit shown in the Declarations.

2. The Designated Construction Project General Aggregate Limit is the most we will pay for the sum of all damages under COVERAGE **A,** except damages because of "bodily injury" or "property damage" included in the "products-completed operations hazard", and for medical expenses under COVERAGE **C** regardless of the number of:

a. Insureds;

b. Claims made or "suits" brought; or

c. Persons or organizations making claims or bringing "suits".

3. Any payments made under COVERAGE **A** for damages or under COVERAGE **C** for medical expenses shall reduce the Designated Construction Project General Aggregate Limit for that designated construction project. Such payments shall not reduce the General Aggregate Limit shown in the Declarations nor shall they reduce any other Designated Construction Project General Aggregate Limit for any other designated construction project shown in the Schedule above.

4. The limits shown in the Declarations for Each Occurrence, Fire Damage and Medical Expense continue to apply. However, instead of being subject to the General Aggregate Limit shown in the Declarations, such limits will be subject to the applicable Designated Construction Project General Aggregate Limit.

B. For all sums which the insured becomes legally obligated to pay as damages caused by "occurrences" under COVERAGE **A** (SECTION **I**), and for all medical expenses caused by accidents under COVERAGE **C** (SECTION **I**), which cannot be attributed only to ongoing operations at a single designated construction project shown in the Schedule above:

1. Any payments made under COVERAGE **A** for damages or under COVERAGE **C** for medical expenses shall reduce the amount available under the General Aggregate Limit or the Products-Completed Operations Aggregate Limit, whichever is applicable; and

2. Such payments shall not reduce any Designated Construction Project General Aggregate Limit.

C. When coverage for liability arising out of the "products-completed operations hazard" is provided, any payments for damages because of "bodily injury" or "property damage" included in the "products-completed operations hazard" will reduce the Products-Completed Operations Aggregate Limit, and not reduce the General Aggregate Limit nor the Designated Construction Project General Aggregate Limit.

 Copyright, Insurance Services Office, Inc., 1996

D. If the applicable designated construction project has been abandoned, delayed, or abandoned and then restarted, or if the authorized contracting parties deviate from plans, blueprints, designs, specifications or timetables, the project will still be deemed to be the same construction project.

E. The provisions of Limits Of Insurance (SECTION **III**) not otherwise modified by this endorsement shall continue to apply as stipulated.

Copyright, Insurance Services Office, Inc., 1996

SAMPLE QUESTIONNAIRE

NOTE: THIS QUESTIONNAIRE MUST BE COMPLETED AND ATTACHED TO CERTIFICATE OF INSURANCE AND POLICY ENDORSEMENT.

Insurance Coverage Questionnaire

For Big Toys Construction, Inc.
(Name of Insured)

Project Number 93-0011

Project Owner Big Mountain Water and Sewer District

Are the following coverages &/or conditions in effect?		
	Yes	No
The Policy form is ISO Commercial General Liability form CG 00 01 of CG 00 02 (circle one). If No, attach a copy of the policy with required coverages clearly identified.	X	
Products and Completed operations coverage	X	
Personal Injury Liability Coverage. (with employee exclusion deleted)	X	
Broad Form Property Damage with X, C, U Hazards included	X	
Blanket Contractual Liability coverage applying to this contract	X	
Employers Liability - Stop Gap	x	

Deductibles or SIRs: GL $500 AL None Excess $10,000

Insurer' Best Rating GL A-XI AL A-XV Excess A-XV

This Questionnaire is issued as a matter of information. This questionnaire is not an insurance policy and does not amend, extend or alter the coverage afforded by the policies indicated on the attached Certificate of Insurance.

ADF Insurance Agency
Agency/Broker

Jane Doolittle
Completed by (type)

1234 5th Street, Any Place, WA
Address

Completed by (Signature)

Sal Smith
Name of Person to contact

(206) 555-1234
Telephone Number

NOTE: **THIS QUESTIONNAIRE MUST BE COMPLETED AND ATTACHED TO CERTIFICATE OF INSURANCE AND POLICY ENDORSEMENT**.

Insurance Coverage Questionnaire

For _____
(Name of Insured)

Project Number _____

Project Owner _____

Are the following coverages &/or conditions in effect?		
	Yes	No
The Policy form is ISO Commercial General Liability form CG 00 01 of CG 00 02 (circle one). If No, attach a copy of the policy with required coverages clearly identified.		
Products and Completed operations coverage		
Personal Injury Liability Coverage. (with employee exclusion deleted)		
Broad Form Property Damage with X, C, U Hazards included		
Blanket Contractual Liability coverage applying to this contract		
Employers Liability - Stop Gap		

Deductibles or SIRs: GL _____ AL _____ Excess _____

Insurer' Best Rating GL _____ AL _____ Excess _____

This Questionnaire is issued as a matter of information. This questionnaire is not an insurance policy and does not amend, extend or alter the coverage afforded by the policies indicated on the attached Certificate of Insurance.

_____ _____
Agency/Broker Completed by (type)

_____ _____
Address Completed by (Signature)

_____ _____
Name of Person to contact Telephone Number

ACCEPTANCE BY PROPERTY OWNER OF
RESTORATION IMPROVEMENTS

I/We, the undersigned owner(s) of Real Property having the address and/or legal description as follows:

_____

_____

_____

_____

do hereby approve and accept the restoration work performed by
_____

_____, the developer/contractor on the construction of water and/or sewer utility improvements on easements over and across my/our property.

Date: _____

By: _____
Name: _____
Address: _____
_____
Telephone: _____

By: _____
Name: _____
Address: _____
_____
Telephone: _____

AFFIDAVIT OF NO LIENS

I/we, the undersigned developer(s) of water and/or sewer extension improvements for the project known as _____ pursuant to the developer extension agreement executed between the Sammamish Plateau Water and Sewer District and the undersigned on the _____ day of _____, _____, do hereby certify, represent, and warrant as follows:

1. That there are no liens against, or which may be filed against the water and/or sewer extension improvement which are the subject of the above-referenced developer extension agreement.

2. That all debts, wages, labor, and bills for material and all applicable state taxes have been paid in connection with the above-referenced water and/or sewer developer extension improvements.

Date: _____

By: _____
Name: _____
Address: _____
_____
Telephone: _____

STATE OF WASHINGTON)
)ss.
COUNTY OF KING)

I certify that I know or have satisfactory evidence that _____ is the person who appeared before me, and said person acknowledged that _____ signed this instrument, on oath stated that _____ was authorized to execute the instrument and acknowledged it as the _____ of _____ to be the free and voluntary act of such corporation for the uses and purposes mentioned in the instrument.

Dated _____

_____
Notary Public in and for the State of Washington, residing at

_____
My Appointment Expires:_____

BILL OF SALE - WATER

THE UNDERSIGNED hereby conveys and transfers to Sammamish Plateau Water and Sewer District (the "District"), Sammamish, Washington, the property described on Attachment A:

See Attachment A - Page 2 of 2

This conveyance is made in consideration of the District's agreement to provide routine maintenance of said property and to provide water services pursuant to the District's regulations, which may be amended from time to time.

The undersigned and its successors and assigns covenants and agrees to and with the District, its successors and assigns, that the undersigned is the owner of said property and has good right and authority to sell the same and that it will, and does, hereby warrant and agree to defend the sale of said property to the District, its successors and assigns, against all and every person or persons whomsoever lawfully claiming or to claim the same.

The undersigned further guarantees that the property is fit for purposes intended, i.e., as for use as a water distribution system including distribution and supply lines adequate for the service intended and has been constructed in accordance with the conditions and standards of the District.

The undersigned covenants and agrees with the District to replace, repair and correct any defect in work or materials in respect to the personal property subject to this Bill of Sale arising during a period of one (1) year from date hereof, without cost to the District.

DEVELOPER:_____

By _____

_____
(Print or type name)

Its _____

STATE OF WASHINGTON)
) ss.
COUNTY OF KING)

I certify that I know or have satisfactory evidence that _____ is the person who appeared before me, and said person acknowledged that they signed this instrument, on oath stated that they were authorized to execute the instrument and acknowledged it as the _____ of _____ _____ to be the free and voluntary act for the uses and purposes mentioned in the instrument.

Dated _____

_____
Notary Public in and for the State
of Washington, residing at

_____
My Appointment Expires _____

BILL OF SALE - WATER
ATTACHMENT A

DESCRIPTION OF SYSTEM FOR
DEVELOPER EXTENSION AGREEMENT PROJECT: _____

IN	FROM	TO	SIZE	LENGTH

BILL OF SALE - WATER
ATTACHMENT A

DESCRIPTION OF SYSTEM FOR
DEVELOPER EXTENSION AGREEMENT PROJECT: *Nameof Project*

IN	FROM	TO	SIZE	LENGTH
EXAMPLE(S)				
228TH AVENUE	8" GATE VAVE	45° BEND	8"	200 LF
EASEMENT ROAD	HYDRANT TEE	8" VALVE	12"	50 LF

Identifies size of watermain

Identifies length of watermain between "from and "to"

Examples of "IN" can be ACCESS ROAD, Easement Road, Street Name, Tract X, etc. It is a description of the physical area location the utility is constructed.

Examples of "From & To" are generally generally water feature identifiers such as a valve or a water main fitting (i.e. tee, bend, etc)

BILL OF SALE - SEWER

THE UNDERSIGNED hereby conveys and transfers to Sammamish Plateau Water and Sewer District (the "District"), Sammamish, Washington, the property described on Attachment A:

See Attachment A - Page 2 of 2

This conveyance is made in consideration of the District's agreement to provide routine maintenance of said property and to provide sewer services pursuant to the District's regulations, which may be amended from time to time.

The undersigned and its successors and assigns covenants and agrees to and with the District, its successors and assigns, that the undersigned is the owner of said property and has good right and authority to sell the same and that it will, and does, hereby warrant and agree to defend the sale of said property to the District, its successors and assigns, against all and every person or persons whomsoever lawfully claiming or to claim the same.

The undersigned further guarantees that the property is fit for purposes intended, i.e., as for use as a sewer collection system including collection and transmission lines adequate for the service intended and has been constructed in accordance with the conditions and standards of the District.

The undersigned covenants and agrees with the District to replace, repair and correct any defect in work or materials in respect to the personal property subject to this Bill of Sale arising during a period of one (1) year from date hereof, without cost to the District.

DEVELOPER:_____

By _____

_____
(Print or type name)

Its _____

STATE OF WASHINGTON)
) ss.
COUNTY OF KING)

I certify that I know or have satisfactory evidence that _____ is the person who appeared before me, and said person acknowledged that they signed this instrument, on oath stated that they were authorized to execute the instrument and acknowledged it as the _____ of _____ _____ to be the free and voluntary act for the uses and purposes mentioned in the instrument.

Dated _____

_____
Notary Public in and for the State
of Washington, residing at

_____
My Appointment Expires _____.

BILL OF SALE - SEWER
ATTACHMENT A

DESCRIPTION OF SYSTEM FOR
DEVELOPER EXTENSION AGREEMENT PROJECT: _____

IN	FROM	TO	SIZE	LENGTH

BILL OF SALE - SEWER
ATTACHMENT A

DESCRIPTION OF SYSTEM FOR
DEVELOPER EXTENSION AGREEMENT PROJECT: *Nameof Project*

IN	FROM	TO	SIZE	LENGTH
EXAMPLE(S)				
228TH AVENUE	Exist. SSMH	SSMH#1	8”	200 LF
EASEMENT ROAD	SSMH#1	SSMH#2	8”	50 LF

Identifies size of sewer main

Identifies length of sewer main between “from and “to”

Examples of “IN” can be ACCESS ROAD, Easement Road, Street Name, Tract X, etc. It is a description of the physical area location the utility is constructed.

Examples of “From & To” are generally sewer feature identifiers such as a Manhole Structures

SAMMAMISH PLATEAU
WATER & SEWER DISTRICT
1510 - 228th Ave. S.E.
Sammamish, Washington 98029

MAINTENANCE BOND

STATE OF WASHINGTON)
) SS
COUNTY OF KING)

KNOW ALL MEN BY THESE PRESENTS: That we,_____ as Principal, and _____, a Corporation organized and existing under and by virtue of the laws of _____as surety, are held and firmly bound unto SAMMAMISH PLATEAU WATER & SEWER DISTRICT ("the District"), as obligee in the sum of _____($_____) Dollars, for the payment of which, well and truly to be made, said Principal and surety bind themselves, executors, administrators, successors and assigns, jointly and severally by these present.

WHEREAS, the said Principal has entered into a Developer Extension Agreement with the obligee dated the _____day of _____, _____, for the construction and acceptance of a water line and/or sewer extension for the project known as _____.

NOW, THEREFORE, the condition of this obligation is such that, if the Principal shall maintain and remedy said work free from defects and materials and workmanship as more fully set forth in the Developer Extension Agreement referenced above for a period of two (2) years following completion and acceptance by the District, then this obligations shall be void; otherwise it shall remain in full force and effect.

Signed, sealed and dated this _____ day of _____, _____.

_____
Principal

_____
Authorized Signature:

Mail Address:_____

_____

_____
Surety

Mail Address:_____

_____

_____
Attorney in Fact
[Attach Power of Attorney]

CASH MAINTENANCE AND PLEDGE OF MONIES AGREEMENT

THIS AGREEMENT is made this ____ day of _____, _____ between Sammamish Plateau Water and Sewer District, a municipal corporation ("District"), and _____ ("Developer").

SECTION 1: RECITALS

1.01 The District and the Developer are parties to a _____ (Water/Sewer) Developer Extension Agreement dated the _____ day of _____, _____ ("Extension Agreement"), regarding the construction of certain extension improvements for the project known as _____ ("Project") referenced therein.

1.02 Pursuant to paragraph WS-48, "Maintenance Guarantee", of the Extension Agreement, the Developer is required to furnish the District with a maintenance guarantee to guarantee to correct defects in labor and materials which arise in the extension improvements for a period of two (2) years from the date of acceptance of the extension improvements for the project and transfer of the title to the District. In the event of phasing of the Project, such two (2) years period shall commence on the date of the District's acceptance of the last phase of such Project. Pursuant to such provision, the Developer desires to furnish the District a cash bond in lieu of a corporate surety maintenance bond as the required maintenance guarantee.

1.03 The District will accept, hold and disburse such cash bond as set forth below.

1.04 Therefore, the parties, in consideration of the terms and conditions herein stated, now agree as follows:

SECTION 2: CASH MAINTENANCE BOND

2.01 The Developer shall provide the District cash funds ("Funds") in the amount of U.S. _____ Dollars ($_____) to guarantee the Developer's maintenance of the extension improvements referenced in paragraph 1.02 above.

2.02 The District shall hold and deposit such funds in a non-interest-bearing account in the _____ Bank ("Bank"), such account to be in the sole name of the District.

2.03 The conditions under which the District will disburse or utilize such Funds for the completion of the Developer's obligations under the Extension Agreement are such that:

a. If the extension improvements which are the subject of the Extension Agreement are free from defects in labor and/or materials for a period of two (2) years from the date of acceptance of

the extension improvements and transfer of title to the District or in the event of phasing of the Project, for a two (2) years period from the date of the District's acceptance of the last phase of such Project, the District shall disburse the funds less charges for District administrative and other costs referenced in this Agreement, to the Developer within thirty (30) days of such determination by the District; or

b. If the extension improvements which are the subject of the Extension Agreement are not free from defects in labor and/or materials for a period of two (2) years from the date of acceptance of the extension improvements and transfer of title to the District or in the event of phasing of the Project, for a two (2) years period from the date of the District's acceptance of the last phase of such Project, and the Developer has failed to remedy to the District's satisfaction any such defects within fifteen (15) days of notice from the District to correct such defect, the District shall have the right to use the Funds to correct such defect to the District's satisfaction and specifications referenced in the Extension Agreement; in such event, the District shall return any unused Funds thereon to the Developer within thirty (30) days of the end of the time period referenced in 2.03(a) above.

SECTION 3: PLEDGE AND SECURITY AGREEMENT

3.01 Developer hereby grants to the District, its successors and assigns, a security interest in the Funds, which Funds will be delivered to the District and placed in the District's possession and control. Developer further grants to the District a security interest in all proceeds of the Funds, whether in the form of profits, dividends, accrued interest or otherwise.

3.02 For purposes of the security interest granted herein, Bank shall be the agent of the District for possession of the Funds such that possession of the Funds by Bank shall be deemed to be possession of the Funds by the District.

3.03 Developer warrants that, except as provided for herein, Developer has full title to the Funds and the Funds are free and clear of any other security interest, encumbrance, or claim of right, title or ownership. Developer will not create or permit the existence of any lien or security interest other than that hereby created in the Funds without the express written consent of the District nor shall Developer assign any interest in the Funds without said written consent.

3.04 Developer agrees to repay to the District all sums which the District may expend or incur in conserving or protecting the Funds, or in enforcing its security interest herein, including without limitation such sums as my be charged by Bank or any governmental entity with respect to the Funds. The sums agreed to be paid herein shall be secured by this Agreement.

3.05 The District shall have the right to enforce and collect on its security interest in the Funds in accordance with the terms and provisions contained in this Agreement. Enforcement and collection of the District's security interest in the Funds shall be in addition to all other rights and remedies granted by law, equity or contract to the District to seek reimbursement of additional damages incurred and/or to enforce the provisions of the Extension Agreement and this Agreement, should the Funds be insufficient to discharge the Developer's obligations to the District.

SECTION 4: GENERAL PROVISIONS

4.01 This agreement shall serve as an addendum to the Extension Agreement and shall supersede and amend such Extension Agreement to the extent provided herein.

4.02 All time limits set forth herein are of the essence. All parties agree to perform all obligations under this Agreement with due diligence.

4.03 In the event that this Agreement or any obligation secured by it is referred to an attorney for protecting or defending the priority of the District's interest in the Funds, or for collection or realization procedures, Developer agrees to pay a reasonable attorney's fee, including fees incurred in both trial and appellate courts or fees incurred without suit, and all court costs and costs of the public officials. The sums agreed to be paid herein shall be secured by this Agreement.

4.04 The District will cause to be performed certain services by its legal counsel, engineers and District personnel to carry out the foregoing purposes, including but not limited to the preparation and administration of this and any related agreements and documents. The Developer agrees to pay the cost of such services as a condition of the District's agreement herein.

SAMMAMISH PLATEAU WATER AND SEWER DISTRICT ("District)	_____ _____ ("Developer")
By _____ Its _____	By _____ Its _____

_____ BANK hereby consents and agrees that it is the agent of SAMMAMISH PLATEAU WATER AND SEWER DISTRICT ("District") for purposes of possession by Sammamish Plateau Water and Sewer District of cash funds in the amount of _____ ($_____), which funds the District has a security interest in pursuant to this Agreement and pursuant to RCW 62A.9-304.
DATED this _____ day of _____, _____.

_____BANK ("BANK"),
_____Branch
By_____
Its_____

STATE OF WASHINGTON)
)ss.
COUNTY OF KING)

I certify that I know or have satisfactory evidence that _____ is the person who appeared before me, and said person acknowledged that _____ signed this instrument, on oath stated that _____ was authorized to execute the instrument and acknowledged it as the _____ of _____ to be the free and voluntary act of such corporation for the uses and purposes mentioned in the instrument.

Dated _____

_____

Notary Public in and for the State of Washington, residing at

_____

My Appointment Expires:_____

STATE OF WASHINGTON)
)ss.
COUNTY OF KING)

I certify that I know or have satisfactory evidence that _____ is the person who appeared before me, and said person acknowledged that _____ signed this instrument, on oath stated that _____ was authorized to execute the instrument and acknowledged it as the _____ of _____ to be the free and voluntary act of such corporation for the uses and purposes mentioned in the instrument.

Dated _____

_____

Notary Public in and for the State of Washington, residing at

_____

My Appointment Expires:_____

STATE OF WASHINGTON)
)ss.
COUNTY OF KING)

I certify that I know or have satisfactory evidence that _____ is the person who appeared before me, and said person acknowledged that _____ signed this instrument, on oath stated that _____ was authorized to execute the instrument and acknowledged it as the _____ of SAMMAMISH PLATEAU WATER AND SEWER DISTRICT to be the free and voluntary act of such corporation for the uses and purposes mentioned in the instrument.

Dated _____

_____

Notary Public in and for the State of Washington, residing at

_____

My Appointment Expires:_____

SAMMAMISH PLATEAU WATER AND SEWER DISTRICT

AGREEMENT FOR WATER/SEWER FACILITIES SYSTEM USE
PRIOR TO FINAL ASPHALT LIFT

The undersigned _____ ("Developer") hereby applies to Sammamish Plateau Water and Sewer District ("District") for water and/or sewer service prior to the placement of the final asphalt lift and full completion of the water and/or sewer extensions included in the Developer Extension Agreement for the Project known as _____ executed by the Developer and granted final acceptance by the District on the _____ day of _____, _____ ("Extension Agreement").

In consideration of the District allowing the Developer to use the water and/or sewer extensions prior to full completion of the water and/or sewer extensions, including the placement of the final asphalt lift within the Project site, the Developer agrees to pay the District for its services related to administration and inspection of water and/or sewer facilities installed as part of the Extension Agreement. The District will invoice the Developer periodically as actual District expenses are incurred, on a time-and-materials basis including overhead.

In addition, the Developer agrees to pay the following deposits to the District at the time of the execution of this agreement ("Agreement") to guarantee that all water and sewer facilities constructed as part of the Extension Agreement are raised, adjusted, and/or installed in accordance with District requirements following placement of the final asphalt lift. These funds may be refunded upon the completion of the water and/or sewer extensions by the Developer, or utilized by the District to complete such work as further provided herein.

Facilities Completion Deposit:

Manholes	(# to be raised)	_____	at $500/each =	$_____
Cleanouts	(# to be raised)	_____	at $100/each =	$_____
Valve Boxes	(# to be raised)	_____	at $250/each =	$_____
Meter Boxes & Stripes	(# to be installed)	_____	at $50/meter box =	$_____
Air Relief Valves	(# to be installed)	_____	at $100/valve =	$_____
Valve Marker Posts	(# to be installed)	_____	at $100/post =	$_____
Hydrants w/ Blue Reflectors	(# to be painted/Cole numbers)	_____	at $125/each =	$_____
Type I Blowoff	(# to be painted/Cole numbers)	_____	at $100/each =	$_____
Type 2 Blowoff:	(# to be adjusted)	_____	at $200 /each =	$_____

Facilities Completion Refundable Total $_____

The Developer shall notify the District's Developer Extension Coordinator **in writing** of Developer's proposed final asphalt lift schedule no sooner than ninety-six (96) hours and no later than seventy-two (72) hours before the proposed commencement of the final asphalt lift. Developer shall obtain the District's approval of the proposed final lift schedule before commencing such work. District approval of the schedule for the proposed final lift shall identify a date after which the final lift work may commence and a deadline for the completion of such work. **No placement of the final asphalt lift shall occur until the District has inspected the area of the proposed final lift and the water and sewer extensions in such area.** Following the District's inspection of the proposed final lift area, District shall have the right to require the Developer to correct any deficiencies in the water and sewer extensions and/or pavement deficiencies, and such corrections shall be performed by the Developer, **with District inspection personnel present**, to the District's satisfaction prior to any placement of the final lift. The District will notify the land use agency in writing when the area of the proposed final lift is acceptable to the District for placement of final lift.

Following the placement of the final asphalt lift, District shall conduct an inspection of the water and sewer extension work in the area of the final asphalt lift and shall provide to the Developer a punchlist of any deficiencies identified and corrections in the extension work required by the District. The Developer shall notify the District and start work to remedy such deficiencies within seven (7) days of receipt of the punchlist and shall complete such work within thirty (30) days of beginning corrective work. If the Developer fails to complete the work within this time period, the District will notify the Developer that the work has not been completed, and give the Developer seven (7) more days to complete the work. If the work is not completed within the seven (7) day extension, the District shall have the right to hire a contractor to complete the work, and the costs shall be deducted from the Facilities Completion funds deposited with the District.

In addition to the fees and charges identified in this Agreement, all paperwork, fees, charges, agreements and other requirements of the Extension Agreement shall be completed, satisfied, and/or paid prior to the District allowing service to the Real Property which is the subject of the Extension Agreement.

Agreed To:	_____	Date:	_____
	(Company Name)		
Address:	_____		
	_____		
Telephone:	_____	Accepted by	
By:	_____	District:	_____
	(Signature)		(Signature)
Printed Name:	_____	Printed Name:	_____
Title:	_____	Title:	_____

WATER FINAL COST SUMMARY

PROJECT: **$0.00**

DEVELOPER: **$0.00**

CONTRACTOR: **$0.00**

DATE: **1/0/1900**

DESCRIPTION	UNIT PRICE	ACTUAL QUANTITY	UNIT	ACTUAL PRICE
WATER MAINS				
24-inch	-	-	LF	-
16-inch	-	-	LF	-
12-inch	-	-	LF	-
8-inch	-	-	LF	-
4-inch	-	-	LF	-
SINGLE SERVICES				
(3/4-inch)	-	-	EA	-
(1-inch)	-	-	EA	-
DOUBLE WATER SERVICES				
(3/4-inch)	-	-	EA	-
(1-inch)	-	-	EA	-
IRRIGATION SERVICES				
(3/4-inch)	-	-	EA	-
(1-inch)	-	-	EA	-
VALVES (by size)				
24-inch Butterfly Valve	-	-	EA	-
16-inch Butterfly Valve	-	-	EA	-
12-inch Butterfly Valve	-	-	EA	-
12-inch Gate Valve	-	-	EA	-
8-inch Gate Valve	-	-	EA	-
4-inch Gate Valve	-	-	EA	-
WET TAP ASSEMBLY ___" x ___ "	-	-	EA	-
AIR/VACUUM RELEASE ASSEMBLIES				
1-inch	-	-	EA	-
2-inch	-	-	EA	-
BLOWOFFS				
Type I	-	-	EA	-
Type II	-	-	EA	-
FIRE HYDRANTS (includes valve and pipe to main)	-	-	EA	-
PRESSURE REDUCING VALVES	-	-	LS	-
Miscellaneous (describe)				
	-	-	-	-
	-	-	-	-
	-	-	-	-
	-	-	-	-

WATER SYSTEM SUBTOTAL $0.00

WASHINGTON STATE SALES TAX: 9.50% $0.00

WATER SYSTEM CONSTRUCTION SUBTOTAL W/ TAX $0.00

NON-TAX ITEMS				
District Design/Inspection Fees	-	1	LS	-
Engineering	-	1	LS	-
Surveying	-	1	LS	-
Soils Testing	-	1	LS	-
	-	-	LS	-
	-	-	LS	-

NON-TAX ITEMS SUBTOTAL $0.00

WATER SYSTEM PROJECT TOTAL $0.00

District Project Manager _____
signature date

Engineering Project Manager _____
signature date

SEWER FINAL COST SUMMARY

PROJECT: **< insert project name here >**

DEVELOPER: **< insert Developer name here >**

CONTRACTOR: **< insert Contractor name here >**

DATE: **< insert date here >**

DESCRIPTION	UNIT PRICE	ACTUAL QUANTITY	UNIT	ACTUAL PRICE
SEWER MAINS				
8-inch PVC Sewer Main	-	-	LF	-
10-inch PVC Sewer Main	-	-	LF	-
8-inch DI Sewer Main	-	-	LF	-
10-inch DI Sewer Main	-	-	LF	-
2-inch Sewer Force Main	-	0	LF	-
SINGLE SIDE SEWERS	-	0	EA	-
DOUBLE SIDE SEWERS	-	0	EA	-
MANHOLES				
48-inch	-	0	EA	-
72-inch	-	0	EA	-
GRINDER PUMPS	-	-	EA	-
LIFT STATIONS	-	-	EA	-
AIR/VACUUM RELEASE ASSEMBLIES	-	-	EA	-
MISCELLANEOUS (describe)				
Cleanout	-	-	EA	-
Collection Valve Box	-	-	EA	-
-	-	-	0	-

SEWER SYSTEM SUBTOTAL $0.00

WASHINGTON STATE SALES TAX: 8.80% $0.00

SEWER SYSTEM CONSTRUCTION SUBTOTAL W/ TAX $0.00

NON-TAX ITEMS				
District Design/Inspection Fees	-	-	LS	-
Engineering	-	-	LS	-
Surveying	-	-	LS	-
Soils Testing	-	-	LS	-
	-	-	LS	-
	-	-	LS	-

NON-TAX ITEMS SUBTOTAL $0.00

SEWER SYSTEM PROJECT TOTAL $0.00

BACKFLOW PREVENTION ASSEMBLY TEST REPORT

Sammamish Plateau Water

1510 228th Avenue SE
Sammamish, WA 98075
Main: 425.392.6256
Fax: 425.391.5389
www.spwater.org

INSTALL ID:_____**ACCOUNT #:**_____

NAME OF PREMISE: _____ **Commercial** ☐ **Residential** ☐

SERVICE ADDRESS: _____**CITY:**_____**ZIP:**_____

CONTACT PERSON: _____**PHONE:**_____**FAX:**_____

LOCATION OF ASSEMBLY: _____

DOWNSTREAM PROCESS: _____ **DCVA** ☐ **RPBA** ☐ **PVBA** ☐ **OTHER:**_____

NEW INSTALLATION ☐ **EXISTING** ☐ **REPLACEMENT** ☐ **OLD SER.#:**_____ **Proper Installation? Yes** ☐ **No** ☐

MAKE OF ASSEMBLY:_____ **MODEL:**_____ **SERIAL NO.:**_____ **SIZE:** _____

INITIAL TEST	**DCVA/RPBA CHECK VALVE NO. 1**	**DCVA/RPBA CHECK VALVE NO. 2**	**RPBA**	**PVBA**
PASSED ☐ **FAILED** ☐	LEAKED ☐ _____PSID	LEAKED ☐ _____PSID	OPENED AT _____PSID #1 CHECK _____PSID AIR GAP OK? _____	AIR INLET OPENED AT _____PSID DID NOT OPEN ☐
NEW PARTS AND REPAIRS	CLEAN REPLACE PART ☐ ☐ ☐ ☐ ☐ ☐ ☐ ☐	CLEAN REPLACE PART ☐ ☐ ☐ ☐ ☐ ☐ ☐ ☐	CLEAN REPLACE PART ☐ ☐ ☐ ☐ ☐ ☐ ☐ ☐	CHECK VALVE HELD AT _____PSID LEAKED ☐ _____ CLEANED ☐ REPAIRED ☐
TEST AFTER REPAIRS	_____PSID	_____PSID	OPENED AT _____PSID #1 CHECK _____PSID	AIR INLET _____PSID CHK VALVE ____PSID

AIR GAP INSPECTION: Required minimum air gap separation provided? Yes ☐ No ☐ **Detector Meter Reading**_____

REMARKS:_____**LINE PRESSURE**_____**PSI**_____

_____**CONFINED SPACE?**_____

TESTER'S SIGNATURE_____**CERT.NO.**_____ **DATE**_____

TESTER'S NAME PRINTED_____**TESTERS PHONE # ( ).**_____

REPAIRED BY_____**CERT.NO.**_____ **DATE**_____

FINAL TEST BY_____**CERT.NO.**_____ **DATE**_____

Gauge #_____ Model _____Make _____

GAGE CALIBRATION DATE _____/_____/_____ **WATER SERVICE RESTORED Yes** ☐ **No** ☐

Sammamish Plateau Water 1510- 228th Ave. SE, Sammamish, WA 98075
Phone: (425) 392-6256 Fax: (425) 391-5389

Submit test reports to: crossconnection@spwater.org

I certify that this report is accurate, and I have used WAC 246-290-490 approved test methods and test equipment.

REIMBURSEMENT AGREEMENT FOR WATER/SEWER FACILITIES

Waiver/Application Form

Explanation of Process

Reimbursement Agreement

SAMMAMISH PLATEAU WATER AND SEWER DISTRICT

APPLICATION FOR OR WAIVER OF
REIMBURSEMENT AGREEMENT FOR WATER/SEWER FACILITIES

The undersigned _____ ("Applicant") hereby: (initial only one box)

- ❑ Acknowledges that the water and/or sewer facilities constructed pursuant to the developer extension agreement executed by the applicant and the Sammamish Plateau Water and Sewer District on the _____ day of _____, _____ ("D.E. Agreement") are not eligible for reimbursement pursuant to Chapter 57.22 RCW or as amended.

- ❑ Irrevocably waives the right to apply for or receive reimbursement pursuant to Chapter 57.22 RCW or as amended for the water and/or sewer facilities constructed pursuant to the developer extension agreement executed by the applicant and the Sammamish Plateau Water and Sewer District on the _____ day of _____, _____ ("D.E. Agreement").

- ❑ Applies to Sammamish Plateau Water and Sewer District for a Reimbursement Agreement pursuant to the developer extension agreement executed by applicant in District on the _____ day of _____, _____ ("D.E. Agreement").

THIS DOCUMENT, TOGETHER WITH THE INFORMATION LISTED IN **STEP 6** OF THE PROCESS INCLUDED AS ATTACHMENT A, MUST BE SUBMITTED TO THE DISTRICT NO LATER THAN THE PREDESIGN MEETING FOR THE ABOVE-REFERENCED D.E. AGREEMENT. THE DESIGN DRAWINGS WILL NOT BE REVIEWED BY THE DISTRICT UNTIL THE REQUIRED INFORMATION IS REVIEWED AND APPROVED FOR PROCESSING BY THE DISTRICT.

THE EXECUTED, NOTARIZED REIMBURSEMENT AGREEMENT AND ALL SUPPORTING DOCUMENTATION MUST BE SUBMITTED TO THE DISTRICT PRIOR TO THE DISTRICT'S ACCEPTANCE OF THE EXTENSION FACILITIES. THE DEVELOPER MUST RESPOND WITHIN TWENTY-ONE (21) DAYS TO THE DISTRICT'S REQUEST(S) FOR ADDITIONAL INFORMATION OR REVISIONS TO THE REIMBURSEMENT AGREEMENT.

FAILURE TO COMPLY WITH THESE REQUIREMENTS WILL RESULT IN FORFEITURE OF THE DEVELOPER'S RIGHT TO A REIMBURSEMENT AGREEMENT UNDER CHAPTER 57.22 RCW.

Name of Applicant: _____

Name of Project: _____ (per District Resolution)

Description of Project or Project Portion for which reimbursement is requested: _____

_____

_____

Developer shall be responsible for all District labor including overhead and direct expenses associated with engineering review, legal services, administration, setup, mailing, public notification, public hearings and meetings, and recording of the Reimbursement Agreement. The District will provide the Developer with periodic invoices of the District's expenses. Payment for District services is due within 30 days of the date of the invoice. Failure to pay invoices by the due date will result in suspension of all District activities on the Reimbursement Agreement until the invoices are paid in full. Some expenses will be incurred following approval of the Reimbursement Agreement by the District's Board of Commissioners. These expenses include, but are not limited to, District labor, certified mailing costs, and recording fees from King County. No reimbursement payments will be made to the Developer until all District invoices are paid in full.

APPLICANT:

Date: _____

_____
(Signature)

Printed Name: _____

Title: _____

Company Name: _____

Address: _____

_____

Telephone: _____

ATTACHMENT A
DISTRICT REIMBURSEMENT AGREEMENT PROCESS
FOR WATER/SEWER FACILITIES

Pursuant to District Resolution No.**4334**, the procedure for processing reimbursement agreements under a Developer Extension Agreement is as follows:

1. Developer enters into Developer Extension Agreement.
2. Developer meets with District staff in predesign meeting to discuss the proposed design, including any offsite water/sewer facilities, facilities within the project that can provide direct service to other properties, or facilities such as lift stations or booster pump stations that serve a larger area than just the Developer's property.
3. Developer submits signed application/waiver form for reimbursement agreement (required for **ALL** Developer Extension Agreements) no later than the time of the predesign meeting.
4. If the Developer is entering into a reimbursement agreement, the Developer will pay all District expenses on a time-and-materials basis, including labor and overhead, for District services associated with the review, dissemination, adoption, and recording of the reimbursement agreement. Payment for District services is due within 30 days of the date of the invoice. Failure to pay invoices by the due date will result in suspension of all District activities on the Reimbursement Agreement until the invoices are paid in full. No reimbursement payments will be made to the Developer until the invoices are paid in full.
5. Developer prepares design and submits to District.
6. If Developer is applying for a reimbursement agreement, the Developer shall submit the following, and District staff will not review plans until the required submittals have been received in a form acceptable to the District.
   - A map of the reimbursement area: a plan (up to 11"x17" size) showing the facilities to be constructed and tax lots affected by reimbursement agreement;
   - Electronic database containing properties within the proposed reimbursement area (tax lot number, property owner name and mailing address, property owner telephone number);
   - Mailing labels for the property owners of record;
   - Estimated total costs of the water and/or sewer improvements, prepared by a qualified licensed professional engineer, including an estimate of all costs proposed to be included (such as engineering, surveying, testing, landscape restoration, paving, reimbursement agreement administration costs, etc.);
   - Proposed methodology for calculating the pro rata reimbursement charges for each property; and the estimated reimbursement charge to be assessed for each of the parcels in the proposed reimbursement area.
7. District mails notification to each of the owners of real property within the reimbursement area (by certified mail, copy received and by regular U.S. Mail) regarding the estimated proposed reimbursement charge for the proposed reimbursement area. The letter contains an explanation of the methodology proposed to be used, a map showing the real property and the water and/or sewer facilities being installed, the conditions under which the property owners would be required to pay the assessed fees, and the time period for reimbursement.
8. Developer completes the design, which is approved by the District, and the Developer constructs the project.
9. Following District acceptance of the project construction and before the District issues Final Acceptance of the DEA, the Developer submits the following:

- Reimbursement Agreement that has been completed, signed and notarized, including all exhibits. The date on the first page of the Reimbursement Agreement as submitted is the date from which the 15 year term of the Reimbursement Agreement will run.
- Revisions to property owner information for real property to be subject to reimbursement.
- Backup invoices of actual costs incurred

10. Developer receives Final Acceptance for project (resolution from Board)
11. District staff reviews Reimbursement Agreement.
    A. If District staff determines the Reimbursement Agreement and its exhibits are in a form acceptable to the District the Reimbursement Agreement Process continues to the next step.
    B. If District staff finds corrections to the reimbursement agreement or exhibits are required
        i. The Reimbursement Agreement will be returned to the Developer for correction.
        ii. The Developer will have 21 calendar days to resubmit a corrected Reimbursement Agreement.
        iii. If the corrections are not resubmitted to the District within the 21 calendar days, the Developer's Application for Reimbursement Agreement becomes null and void.
        iv. District staff reviews revisions and repeats this step.
12. District staff mails notification to each of the owners of real property within the reimbursement area (by certified mail, copy received and by regular U.S. Mail) regarding the final proposed reimbursement charge for the proposed reimbursement area. The letter contains an explanation of the methodology used, the statutes regarding reimbursement agreements, the conditions under which the property owners would be required to pay the assessed fees, the time period for reimbursement, and how and when the property owners can review the cost information and project data at the District. Property owners are informed to submit comments to the District by a certain date (within 3 weeks) and that the Board of Commissioners will consider the reimbursement agreement at the next regularly scheduled Board meeting following the 3 week period.
13. Following the 3 week comment period, District staff schedules the proposed reimbursement agreement for the next regularly-scheduled Board meeting
14. The Board reviews the proposed reimbursement agreement, together with any comments received by the affected property owners.
    A. If the Board approves the reimbursement agreement, by Resolution, the Reimbursement Agreement Process continues to the next step.
    B. If the Board does not approve the reimbursement agreement in the form proposed, District staff will return the reimbursement agreement to the Developer for modification or correction and repeats step 10 above.
    C. If the Board determines that a reimbursement agreement is not allowable for this development and the facilities included, the reimbursement agreement application will be denied and District staff will mails notification to each of the owners of real property within the proposed reimbursement area (by certified mail, copy received and by regular U.S. Mail) informing them that the reimbursement agreement will not be recorded. The developer will be notified by District staff of the Board's finding and the reimbursement agreement process ends.
15. District staff mails notification to each of the owners of real property within the reimbursement area (by certified mail, copy received and by regular U.S. Mail) informing them that the reimbursement charge will be imposed and the reimbursement agreement will be recorded against their property.

16. District staff submits reimbursement agreement to King County for recording.
17. District staff receives the recorded reimbursement agreement from King County and puts it in the reimbursement agreement notebook
18. As properties included in the reimbursement area submit requests for water/sewer service, District staff will determine if a reimbursement amount is owed. If a reimbursement amount is owing, the District will collect this reimbursement amount as part of the property service connection charges. The District will then process payment to the developer, pursuant to the terms of the reimbursement agreement, of the reimbursement amount collected less a District administration fee of $150 per reimbursement charge collected.
19. **Developer must submit to the District updated contact information every two years plus sixty (60) days, even if there is no change to the contact information,** with the two year date measured from the date on the first page of the reimbursement agreement.
    A. If the Developer submits the required updated contact information every two years plus sixty (60) days, as required, the District will update the developers contact information and any reimbursement amounts collected by the District pursuant to the approved reimbursement agreement will be paid to the developer in accordance with the reimbursement agreement.
    B. If the Developer has not submitted the required updated contact information every two years plus sixty (60) days, as required, and if the District collects reimbursement charges from owners of Benefited Property, the District will then attempt to contact the developer by mail at the contact location most recently provided by the developer, and request the developer confirm and/or update their contact information within 60 days from the date the inquiry is sent, so the District can continue to process the reimbursement agreement.
        i. If the developer responds to the request for updated contact information within the 60-day period, the District will incorporate the updated information and any reimbursement amounts collected by the District pursuant to the approved reimbursement agreement will be paid to the developer in accordance with the reimbursement agreement.
        ii. If the developer does not respond to the request for updated contact information within the 60-day period, **the right of the developer to receive reimbursement amounts collected by the District shall be terminated** and any amounts collected by the District pursuant to the approved reimbursement agreement shall be retained by the District.
20. When the Reimbursement Agreement reaches its expiration date, fifteen years after the date on the first page of the Reimbursement Agreement, the Reimbursement Agreement shall expire. Any properties that were subject to the Reimbursement Agreement, and that did not connect to the Reimbursement Facilities during the term of the Reimbursement Agreement, but which are connected to the Reimbursement Facilities following expiration of the Reimbursement Agreement shall pay a local facility charge to the District pursuant to District rules and regulations in effect at the time of application for such connection. The local facility charge shall be based on District rates in effect at the time of application for such connection and not at the rate established through the Reimbursement Agreement.

SAMMAMISH PLATEAU WATER & SEWER DISTRICT
REIMBURSEMENT AGREEMENT

THIS AGREEMENT ("Agreement") is made and entered into this _____ day of _____, _____, ("Effective Date") between the Sammamish Plateau Water & Sewer District, a municipal corporation ("District") and _____ ("Developer").

R E C I T A L S:

A. District is a duly organized water and sewer district under the laws of the State of Washington, and is empowered to furnish both water and sewer service, to property owners within or without the District in the manner provided by law; and

B. Developer previously entered into a Developer Extension Agreement ("DEA") dated the _____ day of _____, _____, for the construction and installation of water and/or sewer extensions to serve Developer's property which is described on Exhibit "A" attached hereto; Developer completed installation of such extensions in accordance with the terms of the DEA, portions of which make utility service available to real property other than the Developer's property within (and without) the District hereinafter known as the benefited properties ("Benefited Properties"), described on Exhibit "B" attached hereto; the owners of such Benefited Properties have not contributed to the cost of the extensions ("Extension Facilities") installed by Developer; and Developer is entitled to reimbursement from real property owners seeking connection to or use of such Extension Facilities for the cost of such Extension Facilities in excess of Developer's pro rata share therefor which costs have been determined as set forth below; and

C. District will collect charges from the owners of Benefited Properties within (and without) the District connecting to or using the Extension Facilities; and such charges are the sole source of funds for the District from which reimbursement to Developer can and will be made, as and when the same are collected; and

D. District is authorized to enter into a reimbursement agreement with Developer under the provisions of Chapter 57.22 RCW; and the parties desire to enter into a written reimbursement agreement ("Agreement") with reference to the foregoing matter, now, therefore,

IN CONSIDERATION of the following terms and conditions, the District and the Developer agree as follows:

1. Records/Costs. After completion of the construction of the Extension Facilities, Developer will certify to the District the final design, engineering, construction and restoration costs incurred by Developer in constructing the Extension Facilities and submit such supporting vouchers, invoices and other data as the District may require to substantiate the certified costs. The executed, notarized Agreement, all exhibits, and all supporting documentation must be submitted to the District before the Extension Facilities will be accepted by the District. Any changes or additional information requested by the District must be submitted to the District within 21 days of District notification to the Developer. District reserves the right to approve or reject the certified costs as reasonable and subject to reimbursement. The District shall allocate the cost of the Extension Facilities among Developer's property and the Benefited Properties on a pro rata share basis. However, the District reserves the right to allocate such costs in any manner conforming with applicable law and the policies of the District.

2. Charges. District shall require owner(s) of the Benefited Property to pay a reimbursement charge determined in accordance with the terms of this Agreement. The reimbursement charge shall be payable in total at the time of such owner's connection to or use of the Extension Facilities. The amount of such reimbursement charge to be collected prior to such connection is set forth on Exhibit "C" attached hereto; such charges may include, but are not limited to, pro rata share of District legal, engineering, administrative, set-up, handling and actual costs of the Extension Facilities. Such reimbursement charges shall be in addition to all other District charges in effect at the time of seeking connection to such Extension Facilities. Upon application by Benefited Property owners, the District may further segregate reimbursement charges attributed to property connecting to the Extension Facilities. All costs of such segregation shall be borne by the party requesting such segregation.

3. Developer Charge. The District shall deduct the sum of $150.00 ("Developer Charge") for each reimbursement payment received before the Developer shall be entitled to receive the balance of such payment. Such base fee and charges herein described shall be collected by the District for costs and expenses incurred in connection with the administration of this Agreement.

4. Recording, Liens. This Agreement shall be recorded in the office of the King County Auditor, King County, Washington, upon execution by the District and the Developer. Such Agreement shall constitute a lien and record notice upon the property described in Exhibit "B" not contributing to the original cost of the Extension Facilities installed by Developer under the provisions hereof and shall be binding upon the present owner thereof, and all successors and assigns to those respective parties in accordance with Chapter 57.22 RCW. When paid by any party seeking connection to the Extension Facilities, the lien shall be satisfied and discharged of record. Developer hereby appoints the Secretary of the Board of Commissioners, or his/her successor, as its attorney-in-fact, to prepare, execute and file for record with the King County Recorder a document appropriate to cancel and release the lien, charge or obligation of the Benefited Property owner paying the reimbursement amount to District, which will describe with particularity the property so connecting and paying the reimbursement amount, and thereupon this agreement shall no longer apply to such property. This appointment as attorney-in-fact is irrevocable during the existence of this Agreement.

5. Developer Contact Information: The Developer shall provide the District with contact information ("Contact Location"). The initial Contact Location shall be provided as follows:

Contact Information and Address for Receipt of Reimbursement Funds

_____
(Printed Name of Developer's Representative)

_____
(Company Name)

_____
(Mailing Address)

_____
(City, State, Zip code)

_____
(Telephone/FAX)

The Developer shall inform the District, in writing, of their current Contact Location every two years plus sixty (60) days from the Effective Date ("Contact Update Dates"), or sooner of company name, address, or telephone number for the receipt of reimbursement funds.

If the Developer fails to submit their current Contact Location to the District at least every two years plus sixty (60) days from the Contact Update Dates noted above the District may terminate the right of the Developer to receive any reimbursement charges collected by the District after such Contact Update Date as described in Section 7 of this Agreement.

The notification of current Developer Contact Location shall be sent to the District at the following address, unless the District provides written notification to Developer of a change in District address as follows.

District Contact Information

General Manager
Sammamish Plateau Water and Sewer District
1510 – 228th Avenue SE
Sammamish, WA 98075
(425) 392-6256

6. Payment Procedure. The District will pay any reimbursement charges collected to Developer, less the Developer Charge, within sixty (60) days following receipt thereof, District to follow its established procedures of depositing such funds received with the King County Treasurer and drawing upon the same and making payment by King County Treasurer warrant in the manner provided by law. The District shall forward reimbursement funds referenced herein to Developer at the address provided by the Developer as their Contact Location.

As a condition of receiving such reimbursement funds, Developer shall execute a receipt to the District for such reimbursement amounts so paid upon the receipt form provided by District. Such form shall include the name of the Benefiting Property owner making payment of such amount to the District and the legal description of the Benefited Property connecting to the Extension Facilities.

In the event of a dispute as to the rightful party to receive such funds, the District may pay the same to the Developer referenced herein or interplead such funds to the court; in either event, District shall thereupon be relieved of any further obligation or of liability hereunder as to such reimbursement funds so paid.

7. Termination of Developer's Right to Receive Reimbursement. In the event the District collects reimbursement charges from owners of Benefited Property and the Developer has failed to comply with the requirements of Section 5 of this Agreement, the District will attempt to contact the Developer by mail at their most recent Contact Location and request the Developer provide, within 60 days from the date of mailing of the request, written confirmation and update of their current Contact Location. If the Developer fails to submit an Updated Contact Location within the 60-day period, the right of the Developer to receive reimbursement charges collected by the District shall terminate, and any reimbursement charges collected by the District following the Contact Update Date shall be collected and retained by the District and deposited in the District's capital fund for expenditure by the District.

8. Term. This Agreement shall remain effective for a period of fifteen (15) years from the date set forth on page one (1) of this Agreement as to any Benefited Property for which a connection application is submitted to the District during such fifteen (15) year term. Developer shall have no further claim as to monies collected from any Benefited Properties after the expiration of the fifteen (15) year term.

9. Agreement Implementation. The District will use its best efforts to collect and distribute the reimbursement funds pursuant to the process set forth in this Agreement. However, the District, its officials, employees or agents shall not be held liable or responsible for failure to implement any of the provisions of this Agreement unless such failure is willful or intentional.

10. General. All exhibits referred to herein are by this reference made a part hereof as though set forth in full. This Agreement is binding upon the heirs, executors, administrators, successors and assigns, of each of the parties hereto.

11. Assignment. The Developer shall not assign its rights and obligations under this Agreement without the prior written consent of the District. In the event of an assignment, such person or entity shall be referred to as the "Developer" or "Developer's Assigns".

12. Effective Date. This Agreement shall be effective upon the date set forth on page one (1) of this Agreement ("Effective Date").

SAMMAMISH PLATEAU WATER & SEWER DISTRICT ("District")	_____ ("Developer")
By _____	By _____
Its _____	Its _____

STATE OF WASHINGTON)
) ss.
COUNTY OF KING)

I certify that I know or have satisfactory evidence that _____ is the person who appeared before me, and said person acknowledged that they signed this instrument, on oath stated that they were authorized to execute the instrument and acknowledged it as the _____ of _____ _____ to be the free and voluntary act of such corporation for the uses and purposes mentioned in the instrument.

Dated _____

_____
Notary Public in and for the State of Washington,
residing at

_____
My Appointment Expires _____

STATE OF WASHINGTON)
) ss.
COUNTY OF KING)

I certify that I know or have satisfactory evidence that _____ is the person who appeared before me, and said person acknowledged that they signed this instrument, on oath stated that they were authorized to execute the instrument and acknowledged it as the _____ of Sammamish Plateau Water and Sewer District to be the free and voluntary act of such corporation for the uses and purposes mentioned in the instrument.

Dated _____

_____
Notary Public in and for the State of Washington,
residing at

_____
My Appointment Expires _____

EXHIBIT A
LEGAL DESCRIPTION OF DEVELOPER'S PROPERTY

EXHIBIT B
LEGAL DESCRIPTION OF BENEFITED PROPERTY(IES)

EXHIBIT C
DESCRIPTION OF REIMBURSEMENT

PART FOUR - DISTRICT STANDARD DETAILS AND NOTES

The "***District Technical Specifications***" contain the District's Standard Details in 8-1/2" x 11" format. The District's Standard Details are also shown on the District Standard Detail Drawings (22" x 34" format).

Sammamish Plateau Water®

DISTRICT TECHNICAL SPECIFICATIONS

OWNER

Sammamish Plateau Water and Sewer District

1510 - 228th Avenue SE

Sammamish, Washington 98075

(425) 392-6256 FAX (425) 391-5389

Revised October 2017

TECHNICAL SPECIFICATIONS

TABLE OF CONTENTS

PART ONE - DESIGN STANDARDS 1-1

SECTION 1.1 - WATER SYSTEMS 1-1

A. Watermain Extension 1-1
B. Main Location 1-1
C. Easements 1-1
D. Location of Line within Street Corridor 1-1
E. Water Line Cover 1-2
F. Separation Between Other Utilities 1-2
G. Line Size 1-2
H. Pipe Material 1-2
I. Dead-end Water Lines 1-2
J. Blocking on End of Mains 1-2
K. Connection to Existing Mains 1-2
L. Fitting Material 1-3
M. Multiple Fitting 1-3
N. Lines Entering/Exiting Structures 1-3
O. Pipe Anchors 1-3
P. Hill Holders 1-3
Q. Fire Hydrant Location 1-3
R. Fire Hydrant Line Size 1-3
S. Hydrant Guard Posts 1-3
T. Valve Type 1-3
U. Valve Locations 1-4
V. Blow-offs 1-4
W. Air and vacuum release valves 1-4
X. Meters 1-4
Y. Service Lines 1-6
Z. Backflow Prevention 1-7
AA. Fire Sprinkler Lines 1-7
BB. District Sampling Stations 1-7

SECTION 1.2 - SANITARY SEWER SYSTEMS 1-8

A. Sewer Extension 1-8
B. Design Criteria 1-8
C. Sewer Flow 1-8
D. Storm/Surface/Ground Water Restrictions 1-8
E. Main Location 1-8
F. Easements 1-8
G. Location of Line within Street Corridor 1-8

H. Sewer Line Depth 1-9
I. Separation Between Other Utilities 1-9
J. Line Size 1-9
K. Pipe Material 1-9
L. Gravity Pipe Grade 1-10
M. Hill Holders. 1-10
N. End of Sewer Mains. 1-10
O. Manhole Location 1-10
P. Manhole Size. 1-10
Q. Direction Change through Manholes 1-10
R. Manhole Channels. 1-10
S. Transition Manholes 1-11
T. Manhole Lining 1-11
U. Manhole Cone. 1-11
V. Manhole Access Roads 1-11
W. Gravity Side Sewer Connections 1-11
X. Low Pressure Side Sewer Connections 1-11
Y. Joint Gravity Side Sewers. 1-11
ZZ. Gravity Side Sewer Grade 1-11
AA. Side Sewer Cleanouts 1-11
BB. Side Sewer Locations 1-12
CC. Lift Stations 1-12
DD. Lift Station Rock Catch Basin 1-12
EE. Lift Station Water Service 1-12
FF. Grinder Pump Stations 1-12
GG. Force Main Size 1-13
HH. Force Main Material 1-13
II. Force Main Depth 1-13
JJ. Force Main Cleaning 1-13
KK. Force Main Tracer Wire Locate Stations. 1-13
LL. Force Mains Entering/Exiting Structures 1-13
MM. Force Main Air Release/Vacuum Breaker Valves 1-13
NN. Grease Interceptors 1-13
OO. Oil/Water Separators. 1-13
PP. Backwater Valves 1-14

PART TWO - MATERIAL STANDARDS 2-1

SECTION 2.1 - GENERAL 2-1

A. Foundation Gravel 2-1
B. Controlled Density Fill (CDF) 2-1
C. Pea Gravel 2-1
D. Sand Bedding Material 2-2
E. Concrete Encasement 2-2
F. Native Backfill Material 2-2

G. Imported Backfill Material 2-2
H. Hot Mix Asphalt (HMA) 2-2
I. Crushed Surfacing 2-2
J. Not Used 2-2
K. 7/8-Inch Drain Rock 2-2
L. Not Used 2-3
M. Grout 2-3
N. Trench Plug 2-3
O. Unsuitable Materials 2-3
P. Ductile Iron Pipe 2-3
Q. Polywrap for Ductile Iron Pipe 2-4
R. PVC Pipe for Watermains 2-4
S. PVC Pipe for Non-Pressure (Gravity) Sewers 2-4
T. HDPE Pipe for Water Mains andPressure Sewers 2-5
U. C-905 PVC Pipe for Non-Pressure (Gravity) Sewers 2-5
V. Gate Valves 2-5
W. Valve Boxes 2-6
X. Valve Marker Posts 2-6
Y. Concrete Blocking 2-6
Z. Bolts In Piping 2-6
AA. Flange Gaskets 2-6
BB. Flexible Coupling 2-6
CC. Galvanized Steel, Pipe And Fittings For Blowoffs And Air Vacuum Relief Valves 2-6

SECTION 2.2-WATER SYSTEMS 2-6

A. Butterfly Valves 2-6
B. Fire Hydrants 2-7
C. Tapping Sleeve And Valve Assembly 2-7
D. Corporation Stop 2-7
E. Service Saddle 2-7
F. Water Service Pipe 2-7
G. Air And Vacuum Relief Valve Assemblies 2-8
H. Hydrant Guard Posts 2-8

SECTION 2.3 - SEWER SYSTEMS 2-8

A. Sewer Pipe And Appurtenances, Non-Pressure 2-8
B. Sewer Pipe And Appurtenances, Pressure 2-8
C. Side Sewer Pipe, Non-Pressure 2-8
D. Side Sewer Pipe, Pressure 2-9
E. Low Pressure Mainline Sewer Pipe And Appurtenances 2-9
F. Manholes 2-9
G. Air And Vacuum Relief Valve Assemblies 2-11
H. Cleanout Assemblies 2-11

PART THREE - CONSTRUCTION STANDARDS 3-1

SECTION 3.1 - GENERAL 3-1

A. Alignment 3-2
B. Trench Excavation 3-3
C. Timbering and Sheeting 3-3
D. Pipe Laying 3-4
E. Pipe Joints 3-5
F. Bedding Material Placement 3-5
G. Backfilling 3-6
H. Grade Lines 3-8
I. Boring and Casing 3-8
J. Pipe in Fills 3-8
K. Highway Crossings 3-8
L. Valve Installation 3-9
M. Valve Box Installation 3-9
N. Valve Marker Posts 3-9
O. Concrete Blocking 3-9
P. Air and Vacuum Release Valve Installation 3-9
Q. Access Roads 3-9
R. Painting 3-10
S. Raising Structures to Grade 3-11

SECTION 3.2 - WATER SYSTEMS 3-11

A. Fire Hydrant Installation 3-11
B. Water Service Connections 3-11
C. Meter Box Installations 3-11
D. Backflow Prevention (Cross Connection Control) 3-12
E. Connections To Existing Water Mains 3-12
F. Operation of District Valves 3-13

SECTION 3.3 - SEWER SYSTEMS 3-13

A. Manholes 3-13
B. 6-Inch Side Sewer from Main to Property Line 3-14
C. Connection to the Existing Sewer System 3-15
D. Side Sewers (Gravity or Pressure) 3-16
E. Use of Ductile Iron Pipe for Sewers 3-16
F. Lift Stations 3-16

SECTION 3.4 - TESTING FOR WATER AND SEWER PIPELINES 3-16

A. Hydrostatic Tests For Ductile Iron Water Mains 3-16
B. Hydrostatic Tests For HDPE Water Mains 3-17
C. Sterilization And Flushing Of Water Mains 3-178
D. Cleaning And Jetting Of Sewer Mains 3-18

E. Testing Of Non-Pressure Sewer Pipe 3-19
F. Hydrostatic Tests For Pressure Sewer Pipe 3-22
G. Testing For Low Pressure Mainline Sewers And Grinder Pump Systems 3-22

SECTION 3.5 – ABANDONMENT OF WATER AND SEWER FACILITIES 3-22

A. Abandonment of Water Mains 3-22
B. Abandonment of Fire Hydrants 3-23
C. Abandonment of Water Services 3-24
D. Abandonment of Manholes or Vaults 3-24
E. Abandonment of Pressure Sewer Mains 3-24
F. Abandonment of Gravity Side Sewers 3-25

PART FOUR - DISTRICT STANDARD DETAILS AND NOTES 4-1

SECTION 4.1 WATER DETAILS

1” Service Line Detail WD-1
Water Service Notes and Meter Box Requirements WD-1
3/4" and 1" Meter Setter Detail WD-2
1-1/2” and 2” Meter Setter Detail WD-3
3” and 4” Compound Meter Detail WD-4
Water Main Trench Section WD-5
3” and 4” Compound Meter Notes and Materials WD-5
1” And 2” Air and Vacuum Relief Valve Assembly WD-6
Type I and II Blow-Off Assembly WD-7
Fire Hydrant Assembly WD-8
Valve Box Pavement Patch Detail for Paved Areas WD-9
Valve Box Asphalt Collar Detail for Non Paved Areas WD-9
Hill Holder Detail WD-10
Pipe Anchor Detail WD-10
Concrete Blocking WD-11
Deadman Detail WD-12
Tie Rod Attachments WD-12
Testing Connection Detail WD-13
Valve Operating Nut Extension Detail WD-14
Valve Marker Post Detail WD-14
Water Sampling Station Detail WD-15

SECTION 4.2 SEWER DETAILS

Standard Sanitary Manhole Detail SD-1
Manhole Asphalt Collar Detail for Non-Paved Areas and Gen'l Notes .. SD-2
Manhole Pavement Patch Detail for Paved Areas and General Notes SD-2
Manhole Step and Ladder Details SD-3
Drop Manhole Detail SD-3
Pressure Line Connection Detail SD-4

Concrete Encasement for Sanitary Sewers SD-4
Sanitary Force Main Cleanout, Type II Detail.....SD-4
Single Side Sewer Detail SD-5
Double Side Sewer Detail.....SD-5
Side Sewer Details SD-5
Sanitary Manhole Inlet Connection SD-6
Side Sewer Cleanout Detail SD-6
Side Sewer As-Built Detail.....SD-6
Sanitary Sewer Trench Section.....SD-7
Force Main Tracer Wire Locate Station SD-7
Standard Grease Interceptor Detail (1000 Gallon Min.).....SD-8
Cut-In ("Saddle") Manhole Detail SD-9
Sanitary Force Main Cleanout Detail, Type II Detail.....SD-10
Vactor Truck Minimum Hammerhead Turnaround.....SD-11
Vactor Truck Minimum Circular Turnaround SD-11
Recessed Socket Detail SD-12
Davit Socket Installation Detail SD-12
Davit Spindle Detail.....SD-12

SECTION 4.4 CROSS CONNECTION DETAILS

Standard RPBA Notes and Installation Requirements.....CCD-1
Reduced Pressure Backflow Assembly (RPBA) Installation CCD-2
Double Check Valve Assembly (DCVA) Installation.....CCD-3
Standard Fire Sprinkler DCVA Connection Detail CCD-4
Double Check Detector Assembly Notes CCD-5
2-1/2” Double Check Detector Assembly.....CCD-6
4” and Larger Double Check Detector Assembly.....CCD-7

SECTION 4.5 GRINDER PUMP PLANS

Grinder Pump Installation Detail GPD-1
Grinder Pump Site Layout Instructions GPD-2
Typical Circuit Diagram GPD-2
Grinder Pump Cleanout Detail.....GPD-3
Collection Valve Box.....GPD-3
Pressure Line Connection Detail GPD-4
Pressure Line Connection to Gravity Sanitary Sewer Detail.....GPD-4
Pressure Sewer Drop Connection GPD-5
Type II Low Pressure Cleanout with Manhole (For Traffic Areas) GPD-6
Type I Low Pressure Cleanout Detail (For Non-Traffic Areas Only).....GPD-6
Section A-A Detail for Low Pressure Cleanouts GPD-7
Low Pressure Cleanout Notes and Materials List.....GPD-7

PART FIVE - DRAWING STANDARDS 5-1

SECTION 5.1 - GENERAL 5-1

A. Plan Set 5-1
B. Overall Drawing(s) 5-2

TABLE 5-1 Standard Water Symbols 5-3
TABLE 5-2 Standard Water Symbols 5-4

C. District Standards Sheets 5-5
D. Shop Drawings 5-5

SECTION 5.2 - WATER SYSTEMS 5-5

SECTION 5.3 - SEWER SYSTEMS 5-6

SECTION 5.4 - AS-BUILT DRAWINGS 5-7

A. Project Field Drawings 5-7
B. Changes in Street Names and/or Lot Lines/Numbers 5-8
C. Plats and Short Plats 5-8
D. As-Built Submittals 5-8
E. Water System As-Built Details 5-9
F. Sewer System As-Built Details 5-9

PART ONE - DESIGN STANDARDS

1.1 WATER SYSTEMS

The work shall be done in accordance with the Plans and Specifications prepared by the District's Engineer and/or Developer's Engineer and approved by the District. As a preliminary guide to applicants, the following general standards of design are set forth:

A. Watermain Extension –

1. Watermains shall be extended from the existing District water system to the Developer's Real Property. Such offsite watermains shall include watermain laterals and/or service lines, as directed by the District at its sole discretion, to all real property adjacent to the watermain so that future water service can be provided to such other real property.

2. Watermains shall be extended across the Real Property in all directions, as required by the District at its sole discretion, so as to provide for future extension of the water system beyond the Real Property.

3. Watermains shall be constructed within the Real Property so that they are adjacent to all proposed and existing lots and/or buildings within the Real Property.

B. Main Location - Mains shall be laid only in right-of-way or proposed right-of-way or within separate utility tracts in easements that have been or will be granted to the District. Easements across individual lots require District approval during preliminary design.

C. Easements - All easements shall be a minimum of fifteen (15) feet in width and shall be subject to standard District easement restrictions. Piping shall be installed no closer than five (5) feet clear from the easement's edge. Widths in excess of fifteen feet may be required by the District for locations where the District feels that construction, maintenance or repair of the water line within the easement would not be feasible.

The standard District Easement restrictions are set forth in the easement form included as a part of this Agreement. Prohibited items include locating structures over the easement, such as rockeries, walls, concrete slabs and fences.

D. Location of Line within Street Corridor - Normally the water lines shall be located on the North and/or East side of the street. Exceptions to these criteria may be granted based on excessive crossings of other utilities, separation from other utilities or other extenuating circumstances.

Criteria for location within the street cross-section:

1. Thickened edge - Locate 1-1/2 feet behind the edge of the asphalt.
2. Curb/gutter
   a) Sidewalks - locate 6 feet off of street centerline.
   b) No Sidewalks - locate 3 feet behind back of curb
   c) Combination - keep the water line location consistent throughout the project.

3. Shoulder roads - locate 1 foot behind the fog line.
4. Access tracts – extend watermain down access tract (either 4" or 8" diameter pipe), unless only 1 or 2 lots are served AND the lots are within 50 feet of the edge of right-of-way
5. Valves kept out of curb/gutter and avoid storm lines.
6. Need minimum 5 foot run to hydrants.
7. Maintenance of water line possible within the Right-of-Way.

E. Water Line Cover - Minimum depth of cover over top of water main shall be 3 feet. Maximum depth of cover over the top of water main shall be 5 feet.

F. Separation Between Other Utilities

1. Sanitary Sewer - in accordance with criteria set forth in DOE guidelines
2. Storm Sewer - Three (3) foot horizontal clearance.
3. Underground Power, Gas, Telephone and Cable - A three (3) foot horizontal clearance is preferred when utilities are aligned parallel to the water main. In any case where less than three-foot separation occurs exact measurements to the utility lines shall be provided on the As-Built drawing.

G. Line Size - Minimum line size shall be eight (8) inch diameter. In certain cul-de-sac streets or other similar circumstances the District may allow reduction to a four (4) inch diameter line size. For non-single family residential developments, the minimum line size shall be twelve (12) inch diameter unless the requirement is waived by the District.

H. Pipe Material - Pipe shall be cement-lined, Class 52 ductile iron unless otherwise indicated on the plans. Pipe shall be wrapped with a polywrap material conforming to AWWA C-600, unless otherwise indicated on the plans.

I. Dead-end Water Lines - Dead-end lines are not permitted, except in certain cul-de-sac streets, in which case hydrants or blow-offs must be provided at the end of the main.

J. Blocking on End of Mains - Concrete Deadman Blocking is required for mains that may be extended in the future.

K. Connection to Existing Mains

1. End of Main Line - A main line valve, sized the same as the main line size, may be required to be installed at the end of the existing main and new main construction connected to the new valve. Exceptions shall be considered where there is an existing valve in close proximity to the new connection.
2. Tee Connection by Wet Tap - Where the tee connection has the same size diameter as the main being tapped and the main is ductile iron, or the tee connection has a smaller diameter than the main being tapped, a wet tap of the main under pressure shall be used for connection, unless otherwise directed by the District.
3. Cut-in - Cut-in connections shall be utilized in cases where wet taps are not used or when crossing under an existing AC watermain. The cut-in connection normally consists of a

ductile iron tee, appropriate valving, two 10-foot lengths of ductile iron pipe (one on each side of the tee), and fittings necessary to connect the ductile iron pipe to the existing pipe.

L. Fitting Material - Fittings must be cement-lined ductile iron.

M. Multiple Fittings - Where more than one fitting occurs in close proximity to each other, i.e. a tee and valve, the fittings shall be flanged to each other.

N. Lines Entering/Exiting Structures - A flexible fitting shall be placed on all lines entering/exiting vaults or other structures, outside of the structure, within five feet of the structure, for protection from earthquake shaking by providing a point where the difference in vibration rates of the pipe and the structure can be absorbed. The fitting shall be a mechanical joint ductile iron sleeve. If a mechanical joint or bell connection occurs within 5 feet of the structure, outside of the structure, the flexible fitting may be omitted.

O. Pipe Anchors - Pipe anchors shall be required on all lines where the slope of the line is equal to or in excess of 20 percent. For grades up to 35 percent, anchors shall be placed at not over 36 feet on center. For grades between 35 and 50 percent, anchors shall be placed at not over 24 feet on center. For grades over 50 percent, anchors shall be placed at not over 16 feet on center.

P. Hill Holders - Hill holders shall be required where the finished grade is greater than or equal to 15 percent.

Q. Fire Hydrant Location - Standard 5-1/4 inch Main Valve Opening (MVO) fire hydrants are required approximately every 500 feet in urban areas and every 700 feet in rural areas. Standard 5-1/4 inch MVO fire hydrants are required approximately every 300 feet in commercial areas. The location of the fire hydrants shall be approved by the King County Fire Marshall's Office. Hydrants shall not be located within 3 feet of water meter boxes on center. The trunk of trees and bushes shall not be planted within 5 feet of the hydrant.

R. Fire Hydrant Line Size - Pipe runs from main line to standard hydrants less than or equal to 50 feet in length must be a minimum of 6 inches in diameter. Pipe runs from main line to standard hydrants greater than 50 feet in length must be a minimum of 8 inches in diameter. No other water connections shall be allowed on fire hydrant runs.

S. Hydrant Guard Posts - Hydrant Guard Posts shall be required wherever their installation does not violate the King County Road Standards for obstacle placement. Unless otherwise required by the District, guard posts shall be required with hydrants located on streets without vertical curb and gutter sections and in all multi-family/commercial/industrial developments. Use of guard posts for hydrants located in easements in situations other than those mentioned above shall be evaluated on an individual case basis. A minimum of two, and up to four, guardposts may be required for each hydrant.

T. Valve Type

1. Gate valves shall be used for all water mains less than 12 inches in diameter. Gate valves are allowed for wet taps that are 12 inch or larger, provided adequate cover exists.

2. Butterfly valves shall be installed on all water mains 12 inches and larger. Butterfly valves may require plugging for testing purposes.

3. All valves installed for future extensions shall be plugged by blind flange or mechanical plug.

U. Valve Locations

1. Not more than 800 feet between valves in residential areas, not more than 500 feet in commercial areas.

2. At intersections:

3. Full valve clusters at all major water line intersections.

4. Valve on dead end line where dead end line intersects the main water line.

5. Provide ability to serve water line from alternate directions in a looped system, while isolating a section of main for maintenance, repair or continuation.

6. Locate at positions that will be readily located in the future. i.e., at intersections or in conjunction with a fire hydrant.

7. Local circumstances, such as construction requirements.

V. Blow-offs – Blow-offs shall be located at the end of all dead end mains. The District has two standard types of blow-offs, as shown on the Standard District Details. See Part Four of these Technical Specifications. Type I blow-offs are normally used where the main may be extended in the future. Type II blow-offs are required where the main will not likely be extended in the future. Type II blow-offs may be substituted for Type I blow-offs. If a hydrant is located at the end of a dead end main, the District may consider waiving the blow-off requirement.

W. Air and Vacuum Release Valves - Two-inch air and vacuum release valves shall be installed at high points in the system. One-inch air and vacuum release valves may be allowed upon District approval, where calculations indicate the anticipated air volume is within manufacturers specifications for one-inch valves. The depth of the watermain near the air/vacuum release valve shall be deep enough to achieve at least the minimum upslope (2%) to the air/vacuum release valve. The depth of the watermain shall be shown on the drawings.

X. Meters

1. Single-Family Residential

a) <u>Location</u>

All lots shall have meters located along their frontage. Wherever possible, meters shall be located within 5 feet of the property line.

If a lot does not have frontage on a water main, the meter shall be located on the lot's legal access route. Meters must be located within 50 feet of the property line on the access route. If the distance is greater than 50 feet, a watermain must be extended along the access route to the property to be served. The District shall approve all other

locations. The private water service line between the meter and the property must be located under the pavement to protect the private water service line from damage from other utilities, landscaping, fencing, and other construction activities.

All meter locations shall be within the right-of-way or easements granted to the District. The location shall be easily accessible by District personnel at all times.

The trunks of trees and structures shall not be located within 5 feet of meter boxes. Meter boxes shall be positioned with at least 18 inches clearance from any other utilities, bushes or obstructions. Meters shall be located, where practical, on lot corners. A single meter setter for each lot shall be used.

Locating meter boxes in driveways or paved areas shall not be permitted, except with written District approval. Where unavoidable traffic bearing meter boxes shall be used, a 3/4 inch expansion joint shall be provided around the box with a eighteen (18) inch gap between the expansion joint and meter box on all sides. Sanitary side sewers shall be a minimum of 10 feet away from the meter location.

b) Size - Meter size shall be based on the lot or house size, total plumbing fixture count, system pressure, the use of in-ground irrigation and/or the need for fire sprinkler systems. The standard meter sizes are 3/4" and 1". If there are lots that have specific meter size requirements based on the need for fire sprinkler systems, or other reasons, they shall be called out on the design. Single family houses with separate ADUs (accessory dwelling unit) may be served by a single meter. The plumbing fixture count shall be the combined total for both structures.

c) The following are the District criteria for meter and service line sizes:

Type of Service	Service Line Size	Setter Size	Meter Size
Standard	1”	Single ¾”	¾”
No. of Plumbing Fixtures Requiring Greater than ¾” Meter*	1”	Single 1”	1”
Fire Sprinklers	1”	Single 1”	1” Note: If pressures are less than 55 psi, inform developer and find out if larger lines/meters will be required

*Requires that the property owner apply for a larger meter and pay all necessary fees.

2. Multi-Family/Commercial/Industrial

a) Service to Each Building – For non-single family residential developments, each building shall be served by at least one individual meter. Where a building has service from multiple meters, the plumbing system served by each meter shall be separate, so that service is provided only from one meter.

b) Location - The District shall approve all meter locations. All meter locations shall be within the right-of-way or easements granted to the District. The location shall be easily accessible by District personnel at all times. Locating meter boxes in driving areas shall not be allowed. Traffic bearing meter boxes shall be used if the location is in an area where vehicles may enter within 2 feet of driving surface. Sanitary sewers or side sewers shall be a minimum of 10 feet away from the meter location. A single meter setter for each lot shall be used.

c) Size - Meter size shall be based on the needs and requirements of the development. Specific meter sizes shall be called out on the design. With 3" and 4" meters the meter should be specified as a Compound or other type meter.

3. Irrigation

a) Location - The District shall approve all meter location. All meter locations shall be within the right-of-way or easements granted to the District. The location shall be easily accessible by District personnel at all times. Irrigation meters shall not be placed on double setters, where the other meter may be for domestic use. Locating meter boxes in driving areas shall not be allowed. Traffic bearing meter boxes shall be used if the location is in an area where vehicles may enter within 2 feet of driving surface. Sanitary sewers or side sewers shall be a minimum of 10 feet away from the meter location.

b) Size - Meter size shall be based on the needs and requirements of the development. Specific meter sizes shall be called out on the design. With 3" and 4" meters the meter should be specified as a Turbine or other type meter. Non single-family residential customers shall have an irrigation meter that is separate from the domestic supply water meter.

c) Cross-Connection Control - Irrigation water meters shall have a cross-connection control device, approved in the State of Washington, installed on the customer side of the meter, near the meter box. The cross-connection control device shall be tested at the time of installation by a State-certified backflow prevention tester.

Y. Service Lines

1. Location - Service lines shall run as close to perpendicular across the street and/or right-of-way as possible, from the main to the meter box. The maximum length service line shall be 60 feet. Where "bubbles" are located off to the side of a street, the length may be increased if there are two or less service lines that are greater than sixty feet in length. If the right-of-way width is greater than sixty feet, the service line length may be increased accordingly.

2. Size - Service line size shall be based on the number of meters that will be served by the line, the size of the meter(s) to be served, system pressure and/or the size of the lots being served. Within a development, if there are more than one service line size based on the District criteria, the larger line size shall be used for all domestic services. District criteria for single family residential development services are given in the Meters section above. Irrigation, multi-family, commercial or industrial service line sizes shall be based on the request and needs of the developer.

3. Obstructions - Structures that shall not be constructed over the service lines include, but are not limited to: fences, carports, buildings, landscape timbers, retaining walls, mailbox stands, trees, and rockeries.

Z. Backflow Prevention

1. For non single-family structures, double check detector assemblies (DCDA) shall be provided on fire sprinkler lines. DCDA's shall be located in vaults as shown in Part Four.

2. Additional backflow prevention devices may be required depending on type of facility. For facilities designated by the State of Washington as high hazard facilities (such as car washes, service stations, multi-use commercial building pads, mixed-use multi-family, etc.), premise isolation of all water service lines shall be provided using reduced pressure backflow assemblies (RPBA). Such high hazard facilities shall be required to have a DCDA for the fire sprinkler system, unless such fire sprinkler system has chemicals added.

3. For single-family structures, backflow prevention devices shall be provided for in-ground irrigation systems at the point where the irrigation lines are connected to the domestic supply line to the house, and for fire sprinkler systems. Backflow devices for fire sprinkler systems shall be double check valve assemblies (DCVA) installed directly behind the water meter.

4. For multi-family residential structures greater than 30 feet in height shall have a DCVA installed directly behind the water meter. Mulit-family in a mixed use development shall require a RPBA.

5. For additional information, see the District's Cross Connection Control Program requirements.

AA. Fire Sprinkler Lines

1. Fire sprinkler lines shall be a minimum of 4 inch diameter ductile iron between the main and the DCDA vault. The line shall be fully restrained with megalug fittings, field lock push on joints, and thrust blocks.

2. For non single-family customers, fire sprinkler service shall be provided through a separate tap to the water main, and a DCDA shall be required. Some single-family customers may also require a separate tap.

3. Additional backflow prevention devices may be required depending on type of facility or system.

BB. District Sampling Stations - District sampling stations, installed where directed by the District, shall consist of a 1-inch water service line and meter stop. District will install sampling station.

1.2 SANITARY SEWER SYSTEMS

The work shall be done in accordance with the Plans and Specifications prepared by the District's Engineer and/or Developer's Engineer and approved by the District. As a preliminary guide to applicants, the following general standards of design are set forth:

A. Sewer Extension

1. Sewers shall be extended from the existing District sewer system to the Developer's Real Property. Such offsite sewers shall include sewer mains and/or side sewer stubs, as directed by the District at its sole discretion, to all real property adjacent to the sewer so that future sewer service can be provided to such other real property.

2. Sewers shall be extended across the Real Property in all directions so as to provide for future extension of the sewer system beyond the Real Property.

3. Sewers shall be constructed within the Real Property so that they are adjacent to all proposed or existing lots and/or buildings within the Real Property.

B. Design Criteria - All design shall be in accordance with Department of Ecology "Criteria for Sewer Works Design", latest revision.

C. Sewer Flow - All sanitary sewer design shall be by gravity flow, except by special arrangement with the District.

D. Storm/Surface/Ground Water Restrictions - No storm water, surface water or ground water shall be discharged into sanitary sewers.

E. Main Location - Mains shall be laid only in right-of-way or proposed right-of-way or within separate utility tracts in easements that have been or will be granted to the District. They shall be located in public right-of-way in preference to easements. Easements across individual lots require District approval during preliminary design.

F. Easements - All easements shall be a minimum of fifteen (15) feet in width and shall be subject to standard District easement restrictions. Piping shall be installed no closer than five (5) feet clear from the easement's edge. Widths in excess of fifteen feet may be required by the District for locations where the District feels that construction, maintenance or repair of the sewer line within the easement would not be feasible.

The standard District Easement restrictions are set forth in the easement form included as a part of this Agreement. Prohibited items include locating structures over the easement, such as rockeries, walls, concrete slabs, fences, and trees.

G. Location of Line within Street Corridor - Normally the sewer lines shall be located on the South and/or West side of the street. Exceptions to these criteria may be granted based on excessive crossings of other utilities, separation from other utilities or other extenuating circumstances.

Criteria for Location within the Street Cross-Section

1. Thickened edge - Locate 6 feet off of street centerline.

2. Curb/gutter - locate 6 feet off of street centerline.
3. Shoulder roads - locate 2 feet behind the fog line.
4. Manholes kept out of curb/gutter and drainage courses.
5. Maintenance considerations - accessible and maintenance of sewer line possible within the Right-of-Way.
6. Amount of restoration that will be required following construction.

H. Sewer Line Depth

1. All gravity sewer mains shall be a sufficient depth to drain basements and be protected against damage by frost and traffic. There shall be a minimum of five (5) feet of cover over the crown of the sewer line. At natural drainage crossings, this may be reduced to three (3) feet.

2. A minimum of four (4) feet of cover shall be provided over low pressure mainlines.

I. Separation Between Other Utilities

1. Water - in accordance with criteria set forth in DOE guidelines
2. Storm Sewer - Three (3) foot horizontal clearance.
3. Underground Power, Gas, Telephone and Cable - A three (3) foot horizontal clearance is preferred when utilities are aligned parallel to the water main. In any case where less than three foot separation occurs exact measurements to the utility lines shall be provided on the As-Built drawing.

J. Line Size

1. Minimum gravity line size shall be eight (8) inch diameter.
2. Minimum low pressure mainline size shall be two (2) inch diameter.
3. The extension shall incorporate adequate capacity to provide the future expansion of the system in conformity with the District's comprehensive planning and future needs.

K. Pipe Material

1. Gravity pipe shall be PVC or ductile iron unless otherwise indicated on the plans. Ductile iron pipe shall be wrapped with a polywrap material conforming to AWWA C-600 and shall be lined with Protecto 401, unless otherwise indicated on the plans. C-905 pipe may be considered for lines fourteen (14) inches and greater in diameter. <u>Pipes with slopes greater than or equal to twenty (20) percent shall be ductile iron or C-900 or C-905.</u> Pipes buried twenty (20) feet deep or deeper shall be ductile iron, C-900 or C-905. Ductile iron pipe shall be lined with Protecto 401 ceramic epoxy lining.

2. Low pressure pipe shall be HDPE SDR 11 with tracer wire.

L. Gravity Pipe Grade

1. Lines shall be on straight alignment and uniform grade between manholes.

2. No grade shall be permitted resulting in a velocity of less than two feet per second at design flow.

3. If slope and volume are such that velocities above twelve feet per second are realized at average flow, special provisions shall be made for anchoring the pipe and protect against erosion of the sewer system. In any case where the slope of the pipe is greater than twenty (20) percent, pipe anchors shall be required.

4. The crowns of pipes of different diameters entering a manhole shall be installed at the same elevation.

5. If the slope of the sewer pipe upstream or downstream of a manhole exceeds five (5%) percent, the greatest slope shall be conveyed through the manhole. Manhole invert elevations shall be calculated reflecting this condition and shall be shown on the drawings.

M. Hill Holders - Where the finished grade of the ground is in excess of fifteen (15) percent, hill holders shall be required.

N. End of Sewer Mains - All sewer mains shall end in a manhole. Cleanouts may be considered on an individual case basis with written District approval.

O. Manhole Location - A manhole shall be provided at each grade, alignment or size change. No distances in excess of 300 feet shall be permitted between manholes unless authorized in writing by the District.

P. Manhole Size - All manholes less than 20 feet deep shall be forty-eight (48) inch minimum diameter, and eight (8) foot minimum depth from invert to rim elevation. The District may, at its sole discretion, allow manholes between six (6) feet and eight (8) feet in depth from invert to rim elevation. Manholes 8 feet deep and shallower shall have two (2) foot cones. If the depth of the sewer is 20 feet or greater, sixty (60) inch minimum diameter manholes shall be used. If the diameter of the sewer is 15 inches or greater, seventy-two (72) inch minimum diameter manholes shall be used.

Q. Direction Change through Manholes - The change in direction between flow entering and exiting a manhole shall not be less than ninety (90) degrees. (Any change in direction requiring an acute angle in the manhole channel is not permitted.)

R. Manhole Channels - Manholes shall be full-channel with a minimum of one-tenth (0.1) foot drop in elevation through the manhole. Where the slope of a sewer line is greater than five (5%) percent as discussed above, the greater slope shall be continued through the manhole. The channel for sewer lines entering manholes perpendicular to the through direction of flow shall be curved in a sweeping radius to direct the flow downstream. No pre-channeled manholes shall be allowed.

S. Transition Manholes – In cases where a sewer main with a slope in excess of four (4) percent must turn through a manhole at an angle between 45° and 90°, a transition manhole shall be provided upstream to reduce the slope to a maximum of 2 percent and/or to reduce the angle of the turn to between 0° and 45°. Outside drop connections may be used ONLY where the angle of the downstream direction of flow is between 0° and 45°.

T. Manhole Lining – The manhole into which a force main or low pressure mainline discharges shall be lined with 5-9 mils of Tnemec Series 141 Epoxoline or Wasser Aeroshield. In addition, the two manholes downstream of that manhole shall be lined with Tnemec Series 141 Epoxoline or Wasser Aeroshield, if installed as part of the same project. If existing, the two downstream manholes shall be lined with a protective coating resistant to hydrogen sulfide corrosion, such as Wasser Aeroshield, or Tnemec Series 141 Epoxoline. Submit product information for District review. Coating thickness shall be per the manufacturer's recommendations.

U. Manhole Cone - Manholes eight (8) feet and less in depth shall have cones a maximum of two (2) feet in height.

V. Manhole Access Roads – Wherever possible, access to manholes shall be provided on public or private roads to which the District has access. Where such access is not possible, access roads shall be required to **ALL** manholes not located within or immediately adjacent to public or private roads. Turnarounds conforming to the District's standard detail shall be provided at the end of dead end manhole access roads.

W. Gravity Side Sewer Connections - Connections to a new sewer main shall be made with tee fittings. Connections to an existing sewer main of a single-side sewer not associated with a new development may be made, with written District approval, by cut-in tee fitting or side sewer saddle connection conforming to the requirements in Part 2.

X. Low Pressure Side Sewer Connections – Connections shall be made with SDR 11 or Schedule 80 threaded fittings and shall terminate in Collector Valve Boxes as shown in the Standard Details.

Y. Joint Gravity Side Sewers - Double side sewers shall be split with wye fittings. If a side sewer serves three or four housing units, a minimum of six (6) inch diameter pipe shall be used to the last (upper) wye. A cleanout will be required at the wye where the upper connection is made. Side sewers serving more than two residential structures shall be subject to approval by the District. Up to three housing units in one building (triplex) may be served by one side sewer. Joint side sewers for commercial structures are not permitted. Each commercial structure shall be equipped with its own side sewer.

Z. Gravity Side Sewer Grade - Side sewers from the sewer main to the building shall have a minimum slope of two (2) percent. At the District's sole discretion, slopes may be reduced to one (1) percent; in that case, the side sewer diameter shall be increased to six (6) inches.

AA. Side Sewer Cleanouts – Cleanouts shall be installed at intervals not to exceed one hundred (100) feet in straight runs and for each aggregate horizontal change in direction exceeding one hundred thirty-five (135) degrees per the Uniform Plumbing Code. The maximum length of side sewer shall be 200 feet unless the requirement is waived by the District. Side sewer

cleanouts shall be located no more than three feet from the building foundation. For single-family residential developments, cleanouts located in unimproved or landscaped areas shall be no more than 12 inches below ground surface. Cleanouts located in sidewalks, pavement, or other improved areas and cleanouts for non-single family developments shall be brought to grade as shown in the Standard Detail.For multiple single-family residential connections, a six (6) inch diameter wye and cleanout shall be installed where the last (upper) connection is made. The District may require a forty-eight (48) inch manhole at the upper terminus of such lines on both residential and commercial tracts in lieu of cleanouts.

BB. Side Sewer Locations

1. In single family residential developments the side sewers shall be extended at least ten (10) feet into the individual lots, and shall be at least five (5) feet from a side property line.
2. Side sewers shall be installed perpendicular to the main.
3. All lots shall have side sewers located along their frontage and shall not be located in private side sewer easements without the express prior written consent of the District.
4. On extensions through areas not currently being developed, side sewers shall be extended as close as practical to the property line.
5. In non-single family residential developments the locations of the side sewer extensions shall be decided on a case by case basis.
6. A minimum of ten (10) foot separation shall be maintained between the side sewer and water mains or water service lines.
7. Structures that shall not be constructed over the side sewer lines include, but are not limited to, fences, carports, buildings, landscape timbers, retaining walls, mailbox stands, trees, and rockeries.
8. A maximum of two (2) side sewers shall be connected to a manhole.

CC. Lift Stations - In any case where a lift station is being considered, the District shall be consulted for its latest criteria on lift stations standards for controls, telemetry, generators and other associated components. Permanent lift stations shall have permanent standby generators.

DD. Lift Station Rock Catch Basin - The last manhole in the lift station site before entering the wet well shall have a two (2) foot deep catch below the lowest pipe invert. This manhole shall be located so that it is accessible for regular cleaning of the manhole by a vactor truck.

EE. Lift Station Water Service - A water service with a 3/4-inch hose bib shall be provided at all lift stations, with a Reduced Pressure Backflow Assembly (RPBA) backflow prevention device, located at the property line. In wet well/dry well installations the service shall be located within the dry well.

FF. Grinder Pump Stations - Grinder pumps may be installed for individual structures as designated by the District. Standard lift stations will normally be required where gravity flow cannot be achieved. See Standard Details.

GG. Force Main Size - The force main shall be sized to maintain a minimum velocity of three (3) feet per second (fps) with design flows and a maximum velocity of 8 fps. A minimum diameter of four (4) inches shall be used with sewage pumps that can pass a three (3) inch solid.

HH. Force Main Material – Permanent force mains shall be ductile iron for diameters of four (4) inches or greater, and high-molecular weight polyethylene pipe (HDPE) for diameters less than four (4) inches. Permanent ductile iron force mains under gas easements shall be AWWA C900, Class 150 pipe. Temporary force mains may be AWWA C900, Class 150 for diameters of four (4) inches or greater, and high-molecular weight polyethylene pipe for diameters less than four (4) inches. The determination of whether a force main is temporary or permanent shall be made solely by the District.

II. Force Main Depth - A minimum cover of six (6) feet is required. This cover may be reduced to four (4) feet when ductile iron pipe is used. The cover may be reduced to three feet when crossing a drainage course. The cover for grinder pump collector force mains shall be a minimum of three (3) feet.

JJ. Force Main Cleaning – For force mains 8 inches in diameter and larger, the lift station will be equipped with a pig launch facility unless otherwise directed by the District. The manhole into which the force main discharges shall be equipped with an aluminum pig catch grating. Cleanouts will be provided on force mains 6 inches in diameter and smaller, with the cleanouts spaced at 500-foot intervals.

KK. Force Main Tracer Wire Locate Stations – Test stations containing tracer wire shall be located over the centerline of all force mains at 500-foot intervals and at bends.

LL. Force Mains Entering/Exiting Structures - A flexible fitting shall be placed on all lines entering/exiting vaults or other structures, outside of the structure, within five feet of the structure, for protection from earthquake shaking by providing a point where the difference in vibration rates of the pipe and the structure can be absorbed.

MM. Force Main Air Release/Vacuum Breaker Valves - Air release/vacuum breaker valves shall be required at high points in the force main and as designated by the District.

NN. Grease Interceptors – All commercial or industrial facilities, schools, churches, or other non-single family residential facilities that have food service facilities or car washes shall be equipped with an approved type and adequately sized grease interceptors or oil/water separators. Submit sizing calculations for District review. Piping shall be a minimum of 6 inches in diameter and the discharge pipe shall be connected directly to a manhole. Connection to the blackwater building sewer requires written District approval. All commercial building pads with unidentified or potentially variable uses must be provided with a grease interceptor at the time of initial construction. Provide graywater plumbing to building pad(s). If discharge into manhole is not feasible, in the sole opinion of the District, provide a sampling point prior to discharge to sewer. Submit plan and product submittal for District review. For additional information, see the District's Fats, Oils, and Grease regulations.

OO. Oil/Water Separators – Oil/water separators shall be provided for parking garages, car washes, service stations, and other covered facilities where gasoline and oil may contaminate storm water handling facilities. Submit sizing calculations for District review. The oil/water

separator shall be located on the side sewer just upstream from the District's sewer system, and shall be privately maintained and owned. Open air parking lots, although they may be equipped with oil/water separators, shall not be routed to the sewer system since they will introduce stormwater inflow to the sewer system. If discharge into manhole is not feasible, in the sole opinion of the District, provide a sampling point prior to discharge to sewer. Submit plan and product submittal for District review. For additional information, see the District's Fats, Oils, and Grease regulations.

PP. Backwater Valves – "The Uniform Plumbing Code requires backwater valves on building sewers where the finished floor is below the rim of the upstream manhole. Backwater valves, if they are installed, must be located within the building footprint upstream of the cleanout. The District is not responsible for their installation, maintenance, or operation. The side sewer permit for a building with a backwater valve shall include a hold harmless clause which indemnifies the District against any liability, damage, or cost which may accrue from the installation and operation of a backwater valve in the side sewer." A note with the exact wording shown in quotes above shall be placed on the drawings with an asterisk, and each building or lot whose finished floor elevation indicates the need for a backwater valve shall have an asterisk next to the building number or lot number as reference to the note.

PART TWO - MATERIAL STANDARDS

2.1 GENERAL

All materials and equipment shall be new and undamaged. Where possible, the same manufacturer of each item shall be used throughout the job. In accordance with paragraph WS-20 "Material and Equipment List" of this Agreement, the Developer or Contractor shall file a material and equipment list with the District including the quantity, manufacturer, model number and technical specifications, if applicable, of material and equipment to be installed as part of the work. If requested by the District, five (5) copies of all information concerning the specifications, installation, operation and maintenance of material and equipment installed as part of the work shall be furnished to the District in five separate labeled binders.

A. Foundation Gravel

Foundation gravel used for backfill of over-excavated trenches shall conform to the requirements of WSDOT/APWA 9-03.17, “Foundation Material, Class B.”

B. Controlled Density Fill (CDF)

Controlled Density Fill (CDF) shall be a mixture of Portland cement (Type I or II), fly ash (ASTM C618, Class F), fine aggregates (coarse sand with 100% passing 3/8-inch sieve, 60-100% passing No. 4 sieve, and 0-5% passing No. 200 sieve), and water, with a maximum 28-day compressive strength of 100 psi, conforming to following proportions:

Material	Batch Weight/Cubic Yard
Mixing Water	50 lb/cu yd
Portland Cement	30 lb/cu yd
Fly Ash	200 lb/cu yd
Fine Aggregate	3200 lb/cu yd

Submit CDF mix design for District review prior to use.

C. Pea Gravel

Bedding material for PVC or HDPE pipe shall be well graded, clean granular gravel material commonly known as pea gravel. Material slightly smaller than pea gravel may be used.

Bedding material shall meet the following requirements:

U.S. STANDARD SIEVE SIZE	PERCENT PASSING
3/8" Square Opening	100%
No. 8 Sieve	0 - 5%

D. Sand Bedding Material

Bedding material for ductile iron pipe shall conform to the requirements of WSDOT/APWA 9-03.13, Backfill for Sand Drain".

E. Concrete Encasement

Concrete material for encasing water mains crossing over sewer pipes shall have a 30-day compressive strength of not less than 1,500 psi. The mix shall have a slump of between one (1) and five (5) inches.

F. Native Backfill Material

Native materials will be considered suitable for use in backfilling if the material is not sensitive to moisture (compactable if moisture content is greater than optimum). Native materials shall be a sand and gravel combination with no deleterious materials. All materials shall pass a 3-inch sieve.

G. Imported Backfill Material

Durable crushed gravel or rock; or naturally occurring sands and gravels free from wood, bark, roots or other extraneous material, meeting the requirements of WSDOT/AWPA 9-03.19 for "Bank Run Gravel for Trench Backfill", with percent passing the No. 200 sieve limited to 5 percent max.

H. Hot Mix Asphalt (HMA)

Hot Mix Asphalt (HMA) shall be CL ½" as specified in WSDOT/APWA Section 9-03.9(6) Aggregates for Hot Mix Asphalt, HMA Proportions of Materials, and Performance Graded PG 58-22. Aggregate for asphalt concrete shall conform to the requirements of WSDOT/APWA Sections 9-03.8(1) through 9-03.8(6) for Aggregates for Hot Mix Asphalt, inclusive.

I. Crushed Surfacing

1. Top Course and Keystone Material (5/8" Minus): For use in the restoration of excavated areas. Top Course and Keystone material shall conform to the requirements of WSDOT/APWA 9-03.9(3), "Crushed Surfacing" for Top Course and Keystone.

2. Base Course Material (1 ¼" Minus): Base Course Material shall conform to the requirements of WSDOT/APWA 9-03.9(3), "Crushed Surfacing" for Base Course.

J. Not Used

K. 7/8-inch Drain Rock

Material for drains around facilities such as hydrants, blowoffs, and hill holders shall conform to the requirements of WSDOT/APWA 9-03.12(5), "Gravel Backfill for Drywells", except that the material shall be washed to remove fines.

L. Not Used

M. Grout

Grout shall consist of one part Portland Cement, three parts fine sand, and sufficient water to allow proper workability. “Jet-Set” is not allowed.

N. Trench Plug

Low permeable fill material, a non-dispersible clay material having a minimum plasticity index of 10.

O. Unsuitable Materials

1. Unsuitable materials include the materials listed below:

   (a) Soils which, when classified under ASTM D 2487 - Standard Classification of Soils for Engineering Purposes (Unified Soil Classification System), fall in the classifications of Pt (Peat), OH (organic clays of medium to high plasticity, organic silts), CH (inorganic clays of high plasticity, fat clays), MH (inorganic silts, micaceous or diatomaceous fine sandy or silty soils, elastic silts), or OL (organic silts and organic silty clays of low plasticity). OH, CH, MH with liquid limits of greater than 50 and OL liquid limit less than 50.

   (b) Soils which cannot be compacted sufficiently to achieve the density specified for the intended use or as determined by the District. Soil additives for drying or stabilization will not be allowed, including but not limited to fly ash, Portland cement, or kiln dust.

   (c) Materials that contain organic material, hazardous or designated waste materials including petroleum hydrocarbons, pesticides, heavy metals, and any material which may be classified as hazardous or toxic according to applicable regulations.

   (d) Soils that contain greater concentrations of chloride or sulfate ions, or have a soil resistively or pH less than the existing on-site soils.

P. Ductile Iron Pipe

Ductile Iron pipe shall be cement mortar-lined and zinc coating as specified herein unless otherwise indicated on the plans. Any pipe found to have dimensional tolerances in excess of those prescribed by the manufacturer or having defects which prevent adequate joint seal or any other damage shall be rejected. If requested by the District, not less than three nor more than five pipe lengths of pipe for each size, selected from stock by the District, shall be tested as specified for maximum dimensional tolerance of the respective pipe.

Ductile Iron pipe shall conform to AWWA Standard C151, Thickness Class 52 or as indicated on the Drawings. Pipe with cement mortar lining shall conform to AWWA C104. The exterior of Ductile Iron pipe shall be coated with a layer of arc-sprayed zinc per ISO 8179. The mass of the zinc applied shall be 200b/m². A finishing layer topcoat shall be applie to the zinc. The mean dry film thickness of the finishing layer shall not be less than 3 mils with a local minimum not less than 2 mils. The coating system shall conform in every respect to ISO 8179-1 "Ductile iron pipes- External zinc-based coating – Part 1: Metallic zinc with finishing layer" Second edition 2004-06-01 Ductile Iron pipe and fittings for sewer shall be lined with PROTECTO 401 ceramic epoxy coating (Manufacturer – Induron, Birmingham, Alabama (888) 773-2401). Joints shall be mechanical joint or push-on joint and shall conform to AWWA C111.

1. Ductile Iron and Cast Iron fittings shall conform to AWWA Standard C110. Mechanical or push-on joints shall conform to AWWA Standard C111. Flanged joints shall conform to ASA Standard B-16.1, Class 125 with ductile iron followers. All fittings shall be cement mortar lined in conformance with AWWA Standard C104.
2. Where required on the Drawings, restrained push-on joint pipe and fittings shall be provided. Restrained joint pipe shall conform to AWWA Standard C151, Thickness Class 52 or as indicated on the Drawings. Pipe shall have cement mortar lining conforming to AWWA C104. Push-on restrained joints shall conform to AWWA C111. Restrained joints shall be designed for a water working pressure of 350 psi for sizes 4-inch through 24-inch, 250 psi for sizes 30-inch through 48-inch, and 150 psi for sizes 54-inch through 64-inch. Submit type of restrained joint pipe to the District for approval.
3. Where fittings are called for on restrained joint pipes, mechanical joints with megalugs or Alpha fittings shall be used.
4. Ductile Iron pipe shall be polywrapped.
5. Ductile Iron pipe shall be furnished with factory-installed plugs in each end of each stick of pipe. Such plugs shall remain installed until the pipe is ready to be installed in the trench.

Q. Polywrap for Ductile Iron Pipe

Polywrap shall conform to ANSI/AWWA A21.5/C105 (See AWWA C600) for linear low-density polyethylene film. The inside surface of the polyethylene wrap to be in contact with the pipe exterior shall be infused with a blend of anti-microbial biocide to mitigate microbiogically influenced corrosion and volatile corrosion inhibitor to control galvanic corrosion.

R. PVC Pipe for Watermains

PVC pipe 4 inches or larger in diameter shall conform to AWWA C900, Class 150. PVC pipe for water service shall only be used where crossing the gas pipeline easement. The pipe shall conform to WSDOT/APWA 9-30.1(5).

S. PVC Pipe for Non-Pressure (Gravity) Sewers

PVC pipe for depths up to twenty (20) feet, and less than 14 inches in diameter shall conform to ASTM D3034 and shall be defined as flexible conduit. Joints shall conform to ASTM D3212 using a restrained rubber gasket conforming to ASTM F477. Fittings shall be injection molded tees . Saddles fastened to pipe with external bands are not acceptable on any new system.

PVC pipe used for depths twenty (20) feet and greater and less than 14 inches in diameter shall conform to AWWA specification C900, Class 150 (DR 18). Joints shall conform to ASTM D3139 with rubber gaskets meeting ASTM F477. Fittings shall be Class 150 injection molded tees, meeting the requirements of AWWA C-907 and ASTM D1784.

T. HDPE Pipe for Water Mains and Pressure Sewers

HDPE pipe for water mains and pressure sewers may be used in specific situations where Ductile Iron pipe is not appropriate or feasible. The use of HDPE requires written District approval. The specifications and class of the HDPE will be determined on a project-specific basis including such factors as working pressure.

U. C-905 PVC Pipe for Non-Pressure (Gravity) Sewers

C-905 PVC pipe may be considered for lines that are fourteen (14) inches and greater in diameter. Pipe shall conform to the requirements of AWWA C905 and Uni-B-11.

All pipe joints shall be rubber gasketed. Rubber gaskets shall conform to ASTM F477.

V. Gate Valves

1. Gate valves shall conform to AWWA C-515, be epoxy coated, resilient seated, have a non-rising stem, a minimum of 200 PSI working pressure unless otherwise specified, shall have a standard 2-inch operating nut, and the standard opening rotation shall be counter-clockwise.

2. Gate valves shall be used for all water mains less than 12 inches in diameter. Gate valves are allowed for wet taps.

3. Butterfly valves shall be installed on all water mains 12 inches and larger. Butterfly valves may require plugging for testing purposes.

4. Where called for on the plans, gate valves shall be used for sewers four (4) inches and larger.

5. Special valves and fittings shall be as specified on the plans.

6. Gate Valves shall be one of the following types, with stainless steel bolts:
   a) Mueller
   b) Kennedy M & H
   c) Clow
   d) US Pipe
   e) American Flow Control Series 25002-17
   f) AVK

W. Valve Boxes

Valve boxes shall be Cast Iron, 2 piece, suitable for installation required, equal to Olympic Foundry Company/APWA Valve Box VB045. Valve box lids shall fit snugly in the casting. Valve Box Lid shall be marked “WATER” for water facilities. Valve boxes shall be equal to Olympic Foundry 940 and marked “SEWER” for sewer facilities.

X. Valve Marker Posts

Valve marker posts shall be reinforced concrete posts, 4"x4" on one end and 4"x6" on the other end, and 42" long. Posts shall be equipped with 1.5” raised Cole brand numbers referencing distance to the valve to the nearest foot. Cole brand numbers shall be installed using waterproof Liquid Nails brand glue suitable for metal surfaces.

Y. Concrete Blocking

Concrete blocking shall be a 1:3:6 mix with a six-inch (6") maximum slump.

Z. Bolts In Piping

All bolts shall be new and shall be of the same type and quality of the pipe or fittings as supplied by the manufacturer. Bolts shall be in conformance with AWWA Standard C110.

AA. Flange Gaskets

Flange gaskets shall be Ring-type cloth insert rubber gaskets 1/16-inch thick equal to Rainbow or Durable Garlock. Gaskets shall cover the full face of flanged fitting ends.

BB. Flexible Coupling

Flexible couplings shall be cement-lined, Mechanical Joint, Ductile Iron long-pattern sleeves unless otherwise approved by the District.

CC. Galvanized Steel, Pipe And Fittings For Blowoffs And Air Vacuum Relief Valves

Galvanized steel pipe shall conform to ASTM A120-65, Schedule 40. Galvanized steel fittings shall be malleable galvanized.

2.2 WATER SYSTEMS

All water mains shall be cement-lined Ductile Iron as specified herein unless otherwise indicated on the Plans.

A. Butterfly Valves

Butterfly valves shall conform to AWWA C-504. Unless otherwise specified the valves shall be class 150, ductile iron, epoxy coated, stainless steel bolts, shaft seals shall be "O" ring type, the standard opening rotation shall be counter-clockwise and shall have a standard 2" operating nut.

1. Butterfly Valves shall be one of the following types:

a) Mueller/ Pratt

b) Kennedy M & H

B. Fire Hydrants

1. Fire hydrants shall be a dry-barrel, compression-type traffic model with a 5-1/4 inch main valve opening (MVO) with brass on brass or brass on stainless steel seating as specified for 36-inch trench, unless otherwise designated, flanged at ground line, 6 inch MJ connection with lugs suitable for rods; two 2-1/2 inch hose connections, National Standard Thread; pumper connection shall be a 4-inch Seattle Standard Thread 4.875 x 6 equipped with a five (5) inch, 125-5 Storz quick connect fitting, unless otherwise noted on the drawings or as required by the local fire department jurisdiction. Operating nut shall be 1-1/4 inch pentagon and shall open counter-clockwise. Hydrant shall be so constructed that the direction facing of pumper connection may be rotated to face the roadway. Hydrants shall comply with AWWA C502. Unless otherwise specified, hydrant shall be of dry barrel traffic type with break flange construction.

2. Hydrants shall be one of the following types:

a) Dresser M&H 129

b) Mueller A423 (Super Centurion 250)

c) Clow Medallion

d) American Darling B-62-B

e) AVK Series 2780

f) U.S. Pipe Sentinel 250

C. Tapping Sleeve And Valve Assembly

Where required by the District, tapping sleeves shall be Romac FTS 420 or JCM 412 , with fusion-bonded epoxy coating and Type 304 stainless steel fasteners. The gate valve shall conform to the requirements herein.

D. Corporation Stop

See Standard Details - Service Connections.

E. Service Saddle

See Standard Details - Service Connections.

F. Water Service Pipe

Water service pipe shall be DRISCOPLEX 5100 ULTRA-LINE or equal manufactured from a high density, extra high molecular weight pipe resin polyethylene defined by ASTM D3350 having a cell classification of 345564C as polyethylene type III, grade, PE4710. Pipe shall be Iron Pipe Size – ID ASTM D2239 – SIDR 7 and have a working pressure of 200 PSI at 73.4 degrees F. The polyethylene extrusion compound from which the PE pipe and tubing are

extruded shall be made of virgin quality material. The polyethylene pipe or tubing shall be marked in accordance with ASTM D-2239 for IPS pipe sizes and carry the National Sanitation Foundation (NSF) seal of approval. See Standard Details for installation procedures.

G. Air and Vacuum Relief Valve Assemblies

Air and Vacuum Relief Valve assemblies shall be APCO No. 143-C, Crispin UL10 or District approved equal for one (1) inch assemblies and APCO No. 145-C, Crispin UL20 or District approved equal for two (2) inch assemblies, or approved equal, equipped with a brass plug on top service port, and shall conform to WSDOT/APWA 9-30.3(7).

H. Hydrant Guard Posts

Hydrant guard posts shall be reinforced concrete posts, 8"x8"x6' long, 8” diameter x 6’ long, or 9" diameter x 6' long. The same size and type of guard posts shall be used around each hydrant.

2.3 SEWER SYSTEMS

A. Sewer Pipe and Appurtenances, Non-Pressure

Gravity sewer pipe shall be either PVC Pipe for Non-Pressure (Gravity) Sewer Service or PROTECTO 401 ceramic epoxy lined Ductile Iron pipe as specified herein. Pipes with slopes greater than or equal to twenty (20) percent shall be PROTECTO 401 ceramic epoxy lined Ductile Iron pipe or C-900 PVC. C-905 PVC pipe may be considered for lines which are fourteen (14) inches in diameter or greater.

B. Sewer Pipe and Appurtenances, Pressure

High pressure sewer pipe and appurtenances shall be Ductile Iron or HDPE pipe as specified herein.

C. Side Sewer Pipe, Non-Pressure

1. Gravity side sewer pipe shall conform to the requirements of the Sammamish Plateau Water and Sewer District “Side Sewer Regulations”, latest edition.

2. New side sewer connections on an existing sewer main for a single connection (not in conjunction with a new development) shall conform to the requirements listed below.

    a. For existing D3034 PVC Sewer Main (less than 20 feet in depth), the side sewer connection shall be one of the following:

        - Cut-in PVC side sewer tee

        - Romac “SST” Stainless Steel Tapping Sleeve (w/ stainless steel flange), with FLxMJ adapter with PROTECTO 401 ceramic epoxy lining and gasket sized for D3034 PVC side sewer. Romac side sewer saddle, Model CB, is NOT allowed.

b. For existing C900 PVC Sewer Main (20 feet or greater in depth), the side sewer connection shall be a cut-in tee of one of the following materials:

- C900 PVC side sewer tee with a C900 side sewer up to the transition point to D3034 PVC
- Epoxy-lined ductile iron tee with a C900 side sewer up to the transition point to 4-inch D3034 PVC

c. For existing ductile iron Sewer Main (20 feet or greater in depth), the side sewer connection shall be a cut-in tee of epoxy-lined ductile iron, with a C900 side sewer up to the transition to 4-inch D3034 PVC or Romac "SST" Stainless Steel Tapping Sleeve (w/ stainless steel flange), with FLxMJ adapter with PROTECTO 401 ceramic epoxy lining.

D. Side Sewer Pipe, Pressure

Grinder pump side sewer pipe shall conform to the requirements of the Sammamish Plateau Water and Sewer District "Side Sewer Regulations", latest edition.

E. Low Pressure Mainline Sewer Pipe and Appurtenances

Low pressure mainline sewer pipe shall be either two (2) inch or three (3) inch diameter high-density polyethylene plastic pipe (HDPE SDR 11), conforming to the materials requirements in the Sammamish Plateau Water and Sewer District "Side Sewer Regulations", latest edition.

F. Manholes

Galvanized steel shall not be used in manholes. See Standard Details for material requirements for standard manholes and for deep manholes.

1. Cast Iron Frames and Covers

Cast Iron frames and covers shall conform to the Olympic Foundry Company No. MH 30A Traffic Type or equivalent marked "SEWER" in two (2) inch raised letters. Castings shall conform to the requirements of ASTM A 48, Class 30 and shall be free of porosity, shrink cavities, cold shuts, or cracks or any surface defects which would impair service ability. Repair or defects by welding, or by the use of "smooth-on" or similar material will not be permitted. Cover shall have a maximum of one hole, and a rubber plug per the Standard District Detail shall be installed in the hole.

Manholes located outside of public rights-of-way shall be equipped with a 3-bolt, lockdown cover. All movable parts shall be made of noncorrosive metals otherwise arranged to avoid possible binding. The locking frame and cover shall be Olympic Foundry Company No. MH 30 D/T Traffic Type or equivalent marked "SEWER" in two (2) inch raised letters.

Manhole covers in pedestrian or bike lane areas shall have low embossment lids.

All manholes rings and covers shall be machine finished or ground on seating surfaces so as to assure nonrocking fit in any position, and interchangeability. At the request of the

District, there shall be made available at the foundry standard rings and standard covers for use by inspectors in testing fit and seating.

At the request of the District, there shall be made available at the foundry a testing device suitable for proving the capacity of the assembly to resist an uplift pressure on the lid equal to a 20-foot head.

All manhole frames and covers shall be identified by the name or symbol of the manufacturer. This identification shall be in a plainly visible location when the frame and cover is installed. In addition to the manufacturer's identification, the material shall be identified by the following "NOD" or "DUC" for nodular or ductile iron respectively. The manufacturer's identification and the material identification shall be adjacent to each other and shall be minimum 1/2 inch letters recessed to be flush with the adjacent surfaces.

2. Precast Manhole Components

Precast manhole components shall conform to ASTM C478 except as modified herein. Base section openings to receive pipe shall be circular and held to the minimum size practical to accommodate the pipe to be inserted to effectively seal the joint. Kor-n-Seal boots shall be used for all pipe penetrations. Connections shall conform to WSDOT/APWA 7-05.3. All manholes shall be channeled in the field. Pre-channeled manholes are not permitted.

Where the direction of future extensions from the manhole are known, a 2-foot stub and cap shall be installed in a Kor-n-Seal boot at that location and the manhole shall be channeled to receive the future flow. The 2-foot stub shall be removed and replaced when the future extension is installed.

Precast manhole elements shall be provided with steps and/or ladders such that the completed manhole will contain a continuous vertical ladder with rungs equally spaced at twelve (12) inches plus or minus 3/4 inch. The lowest rung shall be not more than sixteen (16) inches above the shelf, and the uppermost rung shall be not more than eighteen (18) inches below the street surface. Ladder rungs or handholds in the manhole neck area must be recessed 2 inches for improved clearance.

Joints between precast manhole elements shall be rubber gasketed with O-rings or approved equal conforming to AASHTO M198 and shall be grouted on the inside. Shop drawings of the joint design shall be submitted to the District for approval, prior to manufacture or purchase. Completed joints shall show no visible leakage and shall conform to the dimensional requirements of ASTM C478.

Drop manholes, wherever shown on the plans, shall conform in all respects to the requirements for standard manholes as specified above. Pipe and fitting materials shall be ductile iron and shall conform to the specifications for ductile iron pressure sewer main.

Standard precast cones shall provide an eccentric reduction from forty-eight (48) inches to twenty-four (24) inches and shall not be less than seventeen (17) inches in height. Precast cones shall conform to WSDOT/APWA 9-12.4.

3. Manhole Steps

Polypropylene plastic steps shall be a polypropylene plastic step injection molded around a 1/2 inch diameter ASTM A-615, Grade 60, steel reinforcing bar. Step dimensions and pattern shall conform to the WSDOT/APWA 7-03.5.

4. Ladders

Precast manhole base sections shall be provided with a ladder as shown in the Standard Details. Ladders shall be made of the same material as the steps installed in the manhole sections. All ladders shall be subject to approval by the District.

Ladders shall be installed so they are centered on the largest shelf of the manhole or as otherwise directed by the District.

5. Manhole Lining

The manhole into which a force main or low pressure mainline discharges shall be lined 5-9 mils of Tnemec Series 141 Epoxoline or Wasser Aeroshield. In addition, the two manholes downstream of that manhole shall be lined with Tnemec Series 141 Epoxoline or Wasser Aeroshield if installed as part of the same project.

Existing manholes downstream of the force main discharge shall be lined with a material resistant to hydrogen sulfide corrosion, such as Wasser Aeroshield or Tnemec Series 141 Epoxoline. Submit product information for District review.

G. Air And Vacuum Relief Valve Assemblies

Air and Vacuum Relief Valve assemblies, size 2-inch, shall be stainless steel ARI D-020 with flanged connection.

H. Cleanout Assemblies

Cleanout assemblies for private side sewers shall not be allowed in the right-of-way or in private access tracts. Cleanout assemblies shall be brought up to finished grade with a locking cleanout cover (Olympic Foundry No. M-1025, marked “SEWER”). See District Standard Detail.

PART THREE - CONSTRUCTION STANDARDS

3.1 GENERAL

Except as otherwise noted herein, all work shall be done in accordance with the Plans and Specifications approved by the District and as recommended in the applicable American Water Works Association (AWWA) specifications and/or the latest edition of the Washington State Department of Transportation/American Public Works Association, Washington State Chapter (WSDOT/APWA) Standard Specifications for Road, Bridge, and Municipal Construction, and/or the 10 States Standards, and according to the recommendations of the material or equipment manufacturer. In the event of a conflict between the specifications herein, the District shall determine which specification controls. Work shall be done only by contractors licensed and bonded with the State of Washington and experienced in the installation of public water and/or sewer mains.

The District will strictly enforce the erosion and sedimentation control requirements of other agencies. These requirements include, but are not limited to, silt fencing, check dams, catch basin filtration, and removal of debris from sawcuts by appropriate methods such as vacuuming.

Temporary lot numbers, addresses, or building numbers shall be clearly marked on the curb. These numbers are used by the District for side sewer inspections and water meter installations.

No work shall be done until all necessary permits have been received from the agencies having authority.

A preconstruction conference and a minimum of 48-hours notice will be required prior to starting construction.

Inspection shall be by a representative of the Sammamish Plateau Water and Sewer District. All work shall be inspected prior to backfill. All pressure testing shall be done in the presence of the District. The Contractor shall supply all equipment and materials necessary for testing.

ANY APPROVED CHANGES TO THE PLANS AS APPROVED SHALL BE NOTED ON THE CONTRACTOR'S CONSTRUCTION DRAWINGS. THE CONTRACTOR'S MARKUPS SHALL BE PROVIDED TO THE DISTRICT AT THE COMPLETION OF CONSTRUCTION.

All locations of existing utilities shown are approximate and it shall be the Contractor's responsibility to verify the true and correct location so as to avoid damage or disturbance. Separations from potable water mains shall conform to Washington State Department of Ecology's "Criteria for Sewage Works Design".

Separation Between Other Utilities:

Water – in accordance with criteria set forth in DOE guidelines

Storm Sewer – Three (3) foot horizontal clearance

Underground Power, Gas, Telephone and Cable – Three (3) foot horizontal clearance is preferred when utilities are aligned parallel to the water main. In any case where less than

three (3) foot separation occurs, exact measurements to the utility lines shall be provided on the As-Built drawings.

Horizontal distances on construction drawings are measured between centerlines (e.g., centerlines of water fittings, centerlines of sewer manholes, etc.). Actual distances shall be computed at the time of staking.

Pipes Entering Structures – A flexible fitting shall be placed on all lines entering/exiting vaults or other structures, shall be located outside of the structure, and shall be located within five (5) feet of the structure. The flexible fitting shall provide protection from earthquake shaking by providing a point where the difference in vibration rates of the pipe and the structure can be absorbed. For watermains, for example, the fitting shall be a mechanical joint ductile iron sleeve, unless a mechanical joint bell connection occurs within 5 feet of the structure, outside of the structure, in which case the flexible fitting may be omitted.

Repaving shall be in accordance with the requirements of the agency having jurisdiction over the area to be paved. Monuments shall be restored by a Washington State licensed surveyor following completion of the overlay. Monument cases shall conform to King County standards; monument cases of other agencies (such as Snohomish County monument cases) will not be allowed.

A. Alignment

Unless otherwise specified, the location of the water mains, sewer mains, fittings, manholes and other appurtenances shall be staked out by a Washington State licensed surveyor supplied by the Developer/Contractor.

Contractor shall provide survey and layout required to perform the work. In all questions arising as to proper location of lines and grades, the District decision will be final. Cuts to invert of watermain and sewer main shall be shown on staking along with finish grade elevations. Deviations from the alignment shown on the plans must be specifically authorized by the District.

The Contractor's Washington State licensed surveyor shall place offset wood hubs (in soil) and/or steel pins (in asphalt or concrete) showing finished grade and cut depth to invert periodically (at least every 100 feet) along the pipeline alignment, and before and at all changes in alignment vertically or horizontally. Hubs/pins shall be placed far enough in advance of such alignment changes so that the manufacturers and specified deflections can be met. Hubs/pins shall be placed and marked for fittings and provide the District with a cut sheet containing the location, description, and elevation information for all hubs and pins. The Washington State licensed surveyor shall survey the installed invert elevation at the bell end of each piece of pipe and shall provide the District with a cut sheet of the invert elevations.

B. Trench Excavation

Trench excavation shall be in compliance with OSHA and WISHA regulations and requirements and shall meet the following requirements unless otherwise directed by the District or otherwise shown on the District-approved Plans.

Trenches shall be excavated to the line, depth and grade as approved by the District. Unless otherwise directed by Contract Documents or the District, trench excavation shall provide a minimum cover over the pipe of thirty-six (36) inches for water mains, forty-eight (48) inches for sewer mains, or as required to meet the depth requirements of sanitary sewer manholes or other necessary structures. Trench sides shall be excavated vertically. Trench widths shall be adequate for proper working space and the placement of any required bedding material under and around the pipe. The maximum trench width at the crown of the pipe shall be the outside diameter of the pipe barrel plus twenty-four (24) inches. For eighteen (18) inch diameter or larger pipe, the trench width at the crown of the pipe shall not exceed 1.5 times the inside diameter. If these widths are exceeded, a stronger grade of pipe and/or a higher classification and amount of bedding material shall be furnished, as directed by the District. Excavation for manholes or other structures shall be sufficient to provide a minimum of twelve (12) inches between their outer surfaces and the sides of the excavation.

The trench shall be kept free from water until jointing is complete. Surface water shall be diverted so as not to enter the trench. The Contractor shall maintain sufficient pumping equipment on the job to insure that these provisions are carried out. Gravel required in the bottom of the trench due to action of weather or workers shall be furnished by the Contractor. Boulders, rocks, logs, roots and other obstructions shall be entirely removed or cut out to the width of the trench and to a depth six (6) inches below pipe. Where material is removed from below grade, the trench shall be backfilled to grade with material which meets the District's standards for trench foundation gravel, and thoroughly compacted. Trenching operations shall not proceed more than 100 feet in advance of pipe laying.

If the native trench bottoms will provide a firm base for the subsequent placement of bedding, pipe and backfill, such native trench bottom may be used if the bottom is leveled and smoothed so that the entire length of pipe will rest on a well compacted base.

Trench bottoms shall be over-excavated as necessary to remove all unstable soil and eliminate "boiling" or "quick" conditions to such a depth as to provide a firm base. Over-excavated materials shall be replaced with trench foundation gravel as directed by the District. Trench foundation gravel shall be placed in no more than one foot lifts. When trenching operations cut through concrete or asphalt pavement, the pavement shall be removed to a width of eighteen (18) inches greater than the top width of the trench. The concrete shall be cut on a straight line. Asphalt paving shall be cut ahead of the trenching equipment to prevent excessive tearing up on the surfacing and to eliminate ragged edges.

C. Timbering and Sheeting

The Developer and/or Contractor shall provide and install timbering and sheeting as necessary to protect workers, the work, existing buildings, utilities and other properties. All timbering and sheeting above the pipe shall be removed prior to backfilling. All sheeting below the top of the

pipe shall be cut off and left in place. Removal of timbering shall be accomplished in such a manner that there will be no damage to the work or to other properties. All timbering and sheeting shall be to the Developer's design and shall meet all requirements as specified by OSHA and WISHA.

D. Pipe Laying

Each gravity sewer pipe shall be laid with bells upgrade and the invert of the pipe to the alignment and grade shown on the plans. Concentric joints shall be closed and a smooth invert provided.

Open ends of pipe or fittings shall be temporarily capped or plugged at all times.

A laser alignment tool shall utilized for alignment and be capable of self-leveling adjustable line and grade with locking features. The tool shall be inserted into the pipe with a Class IIIA < 5.0mW Laser Diode. For gravity sewers, adjustment to the line and grade shall be done by scraping away or filling in and tamping bedding material under the body of the pipe. No wedging or blocking of the pipe for adjustment to line and grade may be done.

Tees, wyes, elbows, valves, cleanouts, and other appurtenances shall be installed as shown in the standard details herein and at such locations as are shown on the plans or as otherwise directed by the District, and shall not be covered until the District has completed inspection and exact location has been recorded on the project field plan drawings by the Contractor.

For gravity sewers, variance from established line and grade shall not be greater than 1/32nd of an inch per inch of pipe diameter, but shall not exceed ½ inch or result in a level or reverse sloping invert. Variation in the invert elevation between adjoining ends of pipe due to non-concentricity of joining surface and pipe interior surfaces shall not exceed 1/64th of an inch per inch of pipe diameter or ½ inch in any event.

For sewers, the furthest downstream manhole shall be plugged in the downstream side and remain plugged throughout the period of construction, until final acceptance of the project by the District, to prevent debris and/or infiltration from entering the District system.

1. Ductile Iron Pipe

   Pipe laying shall in general conform to AWWA Standard C600 and the manufacturer's recommendations unless specifically contradicted by these Specifications. Special care shall be taken in handling pipe to avoid damaging ends, coatings and linings. Pipe shall be carried in slings and shall not be rolled or dragged. The pipe shall be examined for defects and damage while suspended before lowering into trench. Any damage shall be repaired before pipe is lowered into trench. All pipe shall be poly-wrapped in accordance with AWWA C600. Special care shall be taken to avoid damaging the polywrap during installation and backfilling.

2. PVC Pipe

   PVC pipe shall be bedded by hand with material containing no organic matter and no rocks larger than 3/4". When in the opinion of the District the native material will not meet this requirement, the District may require that bedding material be imported that meets the WSDOT/APWA classification of bedding material, Section 9-03.16. Pipe shall not be dropped or handled roughly and shall be checked for cracks and defects prior to installation. Any cracked or defective pipe shall not be installed.

3. HDPE (Low Pressure Mainline) Sewer Pipe

   HDPE pipe shall meet the installation requirements for PVC pipe. Joints shall be flanged or thermal fusion butt-welded and shall meet the requirements in the District's "Side Sewer Regulations", latest edition. Tracer wire shall be installed with the low pressure mainline to its termination point. A minimum of three (3) feet and a maximum of six (6) feet of cover shall be provided.

4. Contamination Prevention

   All pipe, fittings, and valves shall be carefully cleaned of all dirt and foreign materials as they are placed. The open ends of pipe and fittings shall be plugged with a temporary watertight plug at all times. Groundwater shall be prevented from entering the pipe at all times.

E. Pipe Joints

No joints shall be covered until examined and approved by the District. Joint material shall be installed according to the manufacturer's recommendations.

The pipe shall be properly aligned before the joint is forced home. During insertion of the tongue or spigot the pipe shall be partially supported by hand, sling or crane as required to minimize lateral pressure on the gasket and to maintain concentricity until the gasket is properly positioned. Pipe deflection and straightening shall be avoided once the joint is home, to prevent creep of the joint. Pipe must be constructed upslope.

Pressure shall be applied in making the joint to assure that the joint is home, as defined in the pipe manufacturer's standard instructions for installation. Restraint shall be applied to the line to assure the joints, once home, are held so by tamping fill under and alongside the pipe or by other appropriate means. When pipe laying is not in progress, the last pipe laid shall be plugged and blocked in such a manner as may be required to prevent water and debris from entering the pipe and creep during downtime.

F. Bedding Material Placement

Bedding material shall be placed from a minimum of six (6) inches below the pipe barrel to six (6) inches over the top of the pipe as shown on the standard details herein. Bedding material shall be placed before the pipe is installed and shall be spread smoothly so that the pipe is uniformly supported along the barrel. Subsequent lifts of not more than six (6) inch thickness shall be placed

to six (6) inches over the crown on the pipe and individually compacted to 90% of maximum density.

Removal of shoring or moveable trench shields or boxes shall be accomplished so that the bedding material placement is not disturbed.

In solid rock excavation, all ledge rock, boulders or stones shall be removed to provide a minimum clearance of eight (8) inches under the pipe. All material thus removed shall be replaced with bedding material.

G. Backfilling

No backfilling shall be performed until after the District has inspected the installation of the pipe and approved backfilling.

Native material that meets the requirements of Imported Backfill may be used for trench backfill upon approval by the District. In addition, 100% import backfill will be required for trench backfill during the wet season from October 1 to April 30.

Backfill material shall be moisture-conditioned as necessary to achieve the required compaction as described herein.

Fill and backfill materials to be placed within 6 inches of any structure or pipe shall be free of rocks or unbroken masses of earth materials having a maximum dimension larger than 3 inches. Backfilling shall be performed carefully so that no damage is done to the pipe or to its alignment. The District may direct the contractor to use special backfill techniques when it deems necessary.

Fill, backfill materials shall be selected or processed clean, fine earth, rock, or sand, free from grass, roots, brush, or other vegetation and organic materials. In areas such as existing paving, or in areas to be paved, where the District determines that minor settlement would be detrimental and the native excavated material is not suitable for compaction as backfill, the trench shall be backfilled with Imported Backfill material.

Materials not defined as unsuitable in Part Two – Material Standards are defined as suitable materials and may be used in fills, backfilling, and embankment construction subject to the indicated limitations. Suitable materials may be obtained from on-site excavations, may be processed on-site materials, or may be imported. If imported materials are required to meet the quantity requirements for the project, imported materials shall conform to the suitable material standards herein. Suitable materials are defined in Part Two – Material Standards.

All trenches shall be fully backfilled at the end of each day or, in lieu thereof, shall be covered by heavy steel plates adequately braced and capable of supporting vehicular traffic in those locations where it is impractical to backfill at the end of each day at the District's discretion. Backfilling operations shall not follow more than 100 feet from pipe laying operations. The above requirements for backfilling or use of steel plate will be waived in cases where the trench is located further than 100 feet from any traveled roadway or occupied structure. In such cases, however, barricades and warning lights meeting applicable safety requirements shall be provided

and maintained. All street crossings shall be backfilled with 1 1/4" crushed rock or as otherwise required by the District, or Local Agency (City/King County).

The pipe zone is defined as that portion of the vertical trench cross-section lying between a plane below the bottom surface of the pipe and a plane at a point above the top surface of the pipe as identified on the standard trench section detail. The bedding is defined as that portion of pipe zone backfill material between the trench subgrade and the bottom of the pipe.

Backfill material shall be placed and compacted around and under the pipelines by hand tools, unless otherwise approved by the District, to a height of six (6) inches above the top of the pipe.

The pipe zone shall be backfilled with suitable backfill material as described herein. Care shall be exercised to prevent damage to the pipeline coating, cathodic bonds, and the pipe itself during the installation and backfill operations. If a moveable trench shield is used during backfill operations the shield shall be lifted to a location above each layer of backfill material prior to compaction of the layer. The pipe or backfill shall not be displaced while the shield is being moved.

Backfill material around another utility crossing the water or sewer trench, such as gas, power, and fiber optic, shall comply with the backfill material requirements of that utility.

After the pipe zone backfills have been placed, backfilling of the trench zone may proceed. The trench zone is defined as that portion of the vertical trench cross-section lying as indicated between a plane above the top surface of the pipe and a plane at a point 18 inches below the finished surface grade, or if the trench is under pavement, 18 inches below the roadway subgrade.

Final backfill is all backfill in the trench cross-sectional area within 18 inches of finished grade, or if the trench is under pavement, all backfill within 18 inches of the roadway subgrade.

In addition, all backfill in right-of-way shall meet King County Road Standards, latest edition or appropriate governing authority's requirements.

The remaining backfill material shall be placed and compacted in layers not more than twelve (12) inches thick (two feet loose thickness), except that under roadways all backfill material shall be placed in layers not more than six (6) inches thick and mechanically compacted to the density of the existing subgrade, unless state or county requirements are more stringent. All backfill shall be compacted to 95 percent of maximum density (modified Proctor), unless otherwise directed by the District.

Where compaction densities are specified, measurements of density shall be by the modified AASHTO method. The District may require that an independent laboratory or King County Laboratory be employed to perform in-place density tests as proof of compaction which meets these Specifications. Compaction of native material as trench backfill shall be tested and certified by an independent laboratory. All costs shall be borne by the Developer. At its discretion, the District may request supply samples for testing of any material used in the work.

All test trenches and excavations including excavation, trench support, and groundwater removal for the field soils testing operations shall be provided as required by the District. The trenches

and excavations shall be provided at the locations and to the depths required by the District. Lawn areas destroyed by test trenching and excavation shall be regraded and re-landscaped with sod or hydro seeding as directed by the District.

Compaction testing shall be performed at a frequency of every five feet of depth and every 50 feet or with any changes in soils conditions, equipment, or operator personnel, or as directed by the District.

Regardless of the approval of the District as to manner of compaction, testing, acceptance by the District or otherwise, the Contractor/Developer shall repair any settlement of trenches and excavations that may occur within one year after completion and acceptance of the work by the District.

All pavement trench repair shall be provided in accordance with WSDOT/APWA 5-04.3(5)E and joints, surface smoothness and other related pavement construction shall be provided as specified in WSDOT/APWA 5.04, or as directed by the District.

H. Grade Lines

The contractor shall maintain the correct grades of sewer pipes. All bench marks, reference points and stakes shall be preserved and, in case of destruction of any of them, the resulting expense of restoration shall be borne by the Developer. Laser beam equipment for grade and alignment control shall be required.

I. Boring and Casing

In situations where the pipeline is to be bored, the pipeline shall be placed inside a casing. The casing pipe shall be smooth steel, bare pipe, 0.375 inch minimum wall thickness, and comply with ASTM A139, Grade C, with a minimum steel yield of 36,000 psi. To support the pipe inside the casing, pipe slides, casing spacers or 4" x 4" treated timbers with stainless steel straps shall be used to maintain vertical and horizontal alignment. After installation of the pipe in the casing is complete, the casing void shall be filled with sand or grout and the ends of the casing shall be grouted.

J. Pipe in Fills

Special treatment may be required at the discretion of the District for pipe in fills. This treatment may consist of compacting the backfill in 6-inch layers, careful choice of backfill materials, use of ductile iron pipe in short lengths, or such other reasonable methods or combinations as may be necessary in the opinion of the District.

K. Highway Crossings

This item applies only to rigid surface pavements. The Developer may use any method which provides satisfactory results and is acceptable to the governmental agency having control of the road and to the District, provided that the Developer restores the roadway to its original condition. Normally, highway crossings require the placing of a steel casing by jacking, tunneling or boring

and laying the pipeline within this casing. In case of tunneling, subsequent low pressure grouting through the pavement may be required.

L. Valve Installation

Before installation, valves shall be cleaned of all foreign material as hereinbefore specified for installation of pipe. Such blocking as the District may deem necessary shall be provided.

M. Valve Box Installation

The valve box shall be set centered on the valve operating nut. Valve boxes shall be set flush in pavement. In gravel roads the valve box shall be set in a three (3) foot diameter circular pad of two (2) inch thick asphalt, flush with the gravel surface. Installation of pavers or slip cans to adjust valve boxes to finished grade is not allowed.

N. Valve Marker Posts

Valve marker posts shall be set where required by the District for all valves outside of paved roads, except auxiliary valves for hydrants and Type I blowoffs. The marker shall be set on a line through the valve. The marker shall generally be set on the property line unless the District decides another location is safer or more conspicuous.

O. Concrete Blocking

Concrete blocking with specified material shall be cast in place and have a minimum of 1/4 square foot bearing against the fitting and bearing area against undisturbed soil as shown on the District's Standard Details. Additional bearing area may be required by the District. Blocking shall bear against fittings only and shall be clear of joints so as to permit taking up or dismantling joints. All fire hydrants, bends, tees and valves shall be blocked. All sewer force main bends and valves shall be blocked. The Developer/Contractor shall install blocking which is adequate to withstand full test pressure as well as to continuously stand operating pressures under all conditions of service.

P. Air and Vacuum Release Valve Installation

Location of the air release valves as shown on the Plans is approximate. The installation shall be set at the high point of the line.

Q. Access Roads

Access roads shall be used only where the use of public or private roads to which the District has access is infeasible or unavailable. Use of access roads to water and sewer facilities must be approved by the District. The road surfacing shall be appropriate to the neighborhood (such as gravel, grass-crete, paving, cobblestones, etc.). At a minimum, access roads shall be twelve (12) feet wide designed for H-20 loading, with a minimum of two-and-a-half (2-1/2) inches crushed surfacing base course and one-and-a-half (1-1/2) inches crushed surfacing top course, as defined in WSDOT/APWA Section 9-03.9(3), over a District-approved subgrade compacted to 95 percent relative compaction, unless otherwise approved by the District.

Turnarounds shall be provided at all dead ends, either a hammerhead type with forty-five (45) foot long legs and forty (43) foot inside radii, or circular with a diameter of eighty-five (85) feet. The maximum road grade for gravel access roads shall be 7 percent (7%). If the road grade is greater than seven percent, the access road surfacing shall be paved with asphalt concrete pavement.

R. Painting

1. Exposed parts above ground shall be painted as follows:

   a) Fire hydrants shall be painted with two coats of semi-gloss quick set enamel. The color shall be Safety Yellow.

   b) Hydrant posts, type I blowoff assemblies, water air/vacuum assemblies for water mains and water valve markers shall be painted with two coats of semi-gloss quick set enamel. The color shall be Safety Yellow.

   c) Distance to valves shall be marked with raised Cole numbers on the valve marker, blowoff stem, air vacuum assembly stem or Hydrant. Apply numbers with waterproof Liquid Nail.

   d) Sewer air/vacuum release valve vents shall be painted with two coats of semi-gloss quick set enamel. The color shall be Safety Green.

2. Piping and Appurtenances within Structures:

   a) Water Facilities: One (1) rust resistor prime coat and two (2) coats of semi-gloss quick set enamel. The color shall be Safety Blue.

   b) Sewer Facilities: One (1) rust resistor prime coat and two (2) coats of semi-gloss quick set enamel. The color shall be Safety Green.

3. Vaults:

   The exterior of vaults below grade shall be painted with two (2) coats of black bitumastic solution.

4. Meter Box Location stripes:

   Meter Box Location stripes (3 in. x 12 in.) shall be painted with two coats of semi-gloss, quick set enamel. The color shall be Safety Yellow.

5. Sewer Air/Vacuum Release Valve Vents:

   Two coats of semi-gloss quick set enamel. The color shall be Safety Green.

S. Raising Structures to Grade

The Developer/Contractor shall notify the District prior to raising any water or sewer system structures to grade. All water or sewer system structures (i.e. valves, manholes, clean-outs, monuments, etc) shall be raised within 48 hours of installation of ATB or Asphalt Concrete overlay unless directed by the District to raise said structures sooner.

3.2 WATER SYSTEMS

All water mains shall have a minimum cover of 36 inches below finished grade. Where utility conflicts occur, water mains shall be lowered to clear, except that water mains may not be installed under sewer facilities.

Where more than one fitting occurs in close proximity to each other (i.e., a tee and a valve), the fittings shall be flanged together.

A. Fire Hydrant Installation

Hydrant installation shall generally conform to AWWA Standard C600 unless specifically contradicted by the detail for Fire Hydrant Assembly included in the District's Standard Details. In addition, the fire hydrant run shall be installed with District approved restrained joints. The concrete guard posts as shown on the Standard Detail shall be installed where required by the District. Pumper nozzle shall face the road after installation is completed, unless otherwise specified. Hydrants shall be covered with a bag until operational.

No fences, rockeries, trees, or guardrails shall be installed between the fire hydrant and the main. A minimum of five (5) feet clear zone shall be provided between the fire hydrant and any rockery or structure.

B. Water Service Connections

Connections shall be installed with double strap type pipe saddle that uses stainless steel straps.

Installation shall be as shown in the District Standard Details. Splices or couplings in service lines will not be acceptable.

Draining the water system to install the meter setters will not be allowed. Water services shall be installed so that filings/shavings are removed

C. Meter Box Installations

Meter boxes shall be installed only in unimproved or landscaped areas not subjected to driving or parking. In unimproved or landscaped areas, meter boxes shall be set two (2) inches above the finished grade, including landscaping or mulch. Meter boxes shall be centered over the meter setter(s).

The area surrounding meter boxes shall be backfilled with backfill material conforming to Part 2.1 F (Native Backfill Material) or 2.1 G (Import Backfill Material). Maximum size particle shall be 2 inches. Sand or pea gravel shall NOT be used.

If paved or concrete areas are installed around meter boxes after the meter box is installed, the water service shall be abandoned at the main and a new water service shall be installed perpendicular to the main so that the new meter box is located in an unimproved area not subject to traffic.

Meter boxes may be located in or near driveways or paved areas only with written District approval, or as required by the District. Such meter boxes shall be traffic-bearing boxes as specified on the Standard Details. Meter boxes shall be set flush with concrete or asphalt surfaces (roadway, sidewalk, driveways, driving or parking surfaces, etc.).

When the meter box is installed in concrete paving, a 5/8-inch expansion joint shall be provided around the box with a eighteen (18) inch gap between the expansion joint and meter box on all sides.

Install a water meter marker post at the meter box location until landscaping is completed.

A twelve (12) inch by three (3) inch stripe shall be painted on the ATB or finished asphalt, perpendicular to the edge of the asphalt, to mark the location of each meter box. The color of the stripe shall be as per section 3-1.R(4) "Painting".

No fences, rockeries, trees, or guardrails shall be installed between the meter box and the main.

D. Backflow Prevention (Cross Connection Control)

Where the possibility of contamination of the water supply exists, the District will require that certain services be equipped with a backflow prevention assembly that is approved by DOH. The determination as to the need of a backflow prevention assembly shall be solely determined by the District.

Pursuant to Washington State Regulation WAC 246-290-490 and current District Resolution regulating the District's Cross Connection Program, the District shall receive a Backflow Prevention Assembly Test Report performed by a certified Washington State Tester, prior to acceptance of the system by the District.

Any transfer of water from a District water main to a vehicle or container must have District inspection and approval as to the method and equipment.

Any use of District water for construction purposes must be from a hydrant or other District-approved source with appropriate, District-approved cross connection control. District personnel will inspect the installation for conformance with District requirements.

E. Connections To Existing Water Mains

District standard testing connections shall be installed on new water main construction. Direct connection to the District's existing system shall not be made until the new water main is tested and accepted by the District. Following receipt of satisfactory purity tests, schedule with District (1 week minimum notice) for water main shutdowns. Following completion of new water system construction, testing, and acceptance by the District, remove testing connection and install

segment of ductile iron pipe, length to suit, with two long-pattern sleeves or as directed on the District-approved drawings. Installation and connection to the existing water system shall be with 100% District inspection.

Connections to the end of an existing water main line shall be made with a main line valve, sized the same as the main line size, and new main construction connected to the new valve. Exceptions shall be considered where there is an existing valve in close proximity to the new connection.

Tapping of existing DI pipelines where required by the District, shall be made under pressure with tapping sleeve and valve assembly. Joints shall be tested using normal test pressure prior to start of tapping existing main. District shall determine where tapping under pressure is required. Romac FTS 420, or JCM 412 fusion-bonded, epoxy coated, steel tapping sleeves with Type 316 stainless steel fasteners or approved equal shall be required.

Where cut-ins are to be made in existing pipes, the work shall be conducted at a time specified by District and in such a manner as to minimize the interruption of service. Necessary pipe, fittings and gate valves shall be assembled at the site ready for installation prior to the shutting off of water in the existing main. Once the water has been cut off, the work shall be prosecuted vigorously and shall not be halted until the line is restored to service.

Unless specifically provided for elsewhere in these Specifications, the Developer shall have the responsibility of giving at least 5 business days notice to the District of intention to disrupt service and shall give at least 72 hours notice to the affected water users. Water service shutdowns shall not be scheduled on Mondays or Fridays.

F. Operation of District Valves

Developer/Contractor shall not operate any valves, including fire hydrant valves, in any part of the District's water system, except in the presence of the District. **Developer and/or Developer's Contractor shall be fined for tampering with the District's water system if valves are operated without the District being present.** Developer shall notify the District 48 hours in advance of need to operate system.

3.3 SEWER SYSTEMS

A. Manholes

Precast manhole base sections shall be placed on a well-compacted bedding course of bedding material. The depth of the bedding shall be four (4) inches thick or greater, extending a minimum of twelve (12) inches beyond the outside perimeter of the base section. The balance of any remaining excavated area shall be filled with imported backfill material and well-tamped to the level of the top of the bedding before the manhole is set in place. The bedding shall be well-tamped and made smooth and level to assure uniform contact and support of the precast elements.

All lift holes (inside and outside) and the inside face of rubber gasket joints between precast sections shall be thoroughly wetted and then filled with grout, smoothed and all joints pointed.

Precast sections shall be placed and aligned to provide vertical sides and vertical alignment of ladder rungs. Eccentric cone shall be positioned to allow vertical access to the ladder. The completed manhole shall be rigid, true to dimension and watertight.

Manholes eight (8) feet and less in depth shall have cones a maximum of two (2) feet in height.

Manholes twenty (20) feet or greater in depth shall conform to the Deep Manhole detail on the Standard Details.

Manholes set in paved streets or other paved areas shall be set flush with finished grade of the paving and when required, the manhole frame shall be tilted to conform to the grade on the paved surface.

Manholes set in gravel shoulders or other non-paved improved areas shall be set flush with the finished grade and in an asphalt apron six (6) feet in outside diameter. The asphalt apron shall be tapered per the Standard District Details. The manhole frame shall be tilted to conform to the grade of the finished surface.

Manholes not set in paved or improved areas shall be set at a finished grade six (6) inches to twelve (12) inches higher than the surrounding terrain to prevent surface water infiltration into the system, unless plans specify otherwise. Manholes shall be surrounded by an asphalt apron as shown on the Standard Details.

Manholes installed in wet areas shall have additional measures added to ensure no water infiltration. Consult with District for requirements.

Manhole channels shall be made to conform to the sewer grade and shall be brought together with well-rounded junctions. Channel sides shall be carried up vertically to the top of the largest pipe's diameter and rounded to the shelf at the largest pipe's crown elevation. The concrete shelf shall be smoothly finished with slopes to drain.

The openings through which pipes come into the manhole shall be completely and thoroughly grouted. A watertight joint (Kor-n-Seal boot or approved equal) shall be provided where the pipe passes through the manhole wall.

B. 6-Inch Side Sewer from Main to Property Line

The strength class of side sewer pipe shall be the same as the sewer pipe to which it connects and these specifications shall be applicable to side sewer work.

The slope of side sewers shall not exceed one (1) foot vertical to one (1) foot horizontal when using SDR 35 D3034 PVC, nor be less than 2 percent . If ductile iron or C900 piping is used along with the corresponding change in mainline material, then slope is allowed a maximum of two (2) foot vertical to one (1) foot horizontal nor be less than two percent. When change in slope between connecting pipes exceeds two (2) inches per foot, standard 1/8 bends shall be used. All side sewers shall be plugged and plugs blocked.

The end of all side sewers at the property lines shall be marked with a vertical twelve (12) foot long, 2"x4" board, the bottom of which shall be located at the invert of the elevations of the side sewer and top of which shall be painted white and extend above the ground. The board shall be wrapped from one end to the other with a 12 AWG insulated wire. The wire shall be securely wrapped around the end of the side sewer. The word "SEWER" shall be stenciled in two (2) inch high black letters on the upper end of the board. Depth to invert shall be clearly shown on the board. For inverts that are deeper than 12 feet, the boards shall be extended to at least 4 feet above finish grade and the corresponding measurements to invert shall also be clearly shown.

C. Connection to the Existing Sewer System

Extensions to the District's sewer system shall be isolated from the existing system with a plug installed at the existing manhole in the presence of District personnel and maintained by the Developer until the sewer extension is accepted by the District. **Developer and/or Developer's Contractor shall be fined for tampering with the District's sewer system if the plug is removed or a connection is made without the District being present.** Developer shall notify the District 48 hours in advance of need to install or remove plug or connect to the system. No connections shall be made to the existing sewer system without the presence of the District. Written application for connection shall be made to the District, and the connection shall be made at a time agreed upon with the District.

1. Connections to existing manholes shall be made as follows:

   a) If the manhole is "live", the manhole channel shall be tightly covered to prevent debris from entering the sewer line prior to breaking into the manhole wall. Immediately after the connection is made, the new pipe shall be plugged and blocked in such a manner that no water shall enter into the existing manhole. The plug shall not be removed without permission of the District. Additional upstream plugs may be required by District.

   b) If the existing manhole is not "live", a plug shall be installed in the downstream or discharge pipe of the existing manhole in addition to the above. Where new connections to existing manholes require an outside drop, two plugs for each drop shall be installed and blocked.

   c) The existing manhole shall be rechanneled

2. Connections to existing sewer main shall be made as follows:

   a) The existing line shall be cut and removed from the manhole excavation. A new manhole shall be installed in place of the removed existing line. The manhole shall be precast, minimum 48-inch diameter. The manhole shall be placed with a full stick of pipe centered through the manhole and coupled to both ends of the existing sewer line. The new sewer line inside the manhole shall be cut out and the manhole channeled. Sewage must be bypassed during channelling.

3. Connections of side sewers to an existing sewer line shall be made as follows:

   a) The connection to an existing sewer main shall be made with a cut in tee with slip couplings. If the connection is made to the existing sewer pipe while in operation, the existing sewer pipe shall be cut with a saw or approved equal to give a smooth beveled edge of the proper size and the lip shall be filed smooth. Each connection shall be bedded with a minimum of six (6) inches of bedding material. Unsuitable foundation material shall be over-excavated and replaced with bedding material.

   b) Alternatively, the connection shall be made with Romac "SST" Stainless Steel Tapping Sleeve (with stainless steel flange), with Protecto 401 FLxMJ adapter and gasket sized for appropriate side sewer pipe material; or an Insert-a-Tee. Romac side sewer saddle, Model CB, is NOT allowed.

D. Side Sewers (Gravity or Pressure)

Gravity or pressure (grinder pump) side sewers shall be installed and tested in accordance with the Sammamish Plateau Water and Sewer District "Side Sewer Regulations", latest edition.

E. Use of Ductile Iron Pipe for Sewers

The contractor shall furnish repair kits and shall repair the PROTECTO 401 ceramic epoxy lining damaged during installation, welding and/or field cutting operations.

F. Lift Stations

Lift stations shall be installed per District-approved plans and specifications. Lift stations shall be tested with representatives of the District, Developer, Contractor and all sub-contractors involved with the lift station present. Developer/Contractor shall furnish the District with three (3) copies of the Operation and Maintenance Manuals for the Lift Station in labeled binders.

3.4 TESTING FOR WATER AND SEWER PIPELINES

A. Hydrostatic Tests For Ductile Iron Water and Sewer Mains

Ductile iron water and sewer main installations shall be subjected to a hydrostatic pressure test of 250 PSI for a minimum of 15 minutes, before leakage measurement starts. Location of the test pump shall be approved by the District. It shall then be held at this pressure, without pumping, and any leaks or imperfections developing under said pressure shall be remedied by the Contractor before final acceptance of the work. Leakage shall be measured by approved means in the presence of the District. The Contractor shall provide all necessary equipment to allow the District's inspectors to use their gauges and equipment and shall perform all work connected with the tests. Tests shall be made after corporation stops and service lines are installed, and the trench is backfilled and compacted. All valves within the section being tested shall be open, if possible. No more than 1,500 feet of 8-inch main can be tested at one time. Butterfly valves shall be tested at 150 psi above the static water pressure, with a maximum pressure of 250 psi unless otherwise noted.

Allowable leakage in gallons per fifteen minutes per 1,000 feet of pipe:

2" - 0.06 gallons	8" - 0.24 gallons	14" - 0.42 gallons	20" - 0.59 gallons
4" - 0.12 gallons	10" - 0.30 gallons	16" - 0.48 gallons	24" - 0.71 gallons
6" - 0.18 gallons	12" - 0.36 gallons	18" - 0.54 gallons	

B. Hydrostatic Tests For HDPE Water and Sewer Mains

HDPE water and sewer main installations shall be subjected to a hydrostatic pressure test of 1.5 times the rated operating pressure of the pipe. Location of the test pump shall be approved by the District. To establish equilibrium, the pipe shall be raised to the test pressure and allowed to stand without makeup pressure for 2 to 3 hours to allow for expansion of the pipe, unless otherwise approved or directed by the District. After equilibrium is established, the test section shall be pressurized to 1.5 times the rated operating pressure of the pipe. The pump shall be turned off and the final test pressure shall be held for 1, 2, or 3 hours as determined by the District at the time of testing. The amount of "make up" water shall be measured in the presence of the the District Inspector, utilizing a District-approved method. The allowable amounts of make up water for expansion during the leak test are as listed below (US Gallons / 100-feet of pipe):

Nominal Pipe Size (inches)	1 – Hour Test	2 – Hour Test	3 – Hour Test
3	0.10	0.15	0.25
4	0.13	0.25	0.40
6	0.30	0.60	0.90
8	0.50	1.00	1.50
10	0.80	1.30	2.10
11	1.00	2.00	3.00
12	1.10	2.30	3.40
14	1.40	2.80	4.20
16	1.70	3.30	5.00
18	2.00	4.30	6.50
20	2.80	5.50	8.00
22	3.50	7.00	10.50
24	4.50	8.90	13.30
28	5.50	11.10	16.80
32	7.00	14.30	21.50
36	9.00	18.00	27.00
42	12.00	23.10	35.30
48	15.00	27.00	43.00

Under no circumstances shall the total time under the test exceed eight (8) hours at 1.5 times the pressure rating. If the test is not completed due to leakage, equipment failure, etc., the test section shall be allowed to "relax" for eight (8) hours prior to the next test.

Any leaks or imperfections developing under said pressure shall be remedied by the Contractor before final acceptance of the work. The Contractor shall provide all necessary equipment to allow the District's inspectors to use their gauges and equipment and shall perform all work connected with the tests. Tests shall be made after corporation stops and service lines are installed. All valves within the section being tested shall be open, if possible.

C. Sterilization and Flushing Of Water Mains

Flushing of the water mains is to clean and sterilize the mains. Cleaning includes the flushing at a velocity and volume that will remove rocks and debris from the main.

Sterilization of water mains shall be accomplished by the Contractor in accordance with the requirements of the State Department of Health (DOH) and in a manner satisfactory to the District. During pipe installation the Contractor shall install chlorine granules per manufacturer's specifications to achieve a chlorine concentration of not less than 50 PPM. When a chlorine concentration of not less than 50 PPM has been established throughout the line, the valves shall be closed and the line left undisturbed for 24 hours. The line shall then be thoroughly flushed and water samples taken for approval by the local health agency.

If the main fails to pass purity tests the following procedure shall be followed. The section to be sterilized shall be thoroughly flushed at maximum flow prior to chlorination. Flushing shall be done in the presence of the District. Sections will ordinarily be sterilized between adjacent gate valves unless, in the opinion of the District, a longer section may be satisfactorily handled. Chlorine shall be applied by solution feed at one end of the section with a valve or hydrant at the opposite end opened sufficiently to permit a flow through during chlorine application. The chlorine solution shall be fed into the pipeline already mixed by an automatically proportioning applicator so as to provide a steady application rate of not less than 60 ppm chlorine. Hydrants along the chlorinated section shall be opened during application until the presence of chlorine has definitely been detected. When a chlorine concentration of not less than 50 ppm has been established throughout the line, the valves shall be closed and the line left undisturbed for 24 hours. The line shall then be thoroughly flushed and water samples taken for approval by the local health agency. Chlorination shall be repeated until water samples test satisfactory. The Contractor shall exercise special care in flushing to avoid damage to surrounding property.

The Contractor shall be responsible for disposal of treated water flushed from mains and shall neutralize the wastewater for protection of aquatic life in the receiving water before disposal into any natural drainage channel.

D. Cleaning And Jetting Of Sewer Mains

Prior to sewer pipe testing, all pipes and manholes shall be completely cleaned by jetting and vactoring. All debris from the jetting shall be removed at the first manhole where presence of

the debris is noted. In event that cemented or wedged debris or damaged pipe cannot be dislodged by jetting, the obstruction shall be removed and/or repaired. No debris or jetting water shall be permitted to enter the existing sewer system.

E. Testing Of Non-Pressure Sewer Pipe

Testing, which includes CCTV Inspection, of all non-pressure sewer pipe shall be conducted on a manhole-to-manhole basis. Testing for District's approval shall only be allowed after all other nearby utilities have been installed and their trenches backfilled and compacted, all manholes have been channeled, and all manholes and sewer mains have been cleaned as discussed above in Subsection D.

All wyes, tees and ends of side sewer stubs shall be plugged with gasketed caps or plugs, or an alternate acceptable to the District and securely fastened to withstand the internal test pressure. Such plugs or caps shall be readily removable.

If any section of the sewer system is found to have deficiencies or fails to pass a test, the Contractor shall locate and repair any and all deficiencies or substandard work. After all repairs are made, the Contractor shall retest the full run of sewer main, manhole-to-manhole, at the District's sole discretion. All work, testing and retesting, under this section shall be completed at the Developer's or Contractor's expense.

Final Approval of the sewer system is conditional on successful completion of all tests and Inspections.

1. Pressure Testing: All runs of non-pressure sewer pipe shall be air tested at 4 psi. The procedures set forth in this section shall be employed in conducting the testing. All facilities and personnel for conducting the testing under the observation of the District shall be furnished by the Developer and/or Contractor. All equipment and personnel to conduct the test shall be subject to the approval of the District. Although air testing may be performed for the convenience of the contractor prior to backfilling, no pipe shall be accepted until air tests have been performed after backfilling and compacting. The installed pipe shall be tested with low pressure air as set forth in WSDOT/APWA 7-17.3(2)F.. All test gauges shall be brought to the surface and allow District personnel to verify the testing without entering the manhole structure.

2. Deflection Testing: All sanitary sewers constructed of flexible pipe shall be deflection-tested not less than 30 days after the trench backfill and compaction has been completed. The test shall be conducted by pulling a solid-pointed mandrel with a diameter equal to 95% of the pipe diameter through the completed pipeline.

3. Infiltration Testing: The District may require an infiltration test if it appears that there is excessive infiltration after air tests are completed. The District shall also be the sole judge of whether or not this test is required. The maximum allowable limit for infiltration shall be as per WSDOT/APWA 7-17.3(2)C. Failure to pass the infiltration test shall be cause for rejection.

4. Television/CCTV Inspection: The District shall require all runs of sewer pipe to be inspected by the use of a television camera not less than 30 days after the trench backfill and compaction has been completed. The costs of making all inspections and re-inspections, shall be borne by the Developer or Contractor.

   a. CCTV Equipment:

      1) Television inspection equipment shall have an accurate footage counter that will display on the monitor and record the camera distance from the centerline of the starting manhole.

      2) The camera shall be of the remotely operated pan and tilt type. The rotating camera and light head configuration shall have the capability of panning 360° with pan and tilt capability of providing a full view of the pipe to ensure complete inspection of the mainline pipe and service laterals.

      3) The camera, television monitor, and other components shall be color. To ensure peak picture quality throughout all conditions encountered, the color camera shall be equipped with the necessary circuitry to allow for the remote adjustment of the optical focus iris from the power control unit at the viewing station. A variable intensity control of the camera lights shall also be located at the viewing station.

      4) Lighting and camera quality shall be suitable to allow a clear, in-focus picture for the entire inside periphery of pipelines extending at least ten (10) feet in front of the camera. In High Density Polyethylene (HDPE) or ductile iron poly-lined pipe, lighting should be sufficient enough to provide a clear view at least two (2) feet in front of the camera. The replay of the recorded video information shall be free of electrical interference and shall provide a clear stable image.

      5) Camera quality shall be suitable to provide a full 360° view of the pipe during the inspection.

      6) The travel speed of the camera shall be variable but uniform and shall not exceed 30 feet per minute. Any means of propelling the camera through the sewer line which would produce non-uniform or jerky movement of the camera, will not be acceptable.

      7) The television system shall be capable of performing line segment inspection in increments of 400 feet with one setup.

      8) The District's 1-1/2" target, or the contractor's District-approved target, shall be used

   b. CCTV Procedure:

      1) Just prior to performing the video inspection procedure, dyed water must be introduced into the nearest upstream manhole until observed at the nearest downstream manhole. This will insure that any pipe segments with bellies are easily

identified during CCTV inspection. Introduction of the dyed water shall be recorded.

2) All fog shall be evacuated from the pipeline and the pipeline kept clear of any fog during the CCTV inspection process.

3) Perform the inspection on all mainline sections from manhole to manhole.

4) Should access to a particular sewer segment be difficult, and where adjacent segments require television inspection, the CCTV Contractor may be allowed to complete the inspection of multiple sewer line segments with one setup. When multiple sewer line segments are inspected utilizing one setup, the CCTV Contractor shall zero the footage counter at each subsequent sewer manhole to establish a uniform starting point for each line segment televised

5) The interior of the pipe shall be carefully inspected to determine the location and extent of all deficiencies. Pipe conditions that result in a question of proper installation procedures shall be noted so that these conditions can be reviewed and, if necessary, corrected before actual acceptance of the sewer system.

6) At all service connections, the camera shall be stopped and the pan and tilt features shall be used to obtain a clear picture. At each service lateral, the camera shall be panned to view up each lateral or point of connection. Make note of any deficiencies through the use of Data Collection Software.

7) Prior to the beginning of each CCTV inspection, manhole identification numbers, as indicated on the record drawings, will be displayed in the title and shall become a part of the video record.

8) As directed by District, the Developer's Engineer or thier representative, the camera shall be stopped to view and analyze conditions that appear unusual or uncommon. The CCTV inspection technician shall, at all times, be able to move the camera through the lines in either direction without the loss of quality in the video presentation

c. The television-inspection format shall be provided on DVD in a MPEG file type that is able to be viewed using Windows Media Player, with separate MPEG files individually designated between each sewer run between manholes and listed on an index or menu. The file names shall reflect the manhole numbers on the plan for each sewer run between manholes. The associated television-inspection reports and the original DVDs shall be provided to the District immediately upon completion of the television-inspection. If contractor wants a copy, the contractor shall obtain one at same time as the original is completed. Provide the District with two copies of the written report for each sewer run between manholes.

F. Hydrostatic Tests For Pressure Sewer Pipe

After the trench is backfilled and compacted, all pressure sewer pipe shall be subjected to a hydrostatic pressure test in accordance with the test for the applicable pipe material, as specified previously in this section. All facilities and personnel for conducting the testing under the observation of the District shall be furnished by the Developer/Contractor and shall be subject to the approval of the District.

G. Testing For Low Pressure Mainline Sewers And Grinder Pump Systems

Testing shall conform to the requirements in the District's "Side Sewer Regulations", latest edition.

3.5 ABANDONMENT OF WATER AND SEWER FACILITIES

A. Abandonment of Water Mains

Water mains and valves to be abandoned shall be abandoned in accordance with the procedures listed below, so as to minimize the risk of leaking from abandoned valves and to minimize obstructions within the right-of-way. If an active water main that has an abandoned valve attached to it will be abandoned in the foreseeable future, as determined solely by the District, the abandoned valve can remain and its valve can and valve box shall be raised to finished grade, in accordance with A.1 below. However, if the valve is a double disc valve or if it is leaking, it must be removed in accordance with A.2 below. If an active water main that has an abandoned valve attached to it will NOT be abandoned in the foreseeable future, as determined solely by the District, the abandoned valve must be removed and the tee plugged or blind-flanged, in accordance with A.2 below.

1. For Abandoned Water Valve to Remain:
   a. Turn valve to the closed position.
   b. Remove valve box and valve can.
   c. Inspect valve for longevity of leaking from packing, etc.
   d. If valve is not leaking, cut out section of main from old valve.
   e. Install MJ plug or blind flange on valve.
   f. Plug old pipe with concrete. If pressure build-up from ground water entering the abandoned pipe is likely to occur (especially on hillsides), install a blocked MJ cap.
   g. Re-install the valve box and valve can, and install 6" grout in valve can to indicate a plugged valve.
   h. Backfill and compact.

2. For Abandoned Water Valve to Be Removed:
   a. Schedule a water main shutdown.
   b. Turn valve to the closed position.
   c. Remove valve box and valve can.

d. Cut out section of main from old valve.

e. Remove valve, and install blind flange or MJ plug on tee.

f. Plug old pipe with concrete. If pressure build-up from ground water entering the abandoned pipe is likely to occur (especially on hillsides), install a blocked MJ cap.

g. Backfill and compact.

B. Abandonment of Fire Hydrants

Fire hydrants to be abandoned shall be abandoned in accordance with the procedures listed below, so as to minimize the risk of leaking from abandoned valves and to minimize obstructions within the right-of-way. If an active water main that has an abandoned hydrant foot valve attached to it will be abandoned in the foreseeable future, as determined solely by the District, the abandoned foot valve can remain and its valve can and valve box shall be raised to finished grade, in accordance with B.1 below. However, if the valve is a double disc valve or if it is leaking, it must be removed in accordance with B.2 below. If an active water main that has an abandoned foot valve attached to it will NOT be abandoned in the foreseeable future, as determined solely by the District, the abandoned foot valve must be removed and the tee plugged or blind-flanged, in accordance with B.2 below.

1. For Abandoned Foot Valve to Remain:
   a. Turn 6-inch valve to the closed position.
   b. Remove valve box, valve can, and fire hydrant.
   c. If valve is not leaking, remove entire 6-inch pipe to hydrant, or cut out at least a 1-foot section of main from old valve.
   d. Install MJ plug or blind flange on valve.
   e. If hydrant run is not removed, plug both ends of hydrant run pipe with concrete.
   f. Re-install the valve box and valve can, and install 6” grout in valve can to indicate a plugged valve.
   g. Backfill and compact.
   h. If the existing hydrant is to be relocated due to some conflict, a new hydrant will be installed. The existing hydrant shall be delivered to the District’s offices.

2. For Abandoned Foot Valve to Be Removed:
   a. Schedule a water main shutdown.
   b. Turn valve to the closed position.
   c. Remove valve box, valve can, and fire hydrant.
   d. Remove entire 6-inch pipe to hydrant, or cut out at least a 1-foot section of main from old valve.
   e. Remove valve, and install blind flange or MJ plug on tee.
   f. If hydrant run is not removed, plug both ends of hydrant run pipe with concrete.

g. Backfill and compact.

h. If the existing hydrant is to be relocated due to some conflict, a new hydrant will be installed. The existing hydrant shall be delivered to the District's offices.

C. Abandonment of Water Services

Water services must be abandoned at the water main in accordance with the following procedure:

1. Excavate to corporation stop and saddle.
2. If saddle is a single strap or is not stainless steel or the stainless steel strap/saddle/corporation stop is in poor condition, schedule a water main shutdown, then replace the saddle with a stainless steel repair band.
3. If the saddle is a stainless steel double strap in good condition, it can remain in place. Shut off the corporation stop and plug the abandoned service line. Polybag all exposed components of the abandoned saddle.
4. Install a brass plug on the corporation stop.
5. On the setter side, cut the service line away from the setter, plug the line, remove the setter and dispose of properly (return to District and place in recycle bin).
6. Arrange with the District's Customer Service Department for disposition of the water meter and documentation of the last meter reading.
7. Backfill and compact.

D. Abandonment of Manholes or Vaults

Manholes, vaults, and similar underground structures must be abandoned in accordance with the following procedure:

1. Remove frame and cover or vault lid and hatch(es).
2. Remove manhole cone and sections or vault sections as necessary so that remaining structure is at least 4 feet below finished grade.
3. Plug all pipe penetrations with grout.
4. Fill remaining structure with pea gravel to within 3.5 feet of the top of the remaining structure.
5. Fill the next 3.5 feet (to the top of the remaining structure) with CDF.
6. Backfill and compact the top 4 feet with suitable native material or import backfill to finished grade.

E. Abandonment of Pressure Sewers (Force Mains, Low Pressure Force Mains, and Grinder Pump Lines)

All pressure sewer lines, including force mains, low pressure force mains, and grinder pump lines, must be abandoned in accordance with the following procedure:

1. Force mains, low pressure force mains, and grinder pump lines that are to be abandoned should be flushed in a sanitary way to eliminate a septic condition, if possible.

2. Mains shall be physically disconnected from District's system and plug all forcemains larger than 2 inches in diameter with grout. Plug or cap all pipe ends 2 inches or smaller.
3. If pressure build-up from groundwater entering the abandoned force main or low pressure force main is likely to occur (especially on hillsides), install a blocked cap or plug on pipe 4 inches or larger, and install a watertight connection (e.g., pack joint) for pipe smaller than 4 inches.
4. Possible pressure grouting of abandoned main may be required on a case-by-case basis.

F. Abandonment of Gravity Side Sewers

All gravity side sewer lines must be abandoned in accordance with the following procedure:

1. Side sewer shall be physically disconnected from District's system.
2. A plug shall be installed in the side sewer tee at the sewer main.
3. A cap shall be installed on both ends of the side sewer.

PART FOUR - DISTRICT STANDARD DETAILS AND NOTES

The following details are also shown on the District Standard Details Drawings (22” x 34” format).

WATER DETAILS

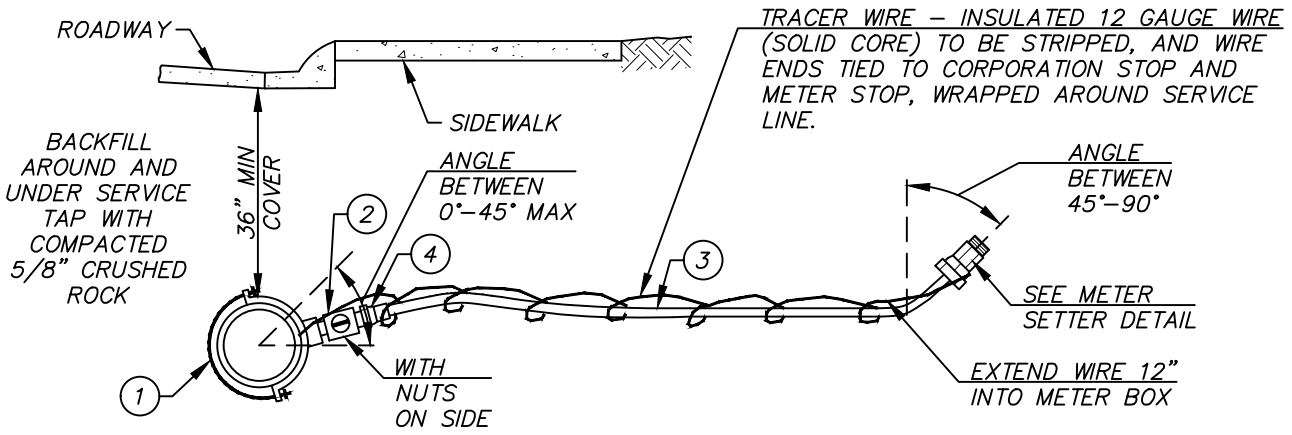

ITEM	DESCRIPTION	FORD PART NO	MUELLER PART NO	A.Y. MCDONALD	OTHER PART NO.	QTY
1	1" SADDLE I.P.T.	N/A	N/A	N/A	ROMAC 202S	1
2	1" CORPSTOP (MIPxMIP)	FB500–4	B2996	3131B1	N/A	1
3	1" HDPE PIPE	—DRISCOPLEX 5100 ULTRA LINE SDR7 200 PSI IPS OR PW EAGLE—				1
4	1" FIPxCOMPRESSION ADAPTOR	C16–44P	H15454.10	4754–33	N/A	2
	W/ STAINLESS STEEL STIFFENER	INSERT 53–72	505142	6136	N/A	2

* QUICK JOINT ACCEPTABLE, GRIP JOINT NOT ACCEPTABLE

1" SERVICE LINE

REV. 10/19/17

NOTES

1. ALL PIPE AND FITTINGS TO BE ASSEMBLED WITH TEFLON TAPE AND PIPE DOPE UNLESS OTHERWISE NOTED.
2. SERVICE LINES SHALL BE INSTALLED PERPENDICULAR TO THE WATER MAIN.
3. THE SERVICE LINE SHALL BE INSTALLED TO ALLOW FOR THE FAR SIDE OF THE METER BOX TO BE INSTALLED ON THE R/O/W AND CENTERED ON THE PROPERTY LINE OR EASEMENT LINE, UNLESS OTHERWISE DIRECTED BY THE DISTRICT.
4. THE METER BOX SHALL BE INSTALLED WITH THE FAR SIDE OF THE METER BOX (BACK SIDE) ON THE R/O/W, PROPERTY LINE OR EASEMENT LINE, IN LANDSCAPED (NON–TRAFFIC, NON–CRUSHED SURFACING TOP COARSE, NON–CONCRETE) AREAS.
5. BACKFILL AROUND METER BOXES AND SETTERS SHALL BE WITH IMPORTED BACKFILL, OR WITH NATIVE MATERIAL THAT MEETS THE REQUIREMENTS FOR IMPORTED BACKFILL, EXCEPT THAT 100% SHALL PASS 2" SQUARE. PEA GRAVEL OR SAND ARE NOT ALLOWED.
6. PROVIDE AT LEAST 18–INCHES CLEARANCE FROM ALL OTHER UTILITIES, BUSHES, AND OBSTRUCTIONS. PROVIDE AT LEAST 5–FEET FROM ALL TREES, AND STRUCTURES. NO FENCES OR ROCKERIES SHALL BE PLACED BETWEEN THE METER BOX AND THE MAIN.
7. METER BOXES LOCATED WITHIN 2 FEET OF DRIVEWAYS, PAVED AREAS, OR AREAS WHERE THE BOX CAN BE SUBJECTED TO VEHICULAR TRAFFIC, SHALL BE A TRAFFIC BEARING METER BOX AS NOTED BELOW. LOCATING A METER BOX IN AN AREA SUBJECT TO VEHICULAR TRAFFIC REQUIRES WRITTEN DISTRICT APPROVAL DURING DESIGN. METER BOXES THAT BECOME LOCATED IN TRAFFIC AREAS DURING OR AFTER CONSTRUCTION WITHOUT DISTRICT WRITTEN APPROVAL DURING DESIGN SHALL BE ABANDONED AT THE MAIN AND A NEW SERVICE SHALL BE INSTALLED TO A LANDSCAPED (NON–TRAFFIC) AREA.
8. WHERE TRAFFIC BEARING METER BOXES ARE USED WITHIN A CONCRETE SURFACE, A 5/8 INCH EXPANSION JOINT SHALL BE PROVIDED AROUND THE BOX WITH AN EIGHTEEN (18) INCH GAP BETWEEN THE EXPANSION JOINT AND METER BOX ON ALL SIDES.
9. APPROVED METER BOXES SHALL BE AS FOLLOWS:
   A) APPROVED METER BOXES FOR SINGLE SERVICES IN NON–TRAFFIC AREAS: CARSON 1220–12
   B) FOR SINGLE SERVICE IN TRAFFIC AREAS: FOGTITE B10 W/ALUMINUM LID.
10. MAINTAIN AND LEAVE SERVICE MARKER IN PLACE UNTIL LANDSCAPING IS DONE.
11. ANY DEVIATION FROM THESE ABOVE STANDARDS SHALL REQUIRE A WRITTEN VARIANCE REQUEST TO THE DISTRICT FOR REVIEW AND CONSIDERATION.

REV. 10/27/17

WATER SERVICE NOTES AND METER BOX REQUIREMENTS

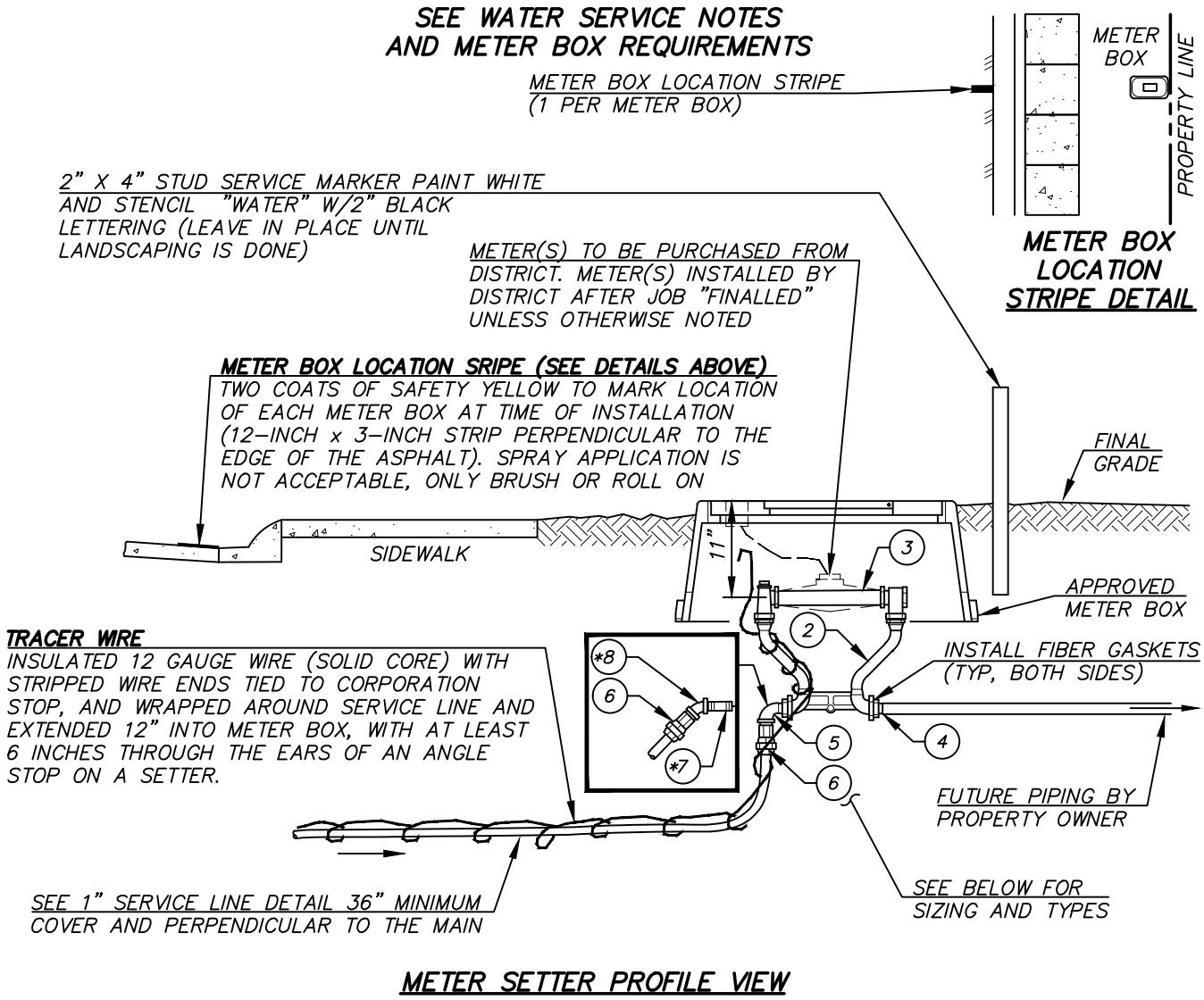

METER SETTER PROFILE VIEW

SINGLE 3/4" METER SETTER

ITEM	DESCRIPTION	FORD PART NO	MUELLER PART NO	A.Y. MCDONALD	OTHER PART NO	QTY
1	NOT REQUIRED					–
2	3/4" METER SETTER	VBH72-12W-11-33-NL	N/A	N/A	N/A	1
3	1" x 7-1/2" IDLER W/WASHERS	PVC SCH 80				1
4	3/4" PVC PLUG	PVC SCH 40/80				1
5	3/4" BRASS 90° STREET ELL					1
6	3/4" MIP x 1" IPS PAC JOINT W/ STIFFENER	FOC8634	H15429	473-CP	N/A	1
*7	3/4" x 3" BRASS NIPPLE (OPTIONAL)					1
*8	3/4" BRASS 45° BEND OR ELL (OPTIONAL)					1

SINGLE 1" METER SETTER

ITEM	DESCRIPTION	FORD PART NO	MUELLER PART NO	A.Y. MCDONALD	OTHER PART NO	QTY
1	NOT REQUIRED					–
2	1" METER SETTER	VBH74-12W-11-44-NL	N/A	N/A	N/A	1
3	1-1/4" x 11" IDLER W/WASHERS	PVC SCH 80				1
4	1" PVC PLUG	PVC SCH 40/80				1
5	1" BRASS 90° STREET ELL					1
6	1" MIP x 1" IPS PAC JOINT W/ STIFFENER	FOC8644	H15429	473-CP	N/A	1
*7	1" x 3" BRASS NIPPLE (OPTIONAL)					1
*8	1" BRASS 45° BEND OR ELL (OPTIONAL)					

* OPTIONAL 1

3/4" AND 1" METER SETTER REV. 10/27/17

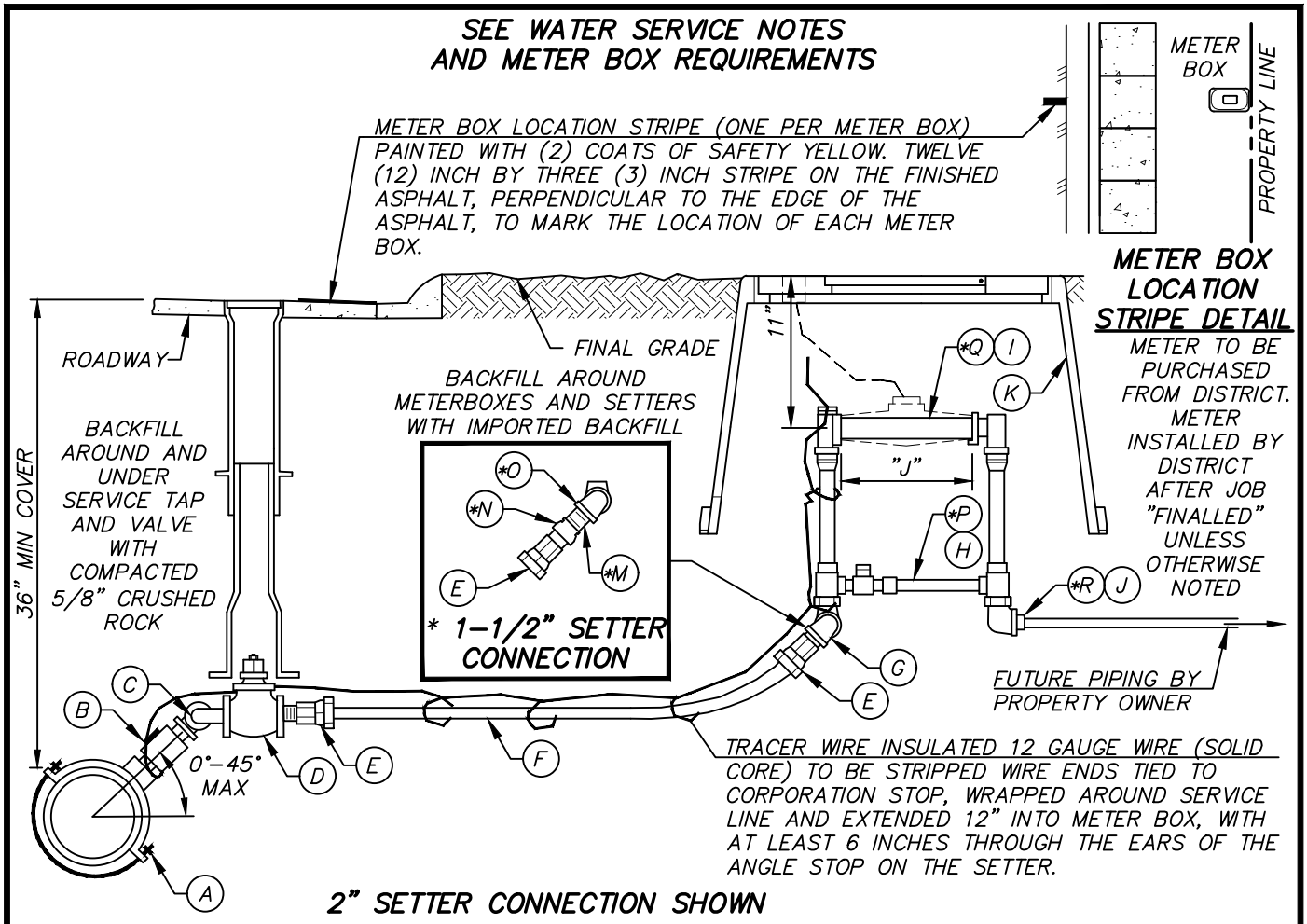

NOTES

1. ALL PIPE AND FITTINGS TO BE ASSEMBLED WITH TEFLON TAPE AND PIPE DOPE UNLESS OTHERWISE NOTED.
2. METER BOXES LOCATED WITHIN 2 FEET OF DRIVEWAYS, PAVED AREAS, OR AREAS WHERE THE BOX CAN BE SUBJECTED TO VEHICULAR TRAFFIC OR AT THE DIRECTION OF THE DISTRICT, SHALL BE A FOGTITE TYPE 2 METER BOX WITH A STEEL REINFORCED LID.
3. WHERE TRAFFIC BEARING METER BOXES ARE USED WITHIN A CONCRETE SURFACE, A 5/8 INCH EXPANSION JOINT SHALL BE PROVIDED AROUND THE BOX WITH AN EIGHTEEN (18) INCH GAP BETWEEN THE EXPANSION JOINT AND METER BOX ON ALL SIDES.
4. METER BOXES TO BE INSTALLED IN NON TRAFFIC AREAS. ALTERNATIVE LOCATIONS REQUIRE WRITTEN DISTRICT APPROVAL.
5. METER BOXES SHALL BE INSTALLED WITH THE FAR SIDE OF THE BOX (BACK SIDE) ON THE R/O/W, PROPERTY OR EASEMENT LINE, UNLESS OTHERWISE DIRECTED BY THE DISTRICT. SERVICES SHALL BE INSTALLED PERPENDICULAR TO THE WATER MAIN.

ITEM	QTY	DESCRIPTION
A	1	2" ROMAC SADDLE IPT, STYLE #202S, DOUBLE STRAP
B	1	2" CORPORATION STOP MIP X MIP, W/ NUT ON TOP (FORD# FB500, MUELLER# B2996, A.Y. MCDONALD# 3131B)
C	2	2" BRASS STREET ELBOW (SWING JOINT)
D	1	2" (RSGV) GATE VALVE X FIP W/SQUARE OPERATING NUT W/ CAST IRON VALVE BOX AND LONG SKIRT LID
E	1	2" PACK JOINT W/STAINLESS STEEL STIFFENER X MIP (FORD# C86-77, MUELLER # E15929)
F	VARIOUS	DRISCOPLEX 5100 ULTRA LINE OR PW EAGLE, 2" HIMOL POLY PIPE SDR-7 200 PSI
G	2	2" 90° BRASS STREET ELBOW
H	1	2" METER SETTER, FORD NO. VBH 87-12B-11-77 (ONLY) W/ BRASS STREET 90
I	1	2" IDLER SCH. 80 (J= 17") W/WASHERS
J	1	2" PVC PLUG, SCHEDULE 40/80
K	–	METER BOX – CARSON JUMBO #1730 W/P5L METER READING LID AND INSPECTION PLATE (MARKED FOR WATER) FOR NON TRAFFIC AREAS. WITH WRITTEN DISTRICT APPROVAL FOGTITE TYPE 2 (MARKED FOR WATER) W/ STEEL REINF. LID FOR TRAFFIC AREAS.
*M	1	1-1/2" x 3" BRASS NIPPLE
*N	1	1-1/2" x 2" BELL REDUCER
*O	2	1-1/2" 90° BRASS STREET ELBOW
*P	1	1-1/2" METER SETTER, FORD NO. VBH 86-12B-11-66 W/ BRASS STREET 90 OR VBH 76-12B
*Q	1	1-1/2" IDLER SCH. 80 (J=13") W/ WASHERS
*R	1	1-1/2" PLUG, SCHEDULE 40/80

1-1/2" AND 2" METER SETTER REV. 10/19/17

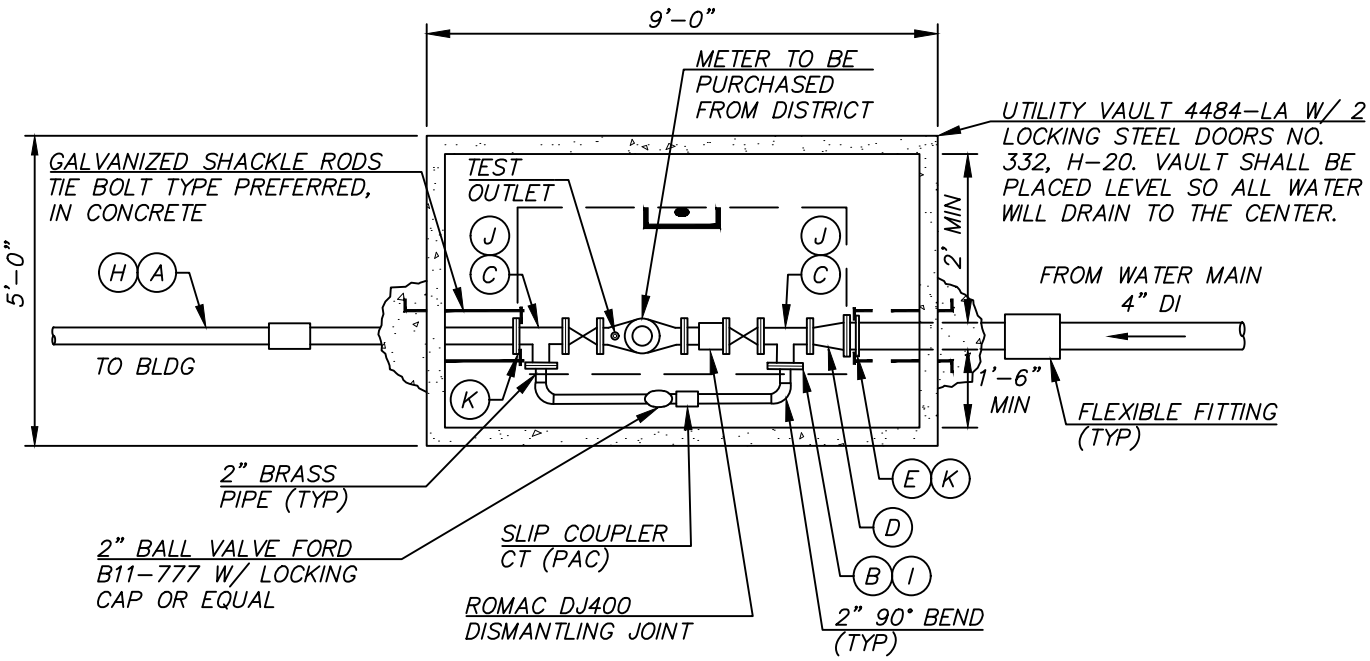

PLAN

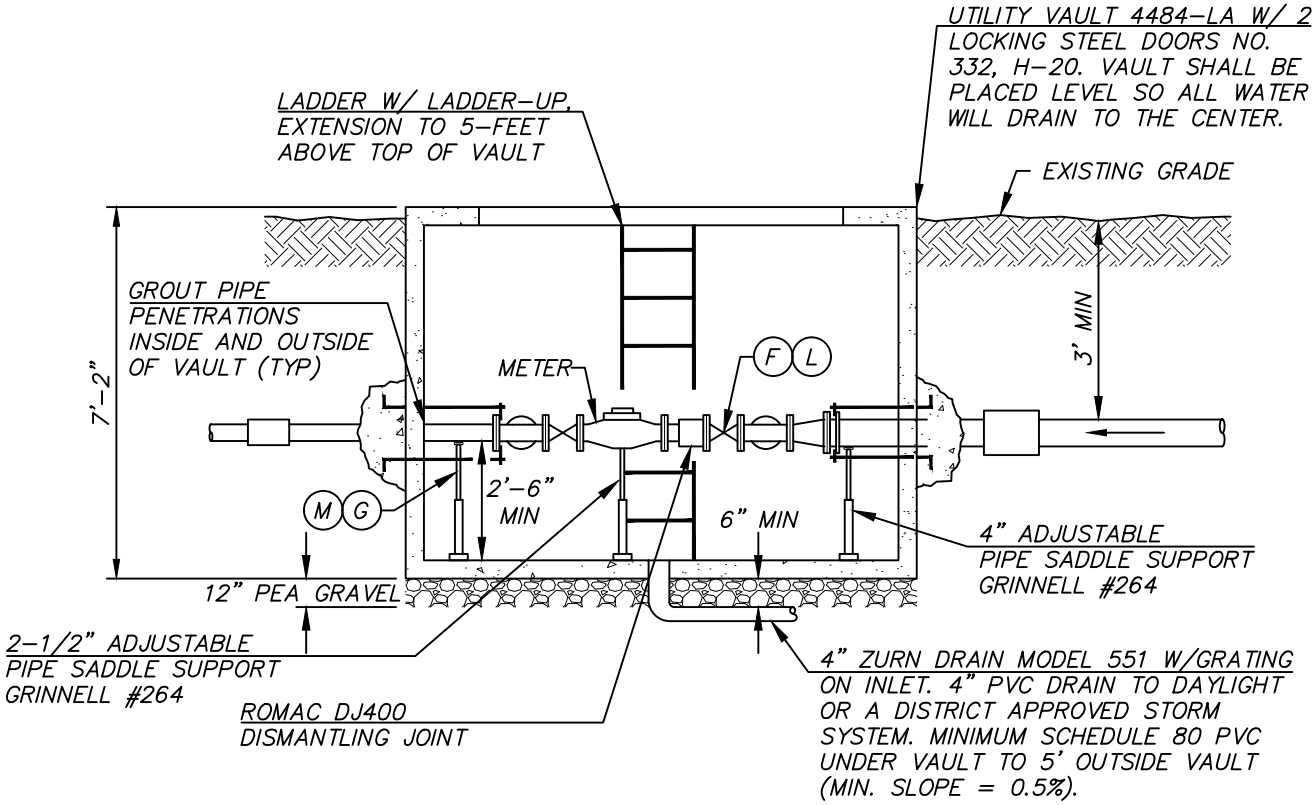

ELEVATION

NOTES

1. SEE 3" AND 4" METER NOTES AND MATERIALS FOR ADDITIONAL CONSTRUCTION REQUIREMENTS.
2. DISTRICT SUPPLIED METER IS A 3" OR 4" WITH TRPL REGISTER (TOUCH PAD MOUNTED IN VAULT LID).

3" AND 4" METER REV. 10/20/17

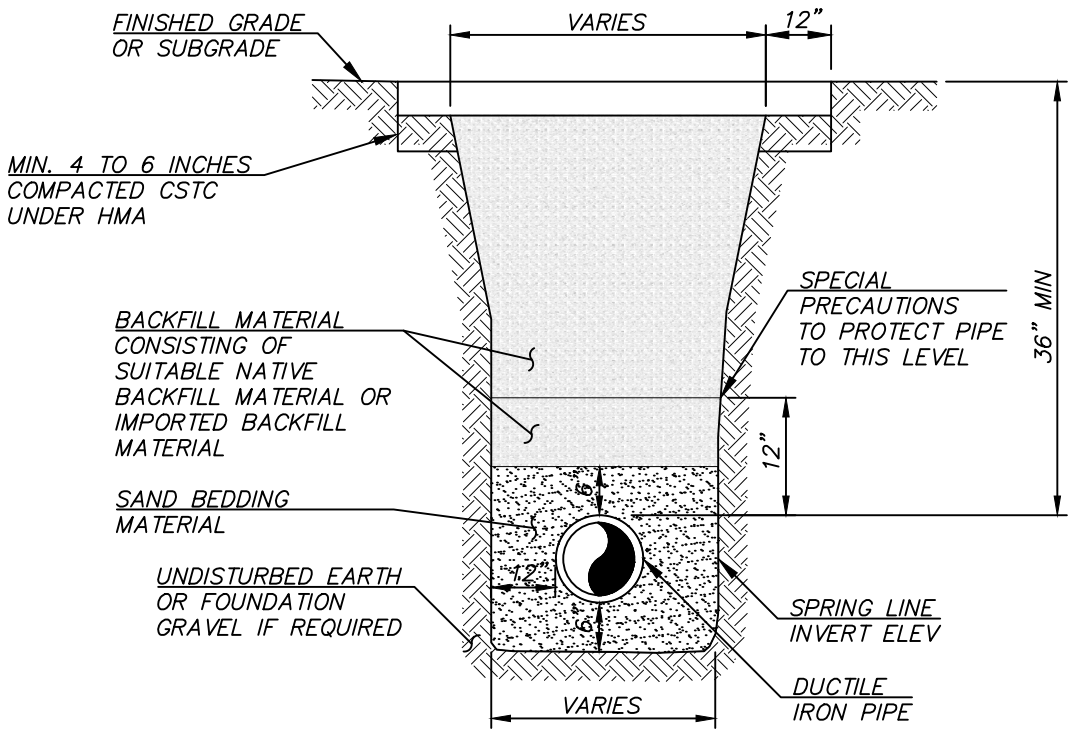

WATER MAIN TRENCH SECTION

REV. 10/30/17

◯	3" METER (ONLY)	⬡	4" METER (ONLY)
A	3" GALV	H	4" DI
B	3" BLIND FLG TAPPED 2" (2 PLACES TYP)	I	4" BLIND FLANGE TAPPED 2" (2 PLACES TYP)
C	3" TEE (FLG)	J	4" TEE (FLG) (TYP)
D	4" x 3" REDUCER (FLxFL)	K	4" FCA (TYP)
E	4" FCA (TYP)	L	4" GATE VALVE (FLG) W/HAND WHEEL OPERATOR (TYP)
F	3" GATE VALVE (FLG) W/HAND WHEEL OPERATOR (TYP)	M	4" ADJUSTABLE PIPE SADDLE SUPPORT GRINNELL #264
G	3" ADJUSTABLE PIPE SADDLE SUPPORT GRINNELL #264		

NOTES

1. VAULT COVER SHALL MATCH EXISTING GRADE OR 6" ABOVE IN UNIMPROVED AREAS.

2. PAINT SCHEDULE:
   EXTERIOR OF VAULT – BELOW GRADE TWO COATS OF BLACK BITUMASTIC SOLUTION (VAULT SHOULD BE DRIED WITH NO MOISTURE PRESENT PRIOR TO APPLICATION OF COATINGS)

   PAINT INTERIOR PIPING (NON BRASS) – ONE (1) COAT RUST RESISTOR PRIMER TWO (2) COATS SAFETY BLUE SEMI GLOSS PAINT

3. IF POSITIVE DRAINAGE FROM VAULT CANNOT BE ACHIEVED A SUMP PUMP SYSTEM WILL BE REQUIRED WITH DISTRICT APPROVAL. POWER SHALL BE SUPPLIED AND MAINTAINED BY THE DEVELOPMENT.

4. FLEXIBLE FITTING WHEN ENTERING AND EXITING VAULT WITHIN 5 FEET OF VAULT. IF (MJ) BELL CONNECTION IS WITHIN 5 FEET OF THE VAULT, FITTING MAY BE OMITTED (2 PLACES TYPICAL).

5. CORE DRILL 1–3/4" HOLE IN ONE OF THE HATCHES NEAR CENTER FOR INSTALLATION OF A ANTENNAE MOUNT, WHEN NOT IN TRAFFIC AREA.

6. USE 2" THREADED BRASS AND UNION AS NEEDED.

3" AND 4" METER NOTES AND MATERIALS

REV. 10/30/17

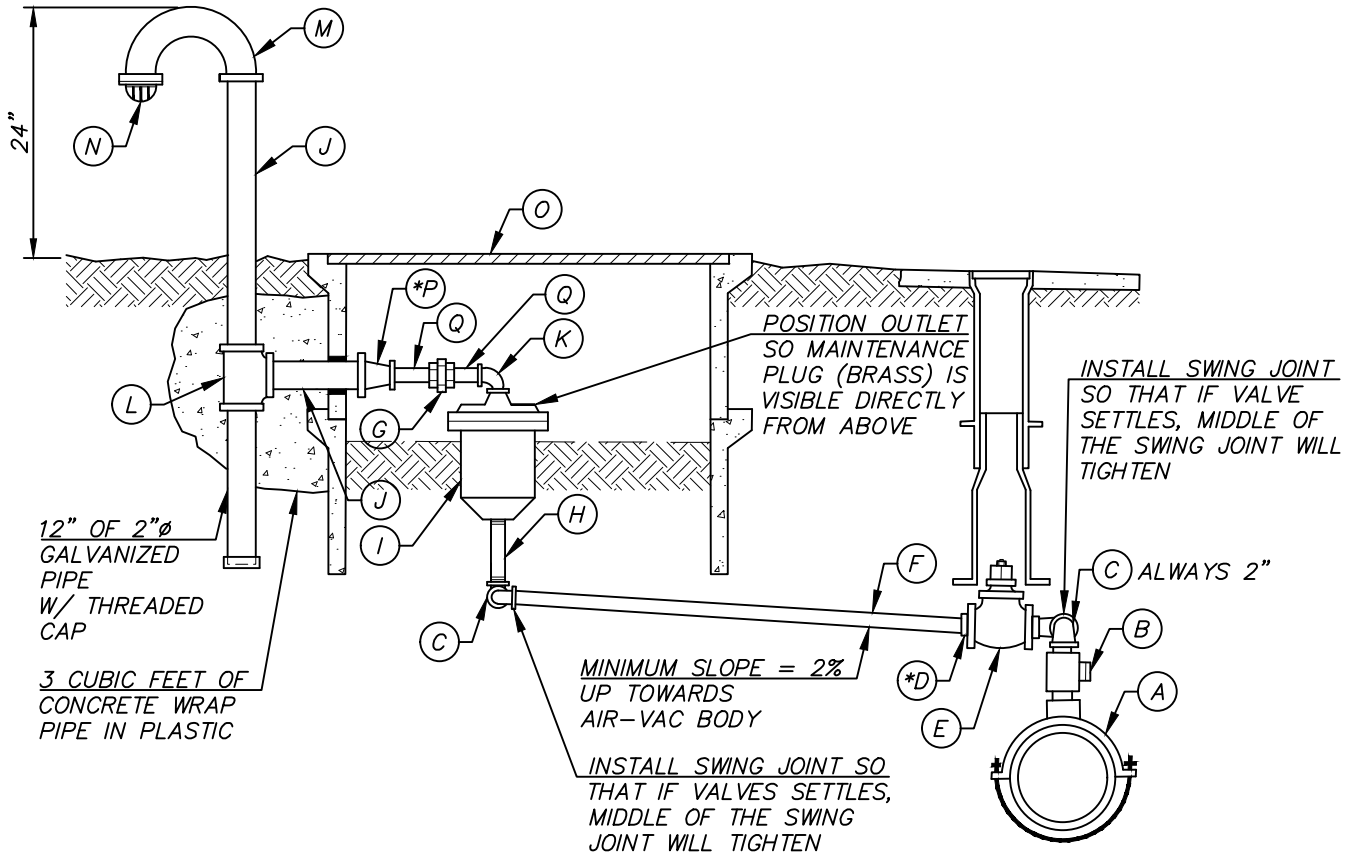

NOTES

1. ALL PIPE AND FITTINGS TO BE GALVANIZED EXCEPT WERE NOTED AND ASSEMBLED WITH TEFLON TAPE AND PIPE DOPE.
2. LOCATION OF THE AIR AND VACUUM RELIEF ASSEMBLY AS SHOWN ON THE PLANS IS APPROXIMATE.
3. INSTALLATION OF THE VALVE SHALL BE SET AT THE HIGH POINT OF THE LINE.
4. PAINT CANE ASSEMBLY WITH TWO (2) COATS OF SAFETY YELLOW AND APPLY COLE LETTERS TO CANE ASSEMBLY WITH FOOTAGE TO VALVE ON SIDE FACING ROADWAY IN 1.5" COLE NUMBERS. APPLY WITH WATER PROOF LIQUID NAILS.
5. PROVIDE 5-FOOT OF CLEARANCE FROM TREES, AND STRUCTURES, 18-INCHES FROM BUSHES.

MK	QTY	ITEM
A	1	2" ROMAC SADDLE I.P.T., DOUBLE STRAP STYLE 202S
B	1	2" CORPORATION STOP MIP X MIP, WITH NUT ON SIDE (NOT UNDER VALVE)
C	4	1" OR 2" BRASS STREET ELBOW, BRASS SWING JOINT W/ COUPLING OR 90° BEND
*D	1	2" X 1" BRASS BUSHING
E	1	2" GATE VALVE (FIP x FIP) W/2" SQUARE OPERATING NUT AND CAST IRON VALVE BOX AND LONG SKIRT LID
F	–	1" OR 2" THREADED BRASS PIPE (LENGTH TO SUIT) ON FIRM SUBGRADE
G	2	1" OR 2" GALVANIZED UNION
H	1	1 OR 2" BRASS NIPPLE
I	1	1" OR 2" APCO AIR AND VACUUM RELIEF VALVE (#143-C FOR 1" AND #145-C FOR 2") OR DISTRICT APPROVED EQUAL (REPLACE IRON ACCESS PLUG WITH BRASS PLUG)
J	–	2" GALVANIZED SCH. 40 PIPE (LENGTH TO SUIT)
K	1	1" OR 2" GALVANIZED STREET 90° ELBOW
L	1	2" TEE
M	1	2" RETURN BEND, SCH. 40 GALVANIZED
N	1	BEEHIVE STRAINER GREENBURG P-24-08, MALE FOR 2" PIPE
O	2	FOGTITE TYPE II CONCRETE BOX WITH STEEL LID, REINFORCED FOUR SIDES OR DISTRICT APPROVED EQUAL MARKED "A.V."
*P	1	2" X 1" GALVANIZED BELL REDUCER (NOT REQUIRED WITH A 2" ASSEMBLY)
Q	2	1" OR 2" GALVANIZED NIPPLE (ONLY ONE REQUIRED WITH 2")

* DENOTES ITEMS NOT REQUIRED WITH A 2" ASSEMBLY

1" AND 2" AIR AND VACUUM RELIEF VALVE ASSEMBLY REV. 10/20/17

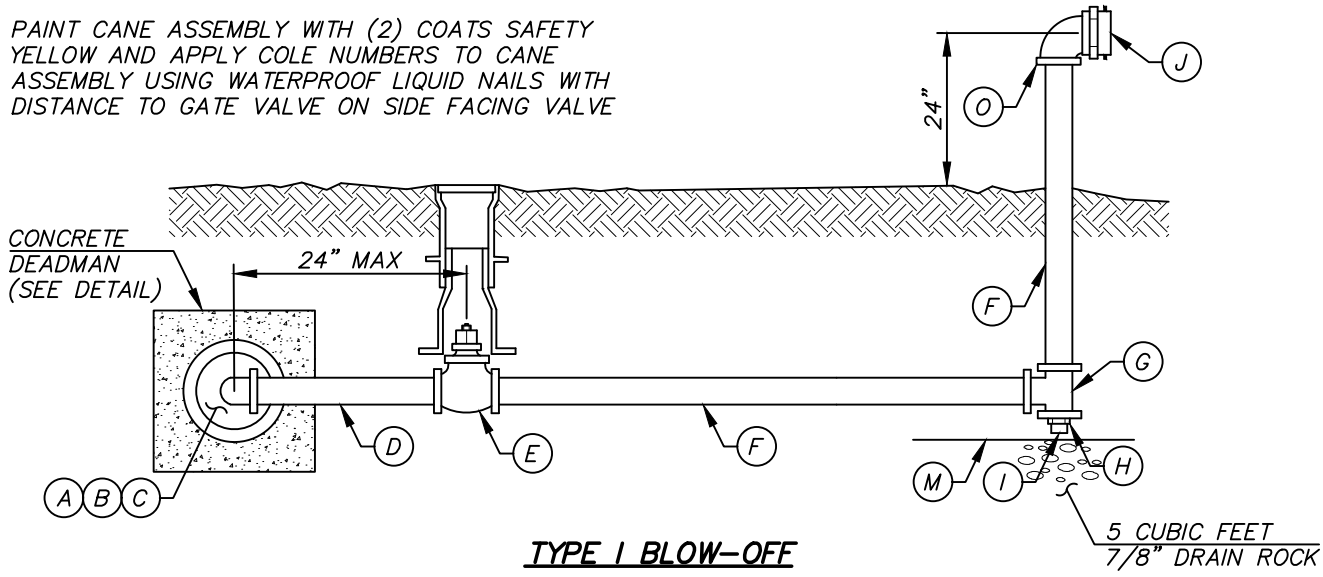

TYPE I BLOW-OFF

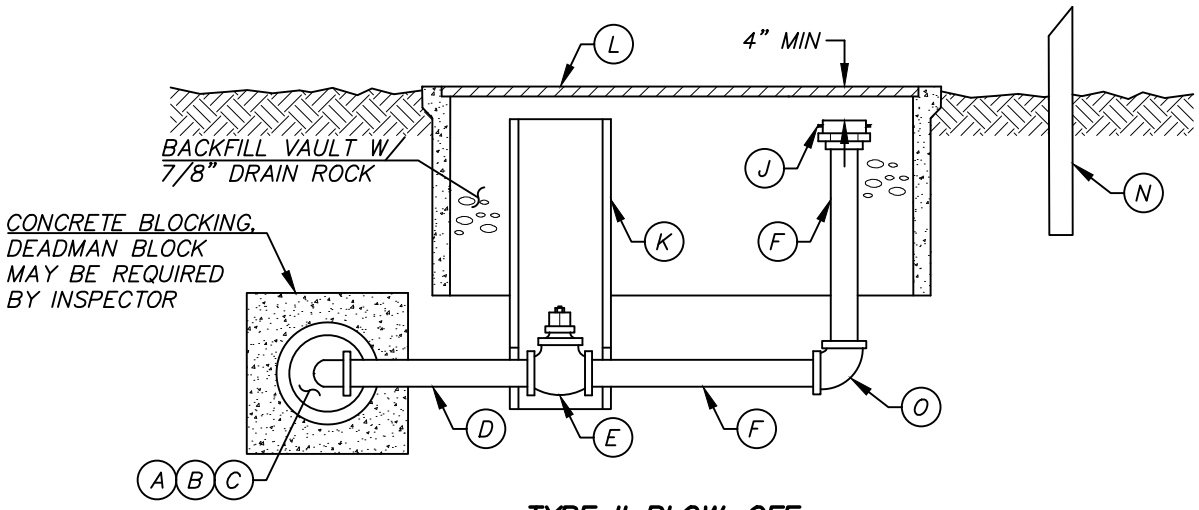

TYPE II BLOW-OFF

NOTE

1. ALL PIPE AND FITTINGS TO BE GALVANIZED EXCEPT WHERE NOTES AND ALL ASSEMBLED WITH TEFLON TAPE AND PIPE DOPE.

ITEM	TYPE I QTY	TYPE II QTY	DESCRIPTION
A	1	1	CAP W/ 2" IPS TAP
B	1	1	2" X 6" BRASS NIPPLE
C	1	1	2" 90° BRASS BEND
D	–	–	2" BRASS PIPE (LENGTH TO SUIT)
E	1	1	2" GATE VALVE W/SQUARE OPERATING NUT TYPE I REQUIRES CAST IRON VALVE BOX W/ DEEP SKIRT LID, TYPE II WITH 6" PVC PIPE ONLY
F	–	–	2" GALVANIZED IRON PIPE (LENGTH TO SUIT)
G	1	0	2" X 2" TEE
H	1	0	2" X 1/2" BUSHING
I	1	0	AUTOMATIC DRAIN VALVE – WEATHERMATIC 910
J	1	1	2" MIP X 2 1/2" NST FIRE HOSE ADAPTOR W/CAP TYPE 1 (MIP) , TYPE II (FIP) W/ 2" COUPLER
K	0	1	6" PVC (LENGTH TO SUIT)
L	0	1	FOGTITE TYPE 2 METER BOX W/ 3/8" SOLID STEEL TRAFFIC COVER (REINFORCED ON FOUR SIDES) AND H-20 LOADING MARKED "B.O."
M	–	–	FABRIC OR PLASTIC BARRIER
N	0	1	VALVE MARKER POST
O	1	1	2" 90° GALV. BEND

TYPE I AND II BLOW-OFF ASSEMBLY REV. 10/20/17

NOTES

1. FIRE HYDRANT BOLLARDS SHALL NOT BE INSTALLED WITHIN RIGHT-OF-WAY UNLESS OTHERWISE DIRECTED BY THE DISTRICT.
2. FIRE HYDRANT BOLLARDS SHALL BE INSTALLED WITHIN COMMERCIAL DEVELOPMENTS UNLESS OTHERWISE DIRECTED BY THE DISTRICT.
3. THE NUMBER OF BOLLARDS AND PLACEMENT OF BOLLARDS SHALL BE SUFFICIENT TO PROTECT THE FIRE HYDRANT FROM VEHICULAR TRAFFIC AND AS DIRECTED BY THE DISTRICT.
4. "BLUE DOT" (STIMSONITE RAISED PAVEMENT MARKER-#88AB) REQUIRED 6" OFF CENTERLINE (OR 4" OFF ANY OTHER MARKER" OF ROAD PERPENDICULAR TO FIRE HYDRANT.
5. FIRE HYDRANT AND BOLLARDS SHALL BE PAINTED WITH (2) COATS OF SAFETY YELLOW SEMI GLOSS.
6. DISTANCE FROM CENTER OF HYDRANT TO ISOLATION VALVE CAP SHALL BE SHOWN ON BONNET OF HYDRANT IN FEET (TO THE CLOSEST FOOT) USING COLE NUMBERS AND APPLIED WITH WATERPROOF LIQUID NAILS.

APPROVED FIRE HYDRANTS:
DRESSER M&H 129-S
MUELLER A423 (SUPER CENTURION 250)
CLOW MEDALLION
AMERICAN DARLING B-62-B
AVK SERIES 2780
U.S. PIPE SENTINEL 250

DEADMAN ASSEMBLY MAY BE REQUIRED ON RUNS OVER 20' OR CHANGE IN GRADE

OPTIONAL HYDRANT INSTALLATION MAY BE REQUIRED AS INSPECTOR DEEMS NECESSARY

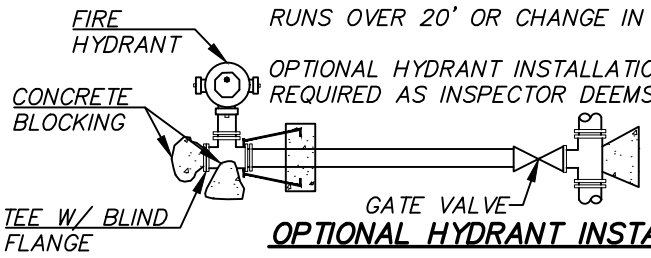

OPTIONAL HYDRANT INSTALLATION

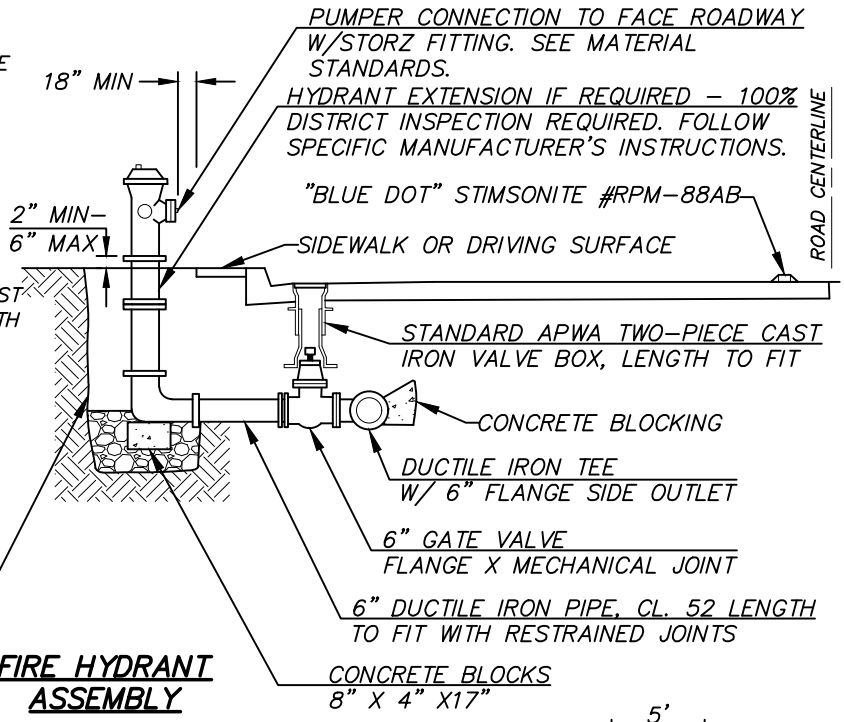

PLASTIC BARRIER REQUIRED BETWEEN HYDRANT AND WASHED ROCK 1 CU. YD. TO ABOVE WEEP HOLES OF HYDRANT MINIMUM 7/8" DRAIN ROCK.

FIRE HYDRANT ASSEMBLY

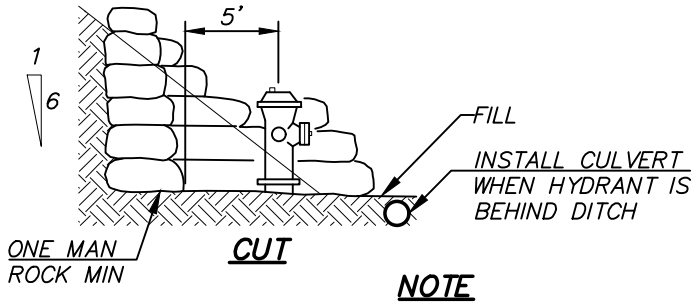

CUT

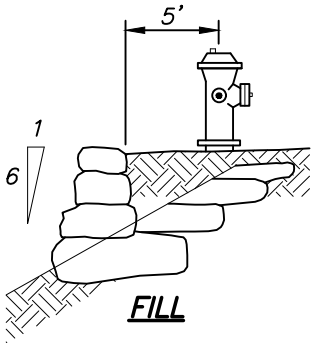

FILL

NOTE

1. 5' MIN CLEARANCE AROUND FIRE HYDRANT

FIRE HYDRANT LOCATION IN CUT OR FILL

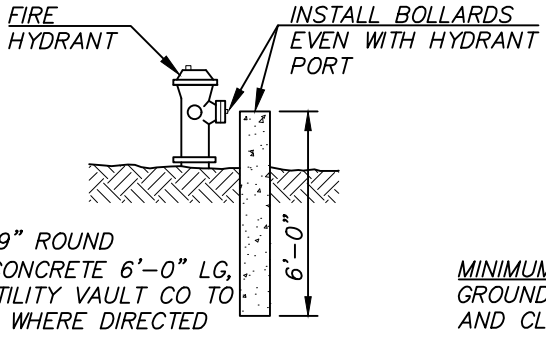

GUARD POST 9" ROUND REINFORCED CONCRETE 6'-0" LG, EQUAL TO UTILITY VAULT CO TO BE INSTALLED WHERE DIRECTED

ELEVATION

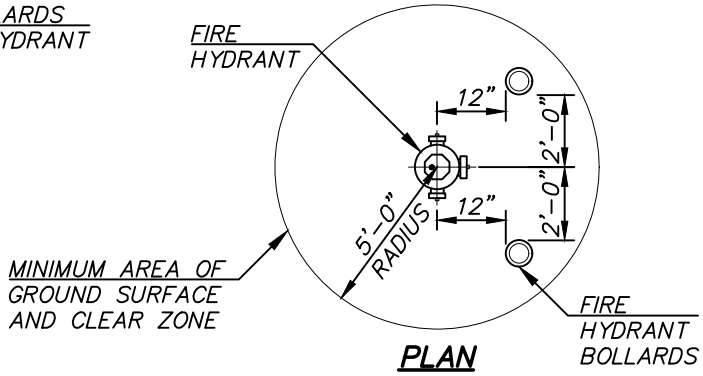

PLAN

FIRE HYDRANT BOLLARDS INSTALLATION

FIRE HYDRANT ASSEMBLY REV. 11/6/17

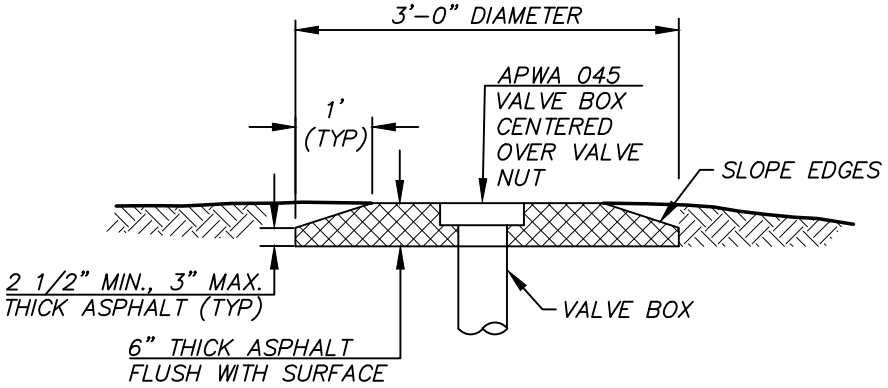

NOTES

1. THE COMPLETED PATCH SHALL BE FLUSH WITH THE SURROUNDING FINAL GRADE, SHALL NOT BE MORE THAN 1/8" FLUSH WITH THE SURROUND PAVEMENT, AND SHALL BE SMOOTH FOR TRAFFIC.
2. WHEN RAISING THE VALVE BOX TO FINISHED GRADE, EXCAVATE CASTING TO A DEPTH NECESSARY TO VERIFY CASTING OVERLAPS SOIL PIPE BY 3". ADD SOIL PIPE AS NEEDED. VALVE BOX SHALL BE CENTERED OVER THE VALVE NUT.
3. SLIP CANS ARE NOT ALLOWED WHEN RAISING VALVE BOXES TO GRADE.

REV. 10/20/17

VALVE BOX ASPHALT COLLAR DETAIL FOR NON-PAVED AREAS

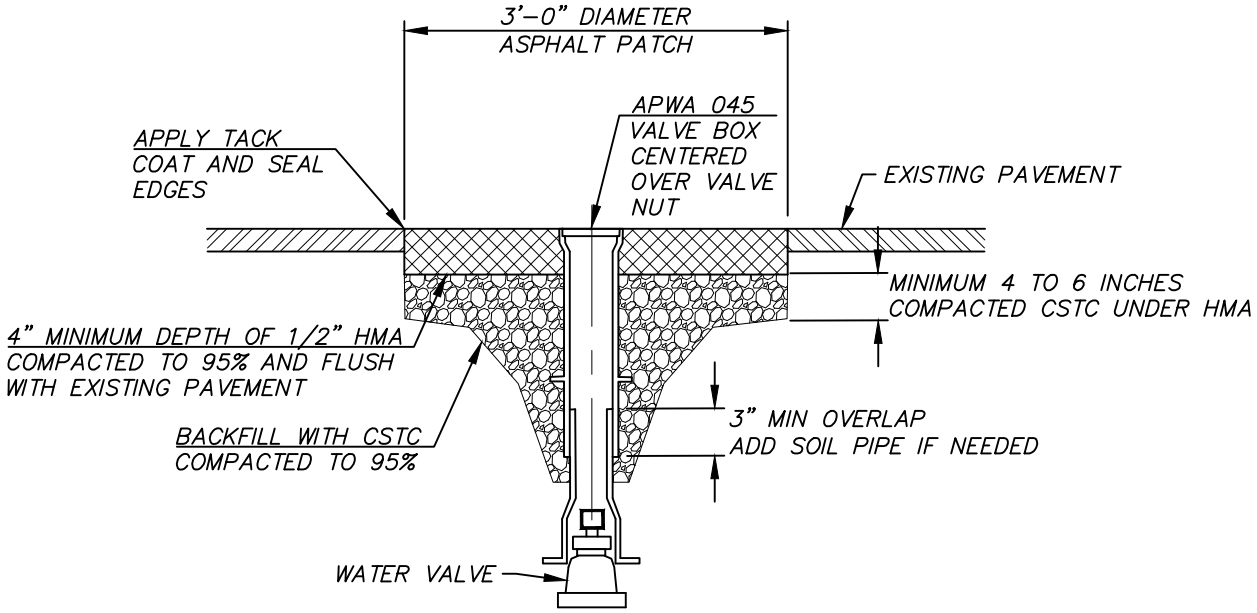

NOTES

1. VALVE CANS SHALL BE RAISED TO GRADE AFTER PLACEMENT OF THE ASPHALT'S FINAL LIFT AND WITHIN 48 HOURS UNLESS OTHERWISE APPROVED BY THE DISTRICT.
2. NEATLY REMOVE ASPHALT AROUND EXISTING VALVE CASTING.
3. EXCAVATE VALVE CASTING TO A DEPTH NECESSARY TO RAISE CASTING AND VERIFY CASTING OVERLAPS SOIL PIPE BY 3". ADD SOIL PIPE AS NEEDED. VALVE BOX SHALL BE CENTERED OVER THE VALVE NUT.
4. SLIP CANS ARE NOT ALLOWED.
5. BACKFILL WITH CSTC COMPACTED TO 95% (MODIFIED PROCTOR).
6. INSTALL 1/2" HMA IN 2–INCH LIFTS, TO A COMPACTED DEPTH EQUAL TO THE EXISTING PAVEMENT OR A MINIMUM OF 4", WHICHEVER IS GREATER. TACK ALL EDGES AND SEAL FINISH JOINTS WITH TAR AND SAND.
7. THE COMPLETED PATCH SHALL BE FLUSH WITH THE SURROUNDING PAVEMENT, SHALL NOT VARY FROM BEING FLUSH BY MORE THAN 1/8", AND SHALL BE SMOOTH FOR TRAFFIC.

REV. 10/20/17

VALVE BOX PAVEMENT PATCH DETAIL AND PAVED AREAS

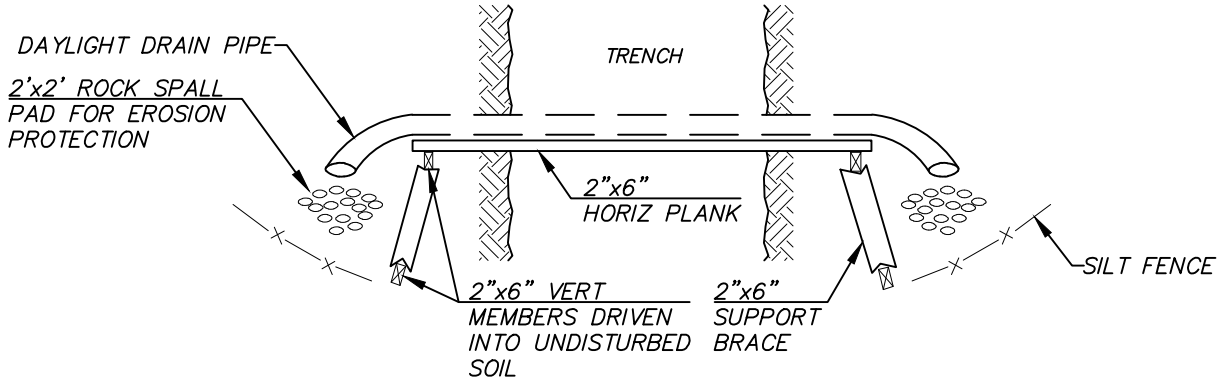

PLAN

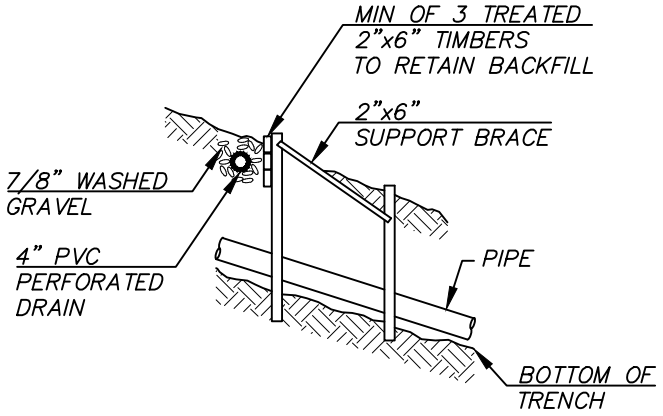

PROFILE

REV. 10/20/17

HILL HOLDER

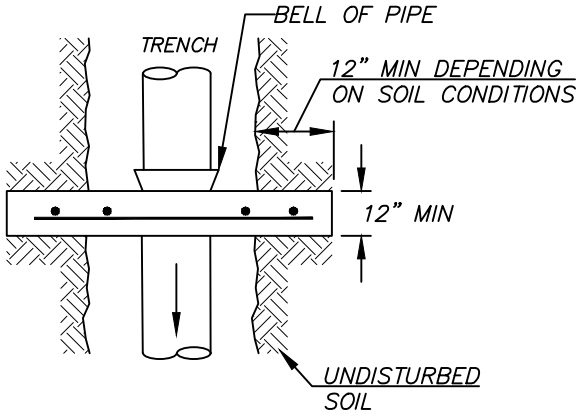

PLAN

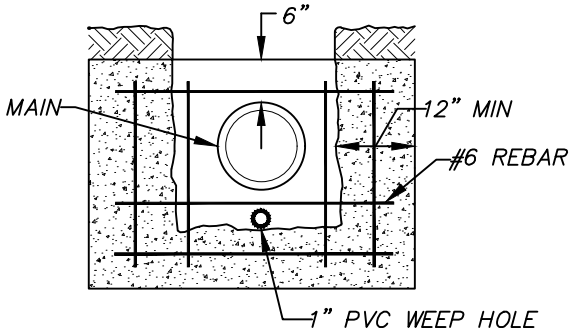

ELEVATION

PIPE ANCHOR

REV. 10/20/17

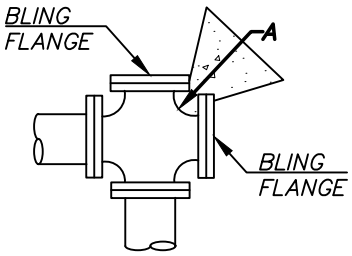

CAPPED CROSS

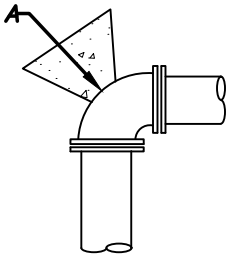

90° BEND

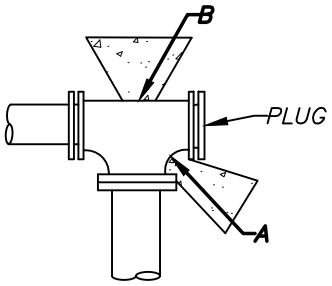

TEE

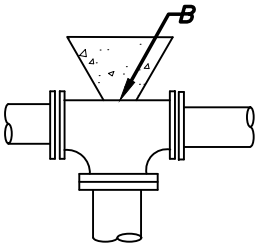

TEE

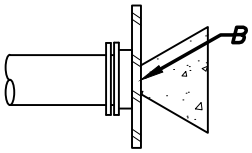

CAP

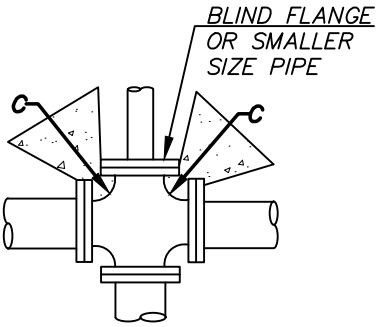

CROSS

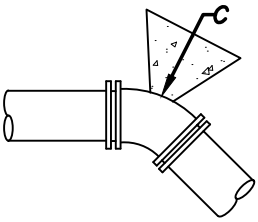

45° BEND

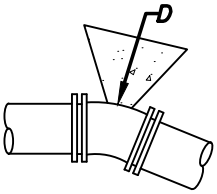

22 1/2° BEND

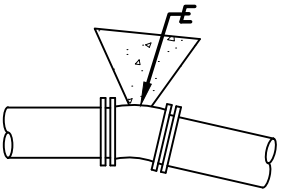

11 1/4° BEND

THRUST BLOCK TABLE
MIN BEARING AREA AGAINST UNDISTURBED SOIL (SF)

PIPE SIZE	A(FT^2)	B(FT^2)	C(FT^2)	D(FT^2)	E(FT^2)	X
4"	3	1	1	1	1	NONE
6"	4	4	2	1	1	NONE
8"	7	6	4	2	1	4
10"	11	10	6	3	2	6
12"	16	14	9	5	3	9
14"	22	19	12	6	3	12
16"	29	25	16	8	4	16
18"	36	31	20	10	5	20
20"	45	39	24	13	6	24
22"	54	47	29	15	8	29
24"	64	56	35	18	9	35
28"	87	76	48	24	12	48
30"	101	87	55	28	14	55
36"	145	125	78	40	20	78
42"	197	171	107	55	27	107
48"	257	223	140	71	36	140

NOTES

1. BEARING AREA OF CONCRETE THRUST-BLOCK BASED ON 200 PSI PRESSURE AND SAFE SOIL BEARING LOAD OF 2,000 POUNDS PER SQUARE FOOT.
2. AREAS MUST BE ADJUSTED FOR OTHER PIPE SIZES, PRESSURES AND SOIL CONDITIONS.
3. CONCRETE BLOCKING SHALL BE CAST-IN-PLACE AND HAVE A MINIMUM OF 1/4 SQUARE FOOT BEARING AGAINST THE FITTING.
4. BLOCK SHALL BEAR AGAINST FITTINGS ONLY AND SHALL BE CLEAR OF JOINTS TO PERMIT TAKING UP OR DISMANTLING OF JOINT.
5. CONTRACTOR SHALL INSTALL BLOCKING ADEQUATE TO WITHSTAND FULL TEST PRESSURE AS WELL AS TO CONTINUOUSLY WITHSTAND OPERATION PRESSURE UNDER ALL CONDITIONS OF SERVICE.

CONCRETE BLOCKING REV. 10/20/17

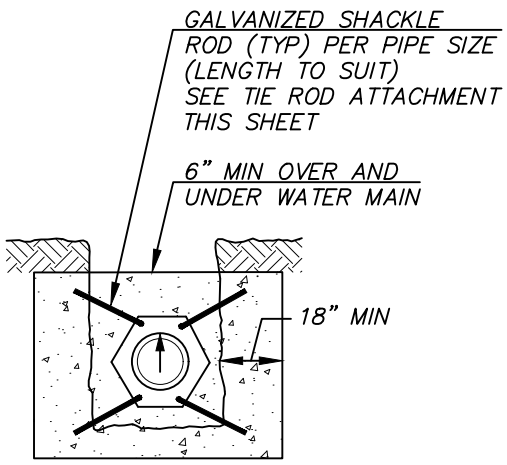

ELEVATION

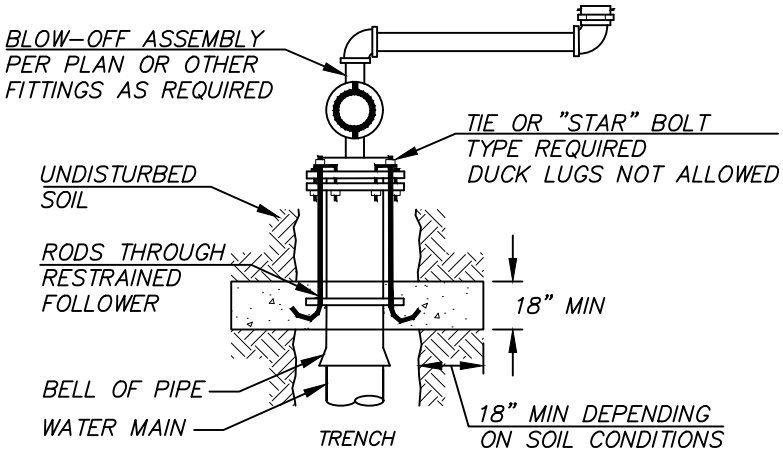

PLAN

DEADMAN REV. 10/18/17

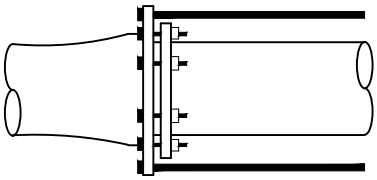

CAST OF LUGS

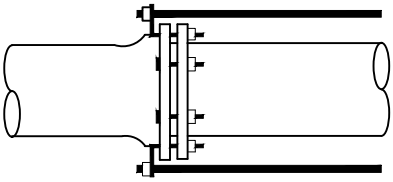

TIE BOLT

SIZE	PRESSURE PSI	FORCE IN POUNDS	NUMBER OF TIE RODS									
			2	3	4	6	8	10	12	14	16	24
3"	300	2,120	3/8"									
4"	300	3,780	3/8"									
6"	300	8,500	5/8"	1/2"		3/8"						
8"	300	15,100		3/4"	5/8"	1/2"						
10"	275	21,620			3/4"	5/8"	1/2"					
12"	250	33,930				3/4"	5/8"					
14"	250	46,200					3/4"					
16"	225	45,250					3/4"		5/8"			
18"	200	50,900					3/4"		5/8"			
20"	200	62,840						3/4"		5/8"		
24"	200	90,480								3/4"		
30"	200	141,370								1"	7/8"	
36"	200	203,580									1"	7/8"

TIE ROD ATTACHMENTS REV. 10/18/17

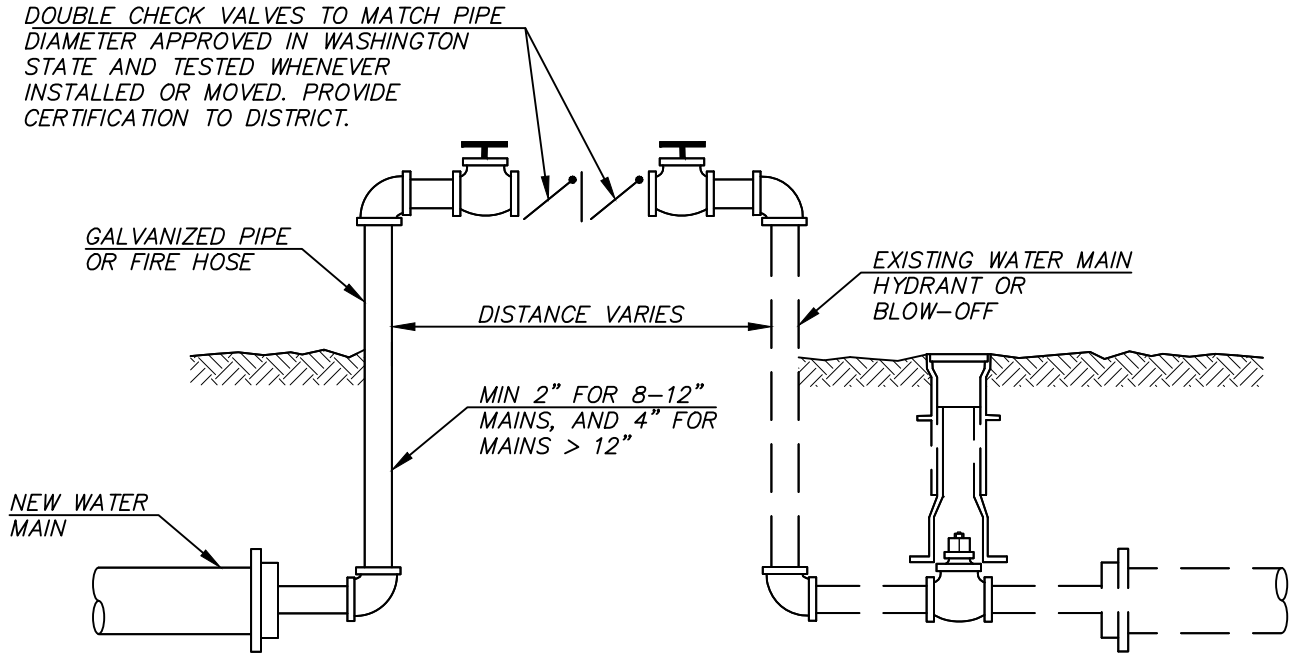

NOTES

1. FOR BELOW GROUND INSTALLATION, USE TYPE II BLOW-OFF ASSEMBLY, MODIFIED AS REQUIRED BY DISTRICT. INSTALL IN AREA NOT SUBJECT TO FLOODING.
2. ALL FILLING AND FLUSHING SHALL BE METERED BY DISTRICT. PROVIDE SPACE FOR INSTALLATION OF METER.
3. ALL NEW MAINS SHALL BE KEPT SEPARATE FROM THE DISTRICT'S EXISTING SYSTEM UNTIL THE NEW MAINS ARE TESTED AND ACCEPTED. FINAL CONNECTION REQUIRES 100% INSPECTION BY DISTRICT.
4. PROTECT ABOVE GROUND INSTALLATION FROM DAMAGE AND FREEZING.

TESTING CONNECTION REV. 10/18/17

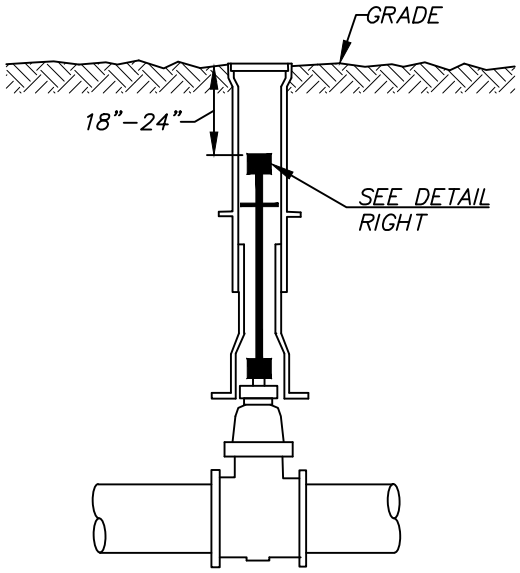

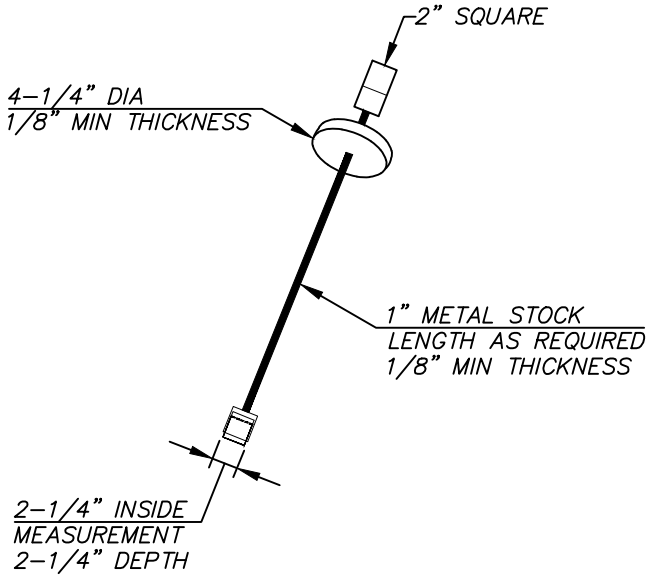

NOTE

EXTENSIONS ARE REQUIRED WHEN THE VALVE NUT IS MORE THAN 36" BELOW FINISHED GRADE. EXTENSIONS ARE TO BE A MINIMUM OF ONE (1) FOOT LONG. ONLY ONE EXTENSION TO BE USED PER VALVE. VALVE EXTENSION TO BE WITHIN 18" TO 24" OF FINISHED GRADE.

NOTE

ALL EXTENSIONS ARE TO BE MADE OF STEEL SIZED AS NOTED, AND PAINTED WITH TWO COATS OF CARBON ELASTIC (ATCO #222) AS SPECIFIED BY PRESERVATIVE PAINT CO. OR AN APPROVED EQUAL

VALVE OPERATING NUT EXTENSION

REV. 10/24/17

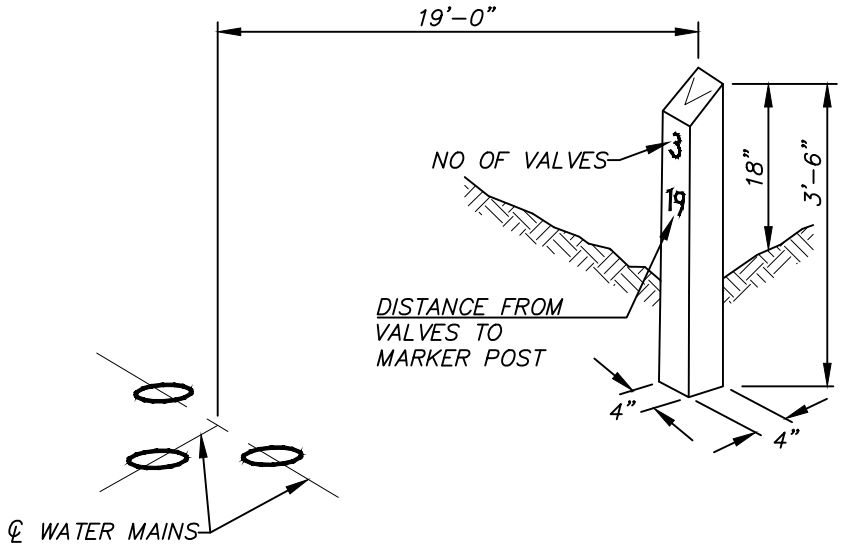

NOTES

1. VALVE MARKER POST SHALL BE A FOGTITE VALVE MARKER OR APPROVED EQUAL.
2. THE POST SHALL BE SET AT RIGHT ANGLES TO THE ROADWAY FROM THE VALVE AND SHALL BE SITUATED IN A SAFE AND REASONABLY CONSPICUOUS LOCATION.
3. FOR MORE THAN ONE VALVE, THE NUMBER OF VALVES SHALL BE NOTED NEAR THE TOP OF THE POST WITH THE DISTANCE TO THE CENTER OF THE VALVE (OR CLUSTER) MARKED BELOW.
4. PAINT VALVE MARKER WITH (2) COATS ALKYD INDUSTRIAL ENAMEL SAFETY YELLOW AND APPLY NUMBER OF VALVES AND DISTANCE (TO THE CLOSEST FOOT) TO THE LINE VALVE CAPS IN COLE NUMBERS APPLIED WITH WATERPROOF LIQUID NAILS.

VALVE MARKER POST

REV. 10/24/17

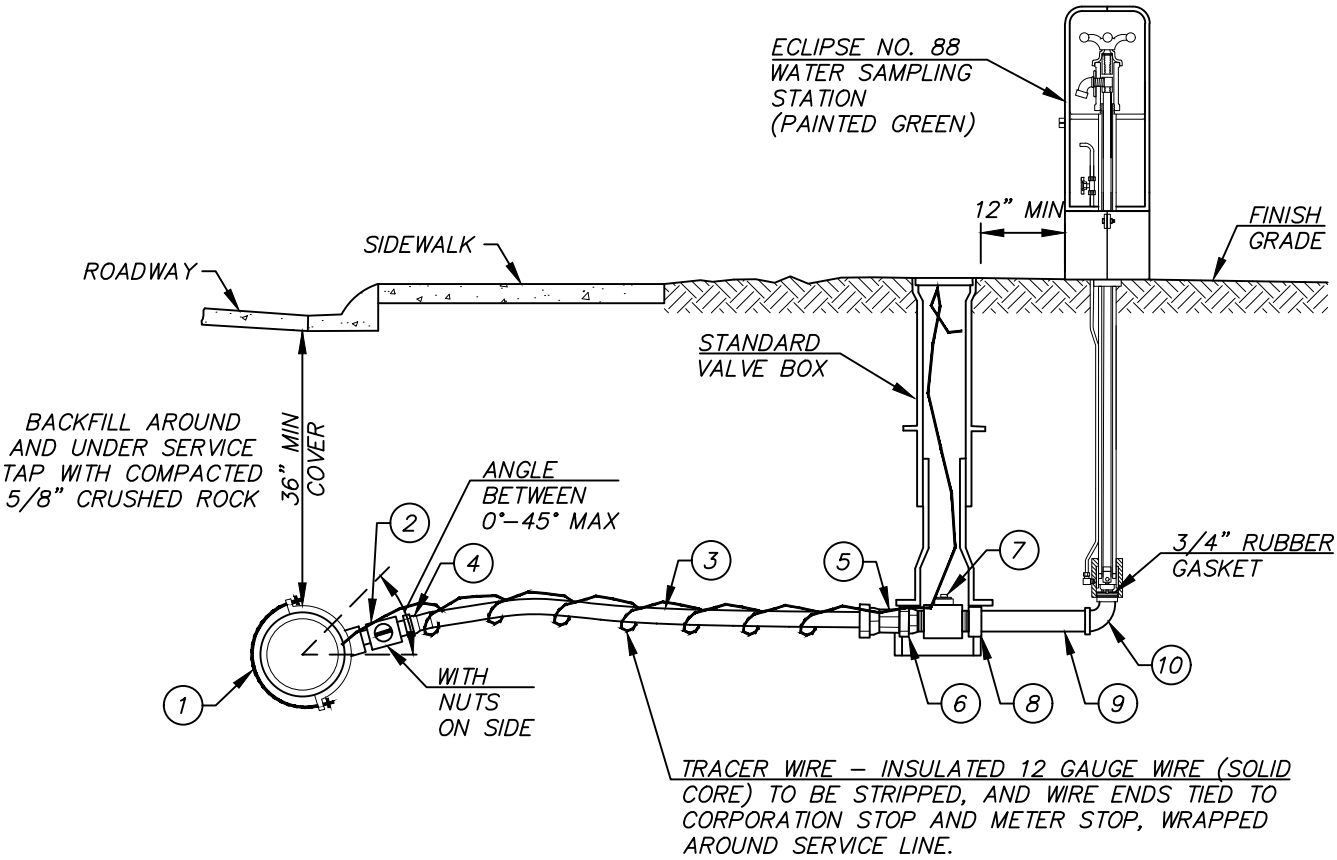

ITEM	DESCRIPTION	FORD PART NO	MUELLER PART NO	A.Y. MCDONALD	OTHER PART NO.	QTY
1	1" SADDLE I.P.T.	N/A	N/A	N/A	ROMAC 202S	1
2	1" CORPSTOP (MIPxMIP)	FB500–4	B2996	3131B1	N/A	1
3	1" HDPE PIPE	— DRISCOPLEX 5100 ULTRA LINE SDR7 200 PSI IPS OR PW EAGLE—				1
4	1" FIPxCOMPRESSION ADAPTOR	C16–44P *	H15454.10	4754–33	N/A	2
	W/ STAINLESS STEEL STIFFENER	INSERT–72	505142	6136	N/A	2
5	1" PAC JOINT x 1" MIP	C86–44	H15429	475–CP	N/A	1
6	1" FIP x 3/4 FIP REDUCER	C11–43	N/A	N/A	N/A	1
7	3/4" BALL CORP MIP x MIP	FB500–3	N/A	N/A	N/A	1
8	3/4" COUPLING	N/A	N/A	N/A	N/A	1
9	3/4" BRASS NIPPLE	N/A	N/A	N/A	N/A	1
10	3/4" 90° BRASS STREET ELL	N/A	N/A	N/A	N/A	1

* QUICK JOINT ACCEPTABLE, GRIP JOINT NOT ACCEPTABLE

NOTES

1. ALL PIPE AND FITTINGS TO BE ASSEMBLED WITH TEFLON TAPE AND PIPE DOPE UNLESS OTHERWISE NOTED.
2. SERVICE LINES SHALL BE INSTALLED PERPENDICULAR TO THE WATER MAIN.
3. THE SERVICE LINE SHALL BE INSTALLED TO ALLOW FOR THE FAR SIDE OF THE SAMPLE STATION TO BE INSTALLED IN THE R/O/W OR EASEMENT LINE, UNLESS OTHERWISE DIRECTED BY THE DISTRICT.

WATER SAMPLING STATION REV. 10/30/17

SEWER DETAILS

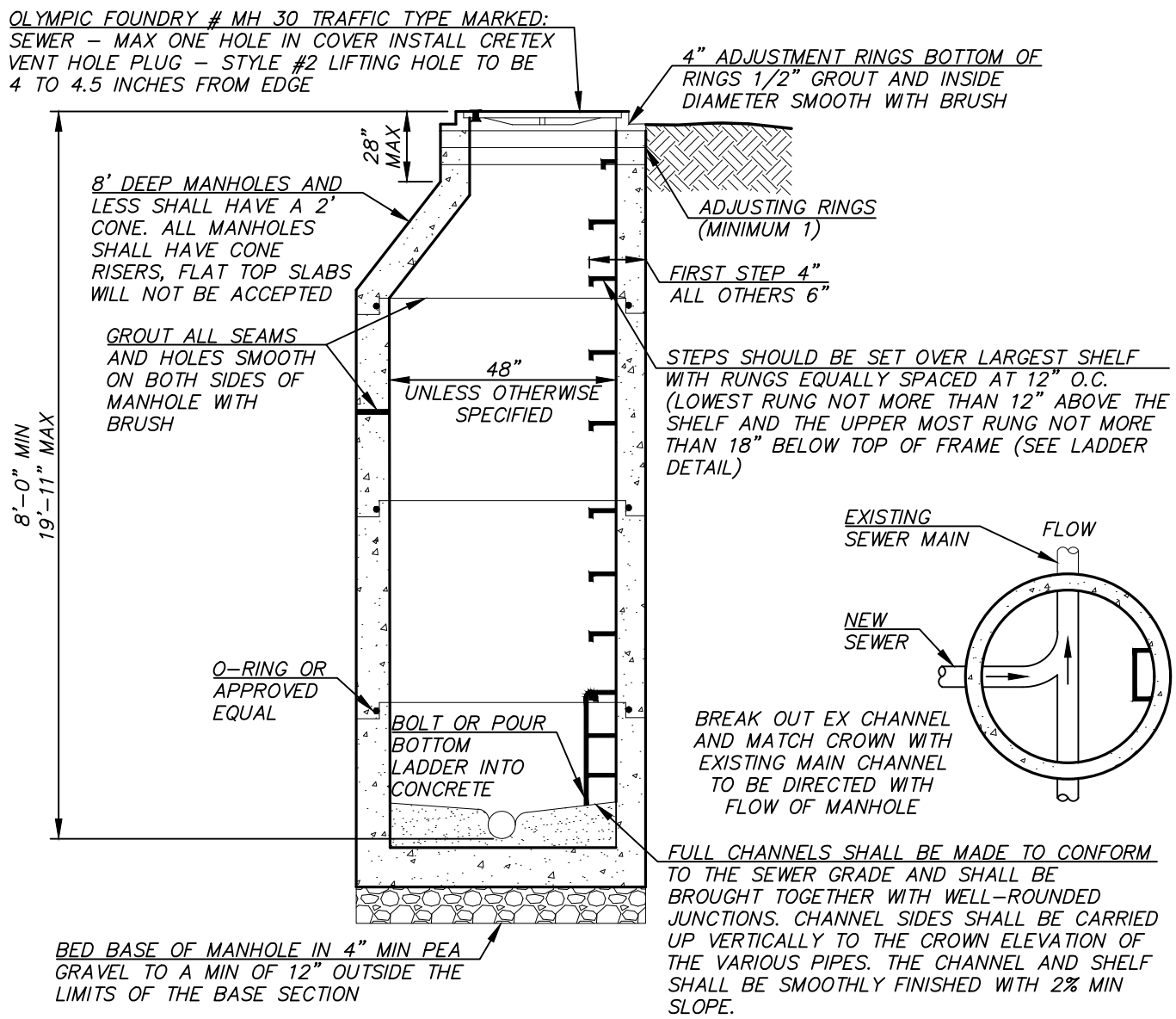

NOTES

1. BACKFILLING AND MECHANICAL COMPACTION SHALL BE PERFORMED CAREFULLY SO THAT NO DAMAGE IS IS DONE TO THE PIPE OR TO ITS ALIGNMENT. THE DISTRICT MAY DIRECT THE CONTRACTOR TO USE SPECIAL BACKFILL TECHNIQUES WHEN THE DISTRICT DEEMS IT NECESSARY. COMPACTION IS TO MEET KING COUNTY REQUIREMENTS.

2. MANHOLES SET IN PAVED STREETS OR OTHER PAVED AREAS SHALL BE SET TO FINISHED GRADE OF THE PAVING, AND WHEN REQUIRED THE MANHOLE FRAME SHALL BE TILTED TO CONFORM TO THE GRADE OF THE PAVED SURFACE. REMOVE ASPHALT FROM COVER AFTER PAVING.

3. ASPHALT PATCH WILL BE REQUIRED ON ALL MANHOLES INSTALLED ON THE SHOULDER OF THE ROADWAY. (SEE SANITARY MANHOLE ASPHALT PATCH DETAIL).

4. IF MANHOLE IS INSTALLED ON UNIMPROVED GROUND SET MANHOLE TOP 6" ABOVE GRADE WITH LOCKING COVER AND FRAME (OLYMPIC FOUNDRY #MH 30 D/T) AND ASPHALT PATCH (SEE MANHOLE ASPHALT ASPHALT COLLAR DETAIL).

5. BASE SECTION OPENINGS TO RECEIVE PIPE SHALL BE CIRCULAR CORE-DRILLED OR KNOCK-OUTS. KOR-N-SEAL CONNECTOR REQUIRED.

6. HORIZONTAL DISTANCE BETWEEN MANHOLES SCALED FROM WORKSHEETS AND ROADWAY PLAN AND PROFILES. ACTUAL DISTANCES TO THE COMPUTED AT TIME OF STAKING.

7. MANHOLES BETWEEN 6-FEET AND 8-FEET DEEP REQUIRE WRITTEN DISTRICT APPROVAL. MANHOLES LESS THAN 6 FEET DEEP ARE NOT ALLOWED.

8. MANHOLES 20' AND GREATER IN DEPTH SHALL BE 60" DIAMETER. FOR PIPE 15" OR GREATER DIAMETER, MANHOLES SHALL BE 72" DIAMETER.

STANDARD SANITARY MANHOLE REV. 10/19/17

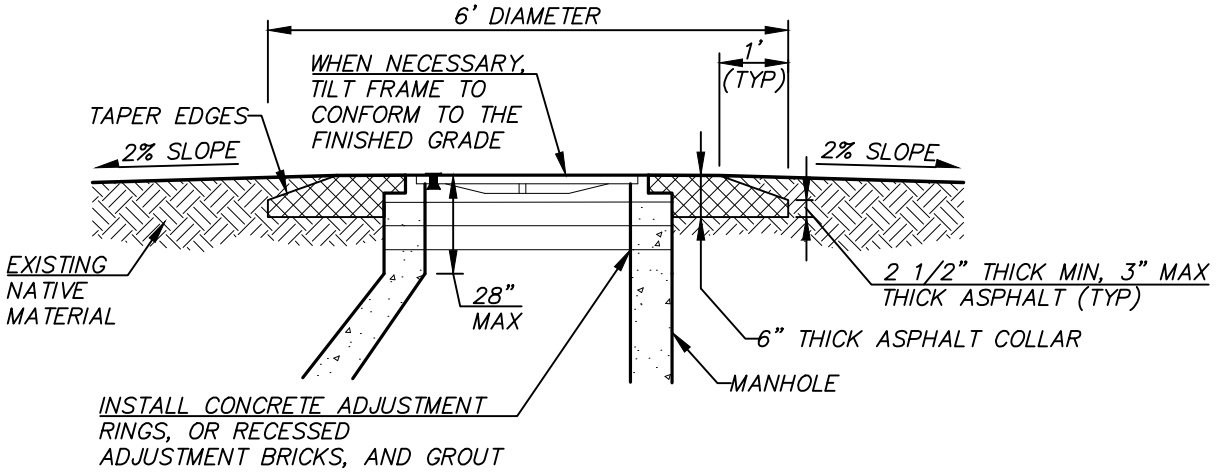

MANHOLE ASPHALT COLLAR FOR NON-PAVED AREAS REV. 10/19/17

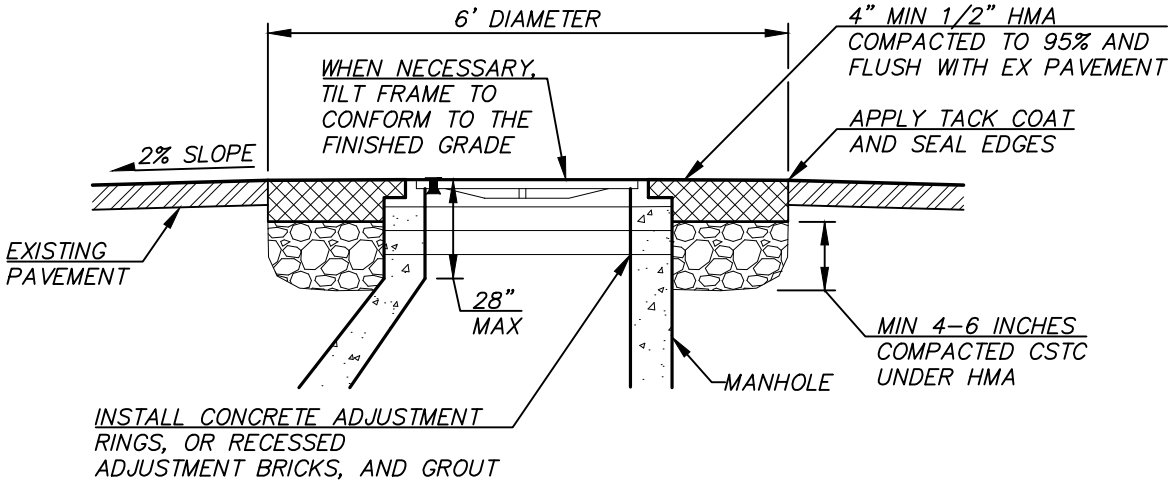

MANHOLE PAVEMENT PATCH FOR PAVED AREAS REV. 10/19/17

NOTES

1. CONTRACTOR SHALL WARRANTY MANHOLE ADJUSTMENT AREA FREE FROM LEAKS FOR ONE YEAR.
2. IN PAVED AREAS, MANHOLE FRAMES SHALL BE RAISED TO GRADE AFTER PLACEMENT OF THE ASPHALT'S FINAL LIFT AND WITHIN 48 HOURS UNLESS OTHERWISE APPROVED BY THE DISTRICT.
3. IN PAVED AREAS, NEATLY REMOVE ASPHALT AROUND EXISTING MANHOLE FRAME.
4. INSTALL CHANNEL BOARD IN MANHOLE PRIOR TO ANY WORK, AND REMOVE AFTER FINAL ADJUSTMENT.
5. PRIOR TO ADJUSTMENT, NOTIFY DISTRICT IF THE FINAL MANHOLE NECK WILL EXCEED 28".
6. IN PAVED AREAS, EXCAVATE AROUND EXISTING MANHOLE FRAME TO A MIN. DEPTH OF 12".
7. REMOVE FRAME AND COVER, AND INSTALL ADJUSTMENT RINGS, TILTING FRAME AS NECESSARY TO MATCH EXISTING GRADE. ADJUSTMENT BRICKS RECESSED FOR GROUTING, CAN BE UTILIZED. REINSTALL FRAME AND COVER.
8. IN PAVED AREAS BACKFILL WITH CRUSHED SURFACING TOP COURSE (CSTC) COMPACTED TO 95% (MODIFIED PROCTOR).
9. IN NON-PAVED AREAS, BACKFILL WITH APPROVED BACKFILL MATERIAL COMPACTED TO 95%.
10. IN PAVED AREAS, INSTALL 1/2" HMA IN 2-INCH LIFTS, TO A COMPACTED DEPTH EQUAL TO THE EXISTING PAVEMENT OR A MINIMUM OF 4", WHICHEVER IS GREATER. TACK ALL EDGES AND SEAL FINISH JOINTS WITH TAR AND SAND.
11. IN UN-PAVED AREAS, INSTALL ASPHALT PATCH TO A MINIMUM COMPACTED DEPTH OF 6" AS SHOWN ABOVE.
12. GROUT MANHOLE NECK. "JETSET" NOT ALLOWED. DO NOT RUN GROUT ONTO MANHOLE FRAME.

REV. 10/19/17

GENERAL NOTES FOR ASPHALT COLLAR/PATCHES AROUND MANHOLES

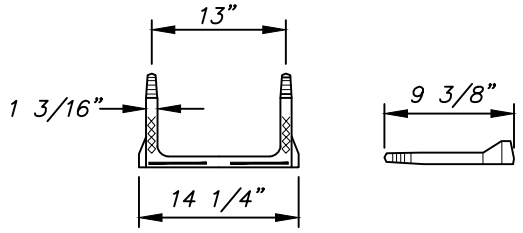

SAFETY STEP
(LANE INTERNATIONAL OR APPROVED EQUAL)

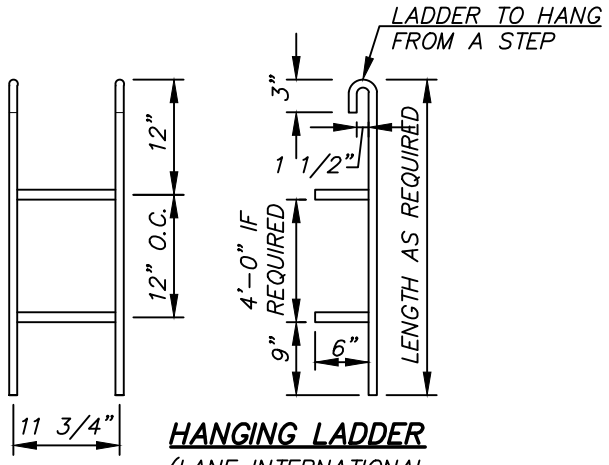

HANGING LADDER
(LANE INTERNATIONAL OR APPROVED EQUAL)

NOTES

1. POLYPROPYLENE PLASTIC STEPS SHALL BE A POLYPROPYLENE PLASTIC STEP INJECTION MOLDED AROUND A 1/2 INCH DIAMETER ASTM A-615, GRADE 60, STEEL REINFORCING BAR. INSTALLATION AS PER THE MANUFACTURER'S SPECIFICATIONS.
2. POLYPROPYLENE PLASTIC LADDER SHALL HAVE A POLYPROPYLENE PLASTIC STEP INJECTION MOLDED AROUND A 1/2 INCH DIAMETER ASTM A-615, GRADE 60, STEEL REINFORCING BAR, AND A POLYPROPYLENE PLASTIC RAIL INJECTION MOLDED AROUND A 9/16 INCH DIAMETER ASTM C-1018, COLD DRAWN BAR. INSTALLATION AS PER THE MANUFACTURER'S SPECIFICATION.

MANHOLE STEP AND LADDER

REV. 10/19/17

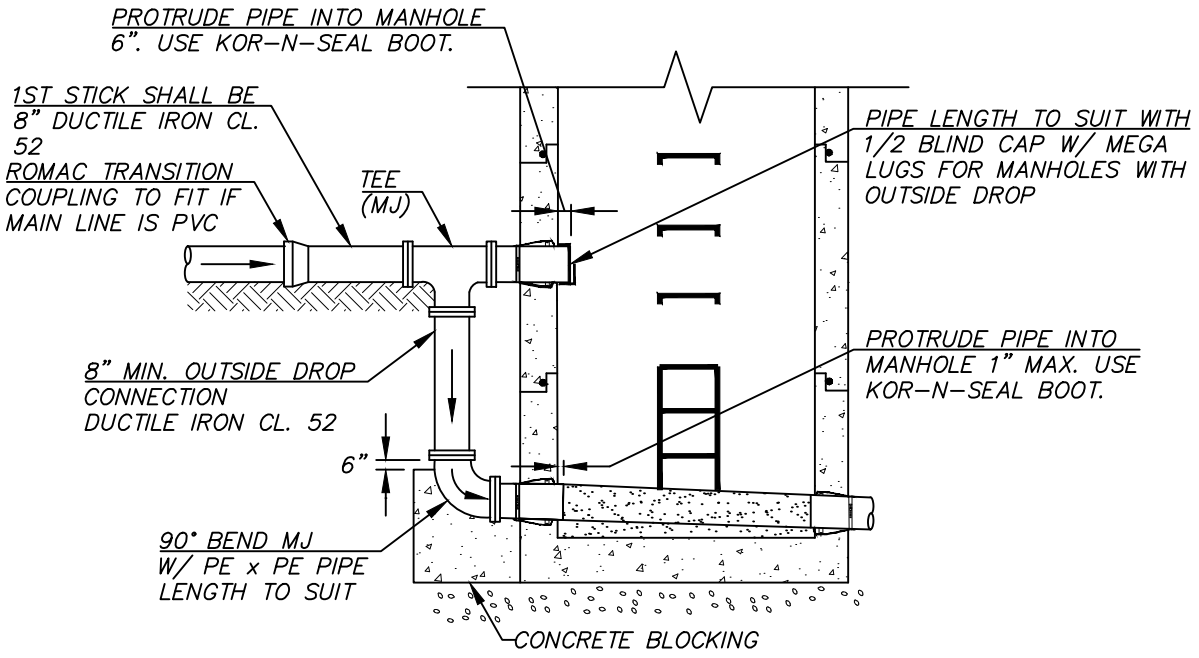

NOTES

1. ALL DUCTILE IRON PIPE AND FITTINGS SHALL BE PROTECTO 401 LINED.
2. DROP MANHOLE SHALL MEET ALL REQUIREMENTS AS STATED IN THE STANDARD MANHOLE DETAIL, MATERIALS AND CONSTRUCTION NOTES.
3. DROP MANHOLES SHALL ONLY BE USED IN STRAIGHT FLOW-THROUGH LOCATIONS (NO 90° TURNS).
4. ALL DUCTILE IRON FITTINGS WITH MEGA-LUGS.
5. VERTICAL BEND MAY BE REQUIRED DUE TO PIPE SLOPE CONDITIONS AT DUCTILE IRON TEE.

DROP MANHOLE

REV. 10/19/17

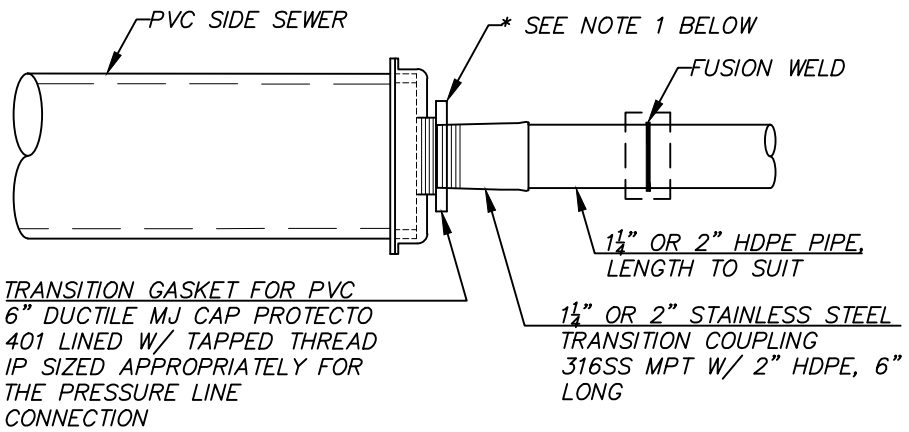

NOTES

1. FOR 1–1/4" SERVICE USE 2"x1–1/4" BRASS BUSHING.
2. FOR 2" SERVICE, OMIT BUSHING.

PRESSURE LINE CONNECTION

REV. 10/19/17

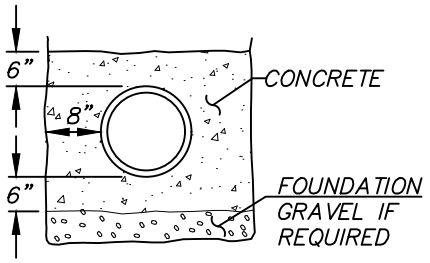

CONCRETE ENCASEMENT FOR SANITARY SEWERS

REV. 10/19/17

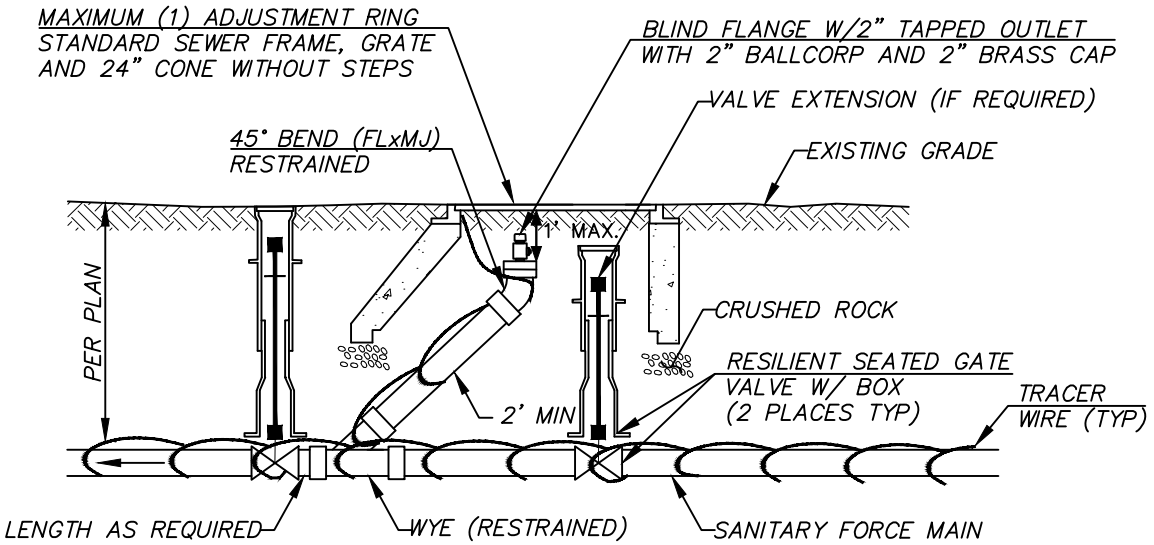

NOTES

1. VALVES, VALVE BOXES AND VALVE EXTENSIONS SHALL MEET THE SAME REQUIREMENTS AS SHOWN IN THE STANDARD WATER DETAILS. VALVE BOX COVERS SHALL OLYMPIC FOUNDRY 940 OR EQUAL MARKED "SEWER".
2. VALVE MARKER POSTS SHALL MEET THE SAME REQUIREMENTS AS SHOWN IN THE WATER DETAILS AND BE PAINTED AS SPECIFIED IN THE STANDARD CONSTRUCTION NOTES.
3. ALL D.I. PIPE AND FITTINGS SHALL BE PROTECTOR 401 EPOXY COATED. ALL PIPE AND FITTINGS SHALL BE RESTRAINED JOINT.

SANITARY FORCE MAIN CLEANOUT TYPE II

REV. 10/19/17

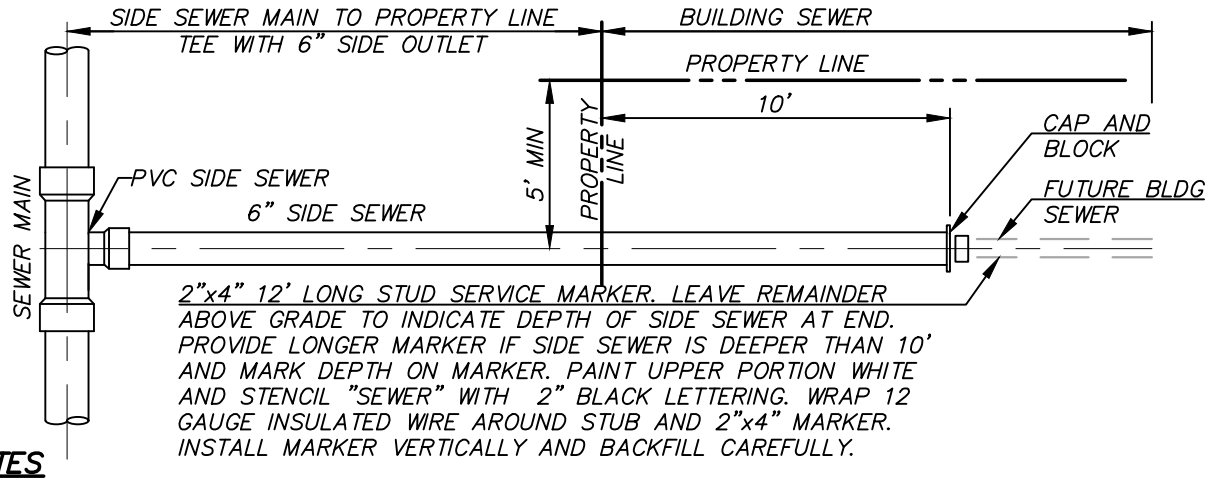

NOTES

1. MAXIMUM DEPTH OF SIDE SEWER AT END IS 10' UNLESS ADDITIONAL DEPTH IS NEEDED TO PROVIDE GRAVITY SEWER SERVICE.
2. FOR MULTI-FAMILY AND/OR COMMERCIAL PROJECTS, SIDE SEWERS MAY BE EXTENDED, AT THE DISTRICT'S DISCRETION, FROM THE EDGE OF THE ROAD OR PROPERTY LINE TO WITHIN 3 FEET OF THE BUILDING FOUNDATION.

SINGLE SIDE SEWER

REV. 10/19/17

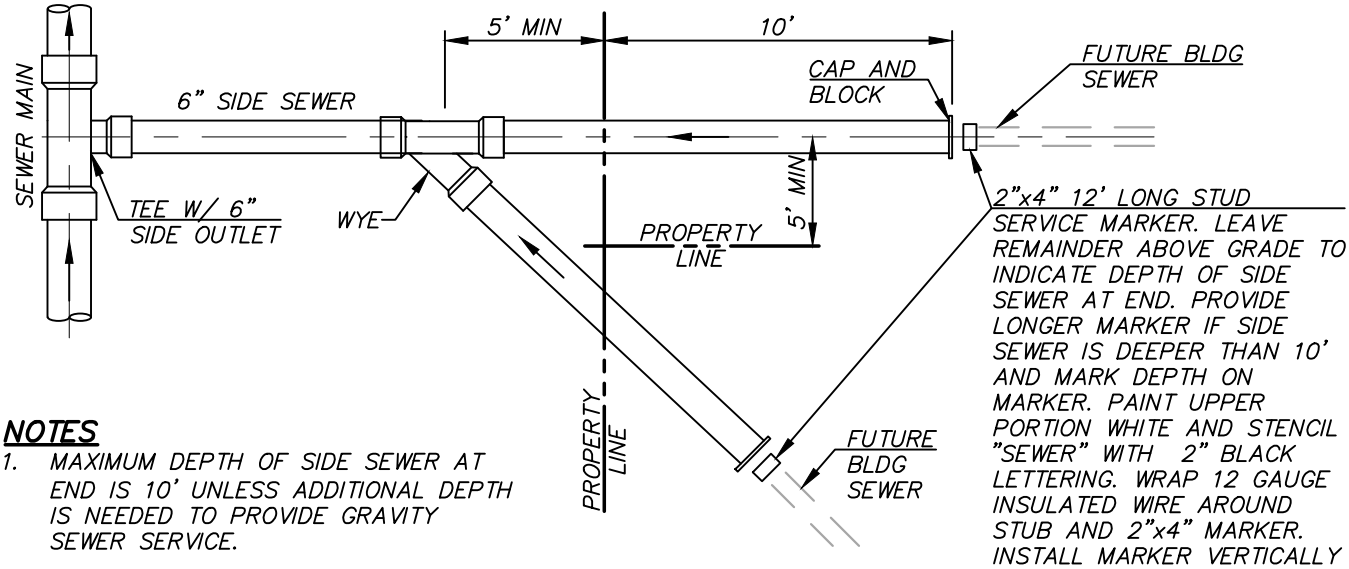

NOTES

1. MAXIMUM DEPTH OF SIDE SEWER AT END IS 10' UNLESS ADDITIONAL DEPTH IS NEEDED TO PROVIDE GRAVITY SEWER SERVICE.
2. POSITION WYE IN DIRECTION OF FLOW.

DOUBLE SIDE SEWER

REV. 10/19/17

NOTES

1. CONNECTION OF NEW SIDE SEWER TO EXISTING MAIN MAY USE EITHER:

   - CUT IN TEE W/ PVC SLIP COUPLINGS.
   - ROMAC SST STAINLESS STEEL TAPPING SLEEVE W/ FL X MJ ADAPTER AND GASKET SIZED FOR D3034 PVC SIDE SEWER. ROMAC SIDE SEWER SADDLE, MODEL CB, IS NOT ALLOWED.

2. UNLESS OTHERWISE SHOWN ON PLAN, MINIMUM COVER FOR SIDE SEWERS (WHICHEVER IS LOWER):
   - 18" - PRIVATE PROPERTY
   - 3' - AT PROPERTY LINE
   - 2'-6" IF CROSSING A DITCH IN PUBLIC RIGHT OF WAY LOWER THAN THE LOWEST HOUSE ELEVATION

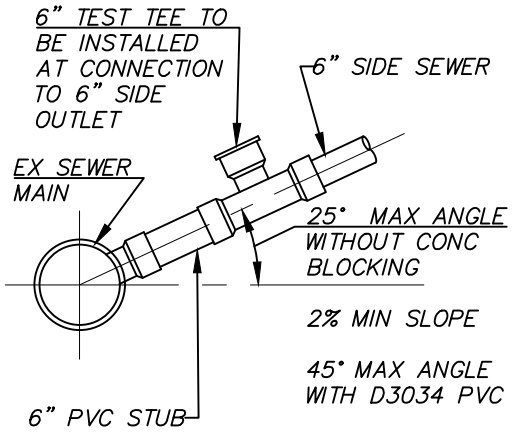

SIDE SEWER DETAILS

REV. 10/19/17

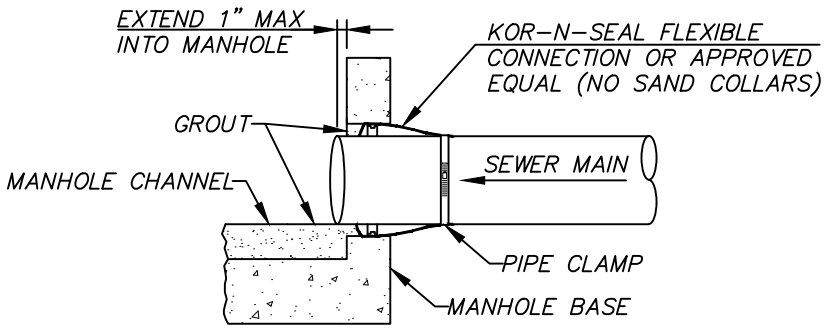

SANITARY MANHOLE INLET CONNECTION

REV. 10/19/17

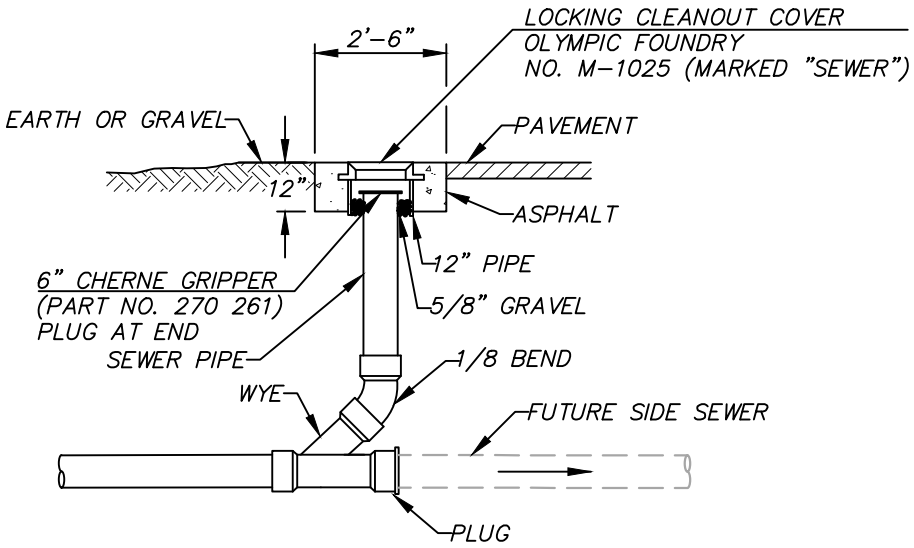

SIDE SEWER CLEANOUT

REV. 10/19/17

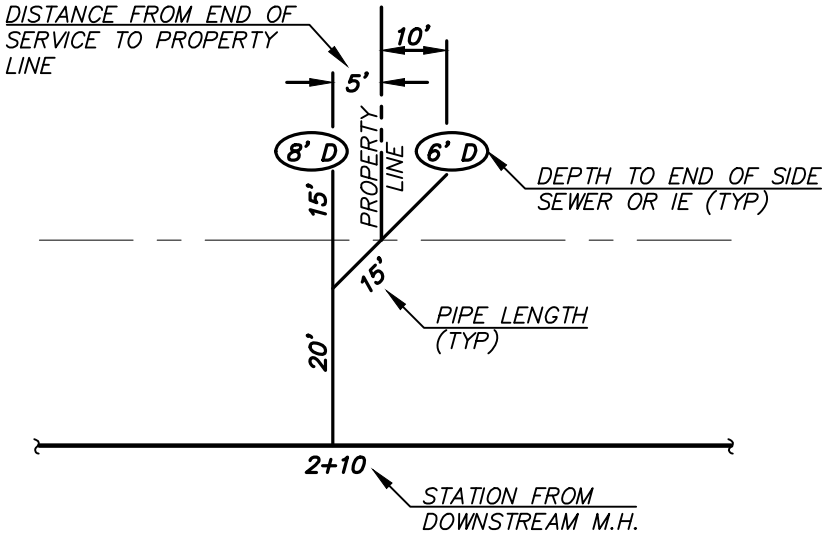

SIDE SEWER AS-BUILT

REV. 10/19/17

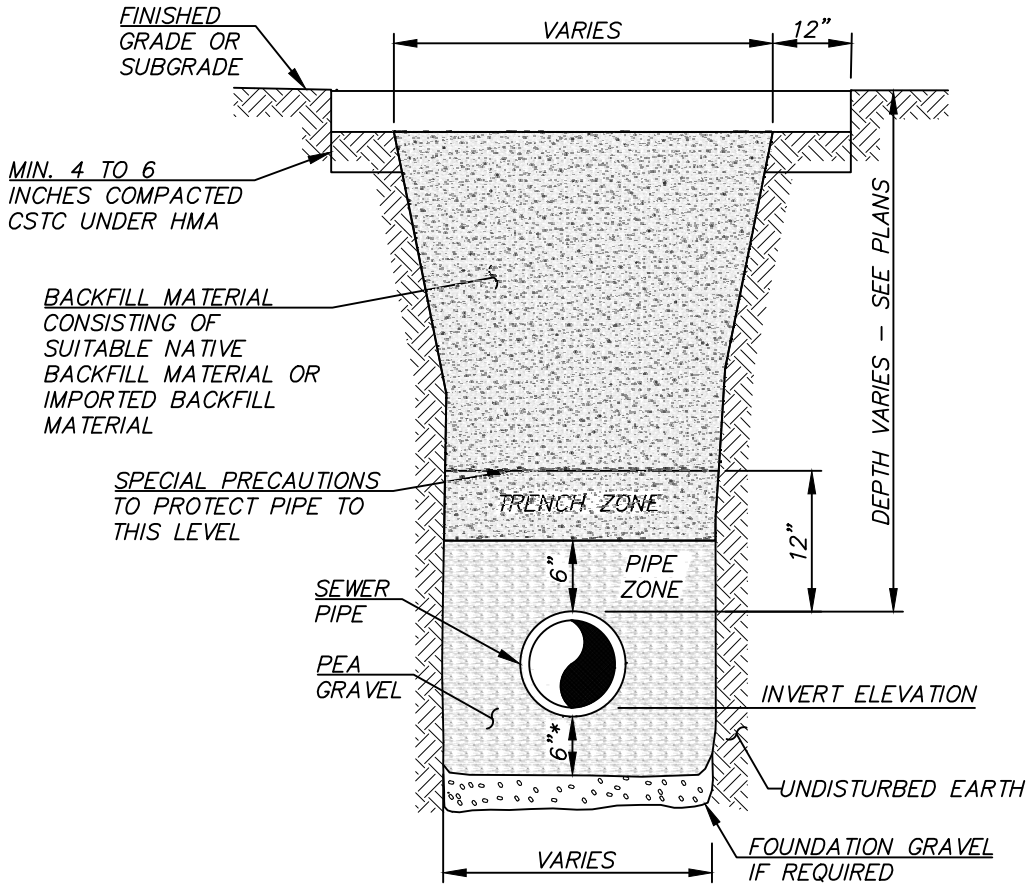

NOTES

1. * FOR PIPE DEEPER THAN 18', PIPE BEDDING SHALL EXTEND 18" ABOVE CROWN OF PIPE
2. NOT TO SCALE

SANITARY SEWER TRENCH SECTION

REV. 10/30/17

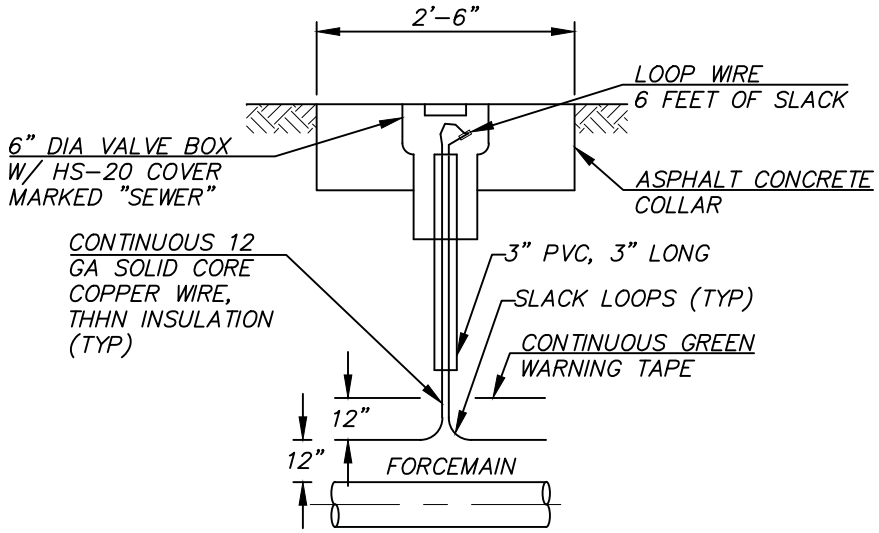

NOTES

1. LOCATE TEST BOX OVER CENTERLINE OF FORCEMAIN.
2. PROVIDE TEST BOX AT 500' INTERVALS AND AT BENDS.
3. PROVIDE 12" WIRE LOOP INSIDE VALVE BOX (TYP).
4. INLINE CONNECTORS ON WIRE ARE NOT ALLOWED.

FORCEMAIN TRACER WIRE LOCATE STATION

REV. 10/19/17

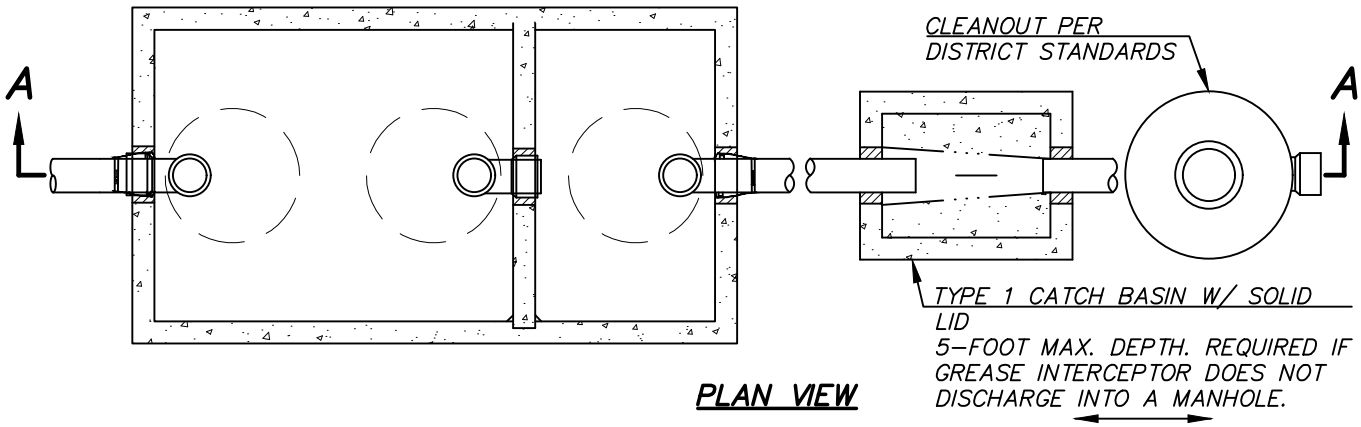

PLAN VIEW

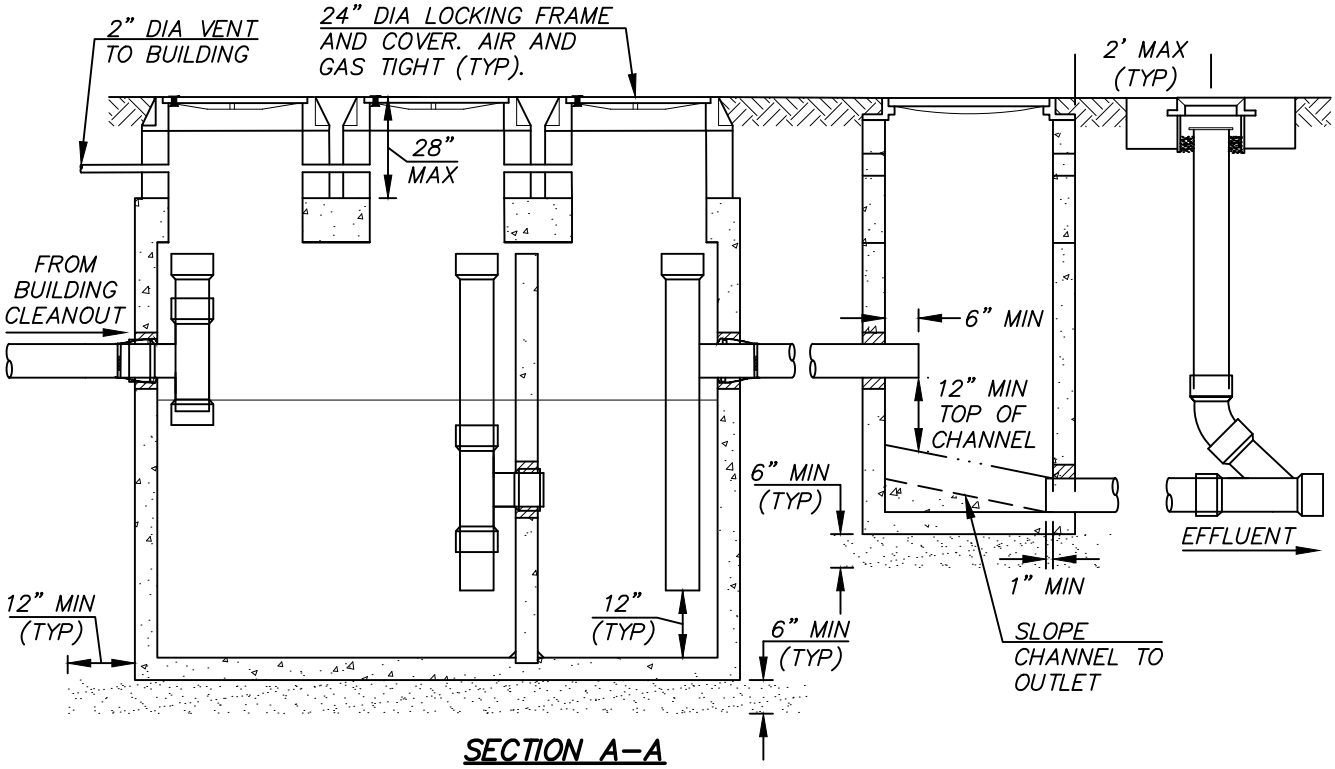

SECTION A–A

NOT TO SCALE

CONSTRUCTION NOTES

1. VAULT SHALL BE UTILITY VAULT GREASE INTERCEPTOR (1000 GALLON MINIMUM). VAULT SIZING CALCULATIONS SHALL BE SUBMITTED FOR REVIEW AND APPROVAL TO THE DISTRICT PRIOR TO APPROVAL OF CONSTRUCTION. LOCATED 50–FT MAX. FROM POINT OF ENTRY.
2. THE EXTERIOR OF VAULTS BELOW GRADE SHALL BE PAINTED WITH TWO (2) COATS OF BLACK BITUMASTIC SOLUTION. NO MOISTURE SHALL BE PRESENT DURING APPLICATION OF COATINGS.
3. NO MORE THAN 1–FOOT OF RISER RINGS FROM FINISHED GRADE. ADDITIONAL SECTIONS SHALL BE PROVIDED AS NECESSARY.
4. CLEAN OUTS PROVIDED 2–FOOT MAXIMUM AWAY FROM TYPE 1 CATCH BASIN.
5. MINIMUM OF 6–INCHES OF PEA GRAVEL BELOW STRUCTURES. EXTEND 12–INCHES BEYOND EDGES OF STRUCTURES.
6. ALL PIPING SHOWN IS 6" ø PVC PER DISTRICT STANDARDS.

INSPECTION REQUIREMENTS

1. CONSTRUCTION WILL BE INSPECTED IN ACCORDANCE WITH THE DISTRICT'S SIDE SEWER STANDARDS. DOUBLE INSPECTION SHALL BE REQUIRED.
2. LEAK TESTING: VAULT MUST BE FILLED WITH WATER TO TEST FOR LEAKS. VAULT AND TYPE 1 CATCH BASIN MUST HOLD WATER FOR 10–MINUTES.
3. ALL PIPING PENETRATIONS MUST BE INSPECTED. ALL PENETRATIONS MUST BE PROVIDED WITH A KOR–N–SEAL ADAPTER. UNLESS OTHERWISE DIRECTED BY THE DISTRICT.
4. TRENCHES SHALL BE LEFT OPEN SO ALL STRUCTURES, PIPING, AND BEDDING CAN BE INSPECTED AND THE SIDE SEWER AS–BUILT DRAWING PROVIDED BY THE CONTRACTOR CAN BE CONFIRMED BY THE INSPECTOR.
5. INSPECTION IS REQUIRED AT THE EXISTING SIDE SEWER STUB OF WHERE THE FINAL CONNECTION WILL OCCUR.

REV. 10/19/17

STANDARD GREASE INTERCEPTOR (1,000 GALLON MIN)

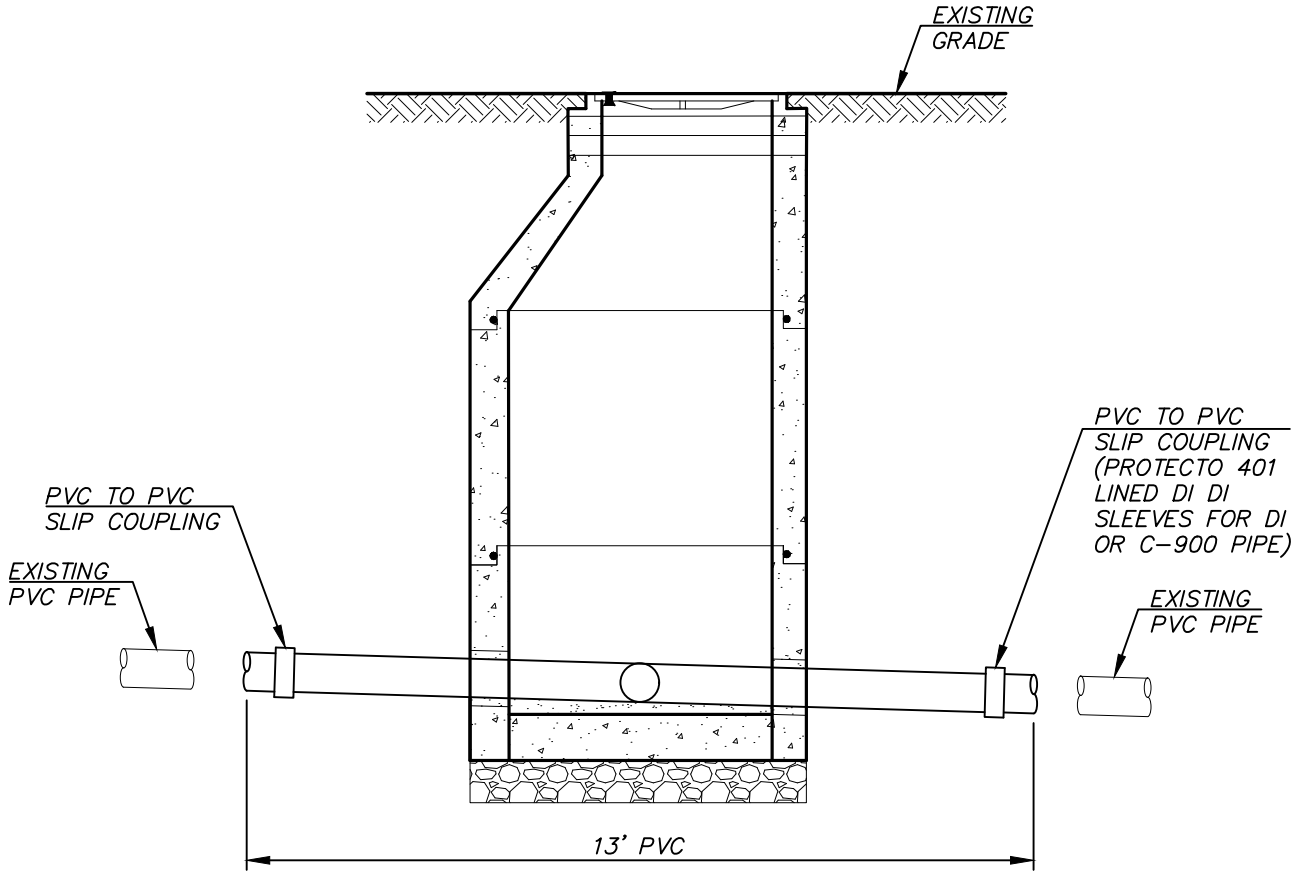

NOTES

1. PRIOR TO CUTTING THE EXISTING SEWER MAIN, THE CONTRACTOR SHALL HAVE EXACT MEASUREMENTS OF THE EXISTING PIPE INVERTS AND LENGTH MEASUREMENTS FOR INSTALLATION OF THE NEW MANHOLE AND NEW SEWER MAIN.
2. THE CONTRACTOR'S EXCAVATION SHALL BE ADEQUATE TO INSTALL THE SADDLE MANHOLE PRIOR TO CUTTING THE EXISTING SEWER MAIN.
3. THE CONTRACTOR SHALL BYPASS PUMP THE SEWER FLOW DURING THIS INSTALLATION.
4. THE CONTRACTOR SHALL HAVE A VACTOR TRUCK AVAILABLE FOR THIS CONSTRUCTION WORK.
5. SEE DISTRICT STANDARD MANHOLE DETAIL FOR OTHER SPECIFIC INSTALLATION REQUIREMENTS.
6. FOR A 72-INCH MANHOLE USE ROMAC DUCTILE IRON (DI) / PVC COUPLING TO CONNECT NEW PIPE TO EXISTING PIPE. USE 15-FOOT PIPE SEGMENT THROUGH MANHOLE.

CUT-IN ("SADDLE") MANHOLE REV. 10/19/17

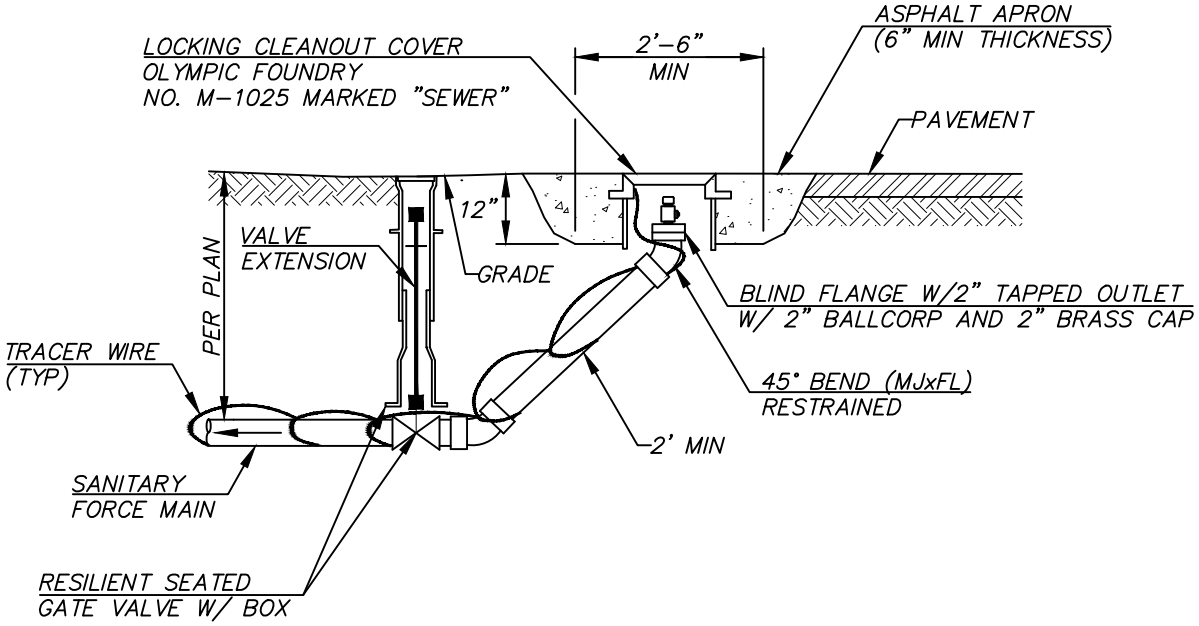

NOTES

1. VALVES, VALVE BOXES AND VALVE EXTENSIONS SHALL MEET THE SAME REQUIREMENTS AS SHOWN IN THE STANDARD WATER DETAILS. VALVE BOX COVERS SHALL BE OLYMPIC FOUNDRY 940 OR EQUAL MARKED "SEWER".

2. VALVE MARKER POSTS SHALL MEET THE SAME REQUIREMENTS AS SHOWN IN THE WATER DETAILS AND BE PAINTED AS SPECIFIED IN THE STANDARD CONSTRUCTION NOTES.

3. ALL D.I. PIPE AND FITTINGS SHALL BE PROTECTOR 401 EPOXY COATED. ALL PIPE AND FITTINGS SHALL BE RESTRAINED JOINT.

SANITARY FORCE MAIN CLEANOUT, TYPE II REV. 10/19/17

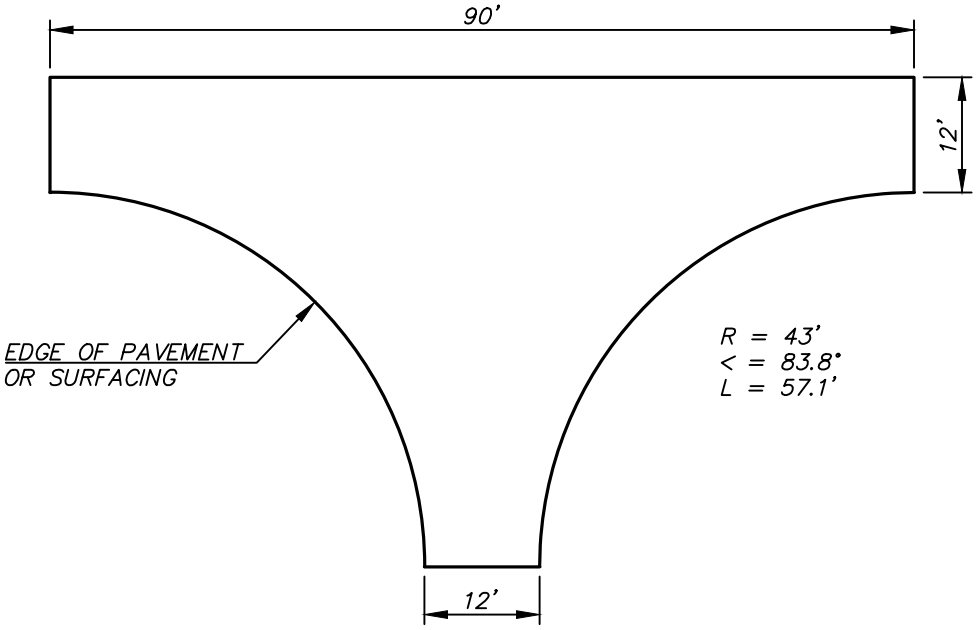

REV. 10/19/17

VACTOR TRUCK MINIMUM HAMMERHEAD TURNAROUND

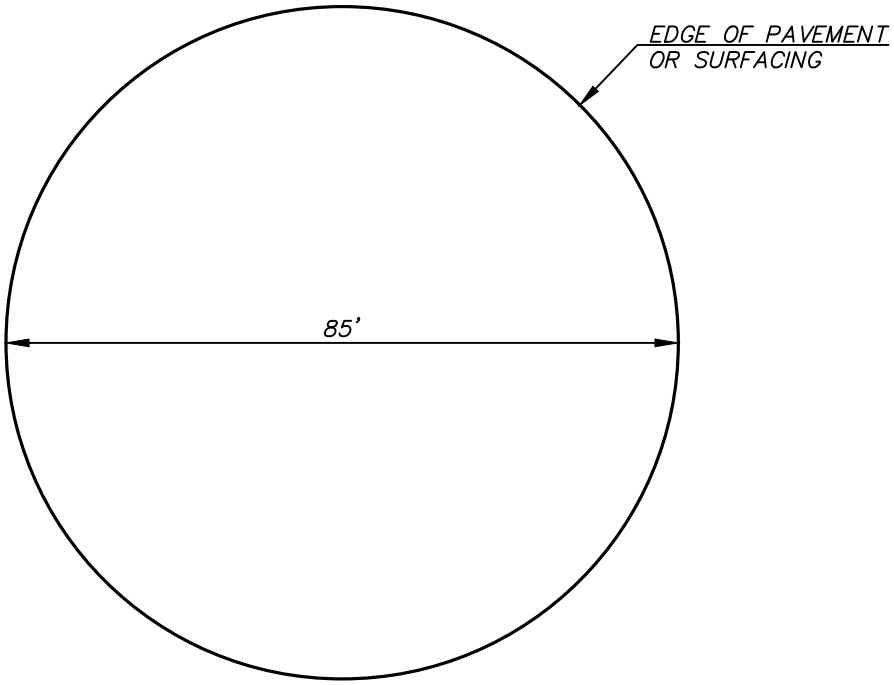

VACTOR TRUCK MINIMUM CIRCULAR TURNAROUND REV. 10/19/17

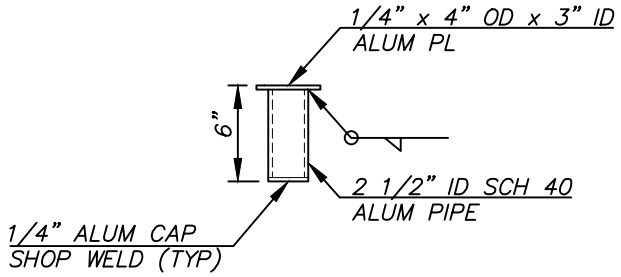

PLUG

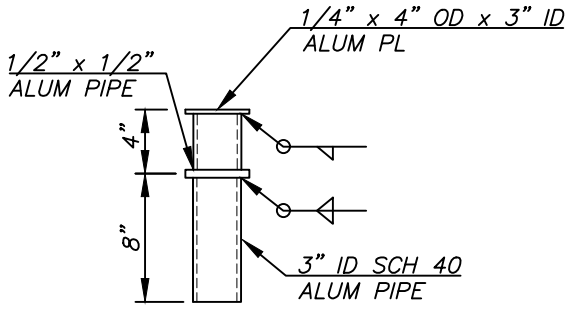

SOCKET (EMBED)

RECESSED SOCKET

REV. 10/19/17

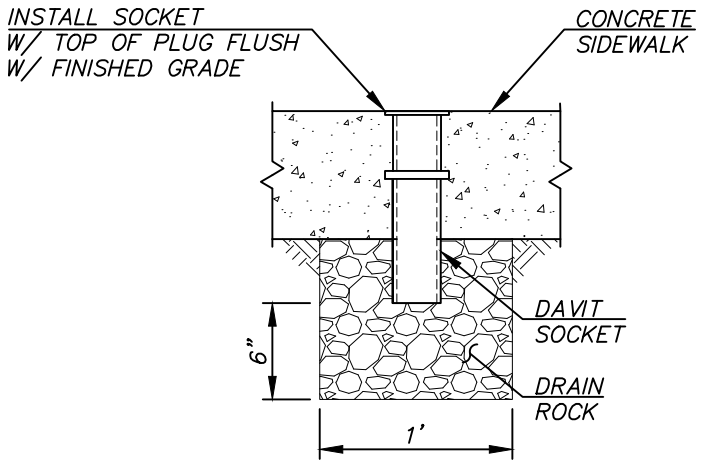

DAVIT SOCKET INSTALLATION SECTION

REV. 10/19/17

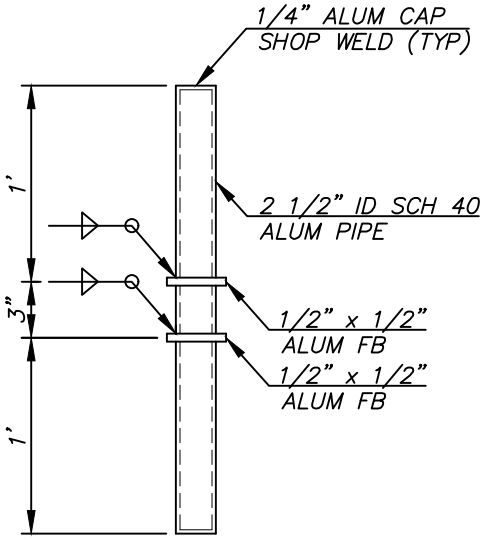

DAVIT SPINDLE

REV. 10/19/17

CROSS CONNECTION DETAILS

PROCEDURAL REQUIREMENTS

1. ALL ASSEMBLIES MUST BE ON THE WASHINGTON STATE DEPARTMENT OF HEALTH APPROVED BACKFLOW ASSEMBLY LIST.

2. ALL ASSEMBLIES ARE REQUIRED TO BE TESTED BY A WASHINGTON STATE CERTIFIED TESTER UPON INSTALLATION AND ANNUALLY. IN ADDITION, ASSEMBLIES MUST BE TESTED AFTER REPAIRS, RELOCATION, REINSTALLATION AND AFTER A BACKFLOW INCIDENT. NOTE THAT AIR GAPS INSTALLED IN LIEU OF A REDUCED PRESSURE BACKFLOW ASSEMBLY ALSO REQUIRE ANNUAL INSPECTION. TEST REPORTS MUST BE SUBMITTED IMMEDIATELY TO THE DISTRICT.

3. CONTACT DISTRICT FOR INSPECTION OF ALL NEWLY INSTALLED ASSEMBLIES.

4. A CATALOG CUT PRODUCT SUBMITTAL SHALL BE PROVIDED TO THE DISTRICT PRIOR TO INSTALLATION FOR VERIFICATION OF ASSEMBLY APPROVAL STATUS.

5. WHEN INSTALLING AN ASSEMBLY INSIDE A BUILDING, ENSURE ASSEMBLY IS LOCATED WHERE OCCASIONAL SPITTING FROM THE RELIEF VALVE PORT, A FOULED CHECK, OR WATER FLUSHED OUT DURING THE ANNUAL TEST WILL NOT BE OBJECTIONABLE. PROPER DRAINAGE MUST BE PROVIDED. DISTRICT WRITTEN APPROVAL MUST BE RECEIVED FOR INSIDE INSTALLATIONS.

6. ALL RBPA ASSEMBLIES SHALL BE PROTECTED FROM FREEZING, FLOODING AND MECHANICAL DAMAGE DUE TO WATER HAMMER AND EXCESSIVE PRESSURE BUILD UP.

INSTALLATION REQUIREMENTS

1. CONTACT DISTRICT TO ENSURE YOU ARE INSTALLING THE CORRECT ASSEMBLY FOR THE DEGREE OF HAZARD.

2. ASSEMBLY MUST BE INSTALLED AS A UNIT, INCLUDING TWO SHUT OFF VALVES, RELIEF PORT, TWO CHECK VALVES, AND FOUR TEST COCKS. ALL ASSEMBLIES ARE REQUIRED TO BE AS A UNIT IN THE CONFIGURATION THEY WERE APPROVED BY DOH AND USC.

3. THOROUGHLY FLUSH THE WATER LINE PRIOR TO INSTALLING ASSEMBLIES.

4. ASSEMBLIES MUST BE INSTALLED A MINIMUM OF 12-INCHES FROM THE BOTTOM OF THE RELIEF PORT TO FINISHED GRADE, AND NO HIGHER THAN 5-FEET FROM THE FLOOR TO CENTERLINE OF ASSEMBLY. AN ASSEMBLY INSTALLED MORE THAN 5-FEET ABOVE FLOOR OR GROUND LEVEL MUST HAVE A PERMANENT PLATFORM UNDER IT FOR THE TESTER OR MAINTENANCE PERSON TO STAND ON. THE PLATFORM MUST COMPLY WITH ALL CURRENT AND APPLICABLE SAFETY STANDARDS AND CODES IN EFFECT. ALL ASSEMBLIES MUST BE INSTALLED HORIZONTALLY, UNLESS THEY HAVE WASHINGTON STATE APPROVAL TO BE INSTALLED VERTICALLY. IF INSTALLED IN A VERTICAL CONFIGURATIONS, IT MUST BE A MINIMUM OF 12-INCHES FROM FLOOR, AND NO HIGHER THAN 5-FEET FROM THE FLOOR TO CENTER OF THE #2 SHUT OFF VALVE. ALL ASSEMBLIES MUST MAINTAIN A SUFFICIENT CLEARANCE FROM ANY WALL TO ENSURE ACCESSIBILITY OF MAINTENANCE AND TESTING. SIZES 2-1/2 INCHES AND LARGER IN DIAMETER MAY REQUIRE ADDITIONAL SPACE ON ONE SIDE OF THE ASSEMBLY. ASSEMBLIES 2-1/2 INCHES AND LARGER IN DIAMETER SHALL HAVE SUPPORT BLOCK TO PREVENT FLANGE DAMAGE.

5. REDUCED PRESSURE BACKFLOW ASSEMBLIES SHALL NOT BE INSTALLED BELOW GROUND AT ANYTIME.

6. ASSEMBLIES MUST MEET THE ABOVE REQUIREMENTS TO ENSURE ACCESSIBILITY FOR TESTING, MAINTENANCE AND APPROVAL OF THE DISTRICT. VARIANCE OF ANY INSTALLATION MUST HAVE PRIOR WRITTEN APPROVAL OF THE DISTRICT.

AIR GAP REQUIREMENTS

1. AIR GAP MUST BE TWICE THE INLET DIAMETER OF THE INLET PIPE, MINIMUM OF 1-INCH FOR 1/2" PIPE OR SMALLER.

2. THE AIR GAP MUST PROVIDE A PHYSICAL SEPARATION FROM THE BOTTOM OF THE INLET PIPING TO THE TOP OF THE OVERFLOW RIM OF THE RECEIVING VESSEL.

3. IF INLET PIPING IS CUT DIAGONALLY TO DECREASE SPLASHING, THE AIR GAP SEPARATION IS MEASURED FROM THE BOTTOM OF THE CUT TO THE RECEIVING VESSEL.

4. IF AIR GAP IS LOCATED NEAR SIDEWALLS, THE SEPARATION INCREASES TO THREE TIMES THE INLET DIAMETER OF THE INLET PIPING, MINIMUM OF 1-1/2 INCHES.

REV. 6/9/17

STANDARD RPBA NOTES & INSTALLATION REQUIREMENTS

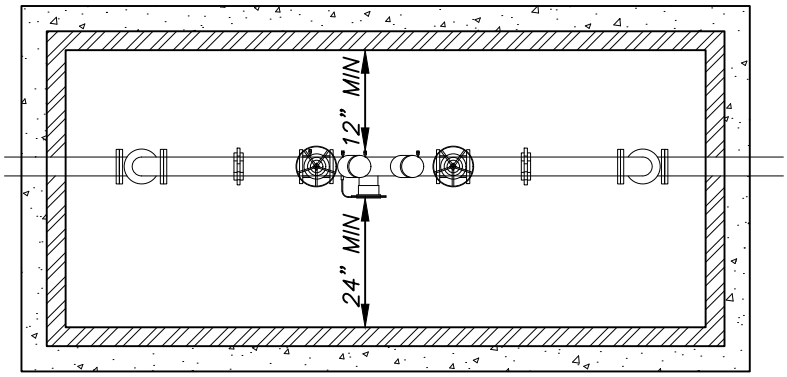

PLAN

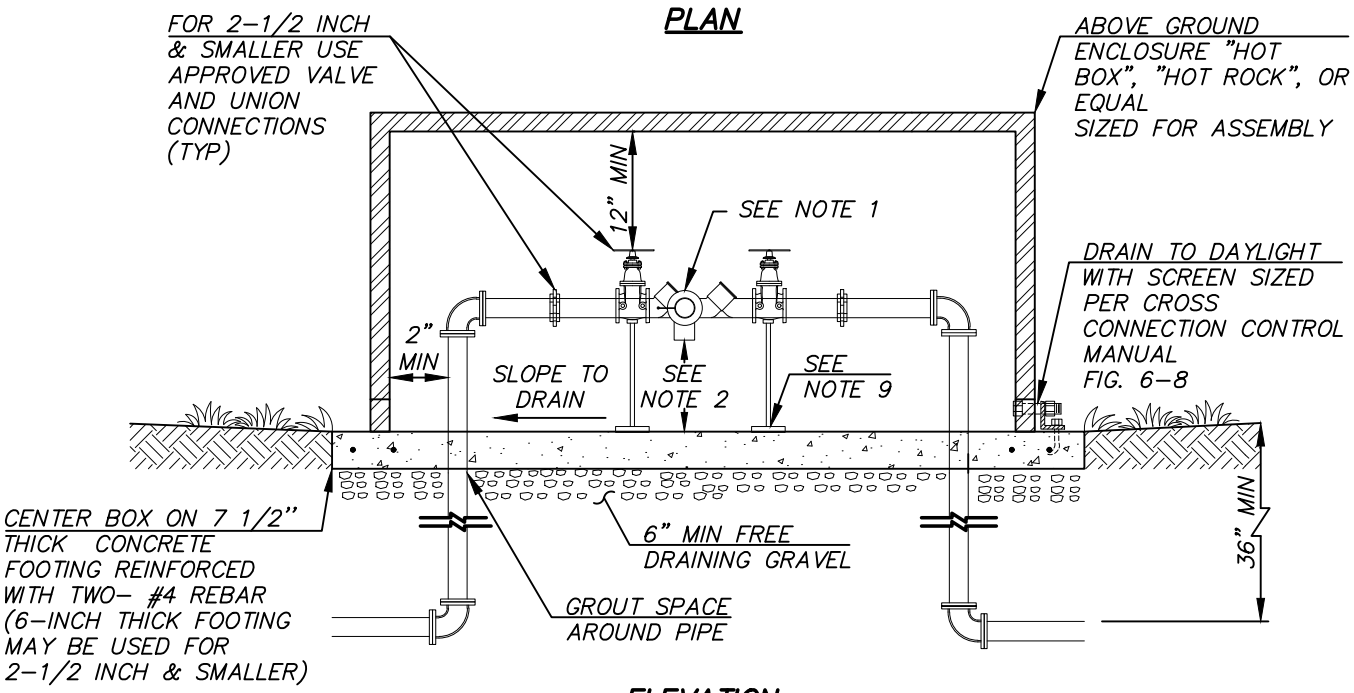

ELEVATION

RPBA INSTALLATION NOTES

1. MUST BE ON THE LATEST DEPT. OF HEALTH APPROVED LIST OF BACKFLOW PREVENTION ASSEMBLIES.
2. MUST BE INSTALLED ABOVE FINISHED GRADE, MIN. 12 INCHES TO BOTTOM OF RELIEF PORT.
3. WHEN INSTALLED INSIDE A BUILDING, A FLOOR DRAIN SIZED TO ACCEPT MAXIMUM DISCHARGE FROM THE RELIEF ASSEMBLY IS REQUIRED.
4. FREEZE PROTECTION MUST BE PROVIDED.
5. RISERS AND ALL PIPE IN BOX TO BE BRASS, COPPER, OR PVC.
6. DO NOT INSTALL IN AN AREA SUBJECT TO FLOODING. ASSEMBLIES MUST BE INSTALLED ABOVE GROUND.
7. A DISTRICT CROSS CONNECTION SPECIALIST SHALL INSPECT INSTALLATION OF DEVICE AND RECEIVE TEST REPORTS PRIOR TO ESTABLISHMENT OF WATER SERVICE OR APPROVAL. TEST REPORTS MUST BE SIGNED BY A CERTIFIED BACKFLOW ASSEMBLY TESTER AND IMMEDIATELY SENT TO THE DISTRICT.
8. SOME CLEARANCES (I.E. SIDE AND TOP) MAY NOT BE REQUIRED FOR DEVICES WITH A FULLY REMOVABLE ENCLOSURE.
9. SUPPORTS MUST BE INSTALLED FOR SIZES LARGER THAN 2-1/2".

REV. 10/19/17

REDUCED PRESSURE BACKFLOW ASSEMBLY (RPBA) INSTALLATION

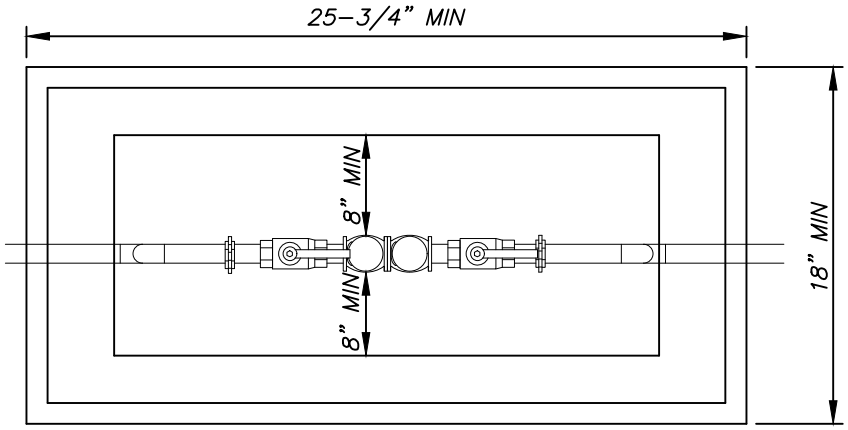

PLAN

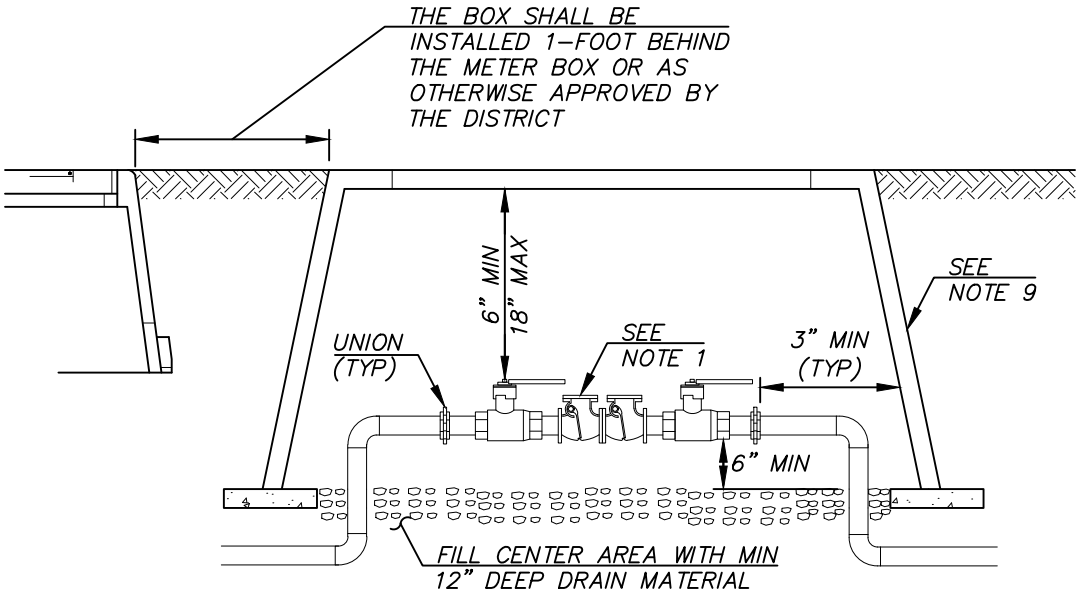

ELEVATION

DCVA INSTALLATION NOTES

1. MUST BE ON THE LATEST DEPT. OF HEALTH APPROVED LIST OF BACKFLOW PREVENTION ASSEMBLIES.
2. MAY BE INSTALLED BELOW GROUND IN AN APPROVED VAULT.
3. FREEZE PROTECTION IS THE RESPONSIBILITY OF THE OWNER.
4. RISERS AND ALL PIPE IN BOX TO BE BRASS, COPPER, OR PVC.
5. THE DCVA SHALL NOT BE INSTALLED WHERE IT MAY BECOME SUBMERGED.
6. A DISTRICT CROSS CONNECTION SPECIALIST SHALL INSPECT INSTALLATION OF DEVICE AND RECEIVE TEST REPORTS PRIOR TO ESTABLISHMENT OF WATER SERVICE OR APPROVAL. TEST REPORTS MUST BE SIGNED BY A CERTIFIED BACKFLOW ASSEMBLY TESTER AND IMMEDIATELY SENT TO THE DISTRICT.
7. FOR 2-1/2" TO 3-1/2" DCVA'S, USE A UTILITY VAULT 506-LA W/LOCKING STEEL DOOR NO. 55-332.P.
8. FOR 4" AND LARGER DCVA'S, USE A UTILITY VAULT 687-LA W/BASE 687-SB AND 2 LOCKING STEEL DOOR NO. 686-TL-2-332P.
9. FOR 1-INCH AND SMALLER DCVA USE CARSON INDUSTRIES "1220-12" OR EQUAL (21-1/2"X15") FOR 1 1/4-INCH TO 2-INCH DCVA USE CARSON INDUSTRIES "JUMBO BOX 1730-12" OR EQUAL (33-1/2"X20-1/2").

REV. 10/19/17

DOUBLE CHECK VALVE ASSEMBLY (DCVA) INSTALLATION

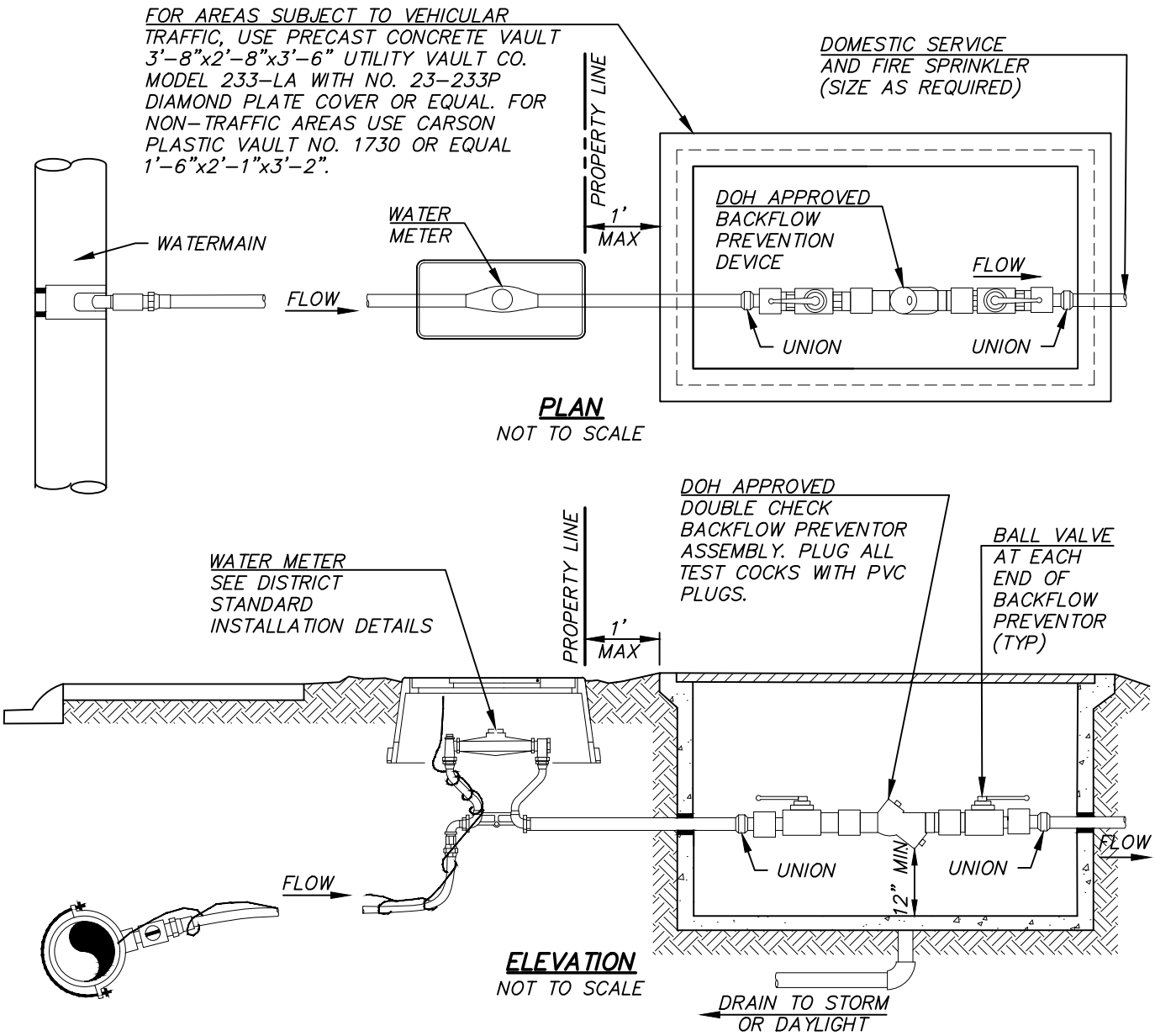

NOTE

1. NO FENCING, GATES OR OTHER OBSTACLES SHALL BE LOCATED AS TO RESTRICT ACCESS TO METER SERVICE.
2. SEE DISTRICT STANDARDS FOR WATER SERVICE METER BOX REQUIREMENTS.

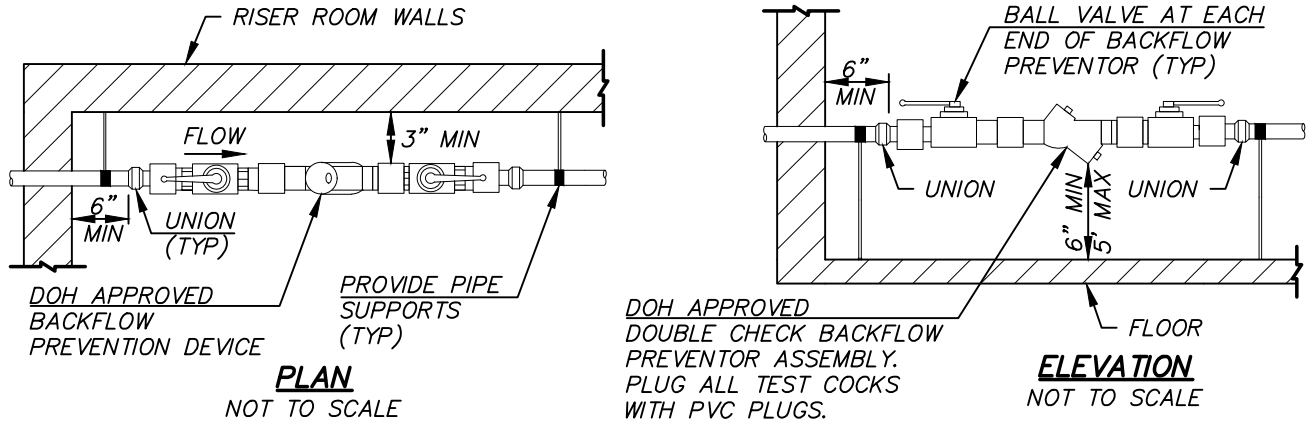

ALTERNATE/ADDITIONAL DCVA IN RISER ROOM

STANDARD FIRE SPRINKLER DCVA CONNECTION REV. 10/19/17

GENERAL DCDA NOTES

1. ALL CONSTRUCTION SHALL CONFORM TO THE APPROPRIATE FEDERAL, STATE, COUNTY OR DISTRICT REQUIREMENTS.

2. ALL DCDAs SHALL BE APPROVED FOR INSTALLATION WITHIN THE STATE OF WASHINGTON BY THE WASHINGTON STATE DEPARTMENT OF HEALTH. THE CONTRACTOR SHALL PROVIDE THE DISTRICT WITH SPECIFICATIONS AND SHOP DRAWINGS OF THE APPROVED DCDA PRIOR TO CONSTRUCTION.

3. THE SUPPLY LINE FOR THE DCDA SHALL BE DUCTILE IRON, A MINIMUM OF 4" DIA. AND MEET THE MATERIAL AND CONSTRUCTION REQUIREMENTS OF THE DISTRICT FOR WATER MAIN CONSTRUCTION.

4. THE CONTRACTOR SHALL INSTALL AT THE WATER MAIN A TEE AND 4" MINIMUM SIZED GATE VALVE ON ALL DCDA SYSTEMS. WET TAPS ARE ONLY ALLOWED ON EXISTING WATER MAINS.

5. A FLEXIBLE FITTING (MJ SLEEVE) SHALL BE INSTALLED WHEN ENTERING THE VAULT. THIS FITTING MAY BE OMITTED IF AN MJ BELL CONNECTION IS WITHIN 5 FEET OF THE VAULT.

6. THE CONTRACTOR SHALL LEVEL THE UTILITY VAULTS AND ADJUST THE COVER TO MATCH THE EXISTING GRADE OR 6" ABOVE GRADE IN UNIMPROVED AREAS.

7. THE CONTRACTOR SHALL INSTALL A LADDER-UP AS SHOWN IN THE DETAILS. SUBMIT PRODUCT INFORMATION FOR DISTRICT REVIEW.

8. ALL VAULTS SHALL BE INSTALLED WITH A 4" ZURN FLOOR DRAIN MODEL 551 W/ GRATING ON A 4" PVC DRAIN PIPE. THE DRAIN SHALL BE RUN TO DAYLIGHT OR A STORM DRAIN SYSTEM WITH A MINIMUM OF 4" SCHEDULE 80 PVC STORM PIPE. IF POSITIVE DRAINAGE FROM THE VAULT CANNOT BE ACHIEVED A SUMP PUMP SYSTEM WILL BE REQUIRED. SUMP PUMP SHALL BE ZOELLER "MIGHTY-MATE" AUTOMATIC SUBMERSIBLE PUMP. WRITTEN DISTRICT APPROVAL IS REQUIRED FOR SUMP PUMP SYSTEM. VAULT SHALL BE CONSTRUCTED SO BACKFLOW ASSEMBLY DOES NOT BECOME SUBMERGED.

9. FIRE DEPARTMENT CONNECTIONS SHALL BE LOCATED, SIZED AND INSTALLED PER THE REQUIREMENTS OF THE FIRE MARSHAL AND AS SHOWN ON THE FIRE MARSHAL APPROVED DRAWINGS.

10. IF REQUIRED, THE POST INDICATOR VALVE IS TO BE INSTALLED AT THE LOCATION APPROVED BY THE FIRE MARSHAL AND AS SHOWN ON THE FIRE MARSHAL APPROVED DRAWINGS.

11. ALL TEST COCKS INSTALLED WITH THE DCDA SHALL HAVE THE APPROPRIATE PLUGS INSTALLED.

12. SIZING OF THE DCDA AND THE DCDA SUPPLY LINE IS THE RESPONSIBILITY OF THE PROPERTY OWNER. WHERE THE DCDA IS INSTALLED WITHIN AN UNDERGROUND VAULT AS SHOWN IN THE DETAILS, THE DISTRICT WILL MAINTAIN AND OPERATE THE SUPPLY LINE BETWEEN THE MAIN AND DCDA VAULT. THE DCDA VAULT AND ALL ITEMS AFTERWARDS ARE THE RESPONSIBILITY OF THE PROPERTY OWNER.

13. BACKFLOW ASSEMBLY TYPE AND INSTALLATION REQUIREMENTS MAY VARY AND WILL BE AT THE DISTRICT'S DISCRETION BASED UPON WASHINGTON STATE DEPARTMENT OF HEALTH DRINKING WATER REGULATIONS RELATING TO CROSS CONNECTION WAC 246-290-010. THE DISTRICT REQUIREMENTS MAY BE EQUAL TO OR MORE STRINGENT THAN THE ABOVE CITED CODE.

PAINT SCHEDULE

EXTERIOR OF VAULT BELOW GRADE TWO COATS OF BLACK BITUMASTIC SOLUTION VAULT SHOULD BE DRIED WITH NO MOISTURE PRESENT PRIOR TO APPLICATION OF COATINGS.

PAINT INTERIOR PIPING AND VALVES ONLY, BACKFLOW ASSEMBLY SHALL NOT BE PAINTED.

1 - COAT RUST RESISTOR PRIMER RED #1013
2 - COATS SAFETY BLUE

DOUBLE CHECK DETECTOR ASSEMBLY NOTES REV. 10/06/17

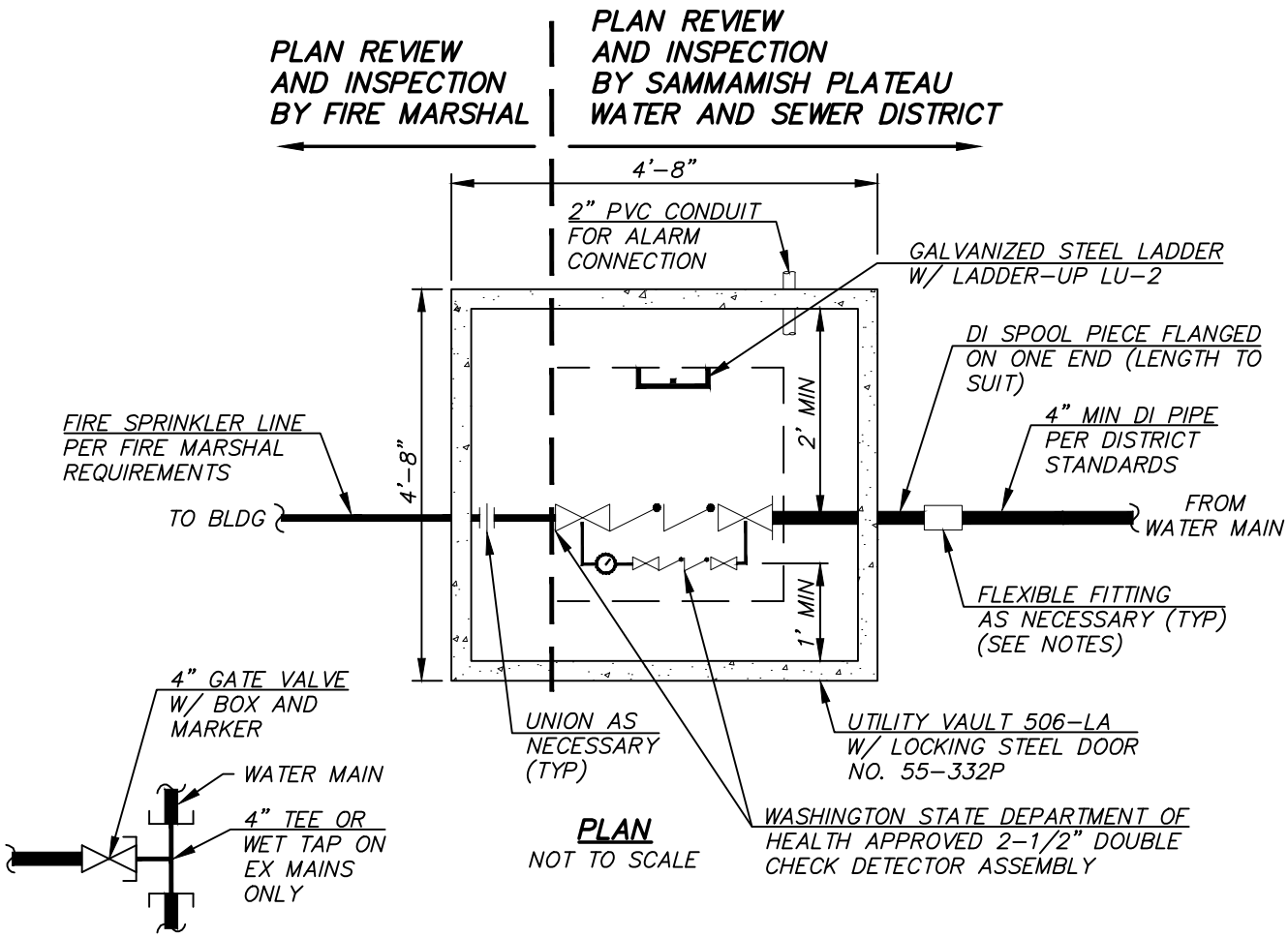

CONNECTION TO MAIN
NOT TO SCALE

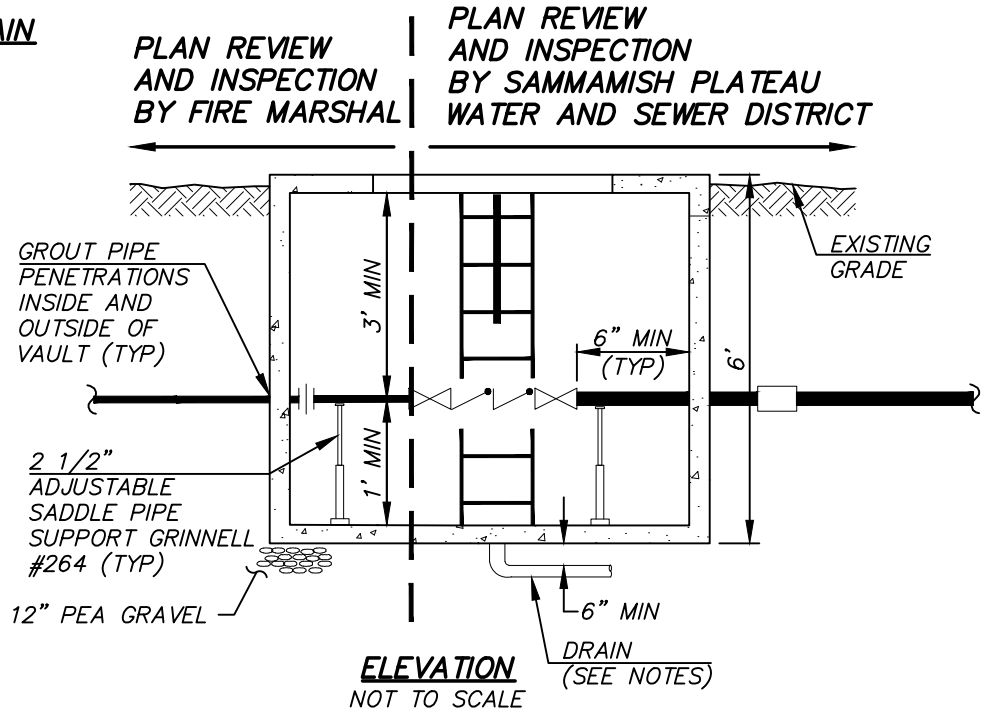

ELEVATION
NOT TO SCALE

NOTE

1. FOR LOCATION OF FIRE DEPARTMENT CONNECTION (FDC) AND POST INDICATOR VALVE (PIV), IF APPLICABLE, SEE FIRE MARSHAL APPROVED DRAWINGS.
2. DISTRICT OPERATIONS AND MAINTENANCE RESPONSIBILITY OF THE WATERMAIN ENDS AT THE FACE OF THE VAULT

2-1/2" DOUBLE CHECK DETECTOR ASSEMBLY

REV. 10/19/17

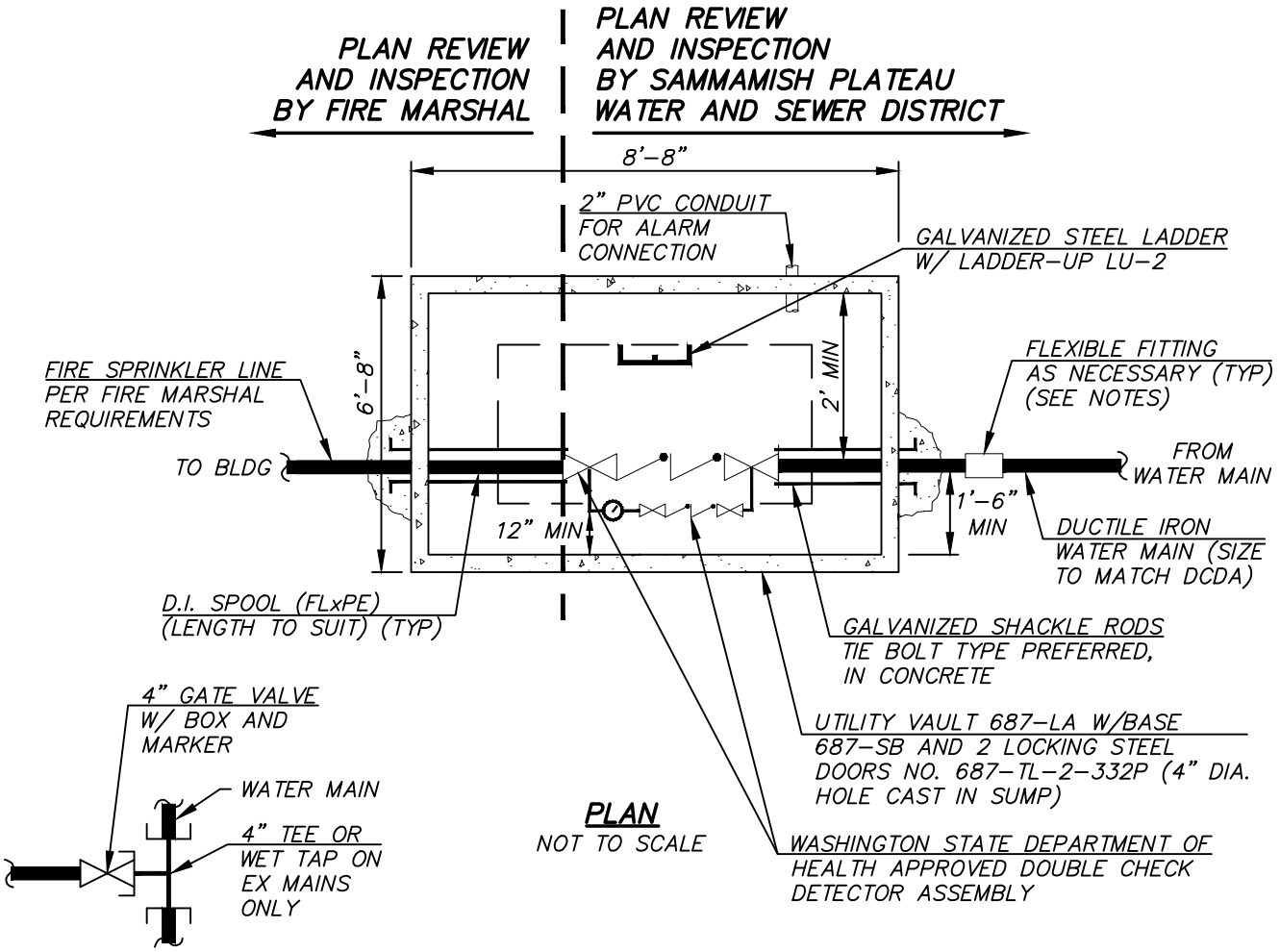

PLAN
NOT TO SCALE

CONNECTION TO MAIN
NOT TO SCALE

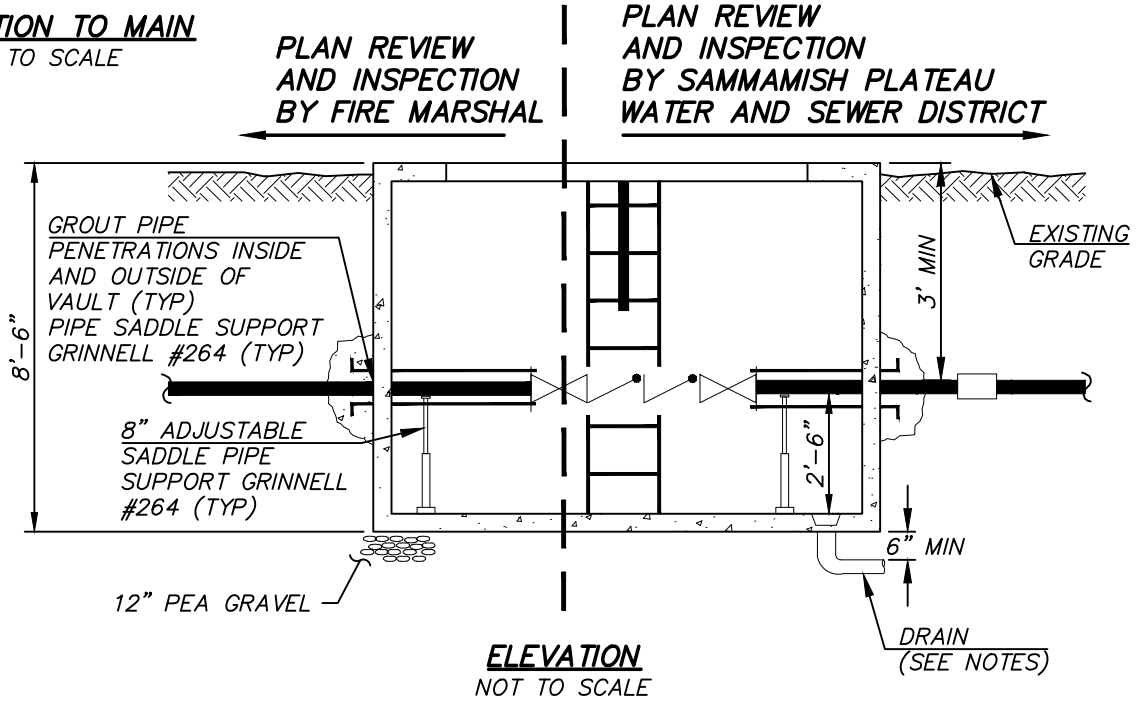

ELEVATION
NOT TO SCALE

NOTE

1. FOR LOCATION OF FIRE DEPARTMENT CONNECTION (FDC) AND POST INDICATOR VALVE (PIV), IF APPLICABLE, SEE FIRE MARSHAL APPROVED DRAWINGS.
2. DISTRICT OPERATIONS AND MAINTENANCE RESPONSIBILITY OF THE WATERMAIN ENDS AT THE FACE OF THE VAULT.

4" AND LARGER DOUBLE CHECK DETECTOR ASSEMBLY REV. 10/19/17

GRINDER PUMP PLANS

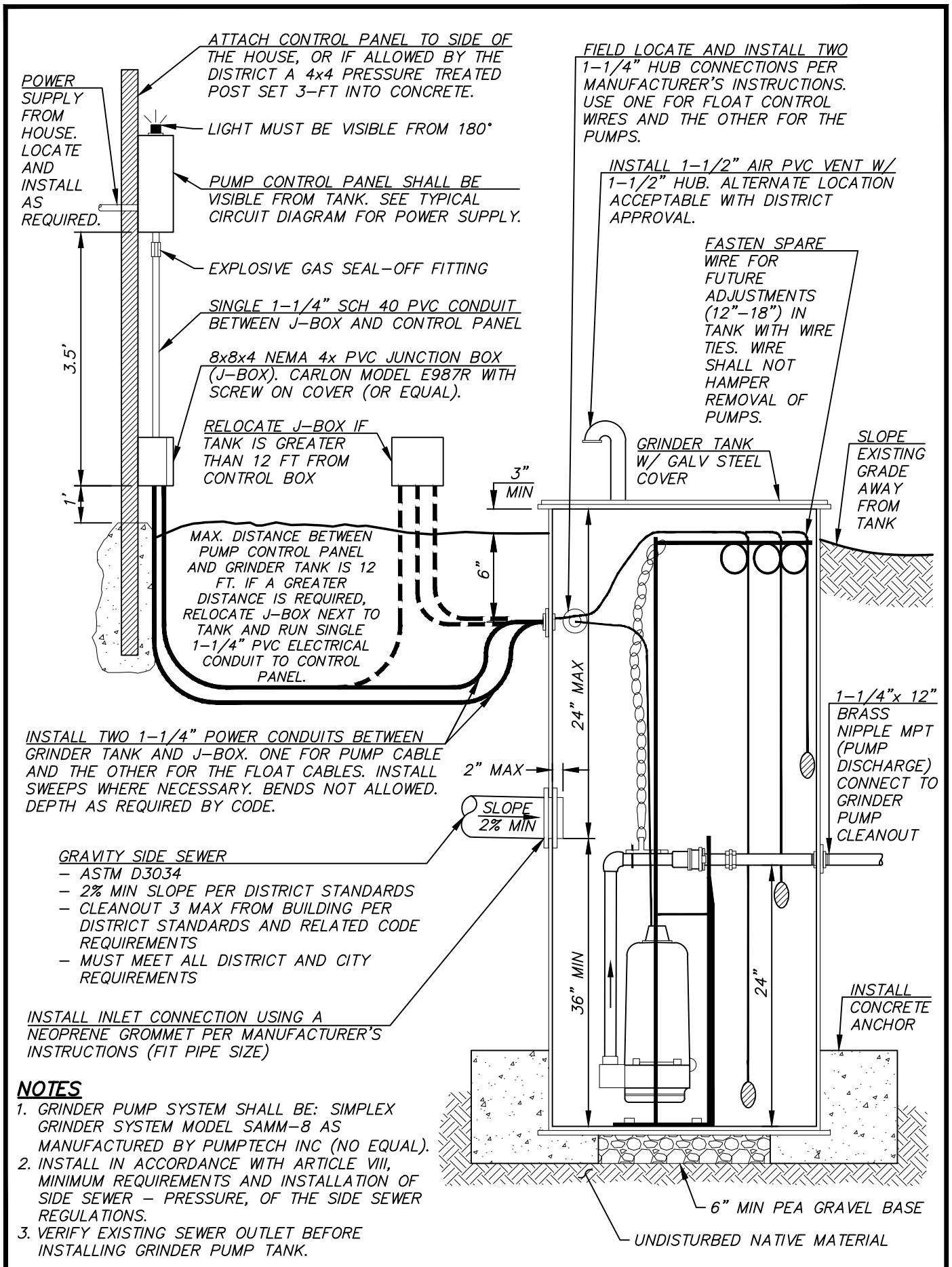

NOTES

1. GRINDER PUMP SYSTEM SHALL BE: SIMPLEX GRINDER SYSTEM MODEL SAMM-8 AS MANUFACTURED BY PUMPTECH INC (NO EQUAL).
2. INSTALL IN ACCORDANCE WITH ARTICLE VIII, MINIMUM REQUIREMENTS AND INSTALLATION OF SIDE SEWER – PRESSURE, OF THE SIDE SEWER REGULATIONS.
3. VERIFY EXISTING SEWER OUTLET BEFORE INSTALLING GRINDER PUMP TANK.

GRINDER PUMP INSTALLATION REV. 10/19/17

NOTES

1. THE GRINDER TANK SHALL BE INSTALLED WITHIN 12-FEET OF THE PUMP CONTROL PANEL. WHERE THIS DISTANCE MUST BE EXCEEDED, THE INSTALLER SHALL OBTAIN DISTRICT APPROVAL AND THEN RELOCATE THE ELECTRICAL JUNCTION BOX (J-BOX) WITHIN 1-FT OF THE GRINDER TANK AND 6-INCHES ABOVE FINISH GRADE.
2. THE TANK LOCATION SHALL BE ACCESSIBLE FOR MAINTENANCE AND REPAIR BY DISTRICT PERSONNEL.
3. TANK COVER SHALL BE APPROX 3" ABOVE FINISHED GRADE. FINISH GRADE SHALL BE FREE DRAINING AROUND AND AWAY FROM THE TANK SO THAT SURFACE WATER CANNOT POND AROUND THE STATION.
4. AIR VENT MAY BE INSTALLED IN ALTERNATIVE LOCATION WITH DISTRICT APPROVAL.
5. POSITION GRINDER PUMP TANK TO MINIMIZE NUMBER OF BENDS IN DISCHARGE PRESSURE PIPING. BENDS SHALL BE INSTALLED IN THE GRAVITY SIDE SEWER IF NEEDED.
6. NO PLANTS ARE TO BE LOCATED WITHIN 5-FT OF THE TANK. THE PROPERTY OWNER SHALL MAINTAIN A 5-FT CLEAR ZONE AROUND THE TANK.
7. THE LOCATION OF THE CONTROL PANEL SHALL BE:
   - 1.1. ACCESSIBLE FOR EASY MAINTENANCE AND REPAIR
   - 1.2. THE ALARM LIGHT MUST BE VISIBLE 180° RADIUS FROM 50-FT
   - 1.3. VISIBLE FROM THE TANK
   - 1.4. THE BOTTOM WITHIN 4.5-FT OF FINISH GRADE.
   - 1.5. FENCES, BRUSH, OR ANY OTHER OBJECT SHALL NOT HIDE THE LIGHT OR HINDER IN THE MAINTENANCE AND OR REPAIR OF THE SYSTEM

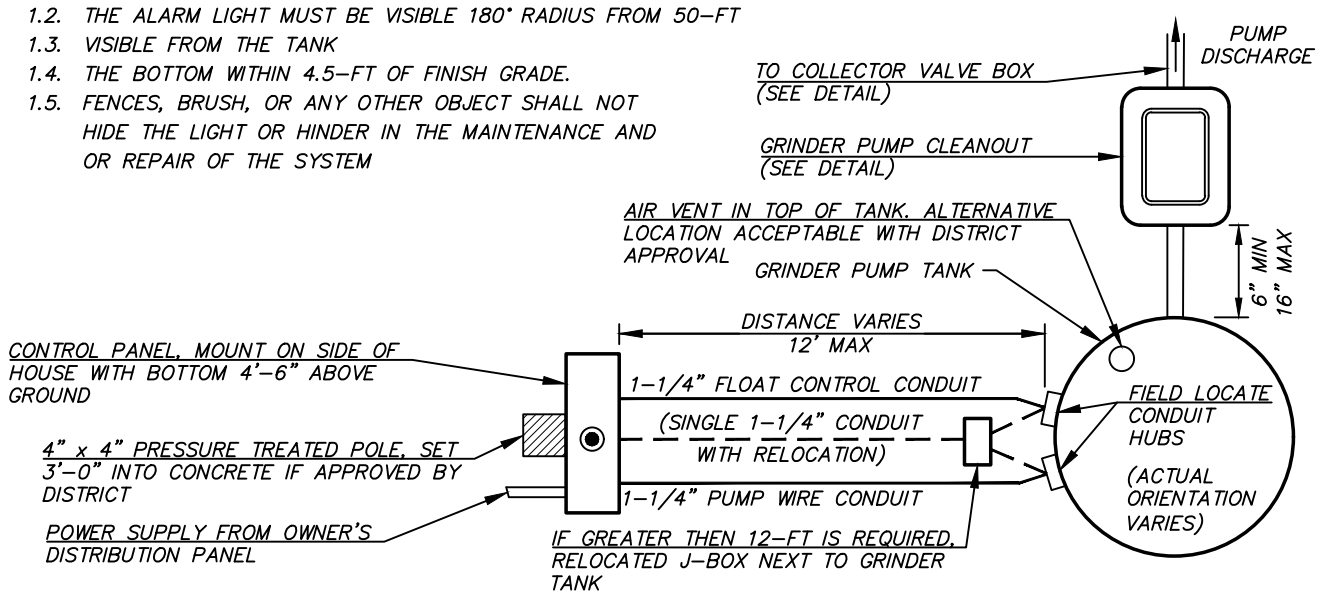

GRINDER PUMP SITE LAYOUT INSTRUCTIONS

REV. 10/19/17

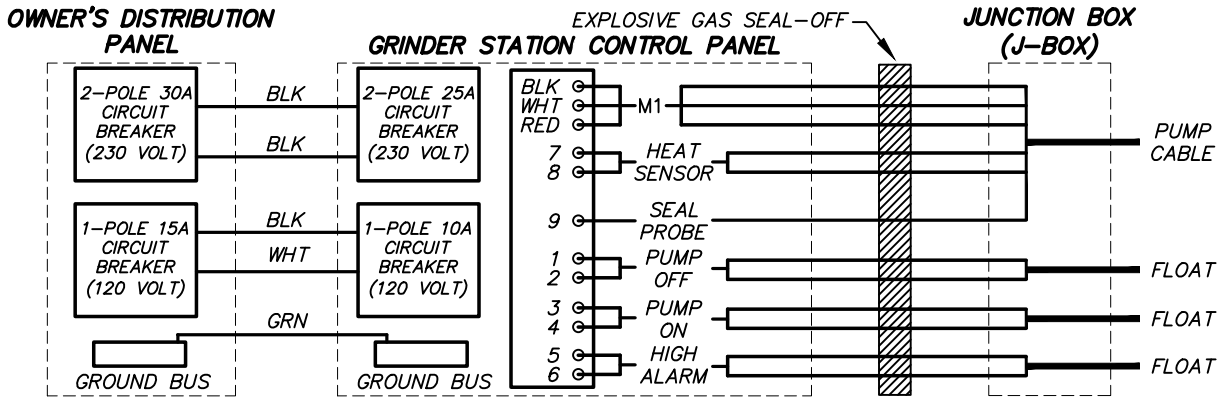

NOTES

1. PUMP AND FLOAT CABLES TO BE EXTENDED INTO AND END AT THE J-BOX USING TWO SEPARATE CONDUITS; ONE FOR THE PUMP AND ONE FOR THE FLOATS. A SINGLE CONDUIT WITH INDIVIDUAL WIRES SHALL THEN EXTENDED FROM THE J-BOX TO PUMP CONTROL PANEL.
2. RUN FROM THE J-BOX TO THE PUMP CONTROL PANEL FOUR #10 AWG THHN WIRE FOR THE PUMP (WHITE, BLACK, RED, GROUND), TWO #14 AWG THHN WIRE WITH INDIVIDUAL COLORS FOR THE PUMP SENSOR AND PROBE, AND THREE SETS OF INDIVIDUAL COLORED #14 WIRE FOR THE FLOATS.
3. AN EXPLOSIVE GAS SEAL-OFF SHALL BE INSTALLED IN THE ELECTRICAL CONDUIT JUST PRIOR TO THE PUMP CONTROL PANEL.
4. INSTALLATION MUST CONFORM TO ALL REQUIREMENTS AND REGULATIONS OF THE NATIONAL ELECTRICAL CODE. AN ELECTRICAL PERMIT AND INSPECTION IS REQUIRED WHETHER THE WORK IS PERFORMED BY THE OWNER OR A CONTRACTOR.
5. THE OWNER'S DISTRIBUTION PANEL SHALL SUPPLY ONE SEPARATE 230-V SINGLE PHASE, 30-AMP CIRCUIT FOR THE PUMP, AND ANOTHER SEPARATE 120-VOLT, 15-AMP CIRCUIT FOR THE ALARM SYSTEM.
6. THE CONTRACTOR SHALL REFER TO THE MANUFACTURER'S INSTALLATION INSTRUCTIONS FOR THE GRINDER PUMP CONTROL PANEL. THE TYPICAL CIRCUIT DIAGRAM SHOWN ABOVE IS ONLY AN EXAMPLE.

TYPICAL CIRCUIT DIAGRAM

REV. 10/19/17

ITEM	MATERIAL LIST FOR GRINDER PUMP CLEANOUT AND COLLECTOR VALVE BOX DETAILS
1	1-1/4" HDPE PRESSURE PIPE SDR 11(LENGTH TO SUIT)
2	TWO STACKED CARSON JUMBO BOX (PART #1730)
3	CARSON LID (PART #1730) MARKED "SEWER"
4	1-1/4" MALE THREADED NIPPLE SCH. 80 PVC, (LENGTH TO SUIT)
5	1-1/4" X 90° BEND THREADED SCH. 80 PVC
6	1-1/4" HDPE x 316SS MPT TRANSITION COUPLING, 6-INCH
7	1-1/4" COMPRESSION COUPLING SCH. 40 PVC
8	1-1/4" UNION BALL VALVE THREADED SCH. 80 PVC
9	1-1/4" X 3" NIPPLE THREADED SCH. 80 PVC
10	1 - 1-1/4" TEE THREADED SCH. 80 PVC
11	1-1/4" BRASS SWING CHECK VALVE
12	1-1/4" X 8" NIPPLE THREADED SCH. 80 PVC
13	1-1/4" CAP THREADED SCH. 80 PVC
14	HDPE SOCKET WELDED COUPLING
15	HDPE SOCKET WELDED REDUCER SDR 11 (SIZE TO SUIT)
16	HDPE SOCKET WELDED TEE SDR 11 (SIZE TO SUIT)

NOTES

1. ALL HDPE WELDING SHALL BE MADE USING ELECTRO-FUSION.
2. WHEN BOXES LOCATED IN TRAFFIC AREAS: WHERE BOXES ARE SUBJECTED TO ANY POSSIBLE VEHICLE LOADING, REPLACE THE CARSON BOXES WITH FOGTITE #2 CONCRETE BOXES WITH FOGTITE STEEL TRAFFIC LIDS MARKED "SEWER".

TRACER WIRE NOTES

1. ALL HDPE PIPE SHALL BE INSTALLED WITH 12-GAUGE SOLID CORE WIRE, TRACER WIRE. THE WIRE SHALL BE WRAPPED AROUND THE PIPE AS PART OF THE INITIAL INSTALLATION.
2. TRACER WIRE SHALL BE LOOPED THROUGH THE COLLECTION VALVE BOX AS SHOWN IN THE DETAIL.
3. WHERE A CUT-IN CONNECTION IS MADE TO AN EXISTING LOW PRESSURE SEWER, THE TRACER WIRES SHALL BE SPLICED TOGETHER USING BUTT CONNECTORS AND SHRINK TUBING PROTECTION.
4. TRACER WIRE SHALL EXTEND FROM THE GRINDER PUMP CLEANOUT TO THE COLLECTION VALVE BOX AS SHOWN IN THE DETAILS.

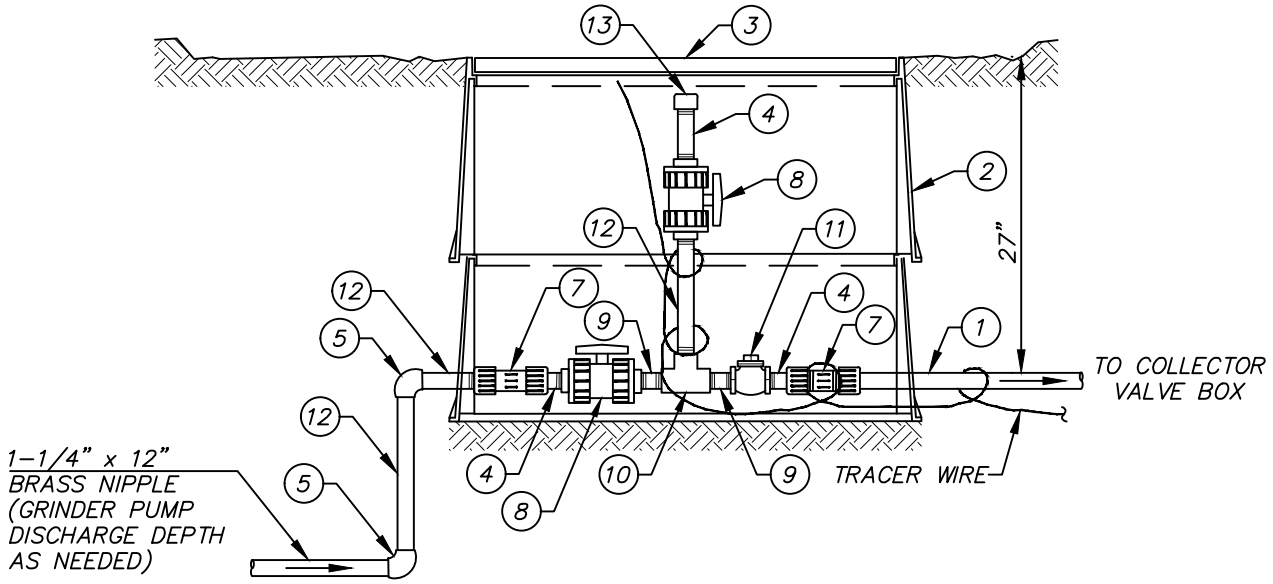

GRINDER PUMP CLEANOUT REV. 10/19/17

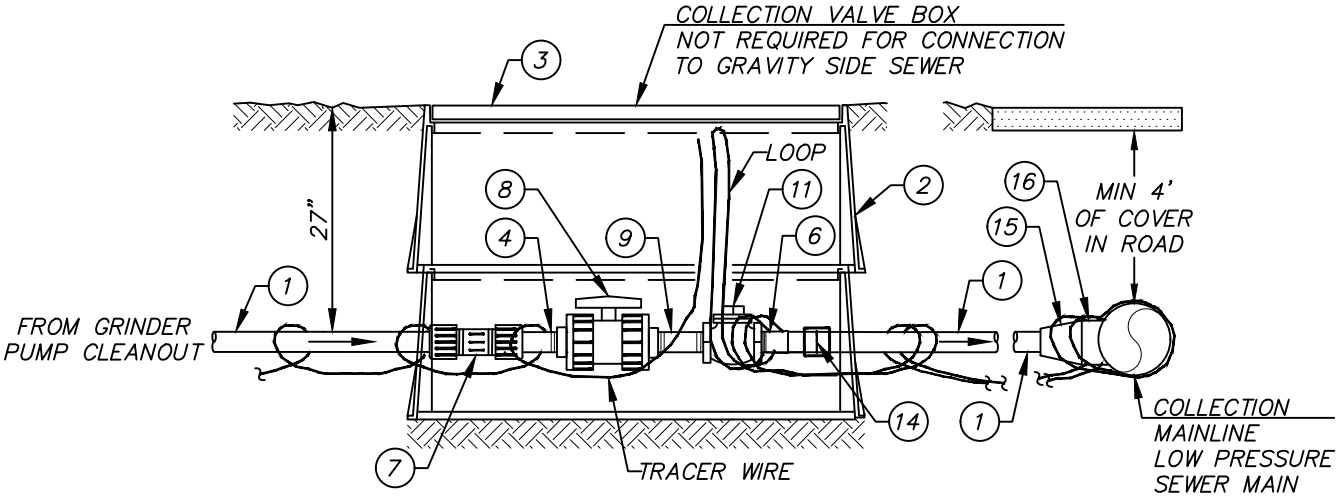

COLLECTION VALVE BOX REV. 10/19/17

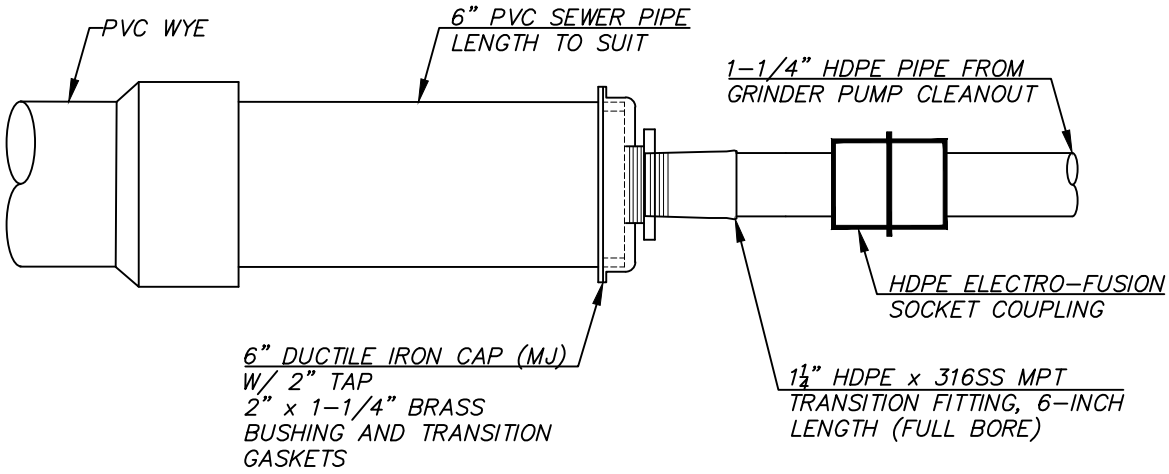

PRESSURE LINE CONNECTION

REV. 10/19/17

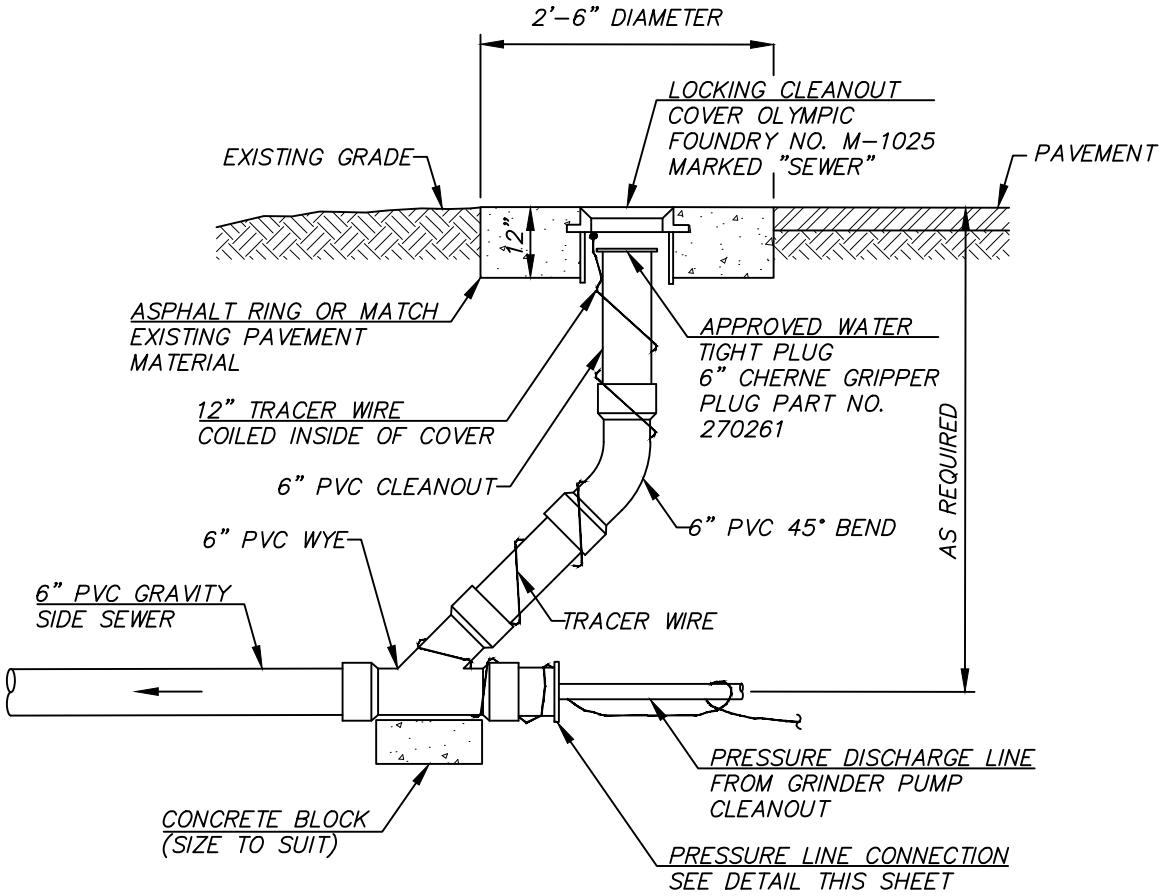

NOTES

1. ALL PVC FITTINGS SHALL BE GASKETED.
2. NO COLLECTION VALVE BOX REQUIRED WHEN CONNECTING TO A GRAVITY SIDE SEWER.

REV. 10/19/17

PRESSURE LINE CONNECTION TO GRAVITY SANITARY SEWER

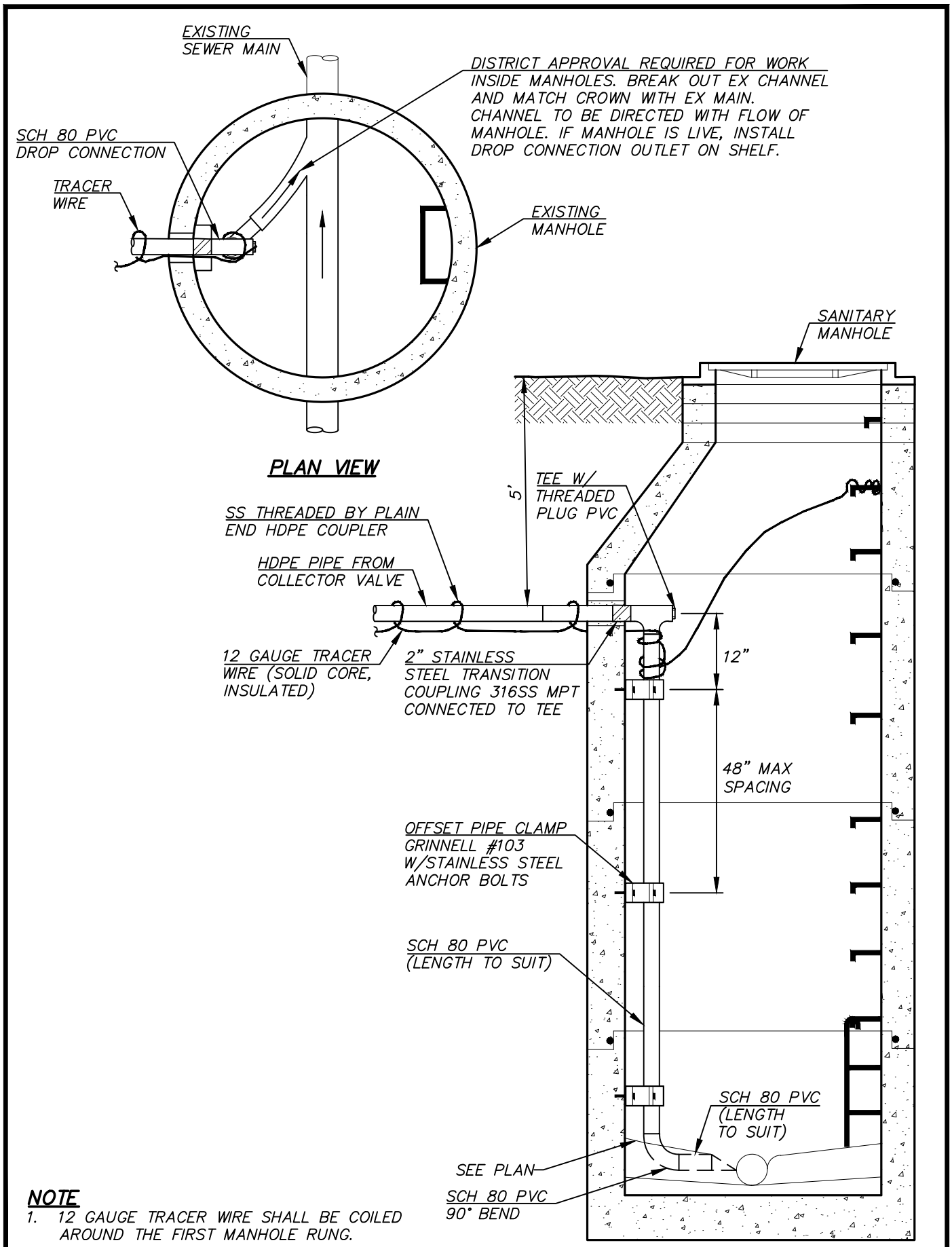

NOTE

1. 12 GAUGE TRACER WIRE SHALL BE COILED AROUND THE FIRST MANHOLE RUNG.

PRESSURE SEWER DROP CONNECTION REV. 10/19/17

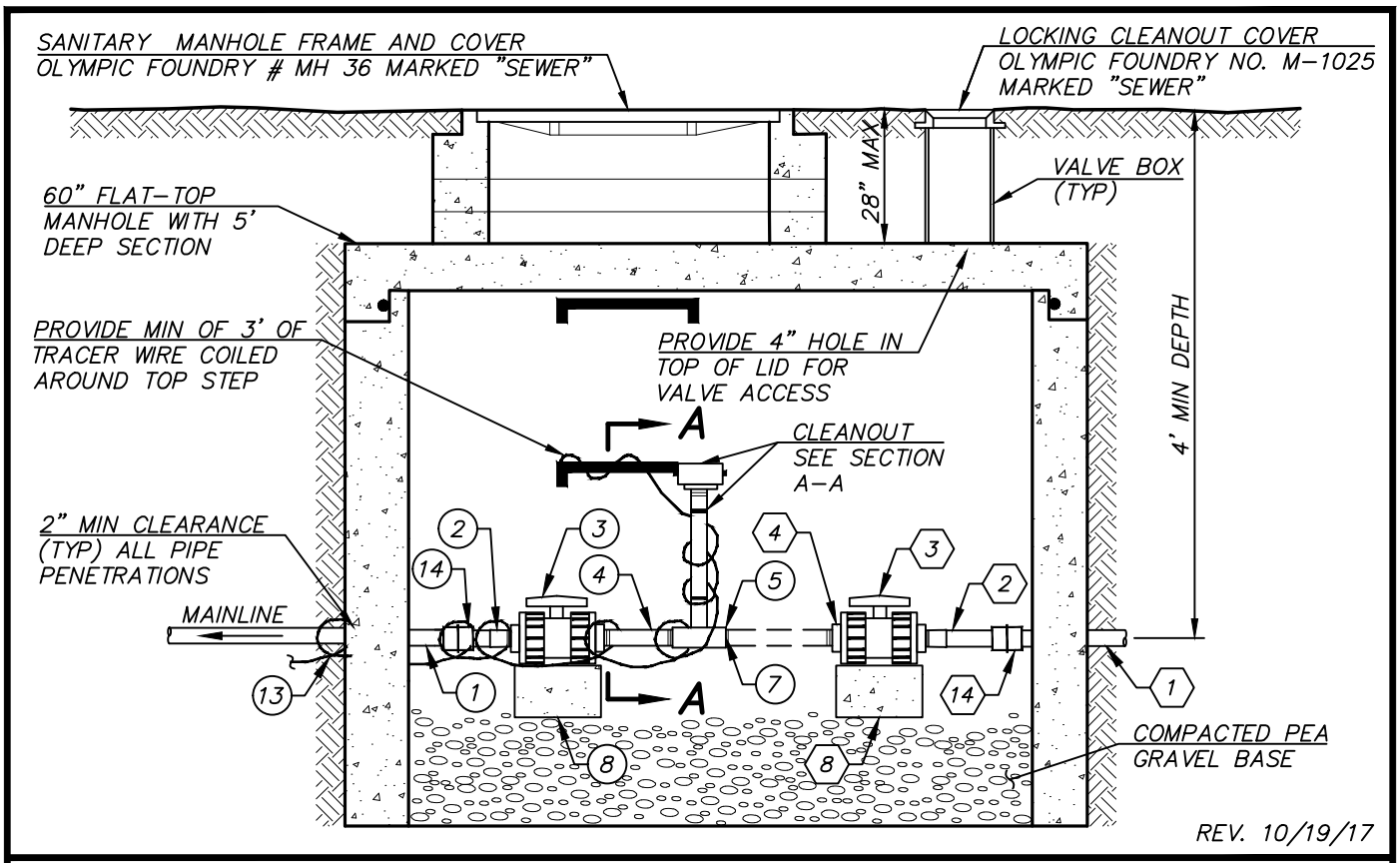

TYPE II LOW PRESSURE CLEANOUT WITH MANHOLE (TRAFFIC AREAS)

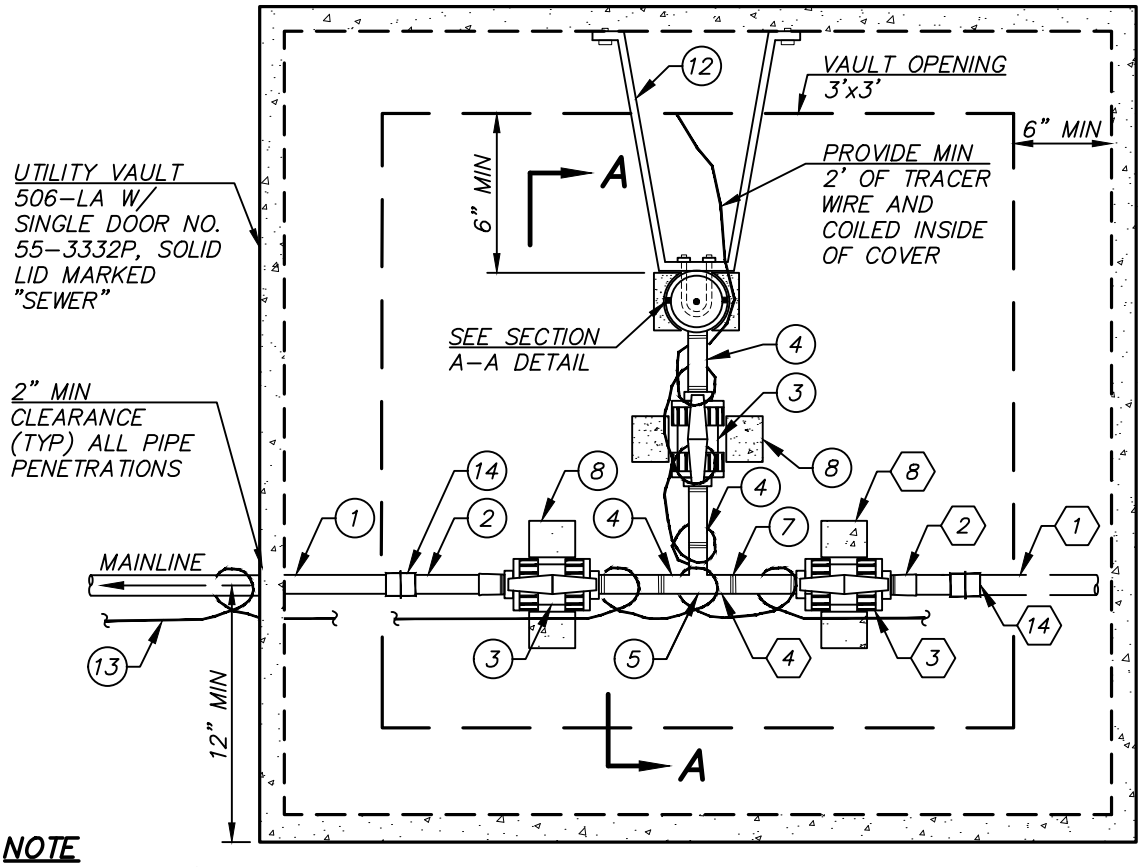

NOTE

1. MATERIAL LIST PROVIDED ON THE DETAIL TITLED LOW PRESSURE CLEANOUT NOTES AND MATERIAL LISTS.

REV. 10/19/17

TYPE I LOW PRESSURE CLEANOUT WITH MANHOLE (NON-TRAFFIC AREAS ONLY)

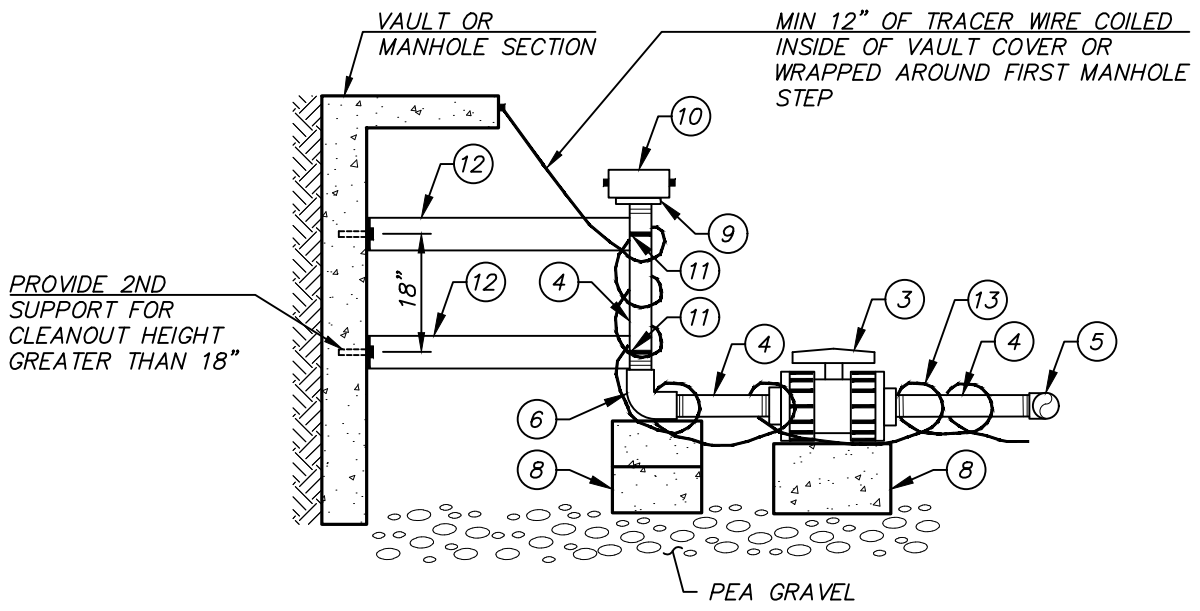

SECTION A-A FOR LOW PRESSURE CLEANOUTS

REV. 10/19/17

LOW PRESSURE CLEANOUT NOTES

1. THE PIPING SYSTEM INSTALLED IN A TYPE I AND TYPE II CLEAN OUT IS THE SAME. THE ONLY DIFFERENCE BETWEEN THE TWO TYPES IS A TYPE I REQUIRES A PRE-MANUFACTURED VAULT, WHILE A TYPE II REQUIRES A FLAT-TOP MANHOLE SECTION.

2. LOW PRESSURE CLEANOUTS SHALL BE INSTALLED AT A MINIMUM OF EVERY 500-FT AND AT THE END, OR TERMINUS, OF THE LOW PRESSURE SEWER MAIN.

3. THE MANHOLE SECTION AND/OR VAULT SHALL BE INSTALLED LEVEL AND SHALL DRAIN TO DAYLIGHT OR STORM SYSTEM. THE COVER AND/OR LID SHALL BE ADJUSTED TO GRADE.

4. WHERE THE CLEAN OUT IS INSTALLED AT THE TERMINUS OF A MAIN, THE PVC PLUG(ITEM 7) SHALL BE INSTALLED INTO THE END OF THE PVC TEE (ITEM 5), ALLOWING FOR FUTURE MAIN EXTENSIONS.

MATERIAL LIST

1. ALL PARTS SHALL BE THREADED PVC, SCHEDULE 80, WITH THE SAME DIAMETER AS THE SEWER MAIN (EXCEPT AS NOTED).

(X) MATERIALS REQUIRED FOR LOW PRESSURE CLEANOUT

⟨X⟩ MATERIALS REQUIRED FOR EXTENSION OF SEWER MAINLINE AS PART OF CURRENT OR FUTURE WORK

ITEM	ITEM NAME
1	HDPE PRESSURE PIPE SDR 11
2	HDPE x 316SS MPT TRANSITION FITTING, 6-INCH LENGTH (FULL BORE) DIAMETER SHALL BE SAME SIZE AS THE SEWER MAINLINE
3	UNION BALL VALVE, PVC
4	NIPPLE, PVC
5	TEE, PVC
6	90° ELBOW, PVC
7	PLUG, PVC (MIP)
8	CONCRETE BLOCK - (SIZE TO SUIT)
9	MIP X 2 1/2" MNST SWIVEL BRASS HOSE ADAPTOR (PROVIDE REDUCER AS REQUIRED)
10	2 1/2" FNST CAP W/CHAIN
11	ALUMINUM U-BOLTS BOLTED TO SUPPORTS WITH STAINLESS STEEL NUTS
12	1-1/2" X 3/16" ALUMINUM BAR, BENT AS SHOWN IN TYPE I CLEANOUT DETAIL AND ATTACHED TO CONCRETE WALL WITH STAINLESS STEEL ANCHOR BOLTS
13	TRACER WIRE, INSULATED 12-GAUGE SOLID CORE WIRE (WRAP TRACER WIRE AROUND ALL PIPES DURING INSTALLATION)
14	HDPE ELECTRO-FUSION SOCKET WELDED COUPLING

REV. 10/19/17

LOW PRESSURE CLEANOUT NOTES AND MATERIAL LIST

PART FIVE - DRAWING STANDARDS

5.1 GENERAL

A. Plan Set

1. All plans shall be ink on a reproducible mylar cut sheet, 22”x34” in size. The title block for each sheet shall include:
   a) Name of the project
   b) Owner/developer's name
   c) Address and telephone number
   d) Engineering firm's name, address and telephone number
   e) Date the drawings were prepared
   f) Dates and identification of any revisions to the drawings
   g) Page number of the sheet within the plan set

2. Each set of plans shall include a cover sheet unless the plans are shown completely on one sheet. The cover sheet (or single drawing sheet) shall include:
   a) Name of the project – if the improvements are being constructed as part of a larger development, the name and number of the division being constructed under this agreement and the name of the larger development shall be shown
   b) Plat name or Short Plat Number and the agency (County or City) who has jurisdiction over the development of the project
   c) Section, township, range, and existing King County tax parcel number(s) where the project is located
   d) Vicinity map
   e) List of drawings, including District standards
   f) North arrow and scale designation
   g) Datum used (1988 NAVD or latest District standard required) and benchmark location and elevation shall be surveyed at North American Vertical Datum of 1988 [NAVD 88]. Benchmark must be a known, registered benchmark by King County or the Cities of Sammamish or Issaquah. Assumed or surveyor set benchmarks will not be allowed. Elevations derived from as-built drawings or similar sources shall not be used as the basis for vertical control. The drawings shall be assigned the local projection of Washington State Plane North, NAD 1983 (HARN), US Feet.
   h) Legend of symbols used
   i) Identification of existing and proposed streets
   j) Seal and signature of the Professional Engineer responsible for the plan set

k) Signature box for the District's General Manager to sign and date the drawings, indicating District approval of the plans

l) Fire district in which the project is located

m) The following disclaimer: "Underground utilities are shown in the approximate location. There is no guarantee that all utility lines are shown, or that the location, size, and material is accurate. The Contractor shall uncover all indicated piping where crossing, interferences, or connections occur prior to trenching or excavation for any pipe or structures, to determine actual locations, size, and material. The Contractor shall make the appropriate provision for protection of said facilities. The Contractor shall notify ONE CALL at 1-800-424-5555 and arrange for field location of existing facilities before construction."

3. The set of drawings shall include:

   a) Erosion and sedimentation control plans

   b) Water and sewer facilities on separate drawings unless the requirement is waived by the District

   c) Location and general footprint of all buildings, shown with faded lines, with finished floor elevations for all floors

   d) All rockeries, fences, street trees, driveways, mailboxes, and other surface features, shown with faded lines

   e) Existing and finished grading (contour lines), shown with faded lines

   f) Symbols and font sizes conforming to the District drawing standards listed in Table 5.1.

4. Preliminary Plans sent for review may be provided on regular print paper.

B. Overall Drawing(s)

Where more than one sheet is required to cover all of the construction area, an overall drawing will be required. If the improvements being constructed are in a division of a larger development, the extent of the larger development shall be indicated.

The overall drawing(s) shall show the proposed location of water lines, valves, fire hydrants, blowoffs, sewer lines, manholes, cleanouts and other appurtenances. If the water and sewer plans are shown separately, separate overall drawings shall be provided for the water and sewer improvements.

The overall drawing shall be at a standard engineering scale. The overall drawing shall include the entire construction area. An index map shall be included, showing the sheet layout with associated page numbers, on the overall sheet.

TABLE 5-1

STANDARD DRAWING WATER SYMBOLS

SYMBOL EXISTING	SYMBOL PROPOSED	DESCRIPTION	(ABBREVIATION)
		CAP/PLUG	
		COUPLING	(CPL)
		GUARD POST	(GP)
		REDUCER	(RED)
		THRUST BLOCK	(TB)
		WATER METER	(WM)
		FIRE HYDRANT	(FH)
		FLANGE/BLIND FL	(FL)/(BL FL)
		MECHANICAL	(MJ)
		PUSH-ON/HUB	
		RESTRAINED JOINT	(RJ)
		AIR/VACUUM RELEASE VALVE	
		BLOW-OFF	(BO)
		BUTTERFLY	(BF)
		CHECK	(CK)
		GATE/GENERAL	(WV)
		PLUG VALVE	(PV)
		TEE	(TEE)
		BEND	(BND)
		CROSS	(X)
		PRESSURE REDUCING VALVE	(PRV)
		ZONE VALVE	
		WATER MAIN	

SYMBOLS SHOWN ON DRAWINGS SHALL BE AT LEAST THE SIZE SHOWN IN THIS TABLE, REGARDLESS OF DRAWING SCALE.

TABLE 5-1 (CONTINUED)

STANDARD DRAWING SEWER SYMBOLS

SYMBOL EXISTING	SYMBOL PROPOSED	DESCRIPTION (ABBREVIATION)
		SEWER CLEAN OUT (CO)
		SEWER MANHOLE (SSMH)
		SEWER COLLECTION VALVE BOX
		SEWER AIR/VACUUM RELEASE VALVE
		GREASE INTERCEPTOR/OIL WATER SEPERATOR
		GRINDER PUMP
		SEWER MAIN
		SEWER FORCE MAIN

SYMBOLS SHOWN ON DRAWINGS SHALL BE AT LEAST THE SIZE SHOWN IN THIS TABLE, REGARDLESS OF DRAWING SCALE.

C. District Standards Sheets

The latest issue and/or amendment of the District Standard sheets with standard notes and details, at the date of the Pre-Construction Meeting with the District, shall be incorporated in the Plan Set, and the numbering of the sheets shall reflect their inclusion.

D. Shop Drawings

Shop drawings, when required, shall be provided on the standard size and type sheet.

The Shop drawings may be at any scale that will adequately show the detail necessary for fabrication or construction of the piping, equipment, machinery, etc. depicted on the shop drawing.

5.2 WATER SYSTEMS

The water system design shall be a plan view, at a scale that clearly shows the facilities to be constructed (typically, 1”=20’ to 1”=30’). A smaller scale may be used if approved by the District. The design drawing shall show clearly the relationship of the water main to existing and proposed underground utilities as well as its relationship to street paving, curb, gutters and sidewalks. Water facilities drawings shall be separate from sewer facilities drawings unless combined drawings for simple designs are approved by the District.

A profile of the water system is required. The location of air/vacuum release valves shall be shown in profile. All other utility crossings shall be shown on the profile drawing. All new or proposed water improvements shall be depicted by a heavy solid line. All existing water improvements shall be depicted by a thin, dashed or faded line. The proposed sewer improvements shall be shown with faded lines on the water drawings. All existing sewer improvements shall be depicted by a thin, or faded dashed line. When showing existing water and sewer, and/or other existing and proposed underground utilities, care should be taken to clearly identify each line with unique letters or line types. The different lines should be shown in the drawing legend. If the District has approved combined water and sanitary sewer drawings, all new sewer shall be depicted by a heavy dashed line. Use the following nomenclature for identifying single ¾” water meters:

INSTALL 1” SERVICE LINE WITH SINGLE ¾” METER SETTER

For double ¾” water meters, use the following nomenclature:

INSTALL 1” SERVICE LINE WITH DOUBLE ¾” METER SETTER

Callouts for larger meters are similar.

All storm drainage facilities, existing or proposed, shall be shown with faded lines on the water and sewer drawings. In addition, the complete storm drainage improvement drawings shall be submitted for District review with the water and sewer drawings.

All valves, fire hydrants, fittings and other appurtenances shall be called out and fully located by stationing along centerline of street, or base line of easements, etc. The callouts shall indicate the line size and material. Fittings and appurtenances shall have indications of their size, type and connection type (i.e., flange or mechanical joint). Clusters of fittings and/or appurtenances shall be called out together.

Meter sizes and service line sizes shall be called out for all irrigation meters and domestic meters for multi-family/commercial/industrial developments. In single family residential developments, the service line size used for the lots shall be called out as noted above, and any locations where meters in excess of 3/4" are required shall be called out.

All drafted symbols, line work, and notes shall be completely legible on the final paper print. All notes shall be a minimum of 1/10th inch high (7 point font). Fonts shall be a plain, non-serif style, such as Arial. Shading or hatching in areas containing water improvements symbols, lines, or notes shall not be allowed.

Profile drawings are required by the District to show the relationship of the water line to finish grade, other underground utilities, crossings of railroad tracks, streets, rivers and drainage ditches, changes in the vertical alignment of the water line, and/or other places where it would clarify construction.

5.3 SEWER SYSTEMS

The design of the sewer system shall include both a plan and profile view. The Horizontal scale shall be a scale that clearly shows the facilities to be constructed (typically, 1”=20’ to 1”=30’), and the Vertical scale shall be 1”=5’ or 1”=10’. A smaller scale may be used if approved by the District. The design drawing shall show clearly the relationship of the sewer main to existing and proposed underground utilities, especially all storm drainage facilities, as well as its relationship to street paving, curb, gutters and sidewalks. The sewer line locations shall be dimensioned from the street centerline where possible. Sewer facilities drawings shall be separate from water facilities drawings unless combined drawings for simple designs are approved by the District.

All new or proposed sewer improvements shall be depicted by a heavy dashed line. All existing sewer improvements shall be depicted by a thin, dashed or faded line. The proposed water improvements shall be shown with faded lines on the sewer drawings. All existing water improvements shall be depicted by a thin, or faded solid line. When showing existing water and sewer, and/or other existing and proposed underground utilities, care should be taken to clearly identify each line with unique letters or line types. The different lines should be shown in the drawing legend. If the District has approved combined sanitary sewer and water drawings, all new water shall be depicted by a heavy solid line.

All storm drainage facilities, existing or proposed, shall be shown with faded lines on the water and sewer drawings. In addition, the storm drainage improvement drawings shall be submitted for District review with the water and sewer drawings.

All manholes, cleanouts and other appurtenances shall be clearly labeled in both plan and profile and shall be fully located by stationing along centerline of street, or base line of easements, etc. All invert elevations for each manhole shall be shown on both plan and profile views, together with a

designation for the size of pipe, direction entering/leaving the manhole, and IN or OUT. Profiles shall also include the size, length, slope and pipe classification for each run of pipe from manhole to manhole. Fittings and appurtenances shall have indications of their size, type and connection type. All crossings and conflicts with other utilities shall be shown in both plan and profile. The plans shall also indicate all necessary easements and improvements in the area of the sewer construction, or that would be affected by the construction shall also be shown.

If the finished floor elevation of the lowest sewered floor is below the rim elevation of the manhole upstream of where the building's side sewer connects to the main, a backwater valve is required by the Uniform Plumbing Code. Each drawing plan sheet that contains such a building shall include the following note:

> *The Uniform Plumbing Code requires backwater valves on building sewers where the finished floor is below the rim of the upstream manhole. Backwater valves, if they are installed, must be located upstream of the cleanout closest to the building. The District is not responsible for their installation, maintenance, or operation. The side sewer permit for a building with a backwater valve shall include a hold harmless clause which indemnifies the District against any liability, damage, or cost which may accrue from the installation and operation of a backwater valve in the side sewer.

Each building or lot whose finished floor elevation indicates the need for a backwater valve shall have a large asterisk (*) next to the building number or lot number as reference to the note.

All drafted symbols, line work, and notes shall be completely legible on the final paper print. All notes shall be a minimum of 1/10th inch high (7 point font). Fonts shall be a plain, non-serif style, such as Arial. Shading or hatching in areas containing sewer improvements symbols, lines, or notes shall not be allowed. It is preferred to have the plan and profile of each sewer from manhole to manhole shown on the same sheet with the same horizontal scale. When possible, the profiles shall be extended directly below or above the plan view. If including the plan and profile on the same sheet results in excessive fragmentation of the sewer plan view, profiles may be shown together on separate pages, clearly referencing the sheet number containing the plan view. Where profiles are shown on separate pages from the plan view, a horizontal scale of 1"=50' and a vertical scale of 1"=5' may be used for the profile.

5.4 AS-BUILT DRAWINGS

A. Project Field Drawings

The Developer/Contractor shall maintain, on the jobsite, project field plans marked to indicate District approved plan revisions made in the field and other details of construction. These changes and details of construction shall be provided to the Engineer of Record to include on the "As-Built" record drawings. All surface features of the water and sewer systems, together with the staked location of watermain bends, shall be field-surveyed by a Washington State licensed Surveyor during construction and the information used to prepare the As-Built drawings. The surveyed locations of all features shall be shown with an "X" on the draft as-built drawings superimposed on the water and sewer plans. (Point-Plot Map at the same scale as the as-built

drawings). The Developer's Engineer shall also submit to the District an electronic table of the surveyed points including identification number or description of the coordinates using the following projection: Horizontal: Washington State Plane North, North American Datum 1983/91, HARN, US Feet. Vertical Datum: NAVD 88. The Point-Plot Map and the draft as-built drawings shall be submitted electronically in addition to paper copies. The stationing, coordinates, callouts, and position of facilities shall be revised to represent the as-built location. If the original design drawings were prepared in digital format using AutoCAD or other automated drafting/design software, the revisions during construction shall be incorporated onto the as-built record drawings digitally. The drawings shall be on a minimum 4-mil mylar format, clearly marked in the lower right-hand corner as "As-Built". For manually-drafted drawings, if the "As-Built" record drawing is not on the original District Approved plan, a mylar of the original District approved plan shall also be provided. The Developer/Contractor's project field drawings shall be submitted to the District for review with the As-Built record drawings.

B. Changes in Street Names and/or Lot Lines/Numbers

If, during construction, street names, lot lines, and lot numbers were modified from those shown on the approved design drawings, the as-built drawings shall show the corrections. Street names shall match the names shown on the final plat certificate or similar document.

C. Plats and Short Plats

Plat drawings shall include the new tax lot numbers (10 digits) shown on the final plat certificate or similar document. Each lot may contain only the four (4) digit minor number. Short plat drawings shall include the short plat number.

D. As-Built Submittals

In addition to the as-built mylar drawings, the following shall be provided:

1. Copy of the recorded plat or short plat documents

2. Two (2) sets of full-size prints without District standards, plus one (1) full-size set of prints with District standards (for use at 11-month inspection)

3. One (1) sets of half-size prints (11"x17")

4. If the design was prepared using computer-aided drafting, provide (an) electronic file(s) containing the As-Built drawings. The electronic as-built drawing files shall be in a form compatible with AutoCAD Version 14 **or later** with the as-builts being assigned the local projection of Washington State Plane North, North American Datum 1983/91, HARN, US Feet and elevation Datum NAVD 88.

5. A single file containing all scanned images of the as-built drawings in Adobe's PDF format. PDF images shall be the full size of the original document.

E. Water System As-Built Details

The details of construction for water systems shall include, but not be limited to:

1. Bends - location of bends used, or deletion of bends shown on the plans and not used.

2. Meter boxes - changing the meter box location from one lot corner to another; measurements to meter boxes not located on lot corners from at least two permanent items such as catch basins, hydrants or manholes.

3. Service line locations - route the service line follows, if other than perpendicular to the street, from the main to the meter box. This is especially important in cul-de-sacs or bubbles.

4. Valves - The as-built location of all valves greater than 1 inch shall be shown.

5. Fittings - Any approved changes to the fitting callouts on the design plans should be noted.

6. Other Utilities - Crossings of other utilities and detailed locations of other utilities where they run parallel to the water main and are closer than 3 feet horizontally.

F. Sewer System As-Built Details

The details of construction for sewer systems shall include, but not be limited to, the items indicated below. Items 2 through 6 may be shown in a table on the drawing where the side sewers are shown.

1. Side sewer stubs - exact side sewer stub locations including all of the following measurements on each side sewer:

2. Distance from the downstream manhole to the side sewer tee.

3. Distance from the mainline to the wye (if double side sewer).

4. Distance from the wye to the ends of the six (6) inch stubs.

5. Perpendicular distance from the side property line to the end of the six (6) inch stubs.

6. Depth of the end of the stub below finished grade and invert elevation.

7. Manhole inverts - all inverts to be verified by survey.

8. Manhole locations in unpaved areas - the as-built location of all manholes shall be shown, as determined by surveying described above.

9. Cleanout locations in unpaved areas - the as-built location of all cleanouts shall be shown, as determined by surveying described above.

10. Fittings - any changes to the fitting callouts on the design plans should be noted.

11. Force main bends - location of bends used, or deletion of bends shown on the plans and not used.

12. Other utilities - crossings of other utilities and detailed locations of other utilities where they run parallel to the sewer main and are closer than 3 feet horizontally.

ANY CHANGES TO THE PLANS AS APPROVED SHOULD BE NOTED.

Appendix J
Water Quality Monitoring

This page intentionally left blank.

SAMMAMISH PLATEAU WATER & SEWER DISTRICT
KING COUNTY, WASHINGTON

RESOLUTION NO. 4780

RESOLUTION OF THE BOARD OF COMMISSIONERS OF SAMMAMISH PLATEAU WATER AND SEWER DISTRICT, KING COUNTY, WASHINGTON, AUTHORIZING AND ADOPTING

DRINKING WATER QUALITY POLICY STATEMENT

WHEREAS, the Sammamish Plateau Water and Sewer District is an RCW Washington Title 57 Water-Sewer District serving potions of the Cities of Sammamish and Issaquah, and unincorporated King County; and

WHEREAS, the quality of the drinking water the District provides its customers is paramount; and

WHEREAS, the District Board of Commissioners has determined the need to adopt a Drinking Water Quality Policy Statement to establish Board policy in relation to drinking water standards, groundwater and aquifer protection, and outreach an transparency; and

WHEREAS, said Drinking Water Quality Policy Statement is attached to this Resolution as Exhibit A; now, therefore,

BE IT RESOLVED, by the Board of Commissioners of Sammamish Plateau Water & Sewer District, King County, Washington, as follows:

1. The Board of Commissioners of Sammamish Plateau Water and Sewer District hereby adopts the Drinking Water Quality Policy Statement (Exhibit A).

ADOPTED by the Board of Commissioners of Sammamish Plateau Water and Sewer District, King County, Washington, at a regular open public meeting held on the day 7th of May 2018.

Individual Commissioner's Vote on this Resolution:

Approved: ✓
Opposed:
Abstained:
Absent:

Lloyd Warren, President and Commissioner

Approved: ✓
Opposed:
Abstained:
Absent:

Mahbubul Islam, Vice President and Commissioner

Approved: ✓
Opposed:
Abstained:
Absent:

Mary Shustov, Secretary and Commissioner

Approved: ✓
Opposed:
Abstained:
Absent:

Tom Harman, Commissioner

EXHIBIT A

DRINKING WATER QUALITY POLICY STATEMENT

Sammamish Plateau Water and its customers derive its drinking water from a combination of surface water and groundwater resources. In 2017, the District provided approximately 1.9 billion gallons of water to meet the needs of its customers. Approximately 81% (1.54 billion gallons) were pumped from the District's independent groundwater wells, and approximately 19% (0.36 billion gallons) came from the regional (CWA/SPU) surface water supply. The District is fortunate to have secured a diverse and long term water supply for current and future needs. However, protecting the quality of the water provided to our customers is paramount to the District's Board of Commissioners. This is particularly relevant to our ground water resources which, unlike regional surface water, are directly under the purview of the District. In recognition of the District's responsibility to its customers, the Board has established the following policies in regards to managing and preserving drinking water quality on behalf of its ratepayers:

- Drinking Water Standards:

  Drinking water quality standards are established nationally by the United States Environmental Protection Agency (USEPA), and at the state level by the Washington Department of Health (WDOH). Standards are established on the basis of best available science, and may change over time. The District recognizes the authority of these agencies and is committed to conducting all testing and monitoring to ensure, where possible, that the quality of its water meets or exceeds state and federal standards. It is further recognized that water quality and standards evolve over time. An example is the EPA's unregulated contaminant monitoring reporting for compounds of an evolving nature which may impact drinking water. The District will defer to the USEPA and WDOH for evolving standards, while exercising diligence within this guidance to identify and mitigate adverse impacts to water quality which may pose health risks to its customers. It is anticipated that with advances in laboratory testing, and the further identification of potential contaminants, additional water sampling and treatment considerations may be required. It should also be noted that the District is solely responsible for maintaining compliance with water quality standards for its groundwater resources, and that the City of Seattle and the Cascade Water Alliance bear responsibility for policy and compliance as it relates to surface water from the regional supply system. As a matter of exercising ongoing diligence, the District will consider future exceeding state and/or federal drinking water standards after evaluating health impacts, treatment and/or mitigation options, and costs.

- Groundwater and Aquifer Protection

  The District recognizes the value of its groundwater resources and the need to preserve groundwater and the aquifer which supports it as sustainable resources. As such the District will engage in proactive aquifer and water quality monitoring. The District will maintain data on groundwater levels within the aquifer, and monitor the water quality background of raw groundwater. Understanding the fluctuations in groundwater levels provides informative data regarding seasonal changes in groundwater depth, and supports water rights management, and long term changes in the aquifer which may affect groundwater supply. Background water quality monitoring supports a proactive approach in assessing water quality trends, including supply management affecting water quality.

  Land use and development impacts, particularly stormwater management, pose unique risks to the long-term health of the aquifer. A lack of clearly aligned ordinances and administrative codes, meant to protect groundwater, pose unique challenges and political dynamics. Since land use and stormwater management fall under the jurisdiction of other units of government, the District will be an advocate for groundwater interests and sustainability with land use and stormwater management agencies. The District will monitor the codes and policies of the local land use agencies, and collaborate with those agencies on codes and initiatives which provide long term aquifer protection. The District will also collaborate with other water purveyors to advance county and state regulations and polices intended to protect groundwater and the aquifer from adverse impacts of development, stormwater management, and reclaimed water.

- Outreach and Transparency

  The District's efforts to protect the aquifer and its groundwater resources will be based upon full transparency, and will include regular outreach to inform its customers. Outreach will be implemented through the District's annual communications plan objectives, which has identified water stewardship and transparency as key message themes. In conjunction with its outreach program, the District will also engage its customers to solicit feedback and conversation regarding water quality, including enhancing the quality of drinking water above state and/or federal standards.

In adopting this Drinking Water Quality Policy Statement, the Board of Commissioners recognizes the evolving and dynamic environment within which a public water utility operates. In meeting the primary needs and interests of those it serves, the District will continue to be an advocate and steward for its customers and drinking water quality, while conducting business in an open, transparent, and engaging manner.

Coliform Monitoring Plan

Meets the requirements of the 2016 Revised Total Coliform Rule
Revised November 6, 2017

Introduction and Objectives

Sammamish Plateau Water and Sewer District (the District) developed this Coliform Monitoring Plan (Plan) as part of its most recent Water Comprehensive Plan Update. This Plan has been developed to meet requirements in the Washington Administrative Code (WAC) 246-290 that apply to Group A Public Water Systems.

On April 1, 2016, the U.S. Environmental Protection Agency (EPA) revised the 1989 Total Coliform Rule. The Washington Department of Health (DOH) will implement the rule, which will continue to protect public health by ensuring the quality of the drinking water distribution system by monitoring for the presence of bacteria. Group A water systems finding microbial contamination must find and fix problems that allow contamination to enter a system. Under the Revised Total Coliform Rule (RTCR), if a water system has unsatisfactory coliform sample results, water suppliers must submit a water system assessment report to DOH and immediately correct the problem.

While drinking water systems do not have the ability to evaluate the microbial quality of all water in all locations of their distribution system in a cost-effective manner, a coliform monitoring program allows systems to evaluate water quality in many locations throughout their system on a monthly basis.

This Plan has been developed to meet the following objectives:

- To meet the 2016 DOH Revised Total Coliform Rule (RTCR) standards.
- To ensure representative routine coliform sampling.
- To establish repeat sampling sites both upstream and downstream of the routine sites.
- To provide documentation of how the District conducts coliform sampling.

- To enhance the District's water quality monitoring.

System Information

Sammamish Plateau Water and Sewer District (Water System ID# 409009) is located in King County, Washington. This special purpose district public water supply system serves 63,148 customers (as of December 2016) via groundwater sources and interties, as well as surface water from regional and adjacent purveyors. Table 1 lists each source, type of use, treatment, and capacity, as presented in the Water Facilities Inventory. The District also has two interties with Northeast Sammamish Sewer and Water District and two interties with Cascade Water Alliance for the purposes of drinking water supply.

Table 1. The District's Groundwater Sources of Supply and Treatment

Groundwater Supply Source	Type	Treatment	Capacity (gpm)
Well 1R	Permanent	Corrosion Control, Fluoridation, Chlorination	500
Well 2.1	Permanent	Mn Filtration, Corrosion Control, Fluoridation, Chlorination	300
Well #2.2	Permanent	Mn Filtration, Corrosion Control, Fluoridation, Chlorination	500
Well #4R	Permanent	Mn Filtration, Ferric Chloride, Fluoridation, Chlorination	1450/1800
Well #7	Permanent	Corrosion Control, Fluoridation, Chlorination	2,000
Well #8	Permanent		3,200
Well #9	Seasonal		2,200
Well #10	Permanent	Corrosion Control, Fluoridation, Chlorination	500
Well #11.1	Permanent	Mn Filtration, Ferric Chloride, Fluoridation, Chlorination	389
Well #11.2	Permanent		1,450/1,600
Well #12R	Permanent	Mn Filtration, Fluoridation, Chlorination	200
Well #13R	Permanent	Mn Filtration, Fluoridation, Chlorination	260

The District's distribution system is separated into two hydraulically separate zones, the Plateau Zone and Cascade View Zone. No piping connects these zones.

Plateau Zone: As of 2016, this zone served 17,498 service connections. The District utilizes six storage tanks: a 3 million gallon (MG) tank, a 2 MG tank, two 4 MG tanks, a 7 MG tank, and a 2.25 MG tank. The Plateau Zone is divided into five major pressure zones that includes several smaller zones created to serve areas with variable topography. Additionally, 5 booster pump stations and 41 pressure-reducing valves serve this area.

Cascade View Zone: As of 2016, this zone served 705 service connections. The District utilizes two storage tanks: a 600,000-gallon tank and 275,000-gallon tank. The Cascade View Zone is divided into three primary pressure zones and two smaller zones. Additionally, two booster pump stations and five pressure-reducing valves serve this area.

The District also receives surface water from the Cascade Water Alliance (CWA) through two regional interties:

- CWA Regional North intertie located at 24398 NE 80th Street, Redmond in the Cascade View Zone (Sample Station 62.) Water is wheeled through the City of Redmond system.
- CWA Regional South connection located at 940 1st Avenue NE in Issaquah, serving the Plateau Zone (Sample Station 63.)

The District both provides water to and receives water from Northeast Sammamish Sewer and Water District (NESSWD) during typical operations. Both utilities share a 3 million gallon tank. The District will need to coordinate with that supply system during a contamination event. NESSWD does not currently chlorinate their water supply.

The District has emergency interties with the Northeast Sammamish Sewer and Water District, Union Hill Water Association, Ames Lake Water Association and the City of Issaquah.

Coliform Monitoring Requirements

The following subsections outline the coliform monitoring requirements that apply to the District.

Required Minimum Number of Samples

As of the end of 2016, the District served a population estimated to be around 63,148. According to WAC 246-290-300, the District is required to collect at least 70 coliform samples throughout their distribution system each month.

Routine Sample Locations and Schedule

The Revised Total Coliform Rule requires routine coliform samples be collected from representative points in the distribution system at regular weekly time intervals. The District collects coliform samples that are analyzed in a state certified laboratory for the presence or

absence of total coliform. A satisfactory test indicates that no coliform are present. An unsatisfactory test shows positive for the presence of coliform bacteria. Further testing is conducted on unsatisfactory samples to determine whether fecal coliform or *E. coli* are present.

The District collects a single sample at 70 unique sites each month. The District has developed a routine of sampling 17-18 coliform sites weekly. The District collects all routine monthly samples at its dedicated sampling stations. Table 2 in Section D and the maps in Section I both indicate which week of each month samples are collected at a given site. The samples in each weekly group are distributed geographically throughout the District's distribution system in order to provide a snapshot of bacterial and water quality conditions throughout the system on a weekly basis. In addition to coliform, the sites are sampled for chlorine residuals, and selected sites are sampled for disinfection by-products quarterly.

The sampling locations are shown on the attached map in Section I, "Overall TCR Sampling Map." Four additional maps are attached that show the coliform samples collected during each weekly routine.

Repeat Sample Site Selection

The District has designated specific sites for repeat sample collection. The District will attempt to use these locations for repeat collection. If one of these sites is unavailable, the District will use an alternate site that still meets the repeat sampling criteria. Upstream and downstream repeat sample locations for each coliform site are also listed in Table 2 and are presented on each weekly coliform monitoring map.

The District is required to take **three repeat samples** within 24 hours for every coliform-positive routine sample. The samples must come from the following locations:

- The same tap as the original unsatisfactory routine sample.
- An active service within five active connections upstream from the original routine sample location.
- An active service within five active connections downstream from the original routine sample location.

Triggered Groundwater Monitoring Plan

In the event of a positive coliform sample, the District will need to follow actions outlined in its Triggered Ground Water Monitoring Plan, revised in September 2017. The Groundwater Rule requires the collection of triggered source samples within 24 hours when a routine sample is unsatisfactory if all or a part of the water supply comes from a groundwater source. The Groundwater Rule requires operators to collect samples from every source that was in use when the routine sample was collected. If water suppliers continuously disinfect all of their groundwater sources and perform compliance monitoring as defined by the Groundwater Rule, they do not need to collect triggered source samples.

Triggered source water monitoring, either through triggered monitoring or state directed assessment monitoring, will be required to test for the presence of *E. coli*. Source water monitoring is required when one of the system's routine distribution samples collected under the RTCR is total coliform positive. See the District's Triggered Ground Water Monitoring Plan for more information.

Coliform MCL Violations

There are two types of maximum contaminant level (MCL) violations that can occur, as defined by the Revised Total Coliform Rule. These include non-acute and acute *(E. coli)* MCL violations.

Non-Acute Maximum Contaminant Level (MCL) Violations

The presence of total coliform bacteria in a water sample generally indicates contamination from the environment, particularly from the soil. It is possible that disease-causing organisms could be present as well. If only total coliform bacteria are detected in drinking water, the source is probably environmental, and fecal contamination is not likely. However, if environmental contamination can enter the system, there may also be a way for pathogens to enter the system.

Treatment Technique Trigger Assessments are now required whenever total coliform is found in a water sample. A Level 1 assessment must be completed and delivered to DOH within **30 days** after a treatment trigger occurs. A Level 1 Assessment is required when:

- Two or more total coliform-present samples are taken in one month
- A water system fails to collect three repeat samples for every total coliform-present routine sample

E. coli (Acute) Maximum Contaminant Level (MCL) Violations

An *E. coli* (Acute) Maximum Contaminant Level (MCL) violation occurs if a routine sample and at least one related repeat sample both have coliform bacteria present and one of the samples is positive for the presence of *E. coli* or fecal coliform bacteria. If this occurs, contamination is confirmed in the water supply.

There are four ways a water system can have an *E. coli* MCL:

1. A total coliform-positive repeat sample follows an *E. coli* positive routine sample.
2. An *E coli* positive repeat sample follows a total coliform-positive routine sample.
3. The lab fails to test a total coliform-positive repeat sample for *E. coli*.
4. The water utility fails to take three repeat samples following an *E. coli* positive routine sample.

If an *E coli* MCL violation occurs, the District needs to take the following actions:

- Contact the Department of Health regional office as soon as possible to discuss public notification, follow-up requirements, and steps to take to resolve the problem.

- Public notification is required within 24 hours. Due to the public health risk, a boil-water advisory will typically be issued in response to an acute MCL violation.

If the above conditions are met, a Level 2 Assessment must be completed along with public notification of an *E. coli* MCL violation.

Level Assessments

A treatment technique trigger is a situation that requires a water system to take action. The Revised Total Coliform Rule requires water systems to conduct an assessment to find and fix any sanitary defects whenever a treatment technique trigger occurs. There are two assessment levels based on the severity and frequency of the problem. Water suppliers must complete a Level 1 or Level 2 Assessment and send it to the Department of Health within 30 days of a treatment trigger. Both levels evaluate the entire system from the sample collection site to the source of supply. ***NOTE: Water system operators should not wait for DOH notification to begin an assessment.***

Level 1 Assessment Triggers

A Level 1 Assessment can be completed by any state certified water operator when one of these treatment techniques occurs:

- Two or more total coliform-present samples are taken in one month
- The public water system fails to collect three repeat samples for every total coliform-present routine sample

Level 2 Assessment Triggers

A Level 2 Assessment is more complex and requires a person with state-required qualifications, such as a certified operator with a Water Distribution Manager 2 certification or higher, a professional engineer, or a state or local health department staff member. Triggers include:

- An *E. coli* MCL violation
- A second Level 1 treatment trigger within a rolling 12-month period

Level Assessment Templates are provided as part of this Monitoring Plan. To use electronic versions of the Level 1 and Level 2 Assessment documents, go to the Washington Department of Health Revised Total Coliform Rule page.

Other Types of Violations

In addition to non-acute and acute violations, DOH indicates that there are two other violation types:

- Major Repeat Violation – Includes failing to collect repeat samples in response to an unsatisfactory routine sample. Tier 3 public notification is required. For this type of notification, the District must communicate the violation to customers within 12 months of the violation, which could be included in the Consumer Confidence Report, also known as the Water Quality Report, if it is issued within 12 months.

- Monitoring Violation – Includes neglecting to collect any coliform sample. Tier 3 public notification is required. For this type of notification, the District must communicate the violation to customers within 12 months of the violation, which could be included in the Consumer Confidence Report (if it is issued within 12 months).

Department of Health and Public Notification

Public notification timing and distribution requirements depend on the level of threat associated with the violation or event. Public notification rules, including the following, are in Group A Public Water Supplies: Chapter 246-290 WAC (DOH 331-010). See Part 7, Reporting, Subpart A. This section includes:

- A list of violations and situations that require 24-hour notification.
- Simplified health effects language.
- Standard language for monitoring violations.

Tier 1: Acute health concerns such as *E. coli* MCL violations require public notification within 24 hours. (See Emergency Publications for Water Systems.)

Tier 2: Chronic health concerns require public notification within 30 days (such as a failure to take corrective action within 120 days of notification).

Tier 3: Reporting and monitoring violations require public notification in the annual CCR or by another method.

E. coli (Acute) Tier 1 violation

Sammamish Plateau Water will notify DOH NW Office of Drinking Water Operations as soon as being told of positive fecal coliform or *E. coli* sample. When an acute MCL is detected, the District must provide public notice as soon as possible but within 24 hours to the customers served. The District will use one or more of the following methods to deliver notice to the customers.

1. Media releases to broadcast networks (radio and television)
2. District website
3. District social media sites
4. "Boil Water" sign panels posted on District water advisory signs at all entrances to the District's service area.
5. Post multilingual notices in various locations, including city halls, libraries and shopping centers. Notices are printed in the top seven languages spoken in Sammamish and an image of a boiling water kettle. See example in Section J.
6. Work with Seattle/King County Department of Health regarding informational postings at restaurants.

A copy of this notice and certification that all public notice requirements have been met shall be sent to DOH NW Drinking Water Operations within 10 days from the day notice was issued.

Public notification is also required within 30 days when a:

- Water system fails to conduct a required Level 1 or Level 2 Assessment within 30 days of learning about the treatment technique trigger.
- Water system fails to correct a sanitary defect identified in a Level 1 or Level 2

Assessment within 30 days of learning about the treatment technique trigger.

- Seasonal system fails to complete state-approved startup procedures before providing water to customers.

Source Water *E. coli* Response

Interaction with Wholesale Suppliers

Because the District provides water to and receives water from Northeast Sammamish Sewer and Water District during typical operations due to a shared tank, the District will need to coordinate with that supply system:

- The District will be required to report a positive RTCR sample to Northeast Sewer and Water District within 24 hours of being notified of the positive sample by the water quality laboratory.
- If the District is notified by Northeast Sewer and Water District that additional source water monitoring results are *E. coli* positive, Sammamish Plateau Water must:
    - Consult with DOH and follow their recommended corrective actions.
    - Notify District customers with a Tier 1 Public Notice within 24 hours.
    - Notify District customers with a special notice in the next Consumer Confidence Report.
- The District will sample all of the supply sources that were in operation on the date the positive RTCR sample(s) was collected. The connections with these systems are through the Plateau operating zone. The District will need to conduct triggered monitoring only at operating sources serving the Plateau zone. These include the following: Well 1 (SO1), Well 2.1/2.2 (S18), Well 4 (S17), Well 7 (SO6), Well 8 (SO7), Well 9 (S13), Well 10 (S11), Well 11.1 (S14), and Well 11.2 (S12).
- If results of triggered source water monitoring are positive for the presence of *E. coli*, the District must:
    - Notify all consecutive systems served by source(s) testing positive for *E. coli* within 24 hours of the sample result.
    - Conduct source sampling as directed by the Department of Health.
    - Notify the public with a Tier 1 Public Notice within 24 hours.
    - Notify the public with a special notice in the next Consumer Confidence Report.

Wholesale Suppliers Contact Information

The District may need to contact these utilities if coliform is detected in its system. This depends on where the positive sample was collected and what connections are active at the time of the contamination incident:

Northeast Sammamish Sewer and Water District: 425-868-1144 (24 hours per day)

City of Issaquah: 425-837-3470 (normal business hours); 425-837-3200 (after business hours)

Cascade Water Alliance: (425) 493-0930

Seattle Public Utilities (206) 386-1800 (24-hour emergency number)

City of Redmond Water Operations (425) 556-2800 (24-hour emergency number)

Union Hill Water Association (425) 497-1812 (24-hour emergency number)

Ames Lake Water Association (425) 222-7003 (24-hour emergency number)

If the District receives notification of a positive coliform sample experienced by a system served by an active emergency intertie, such as the Union Hill Water Association or Ames Lake Water Association in the Cascade View zone, the District will conduct sampling of sources serving the operating zone that is connected to the emergency intertie.

In the event that triggered source water monitoring is required, such as when a positive total coliform sample result is discovered, SPW personnel shall work closely with personnel from any affected agencies to take source water samples. Source (raw water) samples will be checked for *E. coli*. If *E. coli* is present in any source sample:

1. The District will immediately notify DOH and the agencies listed above.

2. Each agency will take action as per their procedures, which should include:
   - Securing and disinfection of the affected well,
   - Increasing chlorination throughout the system.
   - Public notification for all affected agencies to their customers within 24 hours.

3. District personnel will:
   - Initiate DOH and public notification for SPW customers within 24 hours.
   - Secure all active interties and pumping from SPW sources until the contaminated well is off line, and, chlorine levels can be checked.
   - Check and monitor free chlorine levels.
     - If free chlorine at the CWA interties and source connections is above 0.2 ppm, pumping may resume.
     - If free chlorine is below 0.2 ppm, install emergency portable chlorination equipment to raise chlorine levels to 0.2 ppm or higher before pumping or intertie operation is restored.
     - Continue checking chlorine levels and utilizing treatment plant chlorination until issues with the source water have been resolved and source water is verified to be satisfactory.

Month Following Unsatisfactory Samples

Per the WAC 246-290, the District is not required to collect additional samples during a month following positive coliform sample results.

Preparation Information

The Water Superintendent is responsible for overseeing preparation, review, and updates to the District's Coliform Monitoring Plan. This Plan will be reviewed and updated every six to ten years, coinciding with Water System Plan updates, or as needed if the District adds additional sampling sites due to an increase in the population served.

RTCR Level 1 Assessment Guidance Template

331-569, March 2016 **For an electronic version, go to DOH RTCR web page**

Send your assessment to:

Eastern Region	16201 East Indiana Avenue, Suite 1500 Spokane Valley, WA 99216	Phone: 509.329.2100 Fax: 509.329.2104 Email: mark.steward@doh.wa.gov
Northwest Region	20425 72nd Ave. South, Suite 310 Kent, WA 98032-2358	Phone: 253.395.6750 Fax: 253.395.6760 Email: dw.nwro@doh.wa.gov
Southwest Region	PO Box 47823 Olympia, WA 98504-7823	Phone: 360-236-3030 Fax: 360-664-8058 Email: swro.coli@doh.wa.gov

Water System Name: Sammamish Plateau Water & Sewer District	County: King	Water System ID #: 409000
Operator in Responsible Charge (ORC): John Anderson	ORC Phone: 425-392-6256	Water System Mailing Address: 1510 228th Avenue SE Sammamish, WA 98045
ORC Address, City, State: 1510 228th Avenue SE, Sammamish, WA 98075		
Assessor Name:		
Assessor Address, City, State, Zip:		
Date(s) Assessment Completed:		

Your water system exceeded a treatment technique trigger for the Revised Total Coliform Rule. Assess the water system's condition and operation using this *Level 1 Assessment Template* as a guide.

Part A: Respond to each item below. Identify corrective actions taken to address the issue(s) found.
Part B: Summarize your findings and include an action plan with timetable for corrective actions not yet taken.

For parts A and B, include additional information (photos or other documentation) as needed to depict assessment findings and corrective actions that have been completed. All assessment elements listed in this template must be addressed in your assessment. Systems with multiple facilities such as wells or storage tanks may need to provide additional pages.

Within 30 days of learning of the treatment technique trigger, submit completed assessment documentation to your regional office and keep a copy in your water system files.

Part A: Assessment		**Corrective action needed?**	**Corrective action(s) taken & date taken**
1. Site and Sampling Protocol 1a. Do you have a written **coliform monitoring plan** & **sampling procedure** that ensures samples are representative of the distribution system?	☐ Yes ☐ No	☐ Yes ☐ No	

Part A: Assessment		Corrective action needed?	Corrective action(s) taken & date taken
1b. Have there been any changes in sampling conditions or procedures that may have contributed to the treatment technique trigger? Describe:	☐ Yes ☐ No	☐ Yes ☐ No	
1c. Inspect the sampling sites: - Are the sampling locations free of potential sources of contamination? - Are the sampling taps in good condition? - Other: (describe) _____	☐ Yes ☐ No ☐ N/A ☐ Yes ☐ No ☐ N/A ☐ Yes ☐ No ☐ N/A	☐ Yes ☐ No ☐ Yes ☐ No ☐ Yes ☐ No	
2. Distribution 2a. Do you have procedures in place to ensure proper maintenance of the distribution system, including: - Appropriate pipe replacement and repair procedures - Replacement and repair of other distribution system components - Regular flushing program - Routine vault inspections - Fully implemented **cross connection control** program - Maintain positive pressure in all parts of the distribution system	☐ Yes ☐ No ☐ Yes ☐ No ☐ Yes ☐ No ☐ N/A ☐ Yes ☐ No ☐ N/A ☐ Yes ☐ No ☐ Yes ☐ No	☐ Yes ☐ No ☐ Yes ☐ No ☐ Yes ☐ No ☐ Yes ☐ No ☐ Yes ☐ No ☐ Yes ☐ No	
2b. Has there been any recently reported low pressure (<20 PSI) or **complete loss of pressure** in the distribution system?	☐ Yes ☐ No	☐ Yes ☐ No	
2c. Have there been any changes in distribution conditions or operations that may have contributed to the treatment technique trigger? Describe:	☐ Yes ☐ No	☐ Yes ☐ No	
2d. Inspect the distribution system: - Are there any visible line breaks or leaks? - Are there any observed unprotected cross connections? - Is there any evidence of **vandalism or other security breaches**? - Other: (describe) _____	☐ Yes ☐ No ☐ Yes ☐ No ☐ Yes ☐ No ☐ Yes ☐ No ☐ N/A	☐ Yes ☐ No ☐ Yes ☐ No ☐ Yes ☐ No ☐ Yes ☐ No	
3. Storage Facilities 3a. Does your water system have a water storage tank? *If no, skip to Section 4.*	☐ Yes ☐ No		
3b. Do you have procedures in place for periodic inspection and maintenance of the exterior and interior of each storage facility?	☐ Yes ☐ No	☐ Yes ☐ No	

Part A: Assessment		Corrective action needed?	Corrective action(s) taken & date taken
3c. Have there been any changes in storage conditions or operations that may have contributed to the treatment technique trigger? Describe:	☐ Yes ☐ No	☐ Yes ☐ No	
3d. Inspect the storage facilities: - Does the tank have any cracks or other openings? - Is the reservoir roof free of any unprotected openings? - Is the access hatch constructed and sealed to keep contaminants out? - If there is an **air vent on the storage tank**, is it constructed to prevent the entry of contaminants? - Is the overflow line constructed to prevent contaminants from entering the tank? - If the overflow line discharges into a storm drain, to surface water, or directly into a sanitary sewer, is it protected by a proper air gap? - Is there any evidence of vandalism or other security breaches? - Other: (describe) _____	☐ Yes ☐ No ☐ Yes ☐ No ☐ Yes ☐ No ☐ Yes ☐ No ☐ N/A ☐ Yes ☐ No ☐ Yes ☐ No ☐ N/A ☐ Yes ☐ No ☐ Yes ☐ No ☐ N/A	☐ Yes ☐ No ☐ Yes ☐ No ☐ Yes ☐ No ☐ Yes ☐ No ☐ Yes ☐ No ☐ Yes ☐ No ☐ Yes ☐ No ☐ Yes ☐ No	
4. Source--Groundwater 4a. Does your water system have a well or spring? If no, skip to Section 6.	☐ Yes ☐ No		
4b. Do you comply with **Sanitary Control Area** requirements (WAC 246-290-135(2)?	☐ Yes ☐ No	☐ Yes ☐ No	
4c. Have there been any changes in source conditions or operations that may have contributed to the treatment technique trigger? Describe:	☐ Yes ☐ No	☐ Yes ☐ No	
4d. Inspect the source facilities: - Is the sanitary control area free of all potential sources of contamination? - Is the wellhead or spring box above grade with no potential for flooding? - Is the **pressure tank** waterlogged? - Is the **well cap** sealed and watertight, and the well casing free of unprotected openings? - (For springs) Is the spring box (structure, hatch, and overflow) free of any unprotected openings? - Other: (describe) _____	☐ Yes ☐ No ☐ Yes ☐ No ☐ Yes ☐ No ☐ N/A ☐ Yes ☐ No ☐ N/A ☐ Yes ☐ No ☐ N/A ☐ Yes ☐ No ☐ N/A	☐ Yes ☐ No ☐ Yes ☐ No ☐ Yes ☐ No ☐ Yes ☐ No ☐ Yes ☐ No ☐ Yes ☐ No	

Part A: Assessment		Corrective action needed?	Corrective action(s) taken & date taken
5. Treatment--Groundwater 5a. Is any source **continuously treated with a disinfectant**? If no, skip to Section 6.	☐ Yes ☐ No		
5b. Do you have procedures in place for proper operation and maintenance of disinfection treatment facilities?	☐ Yes ☐ No	☐ Yes ☐ No	
5c. Have there been any changes in treatment equipment or process that may have contributed to the treatment technique trigger? Describe:	☐ Yes ☐ No	☐ Yes ☐ No	
5d. Inspect the treatment facilities: - Is the treatment system operating properly? - Is there any evidence of vandalism or other security breaches? - Other: (describe) _____	 ☐ Yes ☐ No ☐ N/A ☐ Yes ☐ No ☐ N/A ☐ Yes ☐ No ☐ N/A	 ☐ Yes ☐ No ☐ Yes ☐ No ☐ Yes ☐ No	
6. Source—Surface Water Supply (watershed) 6a. Does your water system have a surface water supply? If no, skip to Section 8.	☐ Yes ☐ No		
6b. Do you comply with Watershed Control Program requirements (WAC 246-290-135(4)?	☐ Yes ☐ No	☐ Yes ☐ No	
6c. Have there been any changes within the watershed or in raw water conditions that may have contributed to the treatment technique trigger? Describe:	☐ Yes ☐ No	☐ Yes ☐ No	
6d. Inspect the surface water intake/headworks: - Is there evidence of problems at the intake? - Is there evidence of vandalism or other security breaches at the intake? - Other: (describe) _____	 ☐ Yes ☐ No ☐ Yes ☐ No ☐ Yes ☐ No ☐ N/A	 ☐ Yes ☐ No ☐ Yes ☐ No ☐ Yes ☐ No	
7. Treatment—Surface Water 7a. Do you have procedures in place for proper operation and maintenance of surface water treatment facilities?	☐ Yes ☐ No	☐ Yes ☐ No	
7b. Have there been any changes in treatment equipment or process that may have contributed to the treatment technique trigger? Describe:	☐ Yes ☐ No	☐ Yes ☐ No	

Part A: Assessment		Corrective action needed?	Corrective action(s) taken & date taken
7c. Inspect the treatment facilities: - Is the treatment system operating properly? - Is there any evidence of vandalism or other security breaches? - Other: (describe) _____	☐ Yes ☐ No ☐ N/A ☐ Yes ☐ No ☐ N/A ☐ Yes ☐ No ☐ N/A	☐ Yes ☐ No ☐ Yes ☐ No ☐ Yes ☐ No	
8. Other assessment activities (describe):			

Part B. Assessment Summary and Action Plan with Timetable for corrective actions not yet taken

☐ ASSESSOR: CHECK HERE if you did not identify any issues that may have directly or indirectly caused or contributed to entry of coliform bacteria into the system.

Corrective Actions Completed: ASSESSOR: Summarize the issues found and the corrective actions that have been completed and date completed

Describe issue found	Describe corrective action taken and date completed

Corrective Actions Not Completed: ASSESSOR: Describe the issues for which corrective actions have not yet been completed. **Provide an action plan with timetable for completion.**

Describe issue found	Describe planned corrective action and timetable for completion.

Print Name of Assessor: _____ Signature of Assessor: _____ Date: _____

OFFICE OF DRINKING WATER USE ONLY

Regional Office Reviewer: _____ Date of Review: _____

Assessment sufficient? ☐ Yes ☐ No Likely cause determined? ☐ Yes ☐ No Sanitary defect(s) identified? ☐ Yes ☐ No

Corrective actions completed? ☐ Yes ☐ No Corrective action plan included? ☐ Yes ☐ No Corrective action plan approved? ☐ Yes ☐ No

Comments:

RTCR Level 2 Assessment Guidance Template

331-570, March 2016 For an electronic version go to DOH RTCR web page

Send your assessment to:

Eastern Region	16201 East Indiana Avenue, Suite 1500 Spokane Valley, WA 99216	Phone: 509.329.2100 Fax: 509.329.2104 Email: mark.steward@doh.wa.gov
Northwest Region	20425 72nd Ave. South, Suite 310 Kent, WA 98032-2358	Phone: 253.395.6750 Fax: 253.395.6760 Email: dw.nwro@doh.wa.gov
Southwest Region	PO Box 47823 Olympia, WA 98504-7823	Phone: 360-236-3030 Fax: 360-664-8058 Email: swro.coli@doh.wa.gov

Water System Name: Sammamish Plateau Water and Sewer District County: King	Water System ID #: 409009
Operator in Responsible Charge (ORC): John Anderson ORC Phone: (425) 392-6256	Water System Mailing Address: 1510 228th Avenue SE Sammamish, WA 98075
ORC Address, City, State: 1510 228th Avenue SE, Sammamish, WA 98075	
Assessor Name: Assessor is: ☐WDM-2, 3, or 4 ☐ Engineer ☐	
Assessor Address, City, State, Zip:	
Date(s) Assessment Completed:	

Your water system exceeded a treatment technique trigger for the Revised Total Coliform Rule. Assess the water system's condition and operation using this *Level 2 Assessment Template* as a guide.

Part A: Respond to each item below. Identify corrective actions taken to address the issue(s) found.
Part B: Summarize your findings and include an action plan with timetable for corrective actions not yet taken.

For parts A and B, include additional information (photos or other documentation) as needed to depict assessment findings and corrective actions that have been completed. All assessment elements listed in this template must be addressed in your assessment. Systems with multiple facilities such as wells or storage tanks may need to provide additional pages.

Within 30 days of learning of the treatment technique trigger, submit completed assessment documentation to your regional office and keep a copy in your water system files.

Part A: Assessment		**Corrective action needed?**	**Corrective action(s) taken & date taken**
1. Site and Sampling Protocol 1a. Do you have a written **coliform monitoring plan** & **sampling procedure** that ensures samples are representative of the distribution system?	☐ Yes ☐ No	☐ Yes ☐ No	
1b. Do you have a program in place that ensures that all sample collectors are trained before being allowed to collect compliance samples?	☐ Yes ☐ No	☐ Yes ☐ No	

Part A: Assessment		Corrective action needed?	Corrective action(s) taken & date taken
1c. Do you regularly monitor the condition of each routine and repeat sample site to ensure that no site will contaminate the sample?	☐ Yes ☐ No	☐ Yes ☐ No	
1d. Was the sample collected by a trained, qualified person?	☐ Yes ☐ No	☐ Yes ☐ No	
1e. Did the sampler follow your monitoring plan and sampling procedure?	☐ Yes ☐ No	☐ Yes ☐ No	
1f. Was the sample collected representative of the water in the distribution system?	☐ Yes ☐ No	☐ Yes ☐ No	
1g. Have there been any changes in sampling conditions or procedures that may have contributed to the treatment technique trigger? Describe:	☐ Yes ☐ No	☐ Yes ☐ No	
1h. Inspect the sampling sites: - Are the sampling locations free of potential sources of contamination? - Are the sampling taps in good condition? - Other: (describe) _____	 ☐ Yes ☐ No ☐ Yes ☐ No ☐ Yes ☐ No	 ☐ Yes ☐ No ☐ Yes ☐ No ☐ Yes ☐ No	
2. Distribution 2a. Do you have procedures in place to ensure proper maintenance of the distribution system, including: - Appropriate pipe replacement and repair procedures - Replacement and repair of other distribution system components - Regular flushing program - Routine vault inspections - Fully implemented **cross connection control** program - Maintain positive pressure in all parts of the distribution system	 ☐ Yes ☐ No ☐ Yes ☐ No ☐ Yes ☐ No ☐ N/A ☐ Yes ☐ No ☐ N/A ☐ Yes ☐ No ☐ Yes ☐ No	 ☐ Yes ☐ No ☐ Yes ☐ No ☐ Yes ☐ No ☐ Yes ☐ No ☐ Yes ☐ No ☐ Yes ☐ No	
2b. Following work done on the water system and following any pressure loss event, do you collect investigative coliform samples?	☐ Yes ☐ No	☐ Yes ☐ No	
2b. Has there been any recently reported low pressure (<20 PSI) or **complete loss of pressure** in the distribution system?	☐ Yes ☐ No	☐ Yes ☐ No	
2c. Have there been any recent repairs or new construction in the distribution system?	☐ Yes ☐ No	☐ Yes ☐ No	
2d. Are there any known pipe leaks that have not yet been repaired?	☐ Yes ☐ No	☐ Yes ☐ No	

Part A: Assessment		Corrective action needed?	Corrective action(s) taken & date taken
2e. Has there been any recent use of fire hydrants such as hydrant maintenance or utility/FD flushing?	☐ Yes ☐ No ☐ N/A	☐ Yes ☐ No	
2f. If there are there any air-vacuum relief valve vaults in the distribution system, are any flooded?	☐ Yes ☐ No ☐ N/A	☐ Yes ☐ No	
2g. Has there been any recent report of a cross connection incident?	☐ Yes ☐ No	☐ Yes ☐ No	
2h. Have there been any off-normal events, such as discolored water, odd taste, or smell?	☐ Yes ☐ No	☐ Yes ☐ No	
2i. Have there been any other changes in distribution conditions or operations that may have contributed to the treatment technique trigger? Describe:	☐ Yes ☐ No	☐ Yes ☐ No	
2j. Inspect the distribution system: - Are there any visible line breaks or leaks? - Are there any observed unprotected cross connections? - Is there any evidence of **vandalism or other security breaches**? - Other: (describe) _____	 ☐ Yes ☐ No ☐ Yes ☐ No ☐ Yes ☐ No ☐ Yes ☐ No	 ☐ Yes ☐ No ☐ Yes ☐ No ☐ Yes ☐ No ☐ Yes ☐ No	
3. Storage Facilities 3a. Does your water system have a water storage tank? If no, skip to Section 4.	☐ Yes ☐ No		
3b. Do you have procedures in place for periodic inspection and cleaning of the interior of each storage facility including vent, roof hatch, and overflow?	☐ Yes ☐ No	☐ Yes ☐ No	
3c.Has there been any recent work done on a storage facility?	☐ Yes ☐ No	☐ Yes ☐ No	
3d. Are all storage facilities secured from unauthorized entry and vandalism?	☐ Yes ☐ No	☐ Yes ☐ No	
3e. Have there been any other changes in storage conditions or operations that may have contributed to the treatment technique trigger? Describe:	☐ Yes ☐ No	☐ Yes ☐ No	

Part A: Assessment		Corrective action needed?	Corrective action(s) taken & date taken
3f. Inspect the storage facilities: - Does the tank have any cracks or other openings? - Is the reservoir roof free of any unprotected openings? - Is the access hatch constructed and sealed to keep contaminants out? - If there is an **air vent on the storage tank**, is it constructed to prevent the entry of contaminants? - Is the overflow line constructed to prevent contaminants from entering the tank? - If the overflow line discharges into a storm drain, to surface water, or directly into a sanitary sewer, is it protected by a proper air gap? - Is there any evidence of vandalism or other security breaches? - Other: (describe) _____	 ☐ Yes ☐ No ☐ Yes ☐ No ☐ Yes ☐ No ☐ Yes ☐ No ☐ N/A ☐ Yes ☐ No ☐ Yes ☐ No ☐ N/A ☐ Yes ☐ No ☐ Yes ☐ No ☐ N/A	 ☐ Yes ☐ No ☐ Yes ☐ No ☐ Yes ☐ No ☐ Yes ☐ No ☐ Yes ☐ No ☐ Yes ☐ No ☐ Yes ☐ No ☐ Yes ☐ No	
4. Source--Groundwater 4a. Does your water system have a well or spring? If no, skip to Section 6.	☐ Yes ☐ No		
4b. Do you comply with **Sanitary Control Area** requirements (WAC 246-290-135(2)?	☐ Yes ☐ No	☐ Yes ☐ No	
4c. Are all sources protected from fecal contamination by appropriate placement and construction?	☐ Yes ☐ No	☐ Yes ☐ No	
4d. Have any unapproved sources recently been used?	☐ Yes ☐ No	☐ Yes ☐ No	
4e. Have there been any recent land use changes observed within a source sanitary control area, such as construction, farming, or dumping in the last month?	☐ Yes ☐ No	☐ Yes ☐ No	
4f. Has there been any standing water, heavy precipitation, or flooding around a source in the last month?	☐ Yes ☐ No	☐ Yes ☐ No	
4g. Has there been any recent work done on a well or spring box?	☐ Yes ☐ No	☐ Yes ☐ No	
4h. Has there been any recent failure of a source pump?	☐ Yes ☐ No	☐ Yes ☐ No	
4i. Has there been any recent maintenance performed on a source pump or other source component?	☐ Yes ☐ No	☐ Yes ☐ No	
4j. Are the source facilities secured from unauthorized entry and vandalism?	☐ Yes ☐ No	☐ Yes ☐ No	
4k. Have there been any other changes in source conditions or operations that may have contributed to the treatment technique trigger? Describe:	☐ Yes ☐ No	☐ Yes ☐ No	

Part A: Assessment		Corrective action needed?	Corrective action(s) taken & date taken
4l. Inspect the source facilities: - Is the sanitary control area free of all potential sources of contamination? - Is the wellhead or spring box above grade with no potential for flooding? - Is the **pressure tank** water logged? - Is the **well cap** sealed and watertight, and the well casing free of unprotected openings? - (For springs) Is the spring box (structure, hatch, and overflow) free of any unprotected openings? - Is there any evidence of vandalism or other security breaches? - Other: (describe) _____	 ☐ Yes ☐ No ☐ Yes ☐ No ☐ Yes ☐ No ☐ N/A ☐ Yes ☐ No ☐ N/A ☐ Yes ☐ No ☐ N/A ☐ Yes ☐ No ☐ N/A ☐ Yes ☐ No ☐ N/A	 ☐ Yes ☐ No ☐ Yes ☐ No ☐ Yes ☐ No ☐ Yes ☐ No ☐ Yes ☐ No ☐ Yes ☐ No	
5. Treatment--Groundwater 5a. Is any source **continuously treated with a disinfectant**? If no, skip to Section 6.	☐ Yes ☐ No		
5b. Do you have procedures in place for proper operation and maintenance of disinfection treatment facilities?	☐ Yes ☐ No	☐ Yes ☐ No	
5c. If a disinfection residual should be continuously maintained throughout the distribution system, was the measured free chlorine residual at the time of coliform sample collection below 0.2 mg/L?	☐ Yes ☐ No	☐ Yes ☐ No	
5d. Have there been any recent interruptions in any treatment process?	☐ Yes ☐ No	☐ Yes ☐ No	
5e. Has there been any recent maintenance performed on any treatment component?	☐ Yes ☐ No	☐ Yes ☐ No	
5f. Have there been any other changes in treatment equipment or process that may have contributed to the treatment technique trigger? Describe:	☐ Yes ☐ No	☐ Yes ☐ No	
5g. Inspect the treatment facilities: - Is the treatment system operating properly? - Is there any evidence of vandalism or other security breaches? - Other: (describe) _____	 ☐ Yes ☐ No ☐ Yes ☐ No ☐ Yes ☐ No ☐ N/A	 ☐ Yes ☐ No ☐ Yes ☐ No ☐ Yes ☐ No	
6. Source—Surface Water Supply (watershed) 6a. Does your water system have a surface water supply? If no, skip to Section 8.	☐ Yes ☐ No		
6b. Do you comply with Watershed Control Program requirements (WAC 246-290-135(4)?	☐ Yes ☐ No	☐ Yes ☐ No	

Part A: Assessment		Corrective action needed?	Corrective action(s) taken & date taken
6c. Has there been any recent spikes in raw water turbidity?	☐ Yes ☐ No	☐ Yes ☐ No	
6d. Have there been any land use changes within the watershed, such as logging, construction, or different farming practices in the past month?	☐ Yes ☐ No	☐ Yes ☐ No	
6e. Have there been any other changes within the watershed or in raw water conditions that may have contributed to the treatment technique trigger? Describe:	☐ Yes ☐ No	☐ Yes ☐ No	
6f. Inspect the surface water intake/headworks: - Is there evidence of problems at the intake? - Is there evidence of vandalism or other security breaches at the intake? - Other: (describe) _____	☐ Yes ☐ No ☐ Yes ☐ No ☐ Yes ☐ No ☐ N/A	☐ Yes ☐ No ☐ Yes ☐ No ☐ Yes ☐ No	
7. Treatment—Surface Water 7a. Do you have procedures in place for proper operation and maintenance of surface water treatment facilities?	☐ Yes ☐ No	☐ Yes ☐ No	
7b. Have there been any recent interruptions in any part of the filtration or disinfection treatment process?	☐ Yes ☐ No	☐ Yes ☐ No	
7c. Are filtration and disinfection treatment facilities properly operated and maintained?	☐ Yes ☐ No	☐ Yes ☐ No	
7d. Has there been any maintenance performed on any treatment component in the past month?	☐ Yes ☐ No	☐ Yes ☐ No	
7e. Have there been any problems with a treatment process in the past month, such as high finished water turbidity, disinfection inactivation ratio <1, or changes in coagulation practices or filtration rate?	☐ Yes ☐ No	☐ Yes ☐ No	
7f. Have there been any other changes in treatment equipment or process that may have contributed to the treatment technique trigger? Describe:	☐ Yes ☐ No	☐ Yes ☐ No	

Part A: Assessment		Corrective action needed?	Corrective action(s) taken & date taken
7g. Inspect the treatment facilities: - Is the treatment system operating properly? - Is there any evidence of vandalism or other security breaches? - Other: (describe) _____	☐ Yes ☐ No ☐ Yes ☐ No ☐ Yes ☐ No ☐ N/A	☐ Yes ☐ No ☐ Yes ☐ No ☐ Yes ☐ No	
8. Other assessment activities (describe):			

Part B. Assessment Summary and Action Plan with Timetable for corrective actions not yet taken

☐ ASSESSOR: CHECK HERE if you did not identify any issues that may have directly or indirectly caused or contributed to entry of coliform bacteria into the system.

Corrective Actions <u>Completed</u>: ASSESSOR: Summarize the issues found and the corrective actions that have been completed and date completed.

A.

Describe issue found	Describe corrective action taken and date completed

Corrective Actions Not Completed: ASSESSOR: Describe the issues for which corrective actions have not yet been completed. **Provide an action plan with timetable for completion.**

Describe issue found	Describe planned corrective action and timetable for completion.

Print Name of Assessor: _____ Signature of Assessor: _____ Date: _____

OFFICE OF DRINKING WATER USE ONLY

Regional Office Reviewer: _____ Date of Review: _____

Assessment sufficient? ☐ Yes ☐ No Likely cause determined? ☐ Yes ☐ No Sanitary defect(s) identified? ☐ Yes ☐ No

Corrective actions completed? ☐ Yes ☐ No Corrective action plan included? ☐ Yes ☐ No Corrective action plan approved? ☐ Yes ☐ No

Comments:

Coliform Monitoring Plan for Sammamish Plateau Water and Sewer District

A. System Information

Water System Name Sammamish Plateau Water	**County** King	**System I.D. Number** 409009
Name of Plan Preparer John Anderson	**Position** Water Superintendent	**Daytime Phone** **425-392-6256**
Sources: DOH Source Number, Source Name, Well Depth, and Pumping Capacity (Note: only active sources are listed.)	S01, Well 1R, 128 feet, 500 gpm S06, Well 7, 83 feet, 2000 gpm S07, Well 8, 105 feet, 3200 gpm S11, Well 10, 135 feet, 500 gpm S12, Well 11.2, 785 feet, 1450/1600 gpm S13, Well 9, 222 feet, 2200 gpm S14, Well 11.1, 409 feet, 389 gpm S16, Well 12R, 138 feet, 200 gpm S17, Well 4R, 657 feet, 1450/1800 gpm S18, Well 2.1, 96 feet, 300 gpm S18, Well 2.2, 96 feet, 500 gpm S19, Cascade Water Alliance Interties (North and South) S20, NE Sammamish Intertie S21, Issaquah Intertie S22, Union Hill Intertie, Cascade View Zone S23, Ames Lake Intertie, Cascade View Zone S24, Well 13R, 795 feet, 260 gpm	

Storage: List and Describe	3 Million Gallon (MG) Tank, Plateau 700 Zone Section 36 East Tank, 4 MG, Plateau 550 Zone Section 36 West Tank, 4 MG, Plateau 550 Zone 2 MG Tank, Plateau 650 Zone 7 MG Tank, Plateau 650 Zone 297 Tank, 2.25 MG, Plateau 297 Zone Well 12 Tank, 600,000 gallons, Cascade View 730 Zone Well 13 Tank, 275,000 gallons, Cascade View 730 Zone
Treatment: Source Number & Process	S01: Well 1R, Sodium hydroxide, chlorination, fluoridation S02, S15, S18: Well 2.1 and 2.2, sodium hydroxide, chlorination, fluoridation, manganese filtration. S17, S14, and S12: Wells 4R, 11.1 and 11.2, manganese filtration, chlorination, fluoridation (to 650 zone only), ferric chloride for coagulation. S06, S07, S13: Wells 7, 8 and 9, sodium hydroxide, chlorination, fluoridation Section 36 tanks: chlorination and fluoridation S16: Well 12R, manganese filtration, chlorination, fluoridation. S24: Well 13R, manganese filtration, chlorination, fluoridation.
Pressure Zones: Number and name	Plateau Pressure Zones: 297, 310, 375, 390, 400 BROD, 400 WAV, 450, 450WAK, 466, 475, 475PH, 475 SAMSUN, 499, 510, 540, 550, 550 ALD, 566, 590, 650, 700, 700 SH, 700 BC. Cascade View Pressure Zones: 550 CV, 590 CV, 642, 650 CV, 730
Population by Pressure Zone	Plateau Zone: 61,105 Cascade View Zone: 2,043 Total Population Served: 63,148 (as of 12/31/2017)

Number of Routine Samples Required Monthly by Regulation:	70
Number of Sample Sites Needed to Represent the Distribution System:	70
***Request DOH Approval of Triggered Source Monitoring Plan?**	**Yes** ☒ **No** ☐

*If approval is requested a fee will be charged for the review.

B. Laboratory Information

Laboratory Name Seattle Public Utilities Water Quality Lab	**Office Phone: 206-684-7834** **After Hours Phone: 206-684-7407** Microbiology Lab
Address 800 South Stacy Street, Seattle, WA 98134	**Cell Phone - -** **Email**
Hours of Operation 8 am – 5 pm Monday – Friday	
Contact Name Winsome Robinson-Williams, Microbiology Supervisor, 206-615-1353 Wylie Harper, Division Director, 206-684-7880	
Emergency Laboratory Name Water Management Laboratories, Inc.	**Office Phone 253-531-3121** **After Hours Phone 253-841-0732**
Address 1515 80th Street E., Tacoma, WA 98404	**Emergency Cell Phone 1: 253-312-1651** **Emergency Cell Phone 2: 253-691-6691** **Email**
Hours of Operation 8 am – 5 pm Monday - Friday	
Contact Name Christa Garrettson	
Emergency Laboratory Name AmTest Laboratories	**Office Phone (also after hours number): 425-885-1664**
Address 13600 NE 126th Place #C, Kirkland, WA 98034	**Emergency Cell Phone:** **Email** customerservice@amtestlab.com
Hours of Operation 7 am – 5 pm	
Contact Name Aaron Young, Lab/Project Manager, aarony@amtestlab.com	

C. Wholesaling of Groundwater

	Yes	No
We are a consecutive system and receive groundwater from another water system through a shared joint tank:	☒	☐
If yes, Water System Name: NE Sammamish Sewer and Water District Contact Name: Laura Keough Telephone Numbers Office **425-868-1144** After Hours **425-868-1144**		
We provide groundwater to another public water systems through a shared joint tank:	☒	☐
If yes, Water System Name: NE Sammamish Sewer and Water District Contact Name: Laura Keough Telephone Numbers Office **425-868-1144** After Hours **425-868-1144**		
If yes, Water System Name: Contact Name: Telephone Numbers Office - - After Hours - -		
If yes, Water System Name: Contact Name: Telephone Numbers Office - - After Hours - -		
If yes, Water System Name: Contact Name: Telephone Numbers Office - - After Hours - -		
Contact Name: Telephone Numbers Office - - After Hours - -		

D. Routine, Repeat, and Triggered Source Sample Locations

Table 2: Routine, Repeat and Triggered Source Sample Locations and Weekly Rotation Schedule						
	Week	ID No.	Routine Sample Site Location	Upstream Repeat Site	Downstream Repeat Site	Groundwater Sources for Triggered Sample Sites
	1	3	25920 NE 29th Pl	25906 NE 29th Pl	25936 NE 29th Pl	Well 12 (S16), Well 13 (S24), CWA North Intertie (S19)
	1	6	1639 209th Pl NE	1651 209th Pl NE	1633 209th Pl NE	Well 1 (SO1), Well 2.1/2.2 (S18), Well 4 (S17), Well 7 (S06), Well 8 (S07), Well 9 (S13), Well 10 (S11), Well 11.1 (S14), Well 11.2 (S12), CWA South Intertie (S19)
	1	7	22202 NE 12th Pl	1139 NE 22nd Pl	22212 NE 12th Pl	Well 1 (SO1), Well 2.1/2.2 (S18), Well 4 (S17), Well 7 (S06), Well 8 (S07), Well 9 (S13), Well 10 (S11), Well 11.1 (S14), Well 11.2 (S12), CWA South Intertie (S19)
	1	11	407 238th Ave NE	421 238th Ave NE	408 238th Ave NE	Well 1 (SO1), Well 2.1/2.2 (S18), Well 4 (S17), Well 7 (S06), Well 8 (S07), Well 9 (S13), Well 10 (S11), Well 11.1 (S14), Well 11.2 (S12), CWA South Intertie (S19)
	1	21	19605 SE 23rd St	19615 SE 23rd St	19543 SE 23rd St	Well 1 (SO1), Well 2.1/2.2 (S18), Well 4 (S17), Well 7 (S06), Well 8 (S07), Well 9 (S13), Well 10 (S11), Well 11.1 (S14), Well 11.2 (S12), CWA South Intertie (S19)
	1	25	25005 SE 24th St	24640 SE 24th St	2322 SE 24th St	Well 1 (SO1), Well 2.1/2.2 (S18), Well 4 (S17), Well 7 (S06), Well 8 (S07), Well 9 (S13), Well 10 (S11), Well 11.1 (S14), Well 11.2 (S12), CWA South Intertie (S19)
	1	29	2214 275th Ct SE	2206 275th Ct SE	2228 275th Ct SE	Well 1 (SO1), Well 2.1/2.2 (S18), Well 4 (S17), Well 7 (S06), Well 8 (S07), Well 9 (S13), Well 10 (S11), Well 11.1 (S14), Well 11.2 (S12), CWA South Intertie (S19)
	1	34	4210 244th Pl SE	4187 244th Pl SE	4430 SE 42nd Pl	Well 1 (SO1), Well 2.1/2.2 (S18), Well 4 (S17), Well 7 (S06), Well 8 (S07), Well 9 (S13), Well 10 (S11), Well 11.1 (S14), Well 11.2 (S12), CWA South Intertie (S19)

Table 2: Routine, Repeat and Triggered Source Sample Locations and Weekly Rotation Schedule					
Week	ID No.	Routine Sample Site Location	Upstream Repeat Site	Downstream Repeat Site	Groundwater Sources for Triggered Sample Sites
1	37	4708 227th Pl SE	4714 227th Pl SE	4702 227th Pl SE	Well 1 (SO1), Well 2.1/2.2 (S18), Well 4 (S17), Well 7 (S06), Well 8 (S07), Well 9 (S13), Well 10 (S11), Well 11.1 (S14), Well 11.2 (S12), CWA South Intertie (S19)
1	38	5408 248th Pl SE	5420 247th Pl SE	5510 248th Pl SE	Well 1 (SO1), Well 2.1/2.2 (S18), Well 4 (S17), Well 7 (S06), Well 8 (S07), Well 9 (S13), Well 10 (S11), Well 11.1 (S14), Well 11.2 (S12), CWA South Intertie (S19)
1	39	22664 SE 56th Ave	5218 229TH Ave SE	22621 SE 56th St	Well 1 (SO1), Well 2.1/2.2 (S18), Well 4 (S17), Well 7 (S06), Well 8 (S07), Well 9 (S13), Well 10 (S11), Well 11.1 (S14), Well 11.2 (S12), CWA South Intertie (S19)
1	44	214th Ave SE & SE 5th Pl	530 214th Ave SE	21410 SE 5th Pl	Well 1 (SO1), Well 2.1/2.2 (S18), Well 4 (S17), Well 7 (S06), Well 8 (S07), Well 9 (S13), Well 10 (S11), Well 11.1 (S14), Well 11.2 (S12), CWA South Intertie (S19)
1	54	1434 241st Pl SE	1428 242nd Ave SE	1610 242nd Ave SE	Well 1 (SO1), Well 2.1/2.2 (S18), Well 4 (S17), Well 7 (S06), Well 8 (S07), Well 9 (S13), Well 10 (S11), Well 11.1 (S14), Well 11.2 (S12), CWA South Intertie (S19)
1	56	2637 231st Pl SE	2640 231st Pl SE	2631 231st Pl SE	Well 1 (SO1), Well 2.1/2.2 (S18), Well 4 (S17), Well 7 (S06), Well 8 (S07), Well 9 (S13), Well 10 (S11), Well 11.1 (S14), Well 11.2 (S12), CWA South Intertie (S19)
1	65	4014 251st Pl SE	4002 252nd Ave SE	4019 251st Pl SE	Well 1 (SO1), Well 2.1/2.2 (S18), Well 4 (S17), Well 7 (S06), Well 8 (S07), Well 9 (S13), Well 10 (S11), Well 11.1 (S14), Well 11.2 (S12), CWA South Intertie (S19)
1	66	3416 221st Ave SE	3400 221st Ave SE	3424 221st Ave SE	Well 1 (SO1), Well 2.1/2.2 (S18), Well 4 (S17), Well 7 (S06), Well 8 (S07), Well 9 (S13), Well 10 (S11), Well 11.1 (S14), Well 11.2 (S12), CWA South Intertie (S19)

Table 2: Routine, Repeat and Triggered Source Sample Locations and Weekly Rotation Schedule						
Week		ID No.	Routine Sample Site Location	Upstream Repeat Site	Downstream Repeat Site	Groundwater Sources for Triggered Sample Sites
	1	77	609 216th Ave NE	418 216th Ave NE	632 216th Ave NE	Well 1 (SO1), Well 2.1/2.2 (S18), Well 4 (S17), Well 7 (S06), Well 8 (S07), Well 9 (S13), Well 10 (S11), Well 11.1 (S14), Well 11.2 (S12), CWA South Intertie (S19)
	2	2	5524 264th Ave NE	5612 264th Ave NE	5510 264th Ave NE	Well 12 (S16), Well 13 (S24), CWA North Intertie (S19)
	2	4	24010 NE 30th Pl	24042 NE 30th Pl	24002 NE 30th Pl	Well 1 (SO1), Well 2.1/2.2 (S18), Well 4 (S17), Well 7 (S06), Well 8 (S07), Well 9 (S13), Well 10 (S11), Well 11.1 (S14), Well 11.2 (S12), CWA South Intertie (S19)
	2	8	1806 229th Ave NE	1812 229th Ave NE	1736 228th Ave NE	Well 1 (SO1), Well 2.1/2.2 (S18), Well 4 (S17), Well 7 (S06), Well 8 (S07), Well 9 (S13), Well 10 (S11), Well 11.1 (S14), Well 11.2 (S12), CWA South Intertie (S19)
	2	12	410 228th Ave NE	410 228th Ave NE	706 228th Ave NE	Well 1 (SO1), Well 2.1/2.2 (S18), Well 4 (S17), Well 7 (S06), Well 8 (S07), Well 9 (S13), Well 10 (S11), Well 11.1 (S14), Well 11.2 (S12), CWA South Intertie (S19)
	2	14	20928 SE 3rd Way	21009 SE 3rd Way	20920 SE 3rd Way	Well 1 (SO1), Well 2.1/2.2 (S18), Well 4 (S17), Well 7 (S06), Well 8 (S07), Well 9 (S13), Well 10 (S11), Well 11.1 (S14), Well 11.2 (S12), CWA South Intertie (S19)
	2	17	24415 SE 4th Pl	24416 SE 4th Pl	24421 SE 4th Pl	Well 1 (SO1), Well 2.1/2.2 (S18), Well 4 (S17), Well 7 (S06), Well 8 (S07), Well 9 (S13), Well 10 (S11), Well 11.1 (S14), Well 11.2 (S12), CWA South Intertie (S19)
	2	19	1510 228th Ave SE	1515 228th Ave SE	1517 228th Ave SE	Well 1 (SO1), Well 2.1/2.2 (S18), Well 4 (S17), Well 7 (S06), Well 8 (S07), Well 9 (S13), Well 10 (S11), Well 11.1 (S14), Well 11.2 (S12), CWA South Intertie (S19)
	2	23	2814 217th Ave SE	2808 217th Ave SE	2820 217th Ave SE	Well 1 (SO1), Well 2.1/2.2 (S18), Well 4 (S17), Well 7 (S06), Well 8 (S07), Well 9 (S13), Well 10 (S11), Well 11.1 (S14), Well 11.2 (S12), CWA South Intertie (S19)v

Table 2: Routine, Repeat and Triggered Source Sample Locations and Weekly Rotation Schedule						
Week		ID No.	Routine Sample Site Location	Upstream Repeat Site	Downstream Repeat Site	Groundwater Sources for Triggered Sample Sites
	2	24	2847 241st Ave SE	2837 241st Ave SE	2861 241st Ave SE	Well 1 (SO1), Well 2.1/2.2 (S18), Well 4 (S17), Well 7 (S06), Well 8 (S07), Well 9 (S13), Well 10 (S11), Well 11.1 (S14), Well 11.2 (S12), CWA South Intertie (S19)
	2	30	4138 205th Ave SE	4139 205th Ave SE	4130 205th Ave SE	Well 1 (SO1), Well 2.1/2.2 (S18), Well 4 (S17), Well 7 (S06), Well 8 (S07), Well 9 (S13), Well 10 (S11), Well 11.1 (S14), Well 11.2 (S12), CWA South Intertie (S19)
	2	35	4040 262nd Pl SE	26221 SE 40th Pl	4032 262nd Pl SE	Well 1 (SO1), Well 2.1/2.2 (S18), Well 4 (S17), Well 7 (S06), Well 8 (S07), Well 9 (S13), Well 10 (S11), Well 11.1 (S14), Well 11.2 (S12), CWA South Intertie (S19)
	2	41	2311 259th Pl SE	2317 259th Pl SE	2219 259th Pl SE	Well 1 (SO1), Well 2.1/2.2 (S18), Well 4 (S17), Well 7 (S06), Well 8 (S07), Well 9 (S13), Well 10 (S11), Well 11.1 (S14), Well 11.2 (S12), CWA South Intertie (S19)
	2	49	6503 E Lake Sammamish Pkwy SE	6415 E Lake Sammamish Pkwy SE	6420 East Lake Sammamish Pkwy SE	Well 1 (SO1), Well 2.1/2.2 (S18), Well 4 (S17), Well 7 (S06), Well 8 (S07), Well 9 (S13), Well 10 (S11), Well 11.1 (S14), Well 11.2 (S12), CWA South Intertie (S19)
	2	52	5150 236th Ave SE	4995 236th Ave SE	23590 SE 52nd St	Well 1 (SO1), Well 2.1/2.2 (S18), Well 4 (S17), Well 7 (S06), Well 8 (S07), Well 9 (S13), Well 10 (S11), Well 11.1 (S14), Well 11.2 (S12), CWA South Intertie (S19)
	2	67	2905 204th Ave SE	2829 204th Ave SE	2915 204th Ave SE	Well 1 (SO1), Well 2.1/2.2 (S18), Well 4 (S17), Well 7 (S06), Well 8 (S07), Well 9 (S13), Well 10 (S11), Well 11.1 (S14), Well 11.2 (S12), CWA South Intertie (S19)
	2	68	20621 NE 8th St	20627 NE 8th St	20609 NE 8th St	Well 1 (SO1), Well 2.1/2.2 (S18), Well 4 (S17), Well 7 (S06), Well 8 (S07), Well 9 (S13), Well 10 (S11), Well 11.1 (S14), Well 11.2 (S12), CWA South Intertie (S19)

Table 2: Routine, Repeat and Triggered Source Sample Locations and Weekly Rotation Schedule						
Week		ID No.	Routine Sample Site Location	Upstream Repeat Site	Downstream Repeat Site	Groundwater Sources for Triggered Sample Sites
	2	72	23944 SE 41st St	4054 239th Pl SE	4060 239th Pl SE	Well 1 (SO1), Well 2.1/2.2 (S18), Well 4 (S17), Well 7 (S06), Well 8 (S07), Well 9 (S13), Well 10 (S11), Well 11.1 (S14), Well 11.2 (S12), CWA South Intertie (S19)
	2	78	21214 SE 40th St	21219 SE 40th	21200 SE 40th PL	Well 1 (SO1), Well 2.1/2.2 (S18), Well 4 (S17), Well 7 (S06), Well 8 (S07), Well 9 (S13), Well 10 (S11), Well 11.1 (S14), Well 11.2 (S12), CWA South Intertie (S19)
	3	5	2404 NE 244th Pl	2403 245th Pl NE	2416 244th Pl NE	Well 1 (SO1), Well 2.1/2.2 (S18), Well 4 (S17), Well 7 (S06), Well 8 (S07), Well 9 (S13), Well 10 (S11), Well 11.1 (S14), Well 11.2 (S12), CWA South Intertie (S19)
	3	10	2575 E Plateau Dr SE	25855 NE 4th PL	25625 E Plateau Dr.	Well 1 (SO1), Well 2.1/2.2 (S18), Well 4 (S17), Well 7 (S06), Well 8 (S07), Well 9 (S13), Well 10 (S11), Well 11.1 (S14), Well 11.2 (S12), CWA South Intertie (S19)
	3	15	21828 SE 1st St	21838 SE 1st St	21827 SE 1st St	Well 1 (SO1), Well 2.1/2.2 (S18), Well 4 (S17), Well 7 (S06), Well 8 (S07), Well 9 (S13), Well 10 (S11), Well 11.1 (S14), Well 11.2 (S12), CWA South Intertie (S19)
	3	18	19820 SE 8th St	19818 SE 8th St	19824 SE 8th St	Well 1 (SO1), Well 2.1/2.2 (S18), Well 4 (S17), Well 7 (S06), Well 8 (S07), Well 9 (S13), Well 10 (S11), Well 11.1 (S14), Well 11.2 (S12), CWA South Intertie (S19)
	3	22	19636 SE 29th St	19640 SE 29th St	19632 SE 29th St	Well 1 (SO1), Well 2.1/2.2 (S18), Well 4 (S17), Well 7 (S06), Well 8 (S07), Well 9 (S13), Well 10 (S11), Well 11.1 (S14), Well 11.2 (S12), CWA South Intertie (S19)
	3	27	3030 E Beaver Lake Dr SE	2830 East Beaver Lake Dr SE	25704 SE 31st Pl SE	Well 1 (SO1), Well 2.1/2.2 (S18), Well 4 (S17), Well 7 (S06), Well 8 (S07), Well 9 (S13), Well 10 (S11), Well 11.1 (S14), Well 11.2 (S12), CWA South Intertie (S19)

Table 2: Routine, Repeat and Triggered Source Sample Locations and Weekly Rotation Schedule					
Week	ID No.	Routine Sample Site Location	Upstream Repeat Site	Downstream Repeat Site	Groundwater Sources for Triggered Sample Sites
3	32	4126 220th Pl SE	4125 220th Pl SE	3727 220th Pl SE	Well 1 (SO1), Well 2.1/2.2 (S18), Well 4 (S17), Well 7 (S06), Well 8 (S07), Well 9 (S13), Well 10 (S11), Well 11.1 (S14), Well 11.2 (S12), CWA South Intertie (S19)
3	45	270th Ave SE & SE 11th St	1101 270h Pl SE	1103 272th Pl SE	Well 1 (SO1), Well 2.1/2.2 (S18), Well 4 (S17), Well 7 (S06), Well 8 (S07), Well 9 (S13), Well 10 (S11), Well 11.1 (S14), Well 11.2 (S12), CWA South Intertie (S19)
3	46	Trossachs Blvd. & SE 24th Ave.	27187 27th St.	2206 SE 22nd Way	Well 1 (SO1), Well 2.1/2.2 (S18), Well 4 (S17), Well 7 (S06), Well 8 (S07), Well 9 (S13), Well 10 (S11), Well 11.1 (S14), Well 11.2 (S12), CWA South Intertie (S19)
3	47	1931 249th Pl SE	2002 249th Pl SE	1927 249th Pl SE	Well 1 (SO1), Well 2.1/2.2 (S18), Well 4 (S17), Well 7 (S06), Well 8 (S07), Well 9 (S13), Well 10 (S11), Well 11.1 (S14), Well 11.2 (S12), CWA South Intertie (S19)
3	48	1537 E. Lk Samm Pkwy NE	1715 E. Lk Samm Pkwy. NE	1560 E. Lk Samm Pkwy NE	Well 1 (SO1), Well 2.1/2.2 (S18), Well 4 (S17), Well 7 (S06), Well 8 (S07), Well 9 (S13), Well 10 (S11), Well 11.1 (S14), Well 11.2 (S12), CWA South Intertie (S19)
3	55	4644 238th Way SE	4634 238th Way SE	4652 238th Way SE	Well 1 (SO1), Well 2.1/2.2 (S18), Well 4 (S17), Well 7 (S06), Well 8 (S07), Well 9 (S13), Well 10 (S11), Well 11.1 (S14), Well 11.2 (S12), CWA South Intertie (S19)
3	57	3609 212th Pl SE	3605 212th Pl SE	3606 212th Pl SE	Well 1 (SO1), Well 2.1/2.2 (S18), Well 4 (S17), Well 7 (S06), Well 8 (S07), Well 9 (S13), Well 10 (S11), Well 11.1 (S14), Well 11.2 (S12), CWA South Intertie (S19)
3	58	21341 SE 13th Pl	21326 SE 13th Pl	21520 SE 13th Pl	Well 1 (SO1), Well 2.1/2.2 (S18), Well 4 (S17), Well 7 (S06), Well 8 (S07), Well 9 (S13), Well 10 (S11), Well 11.1 (S14), Well 11.2 (S12), CWA South Intertie (S19)

Table 2: Routine, Repeat and Triggered Source Sample Locations and Weekly Rotation Schedule						
	Week	ID No.	Routine Sample Site Location	Upstream Repeat Site	Downstream Repeat Site	Groundwater Sources for Triggered Sample Sites
	3	59	1514 235th Ave SE	1630 235th Ave SE	1502 235th Ave SE	Well 1 (SO1), Well 2.1/2.2 (S18), Well 4 (S17), Well 7 (S06), Well 8 (S07), Well 9 (S13), Well 10 (S11), Well 11.1 (S14), Well 11.2 (S12), CWA South Intertie (S19)
	3	60	24213 SE 37th Pl	24207 SE 37th Pl	24303 SE 37th Pl	Well 1 (SO1), Well 2.1/2.2 (S18), Well 4 (S17), Well 7 (S06), Well 8 (S07), Well 9 (S13), Well 10 (S11), Well 11.1 (S14), Well 11.2 (S12), CWA South Intertie (S19)
	3	64	8513 255th Ave NE	8407 255th Ave NE	8535 255th Ave NE	Well 12 (S16), Well 13 (S24), CWA North Intertie (S19)
	3	71	1838 236th Ave NE	23530 NE 17th Pl	1911 236th Ave NE	Well 1 (SO1), Well 2.1/2.2 (S18), Well 4 (S17), Well 7 (S06), Well 8 (S07), Well 9 (S13), Well 10 (S11), Well 11.1 (S14), Well 11.2 (S12), CWA South Intertie (S19)
	4	1	2308 E Lake Sammamish Pl SE	2311 East Lake Sammamish Pl SE	2221 East Lake Sammamish Pl SE	Well 1 (SO1), Well 2.1/2.2 (S18), Well 4 (S17), Well 7 (S06), Well 8 (S07), Well 9 (S13), Well 10 (S11), Well 11.1 (S14), Well 11.2 (S12), CWA South Intertie (S19)
	4	9	823 258th Ave NE	815 258th Ave NE	1004 258th Ave NE	Well 1 (SO1), Well 2.1/2.2 (S18), Well 4 (S17), Well 7 (S06), Well 8 (S07), Well 9 (S13), Well 10 (S11), Well 11.1 (S14), Well 11.2 (S12), CWA South Intertie (S19)
	4	13	230 211th Pl NE	214 211th Pl NE	236 211th Pl NE	Well 1 (SO1), Well 2.1/2.2 (S18), Well 4 (S17), Well 7 (S06), Well 8 (S07), Well 9 (S13), Well 10 (S11), Well 11.1 (S14), Well 11.2 (S12), CWA South Intertie (S19)
	4	20	2030 212th Ave SE	2205 212th Ave SE	1904 212th Ave SE	Well 1 (SO1), Well 2.1/2.2 (S18), Well 4 (S17), Well 7 (S06), Well 8 (S07), Well 9 (S13), Well 10 (S11), Well 11.1 (S14), Well 11.2 (S12), CWA South Intertie (S19)
	4	26	3045 249th Ave SE	3044 249th Ave SE	3037 249th Ave SE	Well 1 (SO1), Well 2.1/2.2 (S18), Well 4 (S17), Well 7 (S06), Well 8 (S07), Well 9 (S13), Well 10 (S11), Well 11.1 (S14), Well 11.2 (S12), CWA South Intertie (S19)

Table 2: Routine, Repeat and Triggered Source Sample Locations and Weekly Rotation Schedule						
Week		ID No.	Routine Sample Site Location	Upstream Repeat Site	Downstream Repeat Site	Groundwater Sources for Triggered Sample Sites
	4	28	2917 266th Ave SE	2819 266th Ave SE	2922 266th Ave SE	Well 1 (SO1), Well 2.1/2.2 (S18), Well 4 (S17), Well 7 (S06), Well 8 (S07), Well 9 (S13), Well 10 (S11), Well 11.1 (S14), Well 11.2 (S12), CWA South Intertie (S19)
	4	33	3725 Providence Point Dr SE	3710 Providence Point Dr. SE	3727 Providence Point Dr. SE	Well 1 (SO1), Well 2.1/2.2 (S18), Well 4 (S17), Well 7 (S06), Well 8 (S07), Well 9 (S13), Well 10 (S11), Well 11.1 (S14), Well 11.2 (S12), CWA South Intertie (S19)
	4	36	4606 247th Pl SE	4561 247th Pl SE	4612 247th Pl SE	Well 1 (SO1), Well 2.1/2.2 (S18), Well 4 (S17), Well 7 (S06), Well 8 (S07), Well 9 (S13), Well 10 (S11), Well 11.1 (S14), Well 11.2 (S12), CWA South Intertie (S19)
	4	40	SE 44th and 232nd Ct SE	23209 SE 44th St	4305 SE Issaquah-Pine Lake Rd.	Well 1 (SO1), Well 2.1/2.2 (S18), Well 4 (S17), Well 7 (S06), Well 8 (S07), Well 9 (S13), Well 10 (S11), Well 11.1 (S14), Well 11.2 (S12), CWA South Intertie (S19)
	4	42	222 238th Ave SE	218 238th Ave SE	23808 SE 2nd Pl	Well 1 (SO1), Well 2.1/2.2 (S18), Well 4 (S17), Well 7 (S06), Well 8 (S07), Well 9 (S13), Well 10 (S11), Well 11.1 (S14), Well 11.2 (S12), CWA South Intertie (S19)
	4	43	21838 NE 18th Way	21903 NE 18th Way	21822 NE 18th St	Well 1 (SO1), Well 2.1/2.2 (S18), Well 4 (S17), Well 7 (S06), Well 8 (S07), Well 9 (S13), Well 10 (S11), Well 11.1 (S14), Well 11.2 (S12), CWA South Intertie (S19)
	4	50	23425 SE Black Nugget Rd	23205 SE Black Nugget Rd	23425 SE Black Nugget Rd (Club house)	Well 1 (SO1), Well 2.1/2.2 (S18), Well 4 (S17), Well 7 (S06), Well 8 (S07), Well 9 (S13), Well 10 (S11), Well 11.1 (S14), Well 11.2 (S12), CWA South Intertie (S19)
	4	51	NE 8th Pl & 233rd Ave NE	817 233rd Ave NE	23306 NE 8th Pl	Well 1 (SO1), Well 2.1/2.2 (S18), Well 4 (S17), Well 7 (S06), Well 8 (S07), Well 9 (S13), Well 10 (S11), Well 11.1 (S14), Well 11.2 (S12), CWA South Intertie (S19)
	4	53	25913 NE 27th Dr	25923 NE 27th Dr	25901 NE 25th St	Well 12 (S16), Well 13 (S24), CWA North Intertie (S19)

Table 2: Routine, Repeat and Triggered Source Sample Locations and Weekly Rotation Schedule						
Week		ID No.	Routine Sample Site Location	Upstream Repeat Site	Downstream Repeat Site	Groundwater Sources for Triggered Sample Sites
	4	69	265th Ave SE & Belvedere Way	1932 SE Belvedere Way	1901 264th Pl SE	Well 1 (SO1), Well 2.1/2.2 (S18), Well 4 (S17), Well 7 (S06), Well 8 (S07), Well 9 (S13), Well 10 (S11), Well 11.1 (S14), Well 11.2 (S12), CWA South Intertie (S19)
	4	70	21606 SE 16th Pl	21520 SE 16th Pl	21616 SE 16th Pl	Well 1 (SO1), Well 2.1/2.2 (S18), Well 4 (S17), Well 7 (S06), Well 8 (S07), Well 9 (S13), Well 10 (S11), Well 11.1 (S14), Well 11.2 (S12), CWA South Intertie (S19)
	4	73	23039 SE 37th St	23023 SE 37th St	23307 SE 37th St	Well 1 (SO1), Well 2.1/2.2 (S18), Well 4 (S17), Well 7 (S06), Well 8 (S07), Well 9 (S13), Well 10 (S11), Well 11.1 (S14), Well 11.2 (S12), CWA South Intertie (S19)

Important Notes for Sample Collector:

SPWSD STANDARD OPERATING PROCEDURE
COLLECTING MONTHLY BATERIOLOGICAL SAMPLES

1. Use the weekly sample schedule to determine for which week of the month you are taking samples.
2. It is best to collect routine samples at the beginning of the week. Many labs do not accept samples at the end of the week or on weekends. Even if your lab does accept samples, it is often hard for a water system to respond adequately to sample results on a Friday afternoon or weekend. Avoid collecting routine coliform samples during weeks that contain major holidays or staff vacations unless you know trained staff and your laboratory are able to respond to unsatisfactory sample results.
3. Access the monthly sample folder on one of the Tough-pads.
   - Ensure that all network drives are connected and synchronize updates in the monthly sample folder.
4. Collect all the necessary materials, paperwork and testing equipment you will need to complete the sampling process. The list includes the following:
   - Tough-pad with updated weekly sample folder
   - Cooler
   - Bac-t disinfectant spray
   - Chlorine testing kit (make sure that batteries are good and that you have sufficient total and free chlorine packets.)
   - 7-9 bacteriological sample bottles (250 Ml or 8 *oz.,* marked on bottom)
   - Water management paperwork for Water Bacteriological Analysis; should be pre-populated

with generic Sammamish Plateau Water information and have four carbon copies. (white, blue, green, yellow)
- Hand pump with hose and appropriate attachment to remove water after sample completion.
- 7-10 rubber bands
- Thin point sharpie (for writing on bottles)
- Ball point pen

5. Drive to appropriate sample location based on that week's testing sites. Make sure the sampling station is clear from obstructions such as shrubs. Make sure the station is clean. Unlock using the 2402 key and open the door, making sure that the number written on inside of door matches the number on corresponding sample site on tough-pad sample sheet.
6. If the weather is windy or rainy, ensure that the sample can be taken without potentially contaminating the sample (e.g. protect the station with your coat or an umbrella.)
7. Spray Bac-T disinfectant spray on the main spigot and copper line in the sample station.
8. Turn on the water and allow water to run hard for 5 minutes.
9. Turn down the water down and allow it to run smoothly so samples can be taken with no splashing.
10. Take chlorine (both total and free) samples to gather the complete distribution system chlorine sample and mark the numbers on the sample sheet on the Tough-pad. Rinse out the glass chlorine sample bottles to remove chemicals and keep the glass clear.
11. Fill out the label on the bottle with a Sharpie pen. Include date, time, sample location and that the sample is being done for SPWSD.
12. There is liquid in bottle to neutralize any chlorine that may be present. Do not rinse this out.
13. To avoid contamination while taking sample, follow these steps;
    - Hold bottle near the bottom with one hand while the other hand unscrews the cap.
    - Do not set the cap down, touch any part of cap that touches bottle, or let anything touch the rim or inside of the cap.
14. Hold the bottle under a smooth stream of water, being careful not to let bottle touch the sample tap. Fill to the shoulder of the bottle. DO NOT OVERFILL! Remove the bottle from the stream and immediately replace the cap.
15. Complete the water bacteriological analysis paperwork. Information needed will include:
    - Date sample was collected
    - Time collected **(the time on the bottle and paperwork must be the same!)**
    - Specific location where the sample was taken (example: Sample station # 00.)
    - Who collected the sample
    - Make sure the “Routine Drinking Water with Chlorinated” box is checked and include your total and free sample readings.
16. Dry off the bottle and review the information written on bottle and paperwork to ensure that the information is the same. Pay particular attention to where and when the sample was taken.
17. Roll paperwork around corresponding bottle and secure it with a rubber band.
18. Place the completed sample with paperwork attached into the cooler for safe keeping and to control the sample temperature.
19. During cold weather months, use a small hand pump to remove water from the copper line. This will prevent the line from freezing.

20. Close the door and make sure the lock is secure.
21. Clean up any mess around sample location and secure the truck.
22. Repeat step 4 and drive to the next sample location.
23. After completion of all weekly bacteriological samples, place all samples into one cooler and deliver the samples to the lab within 30 hours of collection.
24. Fill out your time in the Maintenance Connection software and include labor hours and truck used. In the task section of your work order, find the sample location by week, mark it off as completed, and write your initials.

Washington Department of Health Coliform Sampling Procedure

The following text provides general information on how to collect a coliform sample. The Department of Health recommends that you collect your sample using the following steps. If instructions from your laboratory are different, you should follow the steps listed here. Generally, the sample kit contains:

- A sample bottle
- A lab form
- A rubber band

The general sampling procedure for coliform monitoring is as follows:

Step One

Routine and repeat samples should be collected from sites throughout the distribution system in according with your Coliform Monitoring Plan.

Choose a sample tap that represent the water in your distribution system. Avoid poor sample sites such as swivel faucets, hot and cold mixing faucets with a single lever, leaky or spraying faucets, drinking fountains, janitorial sinks, frost-free hose bibs, and faucets below or near ground level

Step Two

Remove any attachments form the faucet, including aerators, screens, washers, hoses and water filters. If you choose to disinfect the sample site prior to sample collection, be sure to thoroughly flush until all disinfectant is removed.

Step Three

Turn on the cold water only and let it run with a steady stream for at least five minutes. Before collecting the sample, turn the water down to a thin stream (about the width of a pencil) then let the water run one minute. If the system is chlorinated, measure the chlorine residual and note the results on the lab slip. Water conservation tip: The flushed water may be saved in a bucket to be used later.

Step Four

There may be some liquid or powder in the sample bottle to neutralize any chlorine that may be present. Do not rinse it out.

Step Five

To avoid contamination while taking the sample, hold the bottle near the bottom with one hand, hold the top of the cap with the other, and then unscrew the cap. Do not set the cap down, touch any part of the cap that touches the bottle, or let anything touch the rim or inside the cap.

Correct Completion of a Washington State Department of Health Coliform Lab Slip

This information is a refresher for water system operators on the correct way to fill out the lab slip that is submitted with coliform samples.

Note: Use this information only when filling out the Washington Department of Health Water Bacteriological Analysis slips to send to Water Management Laboratories, Inc. If you are submitting samples to Seattle Public Utilities for bacteriological samples, use their form instead.

All parts of the lab slip are important. *The Department of Health will not accept the sample result if there is missing or incomplete information regarding date, time, system ID number, system name, or type of sample. Be sure to fill out every box.*

Date Collected and **Time Collected:** Refer to collection of the sample.

County Name: The county where the system is located.

Type of System: Check "Public."

If Public System, Complete: Include all six characters of System ID Number, in the correct order.

Circle Group: Circle if system is a "Group A" or "Group B" system.

Name of System: As it is shown on DOH records such as the Water Facilities Inventory (WFI) form for your system.

Specific Location Where Sample Was Collected: This should include the address and the type of faucet from which the sample was collected. For example: "Bathroom faucet at 123 Ivy Lane."

Telephone Number - Day and Evening: Day and evening phones where the sample collector or the system owner/manager can be contacted.

Sample Collected By: The name of the person collecting the sample.

Name of System Owner/Manager: The name of the person responsible for operating the system.

Source Type: Check which type of source supplies the water system.

Send Report To: Name and address where the lab should send the water system's copy of the results. *(Note: The lab also sends a copy of the results to DOH, so you generally don't have to.)*

Type of Sample: Check ONLY ONE box in the left hand column of this section. The different types of samples are:

- **Routine** samples are those collected for compliance with the monthly sampling requirements. To the right of the Routine box: If the system is serving treated water, check the appropriate boxes for indicate the type of treatment The chlorine residual should be recorded each time a coliform sample is collected form a system that treats its water with chlorine.
- **Repeat** samples are collected immediately after a Routine sample is found to be

unsatisfactory. To receive credit for repeat samples, you must enter the lab number of the original unsatisfactory Routine sample and the date the Routine sample was collected. The lab can give you this information when they notify you of the Routine sample results. Note: If your system is treated with chlorine, measure the chlorine residual when each repeat sample is collected and write the residual in the space adjacent to the Routine Box.

- **Raw source water** samples should include the two-digit source number that is found on your Water Facilities Inventory (WFI.) This type of sample is collected from the source prior to treatment and is required for systems using surface water sources.
- **New construction/repairs** or **Other** types of samples will not count for compliance. **Other** types should be used for investigative or engineering samples.

Remarks: Note any special instructions that you have for the lab.

(Lab Use Only) Drinking Water Results: Don't enter anything in this section.

Water Management Laboratories Bacteriological Sampling Procedure

How to Take a Water Sample

Always thoroughly clean the faucet and/ or tap with a solution of 10% bleach (unscented) to 90% water in a spray bottle. Avoid using a kitchen tap. If you must use one, remove the faucet aerator screen and disinfect the faucet with a bleach/water solution. When using an outside tap, make sure it is clean and not obstructed by shrubs or other plants. Never take a sample from a garden hose. Avoid sampling during strong winds. Do not remove the cap from the sample bottle until immediately before taking the sample.

1. Disinfect tap with the bleach/water mixture.
2. Turn on the water. Let it run hard for 5 minutes.
3. Repeat steps 1 and 2. Then turn the flow down until there is a smooth stream with no splashing. Let water run for 2 minutes.
4. Uncap the bottle and fill it to the shoulder. Place the cap back on the bottle.

Sample must be kept cold by placing in a cooler or a refrigerator. Deliver the sample to the lab within 30 hours from the time it is taken. The lab will not accept samples after 5:00 p.m. without prior arrangements.

Seattle Public Utilities Water Testing Protocol

District staff must use the Seattle Public Utilities Chain of Custody Record whenever submitting samples to Seattle's Water Quality Laboratory for analysis. A copy of this document is attached at the end of this document.

E. Reduced Triggered Source Monitoring Justification (add sheets as needed):

Refer to Sammamish Plateau Water and Sewer District's Triggered Ground Water Monitoring Plan for more information.

F. Routine Sample Rotation Schedule

See Section D, Table 2: Routine, Repeat and Triggered Source Sample Locations and Weekly Rotation Schedule

G. Level 1 and Level 2 Assessment Contact Information

Name **John Anderson, Water Superintendent**	**Office Phone 425-295-3226** **After Hours Phone 425-495-6527**
Address **1510 228th Avenue SE, Sammamish WA 98075**	**Email: john.anderson@spwater.org**
Name **Scott Jonas, Operations Manager**	**Office Phone 425-295-3226** **After Hours Phone 425-495-6528**
Address **1510 228th Avenue SE, Sammamish WA 98075**	**Email: scott.jonas@spwater.org**

H. *E. coli*-Present Response Plan

Distribution System *E. coli* Response Checklist				
Background Information	**Yes**	**No**	**N/A**	**To Do List**
We inform staff members about activities within the distribution system that could affect water quality.	☒	☐	☐	☐
We document all water main breaks, construction & repair activities, and low pressure and outage incidents.	☒	☐	☐	☐
We can easily access and review documentation on water main breaks, construction & repair activities, and low pressure and outage incidents.	☒	☐	☐	☐
Our Cross-Connection Control Program is up-to-date.	☒	☐	☐	☐
We test all cross-connection control devices annually as required, with easy access to the proper documentation.	☒	☐	☐	☐
We routinely inspect all treatment facilities for proper operation.	☒	☐	☐	☐
We identified one or more qualified individuals who are able to conduct a Level 2 assessment of our water system.	☒	☐	☐	☐

We have procedures in place for disinfecting and flushing the water system if it becomes necessary.	☒	☐	☐	☐
We can activate an emergency intertie with an adjacent water system in an emergency.	☒	☐	☐	☐
We have a map of our service area boundaries.	☒	☐	☐	☐
We have consumers who may not have access to bottled or boiled water.	☐	☒	☐	☐
There is a sufficient supply of bottled water immediately available to our customers who are unable to boil their water.	☒	☐	☐	☐
We have identified the contact person at each day care, school, medical facility, food service, and other customers who may have difficulty responding to a Health Advisory.	☐	☐	☐	☒
We have messages prepared and translated into different languages to ensure our consumers will understand them.	☒	☐	☐	☐
We have the capacity to print and distribute the required number of notices in a short time period.	☒	☐	☐	☐
Policy Direction	**Yes**	**No**	**N/A**	**To Do List**
We have discussed the issue of *E. coli*-present sample results with our policy makers.	☐	☐	☐	☒
If we find *E. coli* in a routine distribution sample, the policy makers want to wait until repeat test results are available before issuing advice to water system customers.	☐	☐	☐	☒
Potential Public Notice Delivery Methods	**Yes**	**No**	**N/A**	**To Do List**
It is feasible to deliver a notice going door-to-door.	☐	☒	☐	☐
We have a list of all of our customers' addresses.	☒	☐	☐	☐
We have a list of customer telephone numbers or access to a Reverse 9-1-1 system.	☐	☐	☐	☒
We have a list of customer email addresses.	☐	☒	☐	☐
We encourage our customers to remain in contact with us using social media.	☒	☐	☐	☐
We have an active website we can quickly update to include important messages.	☒	☐	☐	☐
Our customers drive by a single location where we could post an advisory and expect everyone to see it.	☐	☒	☐	☐
We need a news release to supplement our public notification process.	☐	☒	☐	☐

Distribution System *E. coli* Response Plan

If we have *E. coli* in our distribution system we will immediately:

1. Call DOH at the Northwest Regional Office in Kent.
   Coliform Program: 253-395-6775, Main Office: 253-395-6750.
2. Contact NE Sammamish Sewer and Water District at 425-868-1144 (24 hour emergency number); the City of Issaquah at 425-837-3470 (normal business hours) or 425-837-3200 (after business hours); Union Hill Water Association (425) 497-1812 (24-hour emergency number); Ames Lake Water Association (425) 222-7003 (24-hour emergency number); Redmond Water Operations (425) 556-2800 (24 hour emergency number); Cascade Water Alliance (425) 493-0930; and Seattle Public Utilities (206) 386-1800 (24-hour emergency number).
3. Collect three repeat and triggered source samples as outlined in Part D. Collect additional investigative samples as necessary.
4. Send the total coliform positive sample to a certified laboratory for analysis for fecal coliform or *E.coli.* Collect repeat samples as identified in part D. Collect additional investigative samples as necessary or as directed by DOH.
5. Inspect water system facilities, including treatment station for proper operation.
6. Interview staff to determine whether or not anything unusual was happening in the water system service area, especially since the previous month's samples.
7. Review Cross Connection Control Program status.
8. Review new construction activities, water main breaks and pressure outages that may have occurred during the previous months.
9. Wait for repeat sample results.
10. Discuss with DOH whether to issue a Public Health Advisory/Boil Water notice based on the findings of steps 3-6. If necessary, prepare and issue the Health Advisory (HA) and other public notification materials. Templates are available in the District's Emergency Response Plan.
11. Increase chlorine dose at treatment facilities throughout the system to 1.0 mg/l.
12. Flush affected portions of the distribution system.
13. Respond appropriately to satisfactory repeat results: Lift Health Advisory if one was issued.
14. If repeat sample is unsatisfactory, issue an HA if one has not already been issued. Host DOH staff for a water system inspection and respond accordingly to inspection findings.
15. Send media releases to broadcast networks (radio and television)
16. Post information on District website.
17. Post on District social media sites.
18. Post "Boil Water" sign panels on District water advisory signs at all entrances to the District's service area.
19. Post multilingual notices in various locations such as city halls, libraries and shopping centers. Notices are printed in the top seven languages spoken in Sammamish and an image of a boiling water kettle. See example in Section J.
20. Work with Seattle/King County Department of Health regarding informational postings at restaurants.

***E. coli*-Present Triggered Source Sample Response Checklist – All Sources**				
Background Information	**Yes**	**No**	**N/A**	**To Do List**
We review our sanitary survey results and respond to any recommendations affecting the microbial quality of our water supply.	☒	☐	☐	☐
We address any significant deficiencies identified during a sanitary survey.	☒	☐	☐	☐
There are contaminant sources within our Wellhead Protection Area that could affect the microbial quality of our source water, and if yes, we can eliminate them.	☒ ☐	☐ ☐	☐ ☐	☐ ☒
We routinely inspect our well site(s).	☒	☐	☐	☐
We have a good raw water sample tap installed at each source.	☒	☐	☐	☐
After we complete work on a source, we disinfect the source, flush, and collect an investigative sample.	☒	☐	☐	☐
Public Notice	**Yes**	**No**	**N/A**	**To Do List**
We discussed the requirement for immediate public notice of an *E. coli*-present source sample result with our water system's governing body (board of directors or commissioners) and received direction from them on our response plan.	☐	☐	☐	☒
We discussed the requirement for immediate public notice of an *E. coli*-present source sample result with our wholesale customers and encouraged them to develop a response plan.	☐	☐	☐	☒
We have prepared templates and a communications plan that will help us quickly distribute our messages.	☒	☐	☐	☐

***E. coli*-Present Triggered Source Sample Response Checklist – All Sources**				
Alternate Sources	**Yes**	**No**	**N/A**	**To Do List**
We can stop using this source and still provide reliable water service to our customers.	☒	☐	☐	☐
We have an emergency intertie with a neighboring water system that we can use until corrective action is complete (perhaps for several months).	☒	☐	☐	☐
We can provide bottled water to all or part of the distribution system for an indefinite period.	☐	☒	☐	☐
We can quickly replace our existing source of supply with a more protected new source.	☐	☒	☐	☐
Temporary Treatment	**Yes**	**No**	**N/A**	**To Do List**
This source is continuously chlorinated, and our existing facilities can provide 4-log virus treatment (CT = 6) before the first customer. If yes, at what concentration? 2.0 mg/L	☒	☐	☐	☐
We can quickly introduce chlorine into the water system and take advantage of the existing contact time to provide 4-log virus treatment to a large portion of the distribution system.	☐	☒	☐	☐
We can reduce the production capacity of our pumps or alter the configuration of our storage quantities (operational storage) to increase the amount of time the water stays in the system before the first customer to achieve CT = 6.	☐	☒	☐	☐
We can alter the demand for drinking water (maximum day or peak hour) through conservation messages to increase the time the water is in the system prior to the first customer in order to achieve 4-log virus treatment with chlorine.	☒	☐	☐	☐

E. coli-Present Triggered Source Sample Response Plan – Plateau Zone Sources (Wells 1R, 2.1, 2.2, 4R, 7, 8, 9, 10, 11.1 and 11.2)

If we have *E. coli* in a Plateau Zone source we will immediately:

1. Call DOH at the Northwest Regional Office in Kent.
   Coliform Program: 253-395-6775, Main Office: 253-395-6750.
2. Contact NE Sammamish Sewer and Water District at 425-868-1144 (24 hour emergency number); the City of Issaquah at 425-837-3470 (normal business hours) or 425-837-3200 (after business hours); Cascade Water Alliance (425) 493-0930, and Seattle Public Utilities (206) 386-1800 (24-hour emergency line.)
3. Collect additional repeat and triggered source samples as directed by DOH. Collect additional investigative samples as necessary.
4. Send the total coliform positive sample to a certified laboratory for analysis for fecal coliform or *E.coli.* Collect repeat samples as identified in Section D. Collect additional investigative samples as necessary or as directed by DOH.
5. Inspect water system facilities, including treatment station for proper operation.
6. Interview staff to determine whether or not anything unusual was happening in the water system service area, especially since the previous month's samples.
7. Review Cross Connection Control Program status.
8. Review new construction activities, water main breaks and pressure outages that may have occurred during the previous months.
9. Send media releases to broadcast networks (radio and television)
10. Post information on District website.
11. Post on District social media sites.
12. Post "Boil Water" sign panels on District water advisory signs at all entrances to the District's service area.
13. Post multilingual notices in various locations such as city halls, libraries and shopping centers. Notices are printed in the top seven languages spoken in Sammamish and an image of a boiling water kettle. See example in Section J.
14. Work with Seattle/King County Department of Health regarding informational postings at restaurants.

E. coli-Present Triggered Source Sample Response Plan – Cascade View Zone Sources(Wells 12R and 13R)

If we have *E. coli* in a Cascade View Zone source we will immediately:

1. Call DOH at the Northwest Regional Office in Kent.
   Coliform Program: 253-395-6775, Main Office: 253-395-6750.
2. Contact Union Hill Water Association (425) 497-1812 (24-hour emergency number); Ames Lake Water Association (425) 222-7003 (24-hour emergency number); Redmond Water Operations (425) 556-2800; Cascade Water Alliance (425) 493-0930, and Seattle Public Utilities (206) 386-1800 (24-hour emergency line.)
3. Collect additional repeat and triggered source samples as directed by DOH. Collect additional investigative samples as necessary.
4. Send the total coliform positive sample to a certified laboratory for analysis for fecal coliform or *E.coli.* Collect repeat samples as identified in Section D. Collect additional investigative samples as necessary or as directed by DOH.
5. Inspect water system facilities, including treatment station for proper operation.
6. Interview staff to determine whether or not anything unusual was happening in the water system service area, especially since the previous month's samples.
7. Review Cross Connection Control Program status.
8. Review new construction activities, water main breaks and pressure outages that may have occurred during the previous months.
9. Send media releases to broadcast networks (radio and television)
10. Post information on District website.
11. Post on District social media sites.
12. Post "Boil Water" sign panels on District water advisory signs at all entrances to the District's service area.
13. Post multilingual notices in various locations such as city halls, libraries and shopping centers. Notices are printed in the top seven languages spoken in Sammamish and an image of a boiling water kettle. See example in Section J.
14. Work with Seattle/King County Department of Health regarding informational postings at restaurants.

I. System Maps

- Overall TCR Sampling Map
- Week 1 Sample Stations, including Before (Upstream) and After (Downstream) Sampling Locations
- Week 2 Sample Stations, including Before (Upstream) and After (Downstream) Sampling Locations
- Week 3 Sample Stations, including Before (Upstream) and After (Downstream) Sampling Locations
- Week 4 Sample Stations, including Before (Upstream) and After (Downstream) Sampling Locations

This page intentionally left blank.

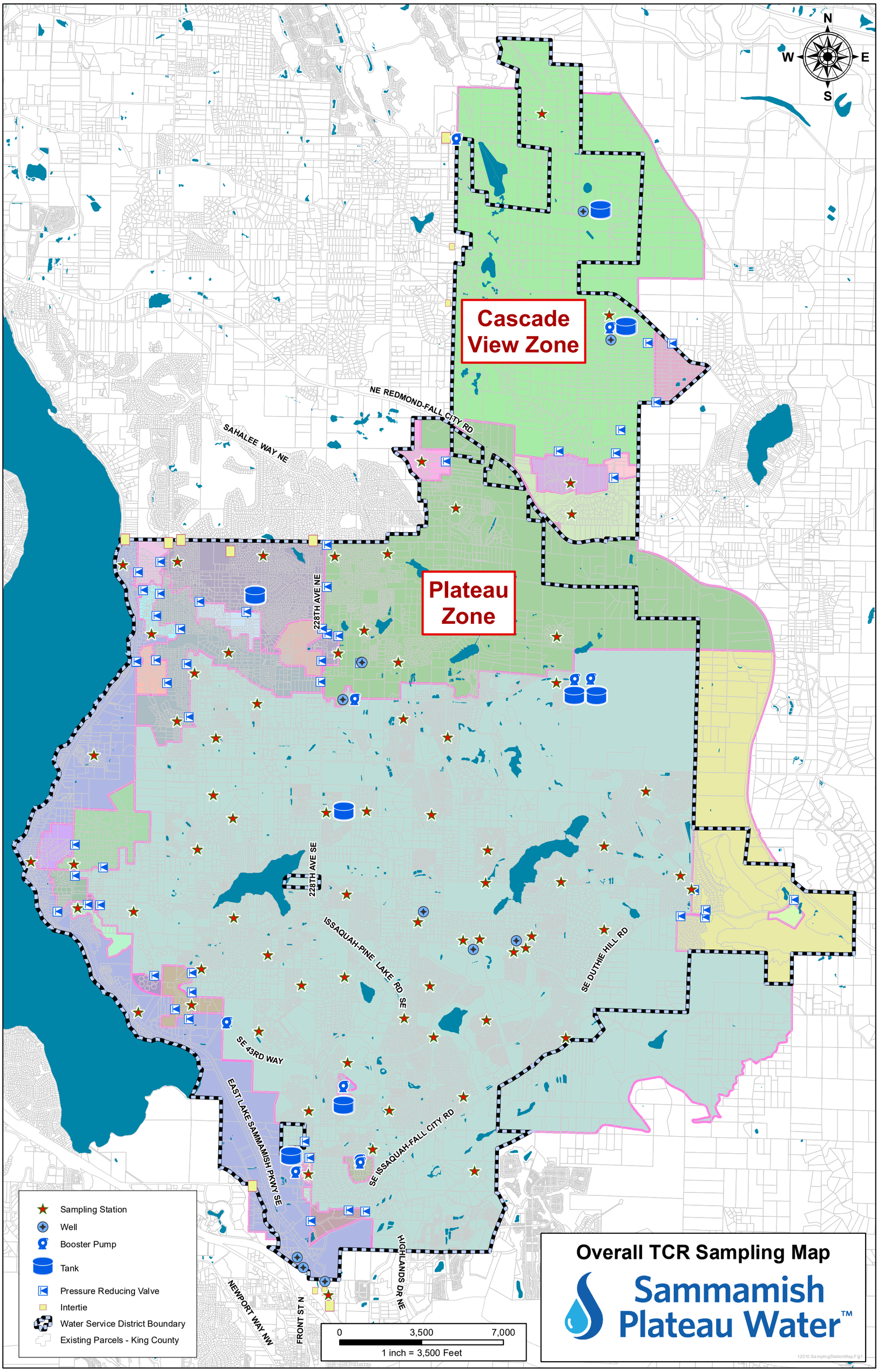
N
W
E
S
Cascade View Zone
Plateau Zone
NE REDMOND-FALL CITY RD
SAHALEE WAY NE
228TH AVE NE
228TH AVE SE
ISSAQUAH-PINE LAKE RD SE
SE DUTHIE HILL RD
SE 43RD WAY
EAST LAKE SAMMAMISH PKWY SE
SE ISSAQUAH-FALL CITY RD
HIGHLANDS DR NE
NEWPORT WAY NW
FRONT ST N
Sampling Station
Well
Booster Pump
Tank
Pressure Reducing Valve
Intertie
Water Service District Boundary
Existing Parcels - King County
0
3,500
7,000
1 inch = 3,500 Feet
Overall TCR Sampling Map
Sammamish Plateau Water™

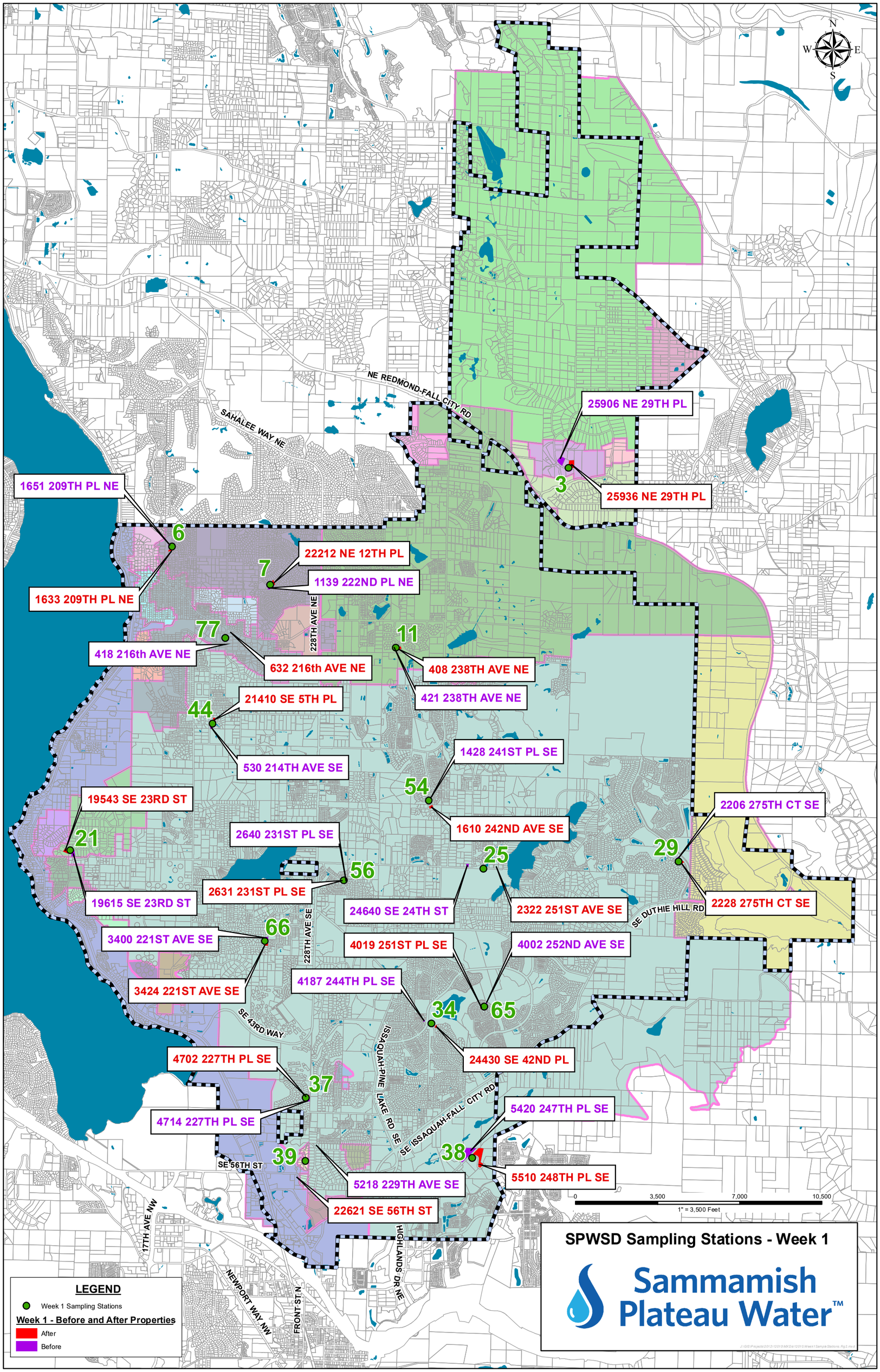
N
W
E
S
NE REDMOND-FALL CITY RD
SAHALEE WAY NE
25906 NE 29TH PL
3
25936 NE 29TH PL
1651 209TH PL NE
6
1633 209TH PL NE
22212 NE 12TH PL
7
1139 222ND PL NE
228TH AVE NE
77
418 216th AVE NE
632 216th AVE NE
11
408 238TH AVE NE
421 238TH AVE NE
21410 SE 5TH PL
44
530 214TH AVE SE
1428 241ST PL SE
54
1610 242ND AVE SE
19543 SE 23RD ST
21
19615 SE 23RD ST
2640 231ST PL SE
56
2631 231ST PL SE
25
24640 SE 24TH ST
2322 251ST AVE SE
2206 275TH CT SE
29
2228 275TH CT SE
SE DUTHIE HILL RD
3400 221ST AVE SE
66
3424 221ST AVE SE
228TH AVE SE
4019 251ST PL SE
4002 252ND AVE SE
4187 244TH PL SE
34
65
24430 SE 42ND PL
SE 43RD WAY
ISSAQUAH-PINE LAKE RD SE
SE ISSAQUAH-FALL CITY RD
4702 227TH PL SE
37
4714 227TH PL SE
5420 247TH PL SE
38
5510 248TH PL SE
39
SE 56TH ST
5218 229TH AVE SE
22621 SE 56TH ST
17TH AVE NW
NEWPORT WAY NW
FRONT ST N
HIGHLANDS DR NE
0
3,500
7,000
10,500
1" = 3,500 Feet
SPWSD Sampling Stations - Week 1
Sammamish Plateau Water™
LEGEND
Week 1 Sampling Stations
Week 1 - Before and After Properties
After
Before

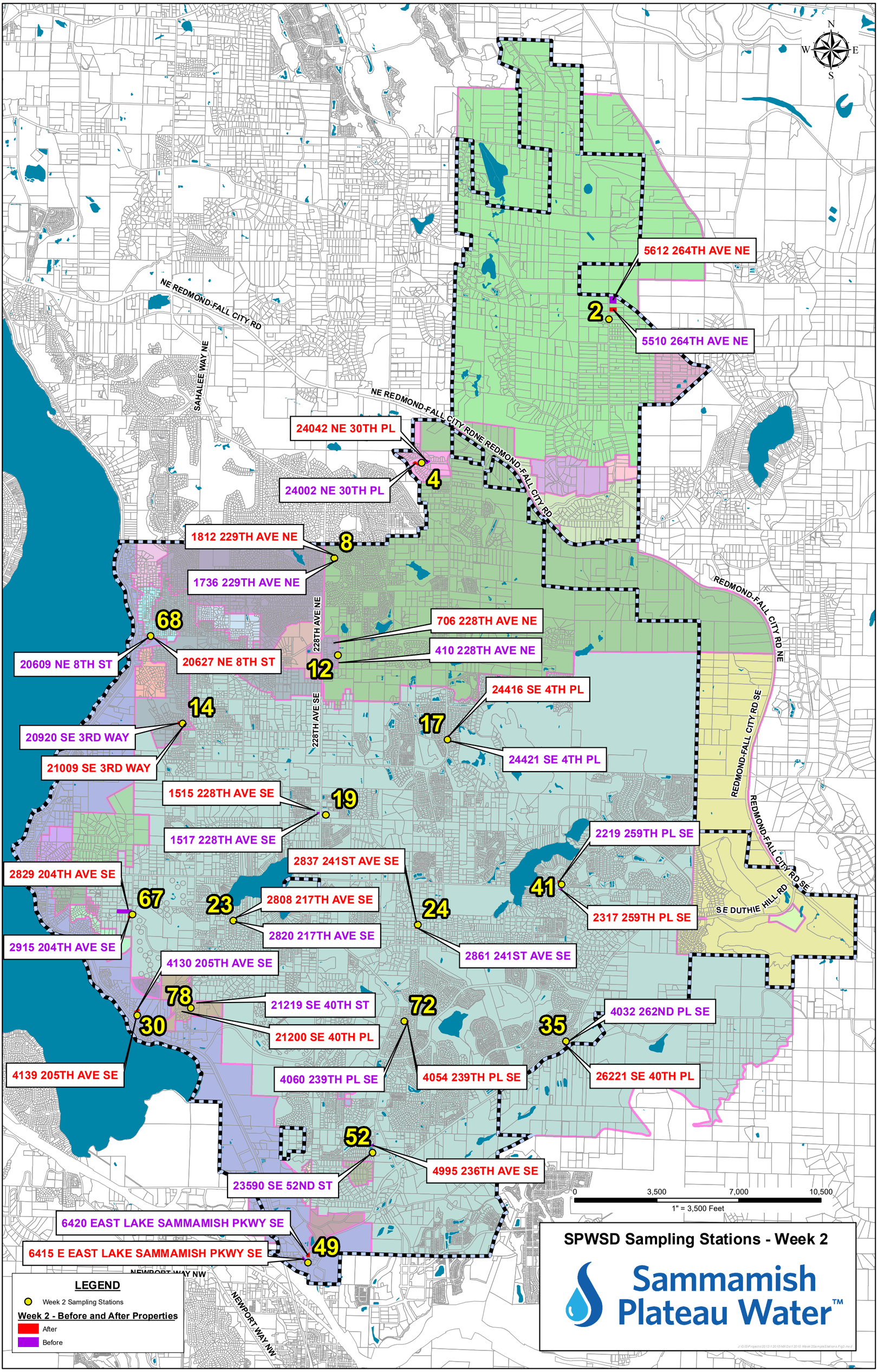
SPWSD Sampling Stations - Week 2
Sammamish Plateau Water™
LEGEND
Week 2 Sampling Stations
Week 2 - Before and After Properties
After
Before
1" = 3,500 Feet
0
3,500
7,000
10,500
N
S
E
W
2
5612 264TH AVE NE
5510 264TH AVE NE
4
24042 NE 30TH PL
24002 NE 30TH PL
8
1812 229TH AVE NE
1736 229TH AVE NE
68
20609 NE 8TH ST
20627 NE 8TH ST
12
706 228TH AVE NE
410 228TH AVE NE
14
20920 SE 3RD WAY
21009 SE 3RD WAY
17
24416 SE 4TH PL
24421 SE 4TH PL
19
1515 228TH AVE SE
1517 228TH AVE SE
67
2829 204TH AVE SE
2915 204TH AVE SE
23
2808 217TH AVE SE
2820 217TH AVE SE
24
2837 241ST AVE SE
2861 241ST AVE SE
41
2219 259TH PL SE
2317 259TH PL SE
30
4130 205TH AVE SE
4139 205TH AVE SE
78
21219 SE 40TH ST
21200 SE 40TH PL
72
4060 239TH PL SE
4054 239TH PL SE
35
4032 262ND PL SE
26221 SE 40TH PL
52
23590 SE 52ND ST
4995 236TH AVE SE
49
6420 EAST LAKE SAMMAMISH PKWY SE
6415 E EAST LAKE SAMMAMISH PKWY SE
NE REDMOND-FALL CITY RD
SAHALEE WAY NE
228TH AVE NE
228TH AVE SE
REDMOND-FALL CITY RD NE
REDMOND-FALL CITY RD SE
SE DUTHIE HILL RD
NEWPORT WAY NW

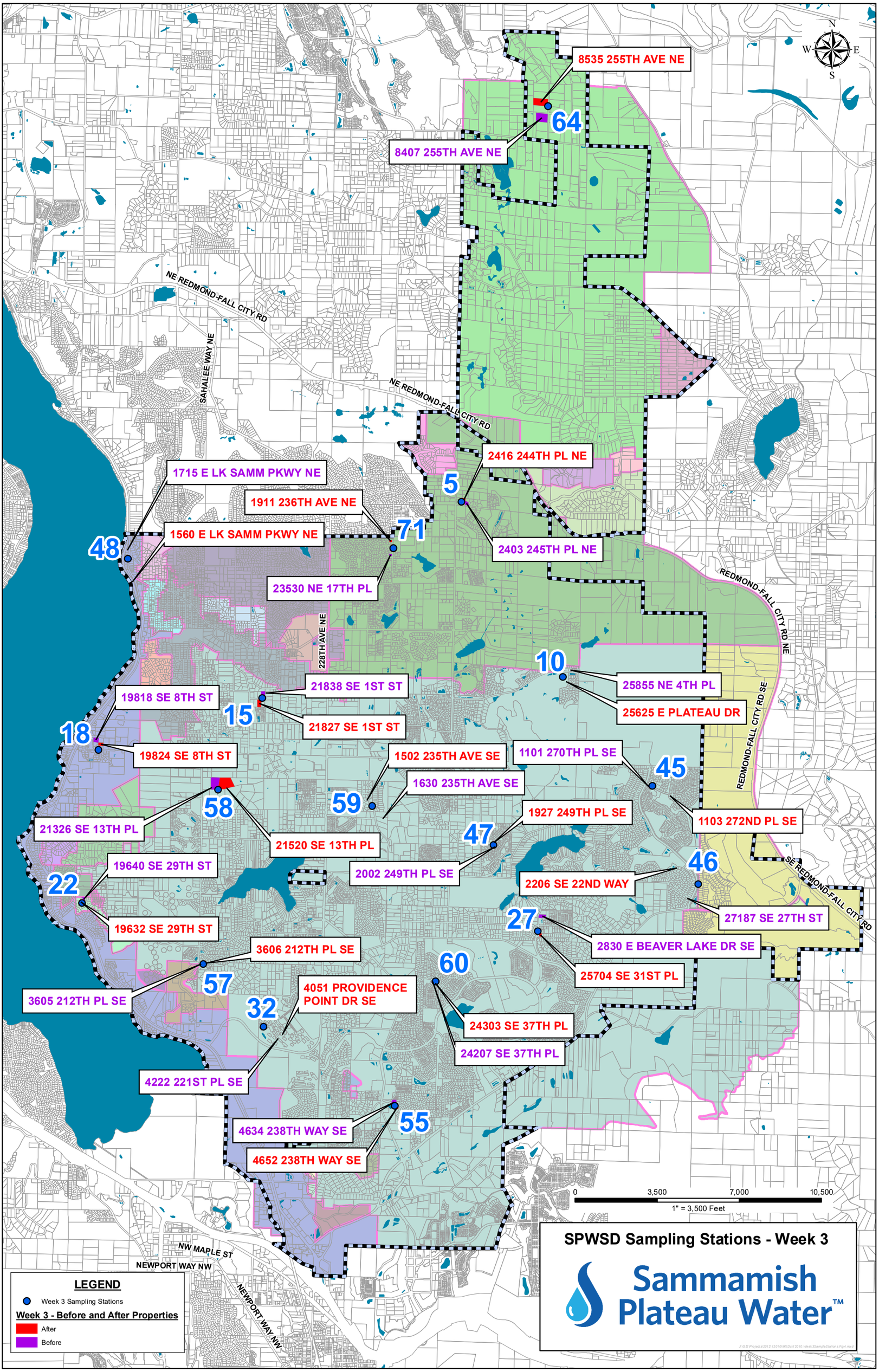
SPWSD Sampling Stations - Week 3
Sammamish Plateau Water™
LEGEND
Week 3 Sampling Stations
Week 3 - Before and After Properties
After
Before
0
3,500
7,000
10,500
1" = 3,500 Feet
N
S
E
W
8535 255TH AVE NE
64
8407 255TH AVE NE
NE REDMOND-FALL CITY RD
SAHALEE WAY NE
2416 244TH PL NE
5
2403 245TH PL NE
1715 E LK SAMM PKWY NE
1911 236TH AVE NE
71
1560 E LK SAMM PKWY NE
48
23530 NE 17TH PL
228TH AVE NE
REDMOND-FALL CITY RD NE
10
25855 NE 4TH PL
25625 E PLATEAU DR
21838 SE 1ST ST
15
21827 SE 1ST ST
19818 SE 8TH ST
18
19824 SE 8TH ST
REDMOND-FALL CITY RD SE
1101 270TH PL SE
45
1502 235TH AVE SE
1630 235TH AVE SE
59
58
21326 SE 13TH PL
21520 SE 13TH PL
1927 249TH PL SE
47
1103 272ND PL SE
2002 249TH PL SE
46
SE REDMOND-FALL CITY RD
19640 SE 29TH ST
22
2206 SE 22ND WAY
27187 SE 27TH ST
19632 SE 29TH ST
27
2830 E BEAVER LAKE DR SE
3606 212TH PL SE
60
25704 SE 31ST PL
57
3605 212TH PL SE
4051 PROVIDENCE POINT DR SE
32
24303 SE 37TH PL
24207 SE 37TH PL
4222 221ST PL SE
55
4634 238TH WAY SE
4652 238TH WAY SE
NW MAPLE ST
NEWPORT WAY NW
NEWPORT WAY NW

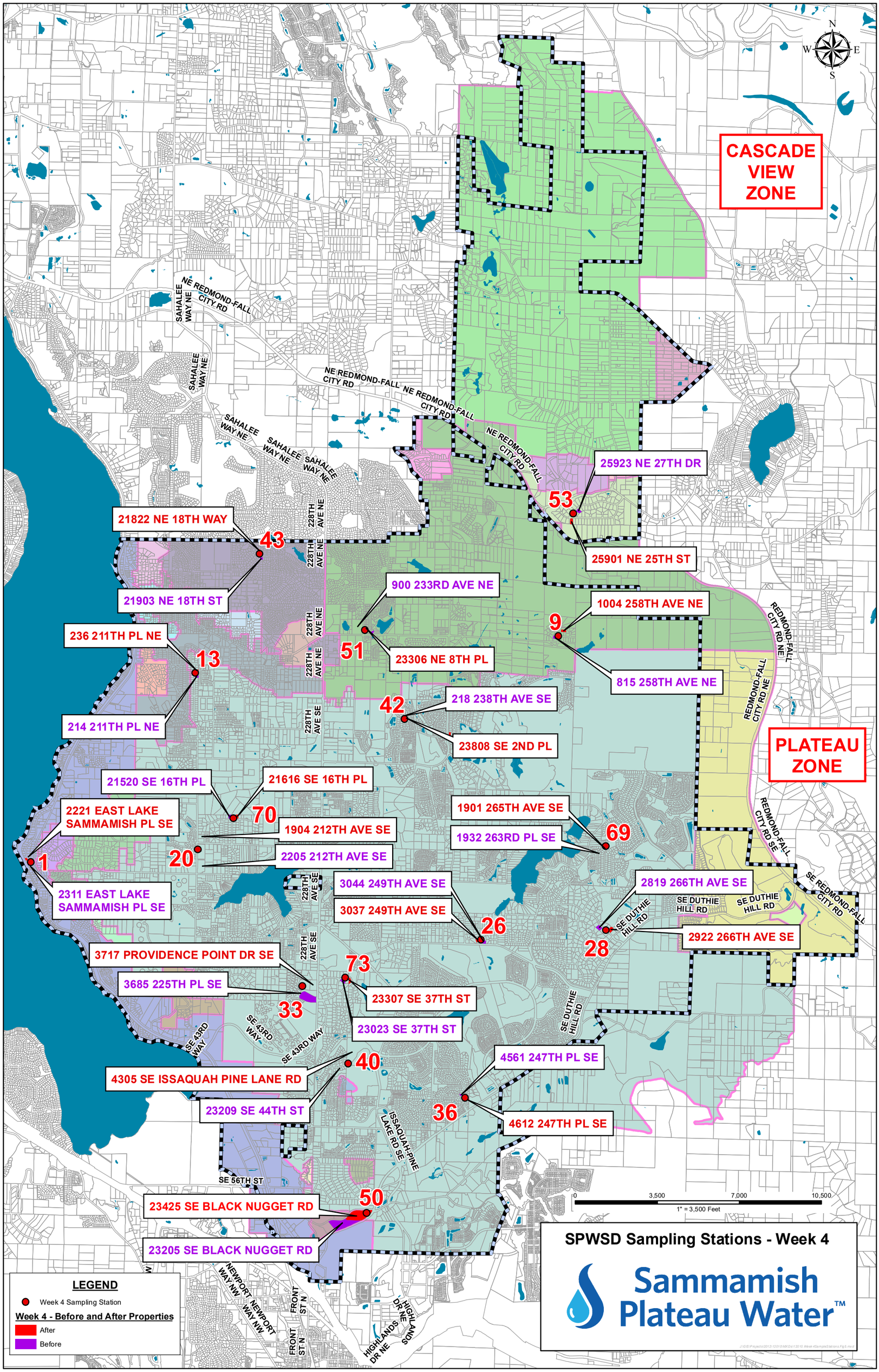
CASCADE VIEW ZONE
PLATEAU ZONE
N
S
E
W
NE REDMOND-FALL CITY RD
SAHALEE WAY NE
228TH AVE NE
228TH AVE SE
REDMOND-FALL CITY RD NE
REDMOND-FALL CITY RD SE
SE REDMOND-FALL CITY RD
SE DUTHIE HILL RD
SE 43RD WAY
ISSAQUAH-PINE LAKE RD SE
SE 56TH ST
NEWPORT WAY NW
FRONT ST N
HIGHLANDS DR NE
25923 NE 27TH DR
53
25901 NE 25TH ST
21822 NE 18TH WAY
43
21903 NE 18TH ST
900 233RD AVE NE
51
23306 NE 8TH PL
1004 258TH AVE NE
9
815 258TH AVE NE
236 211TH PL NE
13
214 211TH PL NE
218 238TH AVE SE
42
23808 SE 2ND PL
21520 SE 16TH PL
21616 SE 16TH PL
70
1904 212TH AVE SE
2221 EAST LAKE SAMMAMISH PL SE
1
2311 EAST LAKE SAMMAMISH PL SE
20
2205 212TH AVE SE
1901 265TH AVE SE
1932 263RD PL SE
69
2819 266TH AVE SE
2922 266TH AVE SE
28
3044 249TH AVE SE
3037 249TH AVE SE
26
3717 PROVIDENCE POINT DR SE
3685 225TH PL SE
33
73
23307 SE 37TH ST
23023 SE 37TH ST
4305 SE ISSAQUAH PINE LANE RD
40
23209 SE 44TH ST
4561 247TH PL SE
36
4612 247TH PL SE
23425 SE BLACK NUGGET RD
50
23205 SE BLACK NUGGET RD
0
3,500
7,000
10,500
1" = 3,500 Feet
LEGEND
Week 4 Sampling Station
Week 4 - Before and After Properties
After
Before
SPWSD Sampling Stations - Week 4
Sammamish Plateau Water™

J. Additional information

- Seattle Public Utilities Water Quality Laboratory Routine Sampling Record (Week 1 shown as an example.)
- Sammamish Plateau Water Boil Water Advisory Notice

This page intentionally left blank.

Seattle Public Utilities

CHAIN OF CUSTODY RECORD
Microbiology

Week 1

SEATTLE PUBLIC UTILITIES

Water Quality Laboratory
800 S. Stacy St. Seattle, WA 98134

DATE
Phone: (206) 684-7834 FAX: (206) 684-4133

Name: Sammamish Plateau WSD
Address: 1510 228th Ave SE
Sammamish WA 98075
Telephone: 425-392-6256
Fax: 425-391-5389

PWS ID # 40900
Source # ___

Repeat ☐ New Main ☐
Routine ☒ Main Break ☐
Other ☐ Cust. Call ☐

Submitter: Signature(s):

Sample Date	Sample Time	Sampler	Location	Lab Sample #	Field Data: Field Chlorine	Field Data: Field Temperature	Field Data: Other	Testing Parameters (Check requested tests): P/A	MPN	FC	HPC	Other	Results: Total Coliform/ E. Coli: Presence/ Absence	Total Coliform/ E. Coli: Most Probable Number (MPN)	Fecal Coliform (CFU/100mL)	Heterotrophic Plate Count (CFU/ml)	Other
			SPWSD-**3** 25920 NE 29TH PL					X									
			SPWSD-**6** 1639 209TH PL NE					X									
			SPWSD-**7** 22202 NE 12TH PL					X									
			SPWSD-**11** 407 238TH AVE NE					X									
			SPWSD-**21** 19605 SE 23RD ST					X									
			SPWSD-**25** 25005 SE 24TH ST					X									
			SPWSD-**29** 2214 275TH CT SE					X									
			SPWSD-**34** 4210 244TH PL SE					X									
			SPWSD-**37** 4708 227TH PL SE					X									
			SPWSD-**38** 5408 248TH PL SE					X									

COMMENTS:

Total # of containers: _____
Travel Temp: ___ C °

Relinquished by:			Received by:		
(signature)	*(printed name)*	Date/Time	*(signature)*	*(printed name)*	Date/Time

TC- Total Coliform
EC- E. Coli
FC- Fecal Coliform
HPC- Heterotrophic Plate
P/A- Presence/Absence
MPN- Most Probable Number

Faxed ☐
E-mail ☐
Results sent by:
Date/Time:

Seattle Public Utilities

CHAIN OF CUSTODY RECORD
Microbiology

Week 1

SEATTLE PUBLIC UTILITIES

Water Quality Laboratory
800 S. Stacy St. Seattle, WA 98134

Phone: (206) 684-7834 FAX: (206) 684-4133

DATE

Name: Sammamish Plateau WSD
Address: 1510 228th Ave SE
Sammamish WA 98075
Telephone: 425-392-6256
Fax: 425-391-5389

PWS ID # 40900
Source # ___

Repeat ☐ New Main ☐
Routine ☒ Main Break ☐
Other ☐ Cust. Call ☐

Submitter: Signature(s):

Sample Date	Sample Time	Sampler	Location	Lab Sample #	Field Data: Field Chlorine	Field Data: Field Temperature	Field Data: Other	Testing Parameters (Check requested tests): P/A	MPN	FC	HPC	Other	Results: Total Coliform/ E. Coli: Presence/ Absence	Total Coliform/ E. Coli: Most Probable Number (MPN)	Fecal Coliform (CFU/100mL)	Heterotrophic Plate Count (CFU/ml)	Other
			SPWSD-**39** 22664 SE 58TH AVE					X									
			SPWSD-**44** 214TH AVE SE & SE 5TH PL					X									
			SPWSD-**54** 1434 241ST PL SE					X									
			SPWSD-**56** 2637 231ST PL SE					X									
			SPWSD-**65** 4014 251ST PL SE					X									
			SPWSD-**66** 3416 221ST AVE SE					X									
			SPWSD-**77** 609 216TH AVE SE					X									
								X									
								X									
								X									

COMMENTS:

Total # of containers: _____
Travel Temp: ___ C °

Relinquished by:			Received by:		
(signature)	(printed name)	Date/Time	(signature)	(printed name)	Date/Time

TC- Total Coliform
EC- E. Coli
FC- Fecal Coliform
HPC- Heterotrophic Plate
P/A- Presence/Absence
MPN- Most Probable Number

Faxed ☐
E-mail ☐
Results sent by:
Date/Time:

BOIL WATER ADVISORY NOTICE

Date: _____

Contact: _____

Sammamish Plateau Water

BOIL YOUR WATER BEFORE USING!

WHAT HAPPENED? The staff at the Sammamish Plateau Water and Sewer District (state water system ID #409009) takes water samples from 70 sampling stations located throughout the service area. We took water samples on [insert date], and on [insert date] we received a test result from a water sample that showed fecal coliform bacteria, or *E. coli* in the water. We took follow up samples on [insert date) as required by the Washington Department of Health, and the test results on (insert date) still showed the bacteria in the water.

WHAT SHOULD YOU DO? DO NOT DRINK THE WATER WITHOUT BOILING IT FIRST. Bring all water to a full boil, let it boil for one minute, and let it cool before using, or use bottled water. Boiled or bottled water should be used for drinking, making ice, brushing teeth, washing dishes, and food preparation **until further notice**. Boiling kills bacteria and other organisms in the water.

Fecal coliforms and E. coli are bacteria whose presence indicates that the water may be contaminated with human or animal wastes. Microbes in these wastes can cause diarrhea, cramps, nausea, headaches, or other symptoms. They may pose a special health risk for infants, young children, and people with severely compromised immune systems. These bacteria can make you sick, especially for people with weakened immune systems. If you experience any of these symptoms and they persist, you may want to seek medical advice. People at increased risk should seek advice about drinking water from their health care providers.

WHAT CAUSED THE PROBLEM? We do not know the cause of the contamination at this time. [or identify cause if known.] Bacterial contamination can occur when increased runoff enters the drinking water source, for example, following heavy rains. It can also happen due to a break in the distribution system lines, damage during construction, a faulty backflow assembly or an issue during the water treatment process, among others.

WHAT IS THE DISTRICT DOING TO RESOLVE THE PROBLEM? We have flushed our water system and added additional chlorine to clear out the bacteria. We have increased the number of water samples as required by Department of Health regulations. [add any additional treatment information here.] We will inform you when tests are clear of bacteria and you no longer need to boil your water. We anticipate resolving the problem by [add estimated time frame].

For more information, please contact our Customer Service Department at (425) 392-6256 or visit our website at www.spwater.org**.** General guidelines on ways to lessen the risk of infection by microbes are available from the EPA Safe Drinking Water Hotline at (800) 426-4791.

Boil your water before using.

將水煮開後才使用。

Chinese

Haga hervir el agua antes de usarla.

Spanish

पानी इसतेमाल करने से पहिले उबाल लें।

Hindi

水は使用する前に煮沸してください。

Japanese

사용하기 전에 물을 끓이십시오.

Korean

Pakuluin ang inyong tubig bago gagamitin.

Tagalog (Filipino)

Please share this information with all the other people who drink this water, especially those who may not have received this notice directly (for example, people in apartments, nursing homes, schools, and businesses). You can do this by posting this notice in a public place or distributing copies by hand or mail.

Sammamish Plateau Water and Sewer District Triggered Ground Water Monitoring Plan

Revised 9/20/2017

1.0 INTRODUCTION AND OBJECTIVES

The United State Environmental Protection Agency (EPA) developed the Ground Water Rule (GWR) to increase protection for consumers of public drinking water systems that rely on ground water sources. The GWR ensures that these systems take corrective actions to eliminate sources of contamination or to remove or inactivate pathogens from drinking water sources. The major components of the GWR are:

- Periodic sanitary surveys of ground water systems addressing eight specific sanitary survey elements to evaluate the system for the presence of significant deficiencies.
- Source water monitoring either through triggered monitoring or State-directed assessment monitoring to test for the presence of one of three fecal indicators (in Washington State, the indicator is *E. coli*).
- Requirements to correct significant deficiencies and eliminate or treat for fecal contamination through specific corrective actions.
- Compliance monitoring to ensure that treatment technologies installed to treat drinking water reliably achieve at least 4-log treatment of viruses via inactivation, removal, or a combination of these.

The GWR requires ground water systems that provide less than 4-log removal or inactivation of viruses, or do not conduct compliance monitoring of treatment to demonstrate disinfection performance, to conduct monitoring for the presence of a fecal indicator at the source when total coliform bacteria are detected in the distribution system. Triggered monitoring is designed to allow systems and States to identify and correct any public health risks from fecal contamination found at the source.

This Triggered Ground Water Monitoring Plan (Plan) has been developed by Sammamish Plateau Water and Sewer District (District) to conduct triggered monitoring in a manner that meets the GWR requirements. This Plan establishes what sources will be monitored in response to notification that a positive coliform sample has occurred, and when consumers and consecutive or wholesale systems need to be notified. This Plan was revised in 2017 in conjunction with the revisions of the District's Coliform Monitoring Plan to meet the requirements of the Revised Total Coliform Rule (RTCR), updated by the U.S Environmental Protection Agency (EPA) and the Washington Department of Health in 2016.

2.0 APPROACH

As a water system with multiple ground water sources as well as surface water supplies, the District evaluated which GWR compliance strategy would work best: compliance monitoring or triggered monitoring. The District estimated the contact time obtained prior to the first customer's service connection, and reviewed this information and the logistics associated with meeting compliance

monitoring requirements. After review, the District determined that the optimal GWR compliance path is to plan to conduct triggered monitoring at representative sources when total coliform is found in bacterial samples collected under the Revised Total Coliform Rule (RTCR) promulgated by the Washington Department of Health in April 2016. The District's Coliform Monitoring Plan, documenting monthly monitoring in compliance with the RTCR, was updated in September 2017 to include the revisions.

This Plan details the District's representative, triggered monitoring approach. EPA regulations and guidelines, including the *Ground Water Rule Triggered and Representative Source Water Monitoring Guidance Manual* (2009) were used to develop this Plan.

3.0 SYSTEM INFORMATION

The District is located in King County, Washington. This special purpose district public water supply system serves 63,148 customers (as of December 2016) via ground water sources and interties with regional and adjacent purveyors. Table 1 lists each of the District's sources, type of use, treatment, and capacity, as presented in the 2016 Water Facilities Inventory. The District also has two interties with Northeast Sammamish Sewer and Water District, which is also a groundwater purveyor, and multiple emergency connections with adjacent water suppliers. The District has two interties with Cascade Water Alliance (North and South connections) that provide regional surface water from Seattle Public Utilities. Information on these connections is included in Table 2.

Table 1. The District's Sources of Supply and Treatment

Groundwater Supply Source	Type	Treatment	Capacity (gpm)
Well 1R	Permanent	Corrosion Control, Fluoridation, Chlorination	500
Well 2.1	Permanent	Mn Filtration, Corrosion Control, Fluoridation, Chlorination	300
Well #2.2	Permanent	Mn Filtration, Corrosion Control, Fluoridation, Chlorination	500
Well #4R	Permanent	Mn Filtration, Ferric Chloride, Fluoridation[1], Chlorination	1450/1800
Well #7	Permanent	Corrosion Control, Fluoridation, Chlorination	2,000
Well #8	Permanent	Corrosion Control, Fluoridation, Chlorination	3,200
Well #9	Seasonal	Corrosion Control, Fluoridation, Chlorination	2,200
Well #10	Permanent	Corrosion Control, Fluoridation, Chlorination	500
Well #11.1	Permanent	Mn Filtration, Ferric Chloride, Fluoridation[1], Chlorination	389

Well #11.2	Permanent	Mn Filtration, Ferric Chloride, Fluoridation[1], Chlorination	1,450/1,600
Well #12R	Permanent	Mn Filtration, Fluoridation, Chlorination	200
Well #13R	Permanent	Mn Filtration, Fluoridation, Chlorination	260

[1]No fluoride reaches the 500 or 700 Pressure Zones

Table 2. Interties and Regional Supply Connections to the District's Distribution System

Utility	Number of Connections	Does the District Provide and/or Receive Water?	Plateau or Cascade View Zone?	Reaches These Pressure Zones[1]	Most Likely Receives Water From…
Permanent Connections					
Cascade Water Alliance – North Regional Connection	1	Receiving	Cascade View	730 Zone	Surface water wheeled through City of Redmond system in Redmond Ridge
Cascade Water Alliance – South Regional Connection	1	Receiving	Plateau	297 Zone	Surface water wheeled through Bellevue-Issaquah Pipeline in Issaquah (surface water)
N.E. Sammamish Sewer and Water District	1	Either way	Plateau	700 Zone	Ground water wells
Emergency Connections					
N.E. Sammamish Sewer and Water District	1	Either way	Plateau	297 Zone	Ground water wells
N.E. Sammamish Sewer and Water District	3	Either way	Plateau	700 Zone	Ground water wells
Ames Lake Water Association	1	Providing	Cascade View	730 Zone	Ground water wells
Union Hill Water Association	2	Providing	Cascade View	730 Zone	Ground water wells

Utility	Number of Connections	Does the District Provide and/or Receive Water?	Plateau or Cascade View Zone?	Reaches These Pressure Zones[1]	Most Likely Receives Water From…
Issaquah	2	Either way	Plateau	297 Zone	Surface and well water

[1] From 2010 Draft Water System Plan, Table 6-5.
Note: Shading of rows denotes interties to surface only water supplies.

As shown in Table 1, the District provides some disinfection for each ground water source. While some sources may meet the criteria for conducting compliance monitoring, the District has determined that conducting representative, triggered monitoring was the best option for the District for compliance with the GWR.

For GWR compliance, the District will need to work with suppliers that provide ground water and consecutive systems receiving water from the District's ground water sources. As shown in Table 2, during typical operations, the District receives ground water from the Northeast Sammamish Sewer and Water District and provides ground water to the same system. Additionally, the District will need to take into account any active emergency connections when conducting triggered source water monitoring. Table 2 shows that Cascade Water Alliance connections provide only surface water to the District. During conversations with Seattle Public Utilities (SPU) about their Riverton Heights well field, both parties determined that there is no possibility of that well water getting into the District's distribution system through the Cascade Water Alliance connections.

3.1 Hydraulically Separate Zones

The District's distribution system is separated into two hydraulically separate zones, the Plateau Zone and Cascade View Zone.

Plateau Zone: As of 2016, this zone served nearly 61,105 people at about 17,498 service connections. There are six storage tanks present: 3.0 MG Tank, 2 MG Tank, two 4 MG tanks, 7.0 MG Tank, and 2.25 MG Tank. The Plateau Zone is divided into five major pressure zones that include several smaller zones created to serve areas with variable topography. Additionally, 5 booster pump stations and 41 pressure-reducing valves serve this area.

Cascade View Zone: As of 2016, this zone served about 2,043 people at about 705 service connections. Two storage tanks are in use: 600,000-gallon tank and 275,000-gallon tank. The Cascade View Zone is divided into three primary pressure zones and two smaller zones. Additionally, two booster pump stations and five pressure-reducing valves serve this area.

4.0 REPRESENTATIVE MONITORING

This section of the Plan establishes which sources will be considered representative of each RTCR monitoring location. Conducting representative monitoring allows the District to reduce the number of

samples collected for triggered monitoring. Additionally, this can minimize notification of other systems under GWR requirements.

4.1 Basic Requirements

These are the basic requirements for conducting representative triggered monitoring under the GWR:

- The plan outlining representative sources must be submitted and approved by DOH prior to implementation.
- Systems can reduce the number of sampling sites by:
    - Establishing which sources provide water to each RTCR sampling location (and to consecutive systems). As a result, when the system obtains a positive RTCR sample, the District would collect triggered monitoring samples only at the sources which provide water to the RTCR sampling site as described in the DOH-approved plan and which were in use during sampling. This same concept would be applied to connections to consecutive systems. If a consecutive system obtains a positive RTCR sample, the system would be required to monitor only those sources that provide water to the consecutive system and were operating when the sample was collected, instead of collecting samples at each source.
    - Determining that one or more wells represent multiple wells in the same hydrogeological setting. As a result, when the system obtains a positive RTCR sample, triggered monitoring samples would be collected only at wells representing different hydrogeological conditions, instead of collecting samples at each well source.

4.2 The District's Ground Water Sources Representing Coliform Monitoring Locations

With respect to developing this Plan, the District has determined that monitoring efforts would be most efficient if representative monitoring is used. To determine which sources to monitor at each coliform site, the following were considered:

- Map of the distribution system indicating points of entry and RTCR sampling sites
- Source types, level of treatment for each source (at the point of entry), type of supply (permanent, seasonal, emergency, etc.)
- Connections to other systems, indicating whether these feed water to other systems, accept water from other systems, or both
- Data linking RTCR monitoring locations to particular ground water sources (hydraulic, operational, water quality, etc.)
- Data linking connections to consecutive systems to particular ground water sources (hydraulic, operational, water quality, hydraulic model, etc.)

An analysis of movement of water through the District's drinking water supply system and operational flexibility has indicated that it is necessary to assume that water from each of the sources can move throughout many areas of the operating zone it supplies. However, as described above, the Cascade View and Plateau Zones are not connected hydraulically. Therefore, sources serving the Cascade View Zone will be monitored, and the District response to positive coliform samples in the Cascade View Zone distribution system will be conducted per GWR requirements for that zone. Additionally, sources serving

the Plateau Zone will be monitored, and the District response to positive coliform samples in the Plateau Zone distribution system will be conducted per GWR requirements for that specific zone. This will also be true with respect to wholesale and consecutive systems. The District will only issue public notifications to residents with systems linked to the operating zone serving the RTCR site that exhibit a positive coliform sample. Table 3 in Section 4.4 provides details.

4.3 The District's Wells Representing Other Wells in the Same Hydrogeological Setting

The following information was considered by the District and others to determine if a few of the District's sources could be combined according to hydrogeological properties:

- Well locations including proximity to other wells.
- Well construction details for each well, including depth, grouting, sanitary seal, and screened intervals.
- Water chemistry analysis results demonstrating similarities or differences among wells or vulnerability of wells to contamination.
- Aquifer information and other hydrogeological studies, as appropriate.

The following wells were identified as being in the same hydrogeological setting:

- Wells 2.1 and 2.2, which have been designated as a wellfield (S18) by DOH. In the technical review of these wells, the following were found (CDM, 2004):
    - Wells 2.1 and 2.2 meet requirements for DOH wellfield designation.
    - The wells share a water right certificate and meet requirements pertaining to construction or replacement of wells.
    - 24-hour pumping test data indicate that Wells 2.1 and 2.2 are hydraulically connected.
    - With the exception of manganese, water quality data indicate a relative homogeneity of water quality constituents in samples drawn from each well.

This GWR Plan treats Wells 2.1 and 2.2 as a single source. When the system experiences a positive RTCR sample in the Plateau Zone of their system, one sample will be collected to represent Wells 2.1 and 2.2 before treatment. It should be noted, however, that if a significant deficiency is found, it is probable that all wells within a designated wellfield will require treatment/corrective action.

4.4 Identification of Which Sources Contribute to Each RTCR Site

Table 3 details the sources that serve each RTCR site.

Table 3. Sources of Supply Associated with the RTCR

Source of Supply	RTCR Sampling Sites Served by Source	Operating Zone
Well Sources		
Well 1 (SO1), Wells 2.1 and 2.2 (S18), Well 4 (S17), Well 7 (S06), Well 8 (S07), Well 9 (S13), Well 10 (S11), Well 11.1 (S14), Well 11.2 (S12)	1, 4, 5, 6, 7, 8, 9, 10, 11, 12,13, 14, 15, 17, 18, 19, 20, 21, 22, 23, 24, 25, 26, 27, 28, 29, 30, 32, 33, 34, 35, 36, 37, 38, 39, 40, 41, 42, 43, 44, 45, 46, 47, 48, 49, 50, 51, 52, 54, 55, 56, 57, 58, 59, 60, 65, 66, 67, 68, 69, 70, 71, 72, 73	Plateau Zone
Well 12 (S16), Well 13 (S24)	2, 3, 53, 64	Cascade View Zone
Ground Water Interties		
N.E. Sammamish Sewer and Water District[1]	1, 4, 5, 6, 7, 8, 9, 10, 11, 12,13, 14, 15, 17, 18, 19, 20, 21, 22, 23, 24, 25, 26, 27, 28, 29, 30, 32, 33, 34, 35, 36, 37, 38, 39, 40, 41, 42, 43, 44, 45, 46, 47, 48, 49, 50, 51, 52, 54, 55, 56, 57, 58, 59, 60, 65, 66, 67, 68, 69, 70, 71, 72, 73	Plateau Zone
Surface Water Supply Sources		
Cascade Water Alliance – North Regional Connection (wheeled through City of Redmond system)	2, 3, 53, 64	Cascade View Zone
Cascade Water Alliance – South Regional Connection	1, 4, 5, 6, 7, 8, 9, 10, 11, 12,13, 14, 15, 17, 18, 19, 20, 21, 22, 23, 24, 25, 26, 27, 28, 29, 30, 32, 33, 34, 35, 36, 37, 38, 39, 40, 41, 42, 43, 44, 45, 46, 47, 48, 49, 50, 51, 52, 54, 55, 56, 57, 58, 59, 60, 65, 66, 67, 68, 69, 70, 71, 72, 73	Plateau Zone
Emergency Interties		
N.E. Sammamish Sewer and Water District[1]	1, 4, 5, 6, 7, 8, 9, 10, 11, 12,13, 14, 15, 17, 18, 19, 20, 21, 22, 23, 24, 25, 26, 27, 28, 29, 30, 32, 33, 34, 35, 36, 37, 38, 39, 40, 41, 42, 43, 44, 45, 46, 47, 48, 49, 50, 51, 52, 54, 55, 56, 57, 58, 59, 60, 65, 66, 67, 68, 69, 70, 71, 72, 73	Plateau Zone
Ames Lake Water Association[2]	2, 3, 53, 64	Cascade View Zone
Union Hill Water Association[2]	2, 3, 53, 64	Cascade View Zone
City of Issaquah[1]	1, 4, 5, 6, 7, 8, 9, 10, 11, 12,13, 14, 15, 17, 18, 19, 20, 21, 22, 23, 24, 25, 26, 27, 28, 29, 30, 32, 33, 34, 35, 36, 37, 38, 39, 40, 41, 42, 43, 44, 45, 46, 47, 48, 49, 50, 51, 52, 54, 55, 56, 57, 58, 59, 60, 65, 66, 67, 68, 69, 70, 71, 72, 73	Plateau Zone

[1] Provides water to and receives water from the District.
[2] Receives water from the District.

5.0 TRIGGERED GROUND WATER MONITORING

This section of the plan details the District's implementation of triggered monitoring as required by the GWR.

5.1 Basic Requirements

These are the basic requirements for triggered monitoring in the GWR:

- Within 24 hours of notification of a positive RTCR sample by the laboratory, the District must collect a source water sample at each representative source that was in operation when the RTCR sample was collected.
- In Washington State, source water triggered monitoring samples are collected to test for the presence of *E. coli*.
- Samples must be collected at each source (assuming the source is accessible) prior to treatment. The District will collect samples at sample taps that have been installed at each source prior to treatment for triggered sample collection.
- The District must conduct triggered monitoring in response to notification of positive RTCR samples within the distribution system of consecutive systems served by the District.

5.2 RTCR Sample Invalidation

It is possible for DOH to invalidate RTCR sample results or *E. coli* samples on a case-by-case basis. The District may be interested in this option if it appears clear to the District that, for example, the positive RTCR result was caused by distribution system conditions. However, it is important to note that the 24-hour deadline does not leave much time for invalidation to occur prior to collecting triggered monitoring samples. The District will most likely need to plan to conduct triggered sampling and other actions regardless of an appearance that the sample result was not caused by source water conditions.

5.3 Follow-up if a triggered monitoring sample tests positive for the presence of *E. coli*

The following actions will be implemented if the District receives a triggered monitoring sample that tests positive for *E. coli*:

- As determined by DOH, the District will be required to implement corrective action or to collect three additional samples at each source that sampled positive for *E. coli* (or as described in the Representative Triggered Monitoring Plan) within 24 hours of positive *E. coli* sample.
- The District must issue a Tier 1 Public Notice to customers within 24 hours.
- The District must notify DOH within 24 hours.
- The District must include a special notice in their next Consumer Confidence (Water Quality) Report.

5.4 Interaction with Wholesale Suppliers

Because the District both provides water to and receives water from Northeast Sammamish Sewer and Water District (NESSWD) during typical operations due to a shared tank, the District will need to coordinate with that supply system:

- The District will be required to report a positive RTCR sample to NESSWD within 24 hours of being notified of the positive sample by the water quality laboratory.
- If the District is notified by NESSWD that additional source water monitoring results are *E. coli* positive, the District must:
    - Notify SPWSD customers with a Tier 1 Public Notice within 24 hours.
    - Notify SPWSD customers with a special notice in the next Consumer Confidence Report.
    - Consult with DOH and follow their recommended corrective actions.

Additionally, if an emergency intertie is online and the District is receiving ground water from another system during RTCR sampling, that system will also be notified. See Table 3 for details on emergency interties.

5.4.1 Wholesale Suppliers Contact Information

The District may need to contact these utilities if they detect coliform in their system. This depends on where the positive sample was collected (detailed below) and what connections are active:

Northeast Sammamish Sewer and Water District: 425-868-1144 (24 hours per day)

City of Issaquah: 425-837-3470 (normal business hours); 425-837-3200 (after business hours)

Cascade Water Alliance: (425) 493-0930

Seattle Public Utilities (206) 386-1800 (24-hour emergency number)

City of Redmond Water Operations (425) 556-2800 (24-hour emergency number)

Union Hill Water Association (425) 497-1812 (24-hour emergency number)

Ames Lake Water Association (425) 222-7003 (24-hour emergency number)

5.5 Interaction with Consecutive Systems

Because the District provides ground water to Northeast Sammamish Sewer and Water District during typical operations, the District will be notified by this system if they observe a positive RTCR sample. In response, the District will need to:

- Sample all of the supply sources that were in operation on the date the positive RTCR sample(s) was collected. As shown in Table 3, the connections with these systems are through the Plateau operating zone. The District will need to conduct triggered monitoring only at operating sources serving the Plateau zone (also shown in Table 3).
- If results of triggered source water monitoring are positive for the presence of *E. coli*, the District must:

- Notify all consecutive systems served by source(s) testing positive for *E. coli* within 24 hours of the sample result.
- Notify DOH, and if not required to take corrective action, collect three additional source water samples within 24 hours.
- Notify the public with a Tier 1 Public Notice within 24 hours.
- The District must notify the public with a special notice in the next Consumer Confidence Report.

Additionally, if the District receives notification of a positive coliform sample experienced by a system served by an active emergency intertie, the District will conduct sampling of sources serving the operating zone that is connected to the emergency intertie (see Table 3).

5.6 The District's Triggered Monitoring Plan

Table 4 provides details for triggered monitoring the District will need to conduct in response to a positive RTCR sample.

Table 4. GWR Triggered Monitoring Details

RTCR site	Operating Zone	Conduct Triggered Monitoring at these Sources….	Consecutive/Wholesale System Involved
1 2308 E Lk Samm Pl SE	Plateau	Well 1 (SO1), Well 2.1/2.2 (S18), Well 4 (S17), Well 7 (S06), Well 8 (S07), Well 9 (S13), Well 10 (S11), Well 11.1 (S14), Well 11.2 (S12), CWA South Intertie (S19)	N.E. Sammamish Sewer and Water District *Emergency: N.E. Sammamish Sewer and Water District, Issaquah, CWA South Intertie*
2 5524 264th Ave NE	Cascade View	Well 12 (S16), Well 13 (S24), CWA North Intertie (S19)	*Emergency: Union Hill Water Association, Ames Lake Water Association, CWA North Intertie, Redmond*
3 25920 NE 29th Pl	Cascade View	Well 12 (S16), Well 13 (S24), CWA North Intertie (S19)	*Emergency: Union Hill Water Association, Ames Lake Water Association, CWA North Intertie, Redmond*
4 24010 NE 30th Pl	Plateau	Well 1 (SO1), Well 2.1/2.2 (S18), Well 4 (S17), Well 7 (S06), Well 8 (S07), Well 9 (S13), Well 10 (S11), Well 11.1 (S14), Well 11.2 (S12), CWA South Intertie (S19)	N.E. Sammamish Sewer and Water District *Emergency: N.E. Sammamish Sewer and Water District, Issaquah, CWA South Intertie*

RTCR site	Operating Zone	Conduct Triggered Monitoring at these Sources….	Consecutive/Wholesale System Involved
5 2404 NE 244th Pl	Plateau	Well 1 (SO1), Well 2.1/2.2 (S18), Well 4 (S17), Well 7 (S06), Well 8 (S07), Well 9 (S13), Well 10 (S11), Well 11.1 (S14), Well 11.2 (S12), CWA South Intertie (S19)	N.E. Sammamish Sewer and Water District *Emergency: N.E. Sammamish Sewer and Water District, Issaquah, CWA South Intertie*
6 1639 209th Pl NE	Plateau	Well 1 (SO1), Well 2.1/2.2 (S18), Well 4 (S17), Well 7 (S06), Well 8 (S07), Well 9 (S13), Well 10 (S11), Well 11.1 (S14), Well 11.2 (S12), CWA South Intertie (S19)	N.E. Sammamish Sewer and Water District *Emergency: N.E. Sammamish Sewer and Water District, Issaquah, CWA South Intertie*
7 22202 NE 12th Pl	Plateau	Well 1 (SO1), Well 2.1/2.2 (S18), Well 4 (S17), Well 7 (S06), Well 8 (S07), Well 9 (S13), Well 10 (S11), Well 11.1 (S14), Well 11.2 (S12), CWA South Intertie (S19)	N.E. Sammamish Sewer and Water District *Emergency: N.E. Sammamish Sewer and Water District, Issaquah, CWA South Intertie*
8 1806 229th Ave NE	Plateau	Well 1 (SO1), Well 2.1/2.2 (S18), Well 4 (S17), Well 7 (S06), Well 8 (S07), Well 9 (S13), Well 10 (S11), Well 11.1 (S14), Well 11.2 (S12), CWA South Intertie (S19)	N.E. Sammamish Sewer and Water District *Emergency: N.E. Sammamish Sewer and Water District, Issaquah, CWA South Intertie*
9 823 258th Ave NE	Plateau	Well 1 (SO1), Well 2.1/2.2 (S18), Well 4 (S17), Well 7 (S06), Well 8 (S07), Well 9 (S13), Well 10 (S11), Well 11.1 (S14), Well 11.2 (S12), CWA South Intertie (S19)	N.E. Sammamish Sewer and Water District *Emergency: N.E. Sammamish Sewer and Water District, Issaquah, CWA South Intertie*
10 2575 E. Plateau Dr. SE	Plateau	Well 1 (SO1), Well 2.1/2.2 (S18), Well 4 (S17), Well 7 (S06), Well 8 (S07), Well 9 (S13), Well 10 (S11), Well 11.1 (S14), Well 11.2 (S12), CWA South Intertie (S19)	N.E. Sammamish Sewer and Water District *Emergency: N.E. Sammamish Sewer and Water District, Issaquah, CWA South Intertie*
11 407 238th Ave NE	Plateau	Well 1 (SO1), Well 2.1/2.2 (S18), Well 4 (S17), Well 7 (S06), Well 8 (S07), Well 9 (S13), Well 10 (S11), Well 11.1 (S14), Well 11.2 (S12), CWA South Intertie (S19)	N.E. Sammamish Sewer and Water District *Emergency: N.E. Sammamish Sewer and Water District, Issaquah, CWA South Intertie*

RTCR site	Operating Zone	Conduct Triggered Monitoring at these Sources….	Consecutive/Wholesale System Involved
12 410 228th Ave NE	Plateau	Well 1 (SO1), Well 2.1/2.2 (S18), Well 4 (S17), Well 7 (S06), Well 8 (S07), Well 9 (S13), Well 10 (S11), Well 11.1 (S14), Well 11.2 (S12), CWA South Intertie (S19)	N.E. Sammamish Sewer and Water District *Emergency: N.E. Sammamish Sewer and Water District, Issaquah, CWA South Intertie*
13 230 211th Pl NE	Plateau	Well 1 (SO1), Well 2.1/2.2 (S18), Well 4 (S17), Well 7 (S06), Well 8 (S07), Well 9 (S13), Well 10 (S11), Well 11.1 (S14), Well 11.2 (S12), CWA South Intertie (S19)	N.E. Sammamish Sewer and Water District *Emergency: N.E. Sammamish Sewer and Water District, Issaquah, CWA South Intertie*
14 20928 SE 3rd Way	Plateau	Well 1 (SO1), Well 2.1/2.2 (S18), Well 4 (S17), Well 7 (S06), Well 8 (S07), Well 9 (S13), Well 10 (S11), Well 11.1 (S14), Well 11.2 (S12), CWA South Intertie (S19)	N.E. Sammamish Sewer and Water District *Emergency: N.E. Sammamish Sewer and Water District, Issaquah, CWA South Intertie*
15 21828 SE 1st St	Plateau	Well 1 (SO1), Well 2.1/2.2 (S18), Well 4 (S17), Well 7 (S06), Well 8 (S07), Well 9 (S13), Well 10 (S11), Well 11.1 (S14), Well 11.2 (S12), CWA South Intertie (S19)	N.E. Sammamish Sewer and Water District *Emergency: N.E. Sammamish Sewer and Water District, Issaquah, CWA South Intertie*
16 Sample Station not assigned at this time			
17 24415 SE 4th Pl	Plateau	Well 1 (SO1), Well 2.1/2.2 (S18), Well 4 (S17), Well 7 (S06), Well 8 (S07), Well 9 (S13), Well 10 (S11), Well 11.1 (S14), Well 11.2 (S12), CWA South Intertie (S19)	N.E. Sammamish Sewer and Water District *Emergency: N.E. Sammamish Sewer and Water District, Issaquah, CWA South Intertie*
18 19820 SE 8th St	Plateau	Well 1 (SO1), Well 2.1/2.2 (S18), Well 4 (S17), Well 7 (S06), Well 8 (S07), Well 9 (S13), Well 10 (S11), Well 11.1 (S14), Well 11.2 (S12), CWA South Intertie (S19)	N.E. Sammamish Sewer and Water District *Emergency: N.E. Sammamish Sewer and Water District, Issaquah, CWA South Intertie*

RTCR site	Operating Zone	Conduct Triggered Monitoring at these Sources….	Consecutive/Wholesale System Involved
19 1510 228th Ave SE	Plateau	Well 1 (SO1), Well 2.1/2.2 (S18), Well 4 (S17), Well 7 (S06), Well 8 (S07), Well 9 (S13), Well 10 (S11), Well 11.1 (S14), Well 11.2 (S12), CWA South Intertie (S19)	N.E. Sammamish Sewer and Water District *Emergency: N.E. Sammamish Sewer and Water District, Issaquah, CWA South Intertie*
20 2030 212th Ave. SE	Plateau	Well 1 (SO1), Well 2.1/2.2 (S18), Well 4 (S17), Well 7 (S06), Well 8 (S07), Well 9 (S13), Well 10 (S11), Well 11.1 (S14), Well 11.2 (S12), CWA South Intertie (S19)	N.E. Sammamish Sewer and Water District *Emergency: N.E. Sammamish Sewer and Water District, Issaquah, CWA South Intertie*
21 19605 SE 23rd St	Plateau	Well 1 (SO1), Well 2.1/2.2 (S18), Well 4 (S17), Well 7 (S06), Well 8 (S07), Well 9 (S13), Well 10 (S11), Well 11.1 (S14), Well 11.2 (S12), CWA South Intertie (S19)	N.E. Sammamish Sewer and Water District *Emergency: N.E. Sammamish Sewer and Water District, Issaquah, CWA South Intertie*
22 19636 SE 29th St	Plateau	Well 1 (SO1), Well 2.1/2.2 (S18), Well 4 (S17), Well 7 (S06), Well 8 (S07), Well 9 (S13), Well 10 (S11), Well 11.1 (S14), Well 11.2 (S12), CWA South Intertie (S19)	N.E. Sammamish Sewer and Water District *Emergency: N.E. Sammamish Sewer and Water District, Issaquah, CWA South Intertie*
23 2814 217th Ave SE	Plateau	Well 1 (SO1), Well 2.1/2.2 (S18), Well 4 (S17), Well 7 (S06), Well 8 (S07), Well 9 (S13), Well 10 (S11), Well 11.1 (S14), Well 11.2 (S12), CWA South Intertie (S19)	N.E. Sammamish Sewer and Water District *Emergency: N.E. Sammamish Sewer and Water District, Issaquah, CWA South Intertie*
24 2847 241st Ave SE	Plateau	Well 1 (SO1), Well 2.1/2.2 (S18), Well 4 (S17), Well 7 (S06), Well 8 (S07), Well 9 (S13), Well 10 (S11), Well 11.1 (S14), Well 11.2 (S12), CWA South Intertie (S19)	N.E. Sammamish Sewer and Water District *Emergency: N.E. Sammamish Sewer and Water District, Issaquah, CWA South Intertie*
25 25005 SE 24th St	Plateau	Well 1 (SO1), Well 2.1/2.2 (S18), Well 4 (S17), Well 7 (S06), Well 8 (S07), Well 9 (S13), Well 10 (S11), Well 11.1 (S14), Well 11.2 (S12), CWA South Intertie (S19)	N.E. Sammamish Sewer and Water District *Emergency: N.E. Sammamish Sewer and Water District, Issaquah, CWA South Intertie*

RTCR site	Operating Zone	Conduct Triggered Monitoring at these Sources….	Consecutive/Wholesale System Involved
26 3045 249th Ave SE	Plateau	Well 1 (SO1), Well 2.1/2.2 (S18), Well 4 (S17), Well 7 (S06), Well 8 (S07), Well 9 (S13), Well 10 (S11), Well 11.1 (S14), Well 11.2 (S12), CWA South Intertie (S19)	N.E. Sammamish Sewer and Water District *Emergency: N.E. Sammamish Sewer and Water District, Issaquah, CWA South Intertie*
27 3030 E Beaver Lake Dr SE	Plateau	Well 1 (SO1), Well 2.1/2.2 (S18), Well 4 (S17), Well 7 (S06), Well 8 (S07), Well 9 (S13), Well 10 (S11), Well 11.1 (S14), Well 11.2 (S12), CWA South Intertie (S19)	N.E. Sammamish Sewer and Water District *Emergency: N.E. Sammamish Sewer and Water District, Issaquah, CWA South Intertie*
28 2917 266th Ave Se	Plateau	Well 1 (SO1), Well 2.1/2.2 (S18), Well 4 (S17), Well 7 (S06), Well 8 (S07), Well 9 (S13), Well 10 (S11), Well 11.1 (S14), Well 11.2 (S12), CWA South Intertie (S19)	N.E. Sammamish Sewer and Water District *Emergency: N.E. Sammamish Sewer and Water District, Issaquah, CWA South Intertie*
29 2214 275th Ct SE	Plateau	Well 1 (SO1), Well 2.1/2.2 (S18), Well 4 (S17), Well 7 (S06), Well 8 (S07), Well 9 (S13), Well 10 (S11), Well 11.1 (S14), Well 11.2 (S12), CWA South Intertie (S19)	N.E. Sammamish Sewer and Water District *Emergency: N.E. Sammamish Sewer and Water District, Issaquah, CWA South Intertie*
30 4138 205th Ave SE	Plateau	Well 1 (SO1), Well 2.1/2.2 (S18), Well 4 (S17), Well 7 (S06), Well 8 (S07), Well 9 (S13), Well 10 (S11), Well 11.1 (S14), Well 11.2 (S12), CWA South Intertie (S19)	N.E. Sammamish Sewer and Water District *Emergency: N.E. Sammamish Sewer and Water District, Issaquah, CWA South Intertie*
31 Sample Station not assigned at this time			
32 4126 220th Pl SE	Plateau	Well 1 (SO1), Well 2.1/2.2 (S18), Well 4 (S17), Well 7 (S06), Well 8 (S07), Well 9 (S13), Well 10 (S11), Well 11.1 (S14), Well 11.2 (S12), CWA South Intertie (S19)	N.E. Sammamish Sewer and Water District *Emergency: N.E. Sammamish Sewer and Water District, Issaquah, CWA South Intertie*

RTCR site	Operating Zone	Conduct Triggered Monitoring at these Sources….	Consecutive/Wholesale System Involved
33 3725 Providence Point Dr SE	Plateau	Well 1 (SO1), Well 2.1/2.2 (S18), Well 4 (S17), Well 7 (S06), Well 8 (S07), Well 9 (S13), Well 10 (S11), Well 11.1 (S14), Well 11.2 (S12), CWA South Intertie (S19)	N.E. Sammamish Sewer and Water District *Emergency: N.E. Sammamish Sewer and Water District, Issaquah, CWA South Intertie*
34 4210 244th Pl SE	Plateau	Well 1 (SO1), Well 2.1/2.2 (S18), Well 4 (S17), Well 7 (S06), Well 8 (S07), Well 9 (S13), Well 10 (S11), Well 11.1 (S14), Well 11.2 (S12), CWA South Intertie (S19)	N.E. Sammamish Sewer and Water District *Emergency: N.E. Sammamish Sewer and Water District, Issaquah, CWA South Intertie*
35 4040 262nd Pl SE	Plateau	Well 1 (SO1), Well 2.1/2.2 (S18), Well 4 (S17), Well 7 (S06), Well 8 (S07), Well 9 (S13), Well 10 (S11), Well 11.1 (S14), Well 11.2 (S12), CWA South Intertie (S19)	N.E. Sammamish Sewer and Water District *Emergency: N.E. Sammamish Sewer and Water District, Issaquah, CWA South Intertie*
36 4606 247th Pl SE	Plateau	Well 1 (SO1), Well 2.1/2.2 (S18), Well 4 (S17), Well 7 (S06), Well 8 (S07), Well 9 (S13), Well 10 (S11), Well 11.1 (S14), Well 11.2 (S12), CWA South Intertie (S19)	N.E. Sammamish Sewer and Water District *Emergency: N.E. Sammamish Sewer and Water District, Issaquah, CWA South Intertie*
37 4708 227th Ave SE	Plateau	Well 1 (SO1), Well 2.1/2.2 (S18), Well 4 (S17), Well 7 (S06), Well 8 (S07), Well 9 (S13), Well 10 (S11), Well 11.1 (S14), Well 11.2 (S12), CWA South Intertie (S19)	N.E. Sammamish Sewer and Water District *Emergency: N.E. Sammamish Sewer and Water District, Issaquah, CWA South Intertie*
38 5408 248th Pl SE	Plateau	Well 1 (SO1), Well 2.1/2.2 (S18), Well 4 (S17), Well 7 (S06), Well 8 (S07), Well 9 (S13), Well 10 (S11), Well 11.1 (S14), Well 11.2 (S12), CWA South Intertie (S19)	N.E. Sammamish Sewer and Water District *Emergency: N.E. Sammamish Sewer and Water District, Issaquah, CWA South Intertie*
39 22664 SE 56th Ave.	Plateau	Well 1 (SO1), Well 2.1/2.2 (S18), Well 4 (S17), Well 7 (S06), Well 8 (S07), Well 9 (S13), Well 10 (S11), Well 11.1 (S14), Well 11.2 (S12), CWA South Intertie (S19)	N.E. Sammamish Sewer and Water District *Emergency: N.E. Sammamish Sewer and Water District, Issaquah, CWA South Intertie*

RTCR site	Operating Zone	Conduct Triggered Monitoring at these Sources….	Consecutive/Wholesale System Involved
40 SE 44th and 232nd Ct. SE	Plateau	Well 1 (SO1), Well 2.1/2.2 (S18), Well 4 (S17), Well 7 (S06), Well 8 (S07), Well 9 (S13), Well 10 (S11), Well 11.1 (S14), Well 11.2 (S12), CWA South Intertie (S19)	N.E. Sammamish Sewer and Water District *Emergency: N.E. Sammamish Sewer and Water District, Issaquah, CWA South Intertie*
41 2311 259th Pl SE	Plateau	Well 1 (SO1), Well 2.1/2.2 (S18), Well 4 (S17), Well 7 (S06), Well 8 (S07), Well 9 (S13), Well 10 (S11), Well 11.1 (S14), Well 11.2 (S12), CWA South Intertie (S19)	N.E. Sammamish Sewer and Water District *Emergency: N.E. Sammamish Sewer and Water District, Issaquah, CWA South Intertie*
42 222 238th Ave SE	Plateau	Well 1 (SO1), Well 2.1/2.2 (S18), Well 4 (S17), Well 7 (S06), Well 8 (S07), Well 9 (S13), Well 10 (S11), Well 11.1 (S14), Well 11.2 (S12), CWA South Intertie (S19)	N.E. Sammamish Sewer and Water District *Emergency: N.E. Sammamish Sewer and Water District, Issaquah, CWA South Intertie*
43 21838 NE 18th Way	Plateau	Well 1 (SO1), Well 2.1/2.2 (S18), Well 4 (S17), Well 7 (S06), Well 8 (S07), Well 9 (S13), Well 10 (S11), Well 11.1 (S14), Well 11.2 (S12), CWA South Intertie (S19)	N.E. Sammamish Sewer and Water District *Emergency: N.E. Sammamish Sewer and Water District, Issaquah, CWA South Intertie*
44 214th and SE 5th	Plateau	Well 1 (SO1), Well 2.1/2.2 (S18), Well 4 (S17), Well 7 (S06), Well 8 (S07), Well 9 (S13), Well 10 (S11), Well 11.1 (S14), Well 11.2 (S12), CWA South Intertie (S19)	N.E. Sammamish Sewer and Water District *Emergency: N.E. Sammamish Sewer and Water District, Issaquah, CWA South Intertie*
45 270th Ave SE and SE 11th	Plateau	Well 1 (SO1), Well 2.1/2.2 (S18), Well 4 (S17), Well 7 (S06), Well 8 (S07), Well 9 (S13), Well 10 (S11), Well 11.1 (S14), Well 11.2 (S12), CWA South Intertie (S19)	N.E. Sammamish Sewer and Water District *Emergency: N.E. Sammamish Sewer and Water District, Issaquah, CWA South Intertie*
46 Trossachs Blvd. & SE 24th Ave.	Plateau	Well 1 (SO1), Well 2.1/2.2 (S18), Well 4 (S17), Well 7 (S06), Well 8 (S07), Well 9 (S13), Well 10 (S11), Well 11.1 (S14), Well 11.2 (S12), CWA South Intertie (S19)	N.E. Sammamish Sewer and Water District *Emergency: N.E. Sammamish Sewer and Water District, Issaquah, CWA South Intertie*

RTCR site	Operating Zone	Conduct Triggered Monitoring at these Sources….	Consecutive/Wholesale System Involved
47 1931 249th Pl SE	Plateau	Well 1 (SO1), Well 2.1/2.2 (S18), Well 4 (S17), Well 7 (S06), Well 8 (S07), Well 9 (S13), Well 10 (S11), Well 11.1 (S14), Well 11.2 (S12), CWA South Intertie (S19)	N.E. Sammamish Sewer and Water District *Emergency: N.E. Sammamish Sewer and Water District, Issaquah, CWA South Intertie*
48 1537 E. Lk. Samm. Pkwy SE	Plateau	Well 1 (SO1), Well 2.1/2.2 (S18), Well 4 (S17), Well 7 (S06), Well 8 (S07), Well 9 (S13), Well 10 (S11), Well 11.1 (S14), Well 11.2 (S12), CWA South Intertie (S19)	N.E. Sammamish Sewer and Water District *Emergency: N.E. Sammamish Sewer and Water District, Issaquah, CWA South Intertie*
49 6503 E Lk Samm Pkwy SE	Plateau	Well 1 (SO1), Well 2.1/2.2 (S18), Well 4 (S17), Well 7 (S06), Well 8 (S07), Well 9 (S13), Well 10 (S11), Well 11.1 (S14), Well 11.2 (S12), CWA South Intertie (S19)	N.E. Sammamish Sewer and Water District *Emergency: N.E. Sammamish Sewer and Water District, Issaquah, CWA South Intertie*
50 23425 SE Black Nugget Rd	Plateau	Well 1 (SO1), Well 2.1/2.2 (S18), Well 4 (S17), Well 7 (S06), Well 8 (S07), Well 9 (S13), Well 10 (S11), Well 11.1 (S14), Well 11.2 (S12), CWA South Intertie (S19)	N.E. Sammamish Sewer and Water District *Emergency: N.E. Sammamish Sewer and Water District, Issaquah, CWA South Intertie*
51 NE 8th Pl and 233rd Ave NE	Plateau	Well 1 (SO1), Well 2.1/2.2 (S18), Well 4 (S17), Well 7 (S06), Well 8 (S07), Well 9 (S13), Well 10 (S11), Well 11.1 (S14), Well 11.2 (S12), CWA South Intertie (S19)	N.E. Sammamish Sewer and Water District *Emergency: N.E. Sammamish Sewer and Water District, Issaquah, CWA South Intertie*
52 5150 236th Ave SE	Plateau	Well 1 (SO1), Well 2.1/2.2 (S18), Well 4 (S17), Well 7 (S06), Well 8 (S07), Well 9 (S13), Well 10 (S11), Well 11.1 (S14), Well 11.2 (S12), CWA South Intertie (S19)	N.E. Sammamish Sewer and Water District *Emergency: N.E. Sammamish Sewer and Water District, Issaquah, CWA South Intertie*
53 25913 NE 27th Dr	Cascade View	Well 12 (S16), Well 13 (S24), CWA North Intertie (S19)	*Emergency: Union Hill Water Association, Ames Lake Water Association, CWA North Intertie, Redmond*

RTCR site	Operating Zone	Conduct Triggered Monitoring at these Sources….	Consecutive/Wholesale System Involved
54 1434 241st Pl SE	Plateau	Well 1 (SO1), Well 2.1/2.2 (S18), Well 4 (S17), Well 7 (S06), Well 8 (S07), Well 9 (S13), Well 10 (S11), Well 11.1 (S14), Well 11.2 (S12), CWA South Intertie (S19)	N.E. Sammamish Sewer and Water District *Emergency: N.E. Sammamish Sewer and Water District, Issaquah, CWA South Intertie*
55 4644 238th Way SE	Plateau	Well 1 (SO1), Well 2.1/2.2 (S18), Well 4 (S17), Well 7 (S06), Well 8 (S07), Well 9 (S13), Well 10 (S11), Well 11.1 (S14), Well 11.2 (S12), CWA South Intertie (S19)	N.E. Sammamish Sewer and Water District *Emergency: N.E. Sammamish Sewer and Water District, Issaquah, CWA South Intertie*
56 2637 231st Pl SE	Plateau	Well 1 (SO1), Well 2.1/2.2 (S18), Well 4 (S17), Well 7 (S06), Well 8 (S07), Well 9 (S13), Well 10 (S11), Well 11.1 (S14), Well 11.2 (S12), CWA South Intertie (S19)	N.E. Sammamish Sewer and Water District *Emergency: N.E. Sammamish Sewer and Water District, Issaquah, CWA South Intertie*
57 3609 212th Pl SE	Plateau	Well 1 (SO1), Well 2.1/2.2 (S18), Well 4 (S17), Well 7 (S06), Well 8 (S07), Well 9 (S13), Well 10 (S11), Well 11.1 (S14), Well 11.2 (S12), CWA South Intertie (S19)	N.E. Sammamish Sewer and Water District *Emergency: N.E. Sammamish Sewer and Water District, Issaquah, CWA South Intertie*
58 21341 SE 13th Pl	Plateau	Well 1 (SO1), Well 2.1/2.2 (S18), Well 4 (S17), Well 7 (S06), Well 8 (S07), Well 9 (S13), Well 10 (S11), Well 11.1 (S14), Well 11.2 (S12), CWA South Intertie (S19)	N.E. Sammamish Sewer and Water District *Emergency: N.E. Sammamish Sewer and Water District, Issaquah, CWA South Intertie*
59 1514 235th Ave. SE	Plateau	Well 1 (SO1), Well 2.1/2.2 (S18), Well 4 (S17), Well 7 (S06), Well 8 (S07), Well 9 (S13), Well 10 (S11), Well 11.1 (S14), Well 11.2 (S12), CWA South Intertie (S19)	N.E. Sammamish Sewer and Water District *Emergency: N.E. Sammamish Sewer and Water District, Issaquah, CWA South Intertie*
60 24213 SE 37th Pl	Plateau	Well 1 (SO1), Well 2.1/2.2 (S18), Well 4 (S17), Well 7 (S06), Well 8 (S07), Well 9 (S13), Well 10 (S11), Well 11.1 (S14), Well 11.2 (S12), CWA South Intertie (S19)	N.E. Sammamish Sewer and Water District *Emergency: N.E. Sammamish Sewer and Water District, Issaquah, CWA South Intertie*

RTCR site	Operating Zone	Conduct Triggered Monitoring at these Sources….	Consecutive/Wholesale System Involved
61 Sample Station not assigned at this time			
62 Sample Station not assigned at this time			
63 Sample Station not assigned at this time			
64 8513 255th Ave NE	Cascade View	Well 12 (S16), Well 13 (S24), CWA North Intertie (S19)	*Emergency: Union Hill Water Association, Ames Lake Water Association, CWA North Intertie, Redmond*
65 4014 251st Pl SE	Plateau	Well 1 (SO1), Well 2.1/2.2 (S18), Well 4 (S17), Well 7 (S06), Well 8 (S07), Well 9 (S13), Well 10 (S11), Well 11.1 (S14), Well 11.2 (S12), CWA South Intertie (S19)	N.E. Sammamish Sewer and Water District *Emergency: N.E. Sammamish Sewer and Water District, Issaquah, CWA South Intertie*
66 3416 221st Ave SE	Plateau	Well 1 (SO1), Well 2.1/2.2 (S18), Well 4 (S17), Well 7 (S06), Well 8 (S07), Well 9 (S13), Well 10 (S11), Well 11.1 (S14), Well 11.2 (S12), CWA South Intertie (S19)	N.E. Sammamish Sewer and Water District *Emergency: N.E. Sammamish Sewer and Water District, Issaquah, CWA South Intertie*
67 2905 204th Ave SE	Plateau	Well 1 (SO1), Well 2.1/2.2 (S18), Well 4 (S17), Well 7 (S06), Well 8 (S07), Well 9 (S13), Well 10 (S11), Well 11.1 (S14), Well 11.2 (S12), CWA South Intertie (S19)	N.E. Sammamish Sewer and Water District *Emergency: N.E. Sammamish Sewer and Water District, Issaquah, CWA South Intertie*
68 20621 NE 8th St	Plateau	Well 1 (SO1), Well 2.1/2.2 (S18), Well 4 (S17), Well 7 (S06), Well 8 (S07), Well 9 (S13), Well 10 (S11), Well 11.1 (S14), Well 11.2 (S12), CWA South Intertie (S19)	N.E. Sammamish Sewer and Water District *Emergency: N.E. Sammamish Sewer and Water District, Issaquah, CWA South Intertie*
69 265th Ave Se and Belvedere Way	Plateau	Well 1 (SO1), Well 2.1/2.2 (S18), Well 4 (S17), Well 7 (S06), Well 8 (S07), Well 9 (S13), Well 10 (S11), Well 11.1 (S14), Well 11.2 (S12), CWA South Intertie (S19)	N.E. Sammamish Sewer and Water District *Emergency: N.E. Sammamish Sewer and Water District, Issaquah, CWA South Intertie*

RTCR site	Operating Zone	Conduct Triggered Monitoring at these Sources….	Consecutive/Wholesale System Involved
70 21606 SE 16th Pl	Plateau	Well 1 (SO1), Well 2.1/2.2 (S18), Well 4 (S17), Well 7 (S06), Well 8 (S07), Well 9 (S13), Well 10 (S11), Well 11.1 (S14), Well 11.2 (S12), CWA South Intertie (S19)	N.E. Sammamish Sewer and Water District *Emergency: N.E. Sammamish Sewer and Water District, Issaquah, CWA South Intertie*
71 1838 236th Ave NE	Plateau	Well 1 (SO1), Well 2.1/2.2 (S18), Well 4 (S17), Well 7 (S06), Well 8 (S07), Well 9 (S13), Well 10 (S11), Well 11.1 (S14), Well 11.2 (S12), CWA South Intertie (S19)	N.E. Sammamish Sewer and Water District *Emergency: N.E. Sammamish Sewer and Water District, Issaquah, CWA South Intertie*
72 23944 SE 41st St	Plateau	Well 1 (SO1), Well 2.1/2.2 (S18), Well 4 (S17), Well 7 (S06), Well 8 (S07), Well 9 (S13), Well 10 (S11), Well 11.1 (S14), Well 11.2 (S12), CWA South Intertie (S19)	N.E. Sammamish Sewer and Water District *Emergency: N.E. Sammamish Sewer and Water District, Issaquah, CWA South Intertie*
73 23039 SE 37th St	Plateau	Well 1 (SO1), Well 2.1/2.2 (S18), Well 4 (S17), Well 7 (S06), Well 8 (S07), Well 9 (S13), Well 10 (S11), Well 11.1 (S14), Well 11.2 (S12), CWA South Intertie (S19)	N.E. Sammamish Sewer and Water District *Emergency: N.E. Sammamish Sewer and Water District, Issaquah, CWA South Intertie*
74 Sample Station not assigned at this time			
75 Sample Station not assigned at this time			
76 Sample Station not assigned at this time			
77 609 216th Ave NE	Plateau	Well 1 (SO1), Well 2.1/2.2 (S18), Well 4 (S17), Well 7 (S06), Well 8 (S07), Well 9 (S13), Well 10 (S11), Well 11.1 (S14), Well 11.2 (S12), CWA South Intertie (S19)	N.E. Sammamish Sewer and Water District *Emergency: N.E. Sammamish Sewer and Water District, Issaquah, CWA South Intertie*

RTCR site	Operating Zone	Conduct Triggered Monitoring at these Sources….	Consecutive/Wholesale System Involved
78 21214 SE 40th St.	Plateau	Well 1 (SO1), Well 2.1/2.2 (S18), Well 4 (S17), Well 7 (S06), Well 8 (S07), Well 9 (S13), Well 10 (S11), Well 11.1 (S14), Well 11.2 (S12), CWA South Intertie (S19)	N.E. Sammamish Sewer and Water District *Emergency: N.E. Sammamish Sewer and Water District, Issaquah, CWA South Intertie*

6.0 PREPARATION INFORMATION

The Water Superintendent is responsible for overseeing preparation, review, and updates to the District's Triggered Ground Water Monitoring Plan. This Plan will be reviewed and updated every 6 years, coinciding with updates to the Revised Total Coliform Monitoring Plan.

This page intentionally left blank.

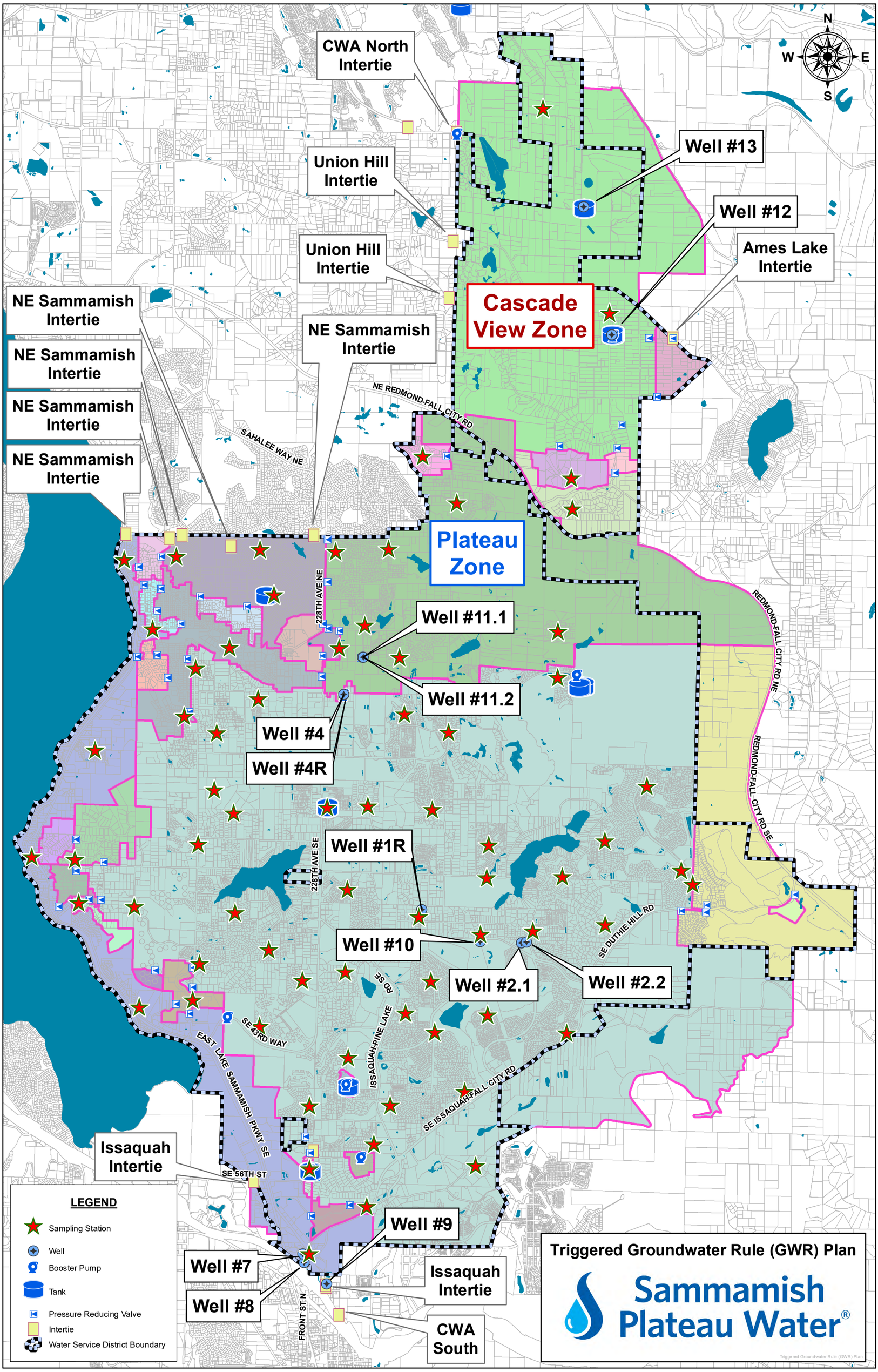
N
W
E
S
CWA North Intertie
Union Hill Intertie
Union Hill Intertie
NE Sammamish Intertie
NE Sammamish Intertie
NE Sammamish Intertie
NE Sammamish Intertie
NE Sammamish Intertie
Well #13
Well #12
Ames Lake Intertie
Cascade View Zone
NE REDMOND-FALL CITY RD
SAHALEE WAY NE
Plateau Zone
228TH AVE NE
Well #11.1
Well #11.2
Well #4
Well #4R
REDMOND-FALL CITY RD NE
REDMOND-FALL CITY RD SE
Well #1R
228TH AVE SE
Well #10
SE DUTHIE HILL RD
Well #2.1
Well #2.2
SE 43RD WAY
EAST LAKE SAMMAMISH PKWY SE
ISSAQUAH-PINE LAKE RD SE
SE ISSAQUAH-FALL CITY RD
Issaquah Intertie
SE 56TH ST
Well #9
Well #7
Well #8
Issaquah Intertie
FRONT ST N
CWA South
LEGEND
Sampling Station
Well
Booster Pump
Tank
Pressure Reducing Valve
Intertie
Water Service District Boundary
Triggered Groundwater Rule (GWR) Plan
Sammamish Plateau Water®

Standard Monitoring Plan Entry

I. IDSE General Information

*PWS ID	WA5340900
*PWS Name	SAMMAMISH PLATE
*PWS Address	1510 228TH AVE SE
*City	SAMMAMISH
*State	WA
*Zip	98075
*Population Served	55128
*System Type	CWS
*Source Water Type	SWP
*Buying / Selling Relationships	Consecutive System

C. PWS Operations

Residual Disinfectant Type	☑ Chlorine	☐ Chloramines	☐ Other	
Number of Disinfected Sources	Surface		GWUDI	
	Ground	1	Purchased	2

D. Contact Person

*Contact Name	John Anderson	
Title	Water Team Manager	
Phone Number	(425) 392-6256	ext.
Fax	(425) 391-5389	
E-mail Address	wqcompliance@sammplat.wa.org	

Standard Monitoring Plan Entry

II. IDSE Requirements

A. Number of Required Standard Monitoring Sites

High TTHM	5
High HAA5	4
Near Entry Point Sites	3
Average Residence Time Sites	4
Total	16

Note: If you have fewer entry points than required near entry point sites, you will sample at more TTHM and/or HAA5 sites, but your total number of sites will not change. See chapter 7 step 2 of the IDSE Guidance Manual for more information.

B. Schedule

Schedule 1

C. Required Standard Monitoring Frequency

During peak historical month (1 monitoring period)

Every 90 days (4 monitoring periods)

Every 60 days (6 monitoring periods)

Standard Monitoring Plan Entry

III. Selecting Standard Monitoring Sites

A. Data Evaluated Check each box corresponding to the data that you used to select each type of standard monitoring site.

Data Type	Type of Site			
	Near Entry Point	Average Residence Time	High TTHM	High HAA5
System Configuration:				
Pipe layout, locations of storage facilities	☐	☑	☑	☑
Locations of sources and consecutive system entry points	☑	☐	☐	☐
Pressure zones	☐	☑	☑	☑
Information on population density	☐	☐	☑	☐
Locations of large customers	☐	☐	☐	☐
Water Quality and Operational Data:				
Disinfectant residual data	☐	☑	☑	☑
Stage 1 DBP data	☐	☐	☑	☑
Other DBP data	☐	☐	☐	☐
Microbial monitoring data	☐	☐	☐	☐
Tank levels data, pump run times	☐	☑	☑	☑
Customer billing records	☐	☐	☐	☐
Advanced Tools:				
Water distribution system model	☐	☐	☐	☐
Tracer study	☐	☐	☐	☐

B. Summary of Data.* Provide a summary of data you relied on to justify standard monitoring site selection.

District sources include groundwater, year round, from 12 currently operating groundwater wells and treated surface water from a regional wholesaler (Cascade Water Alliance) that is used seasonally from November 1- April 30. Currently, treated surface water only enters the District's northern service area called the Cascade View Zone, but in the near future the District plans to operate a south intertie with the regional wholesaler and introduce treated surface water into their southern service area called the Plateau Zone. IDSE site selection relied on two years (2004-2005) of monthly disinfection residual data from 60 disinfection sampling sites established for Stage 1 monitoring. These sites are dedicated and secure sample collection stations that tap the District's distribution system throughout their service area. Population density, 2005 Stage 1 DDBP data, pipe layout, locations of our wholesaler system entry points, and pressure zones were also evaluated. Chlorine residual data from June, July and August were tabulated and evaluated for system range (0.0 to 0.24 mg/l) and system average (0.08 mg/l). During selection, sites were identified with levels close to this average for average residence time sites and with high rediduals (elevated above 0.1 mg/L) for high HAA5. For high TTHM, site selections were based primarily on population and distribution system knowledge to determine older pipes with dead end lines where longer residence times are expected in addition to Stage 1 TTHM data. During the selection process, a plot was prepared of all candidate sites and system pressure zone boundaries, including existing Stage 1 sites, to ensure that Stage 2 IDSE sites were spatially distributed and hydraulically diverse.

Standard Monitoring Plan Entry

IV. Justification of Standard Monitoring Sites *

You are required to complete this section in its entirety before submitting the Plan.

#	Standard Monitoring Site ID (from map)1	Site Type	Justification
1		Near Entry Point	This is the entry point of regional wholesale surface water from Cascade Water Alliance/Seattle Public Utilities (CWA/SPU) into the northern part of the distribution system referred to as the Cascade View Zone. This station is located prior to the first group of customers. Entry of surface water into the distribution system is normally seasonal (November 1 through April 30). As result of this seasonal use, sample collection from this station will represent a blend of groundwater/surface water during the early part of May, becoming predominantly groundwater in the summer/fall months prior to November 1st.
2		Near Entry Point	This is an entry point into three major pressure distribution zones from the District's deep wellfield treatment facility. The sample station will be located downstream of treatment. The deep groundwater source has a greater amount of organic content compared to the District's shallower aquifer sources.
3		Near Entry Point	This is the entry point of regional wholesale surface water (CWA/SPU) into the southern part of the distribution system. This station is located prior to the first group of customers. Entry of surface water will initially be seasonal (November 1 throught April 30). As a result of this seasonal use, sample collection from this station will represent a blend of groundwater/surface water during the early part of May, becoming predominantly groundwater in the summer/fall months prior to November 1st. To-date, this regional intertie has been dormant, but is expected to be active in 2006.
4		Average Residence Time	Represents average residence time in the northwestern part of the plateau system. In the summer months, this station has chlorine residuals that are close to our calculated system-wide average of 0.08mg/l. The sample station site taps an 8-inch water main.
5		Average Residence Time	Represents average residence time in the central part of the plateau system. In the summer months, this station has chlorine residuals that are close to our calculated system-wide average of 0.08mg/l. This sample site taps an 8-inch ductile iron water main.
6		Average Residence Time	Represents average residence time in the southern part of the plateau system. In the summer months, this station has chlorine residuals that are close to our calculated system-wide average of 0.08 mg/l. The sample station site taps an 8-inch ductile iron water main.
7		Average Residence Time	Represents average residence time in the southwestern part of the plateau system. In the summer months, this station has chlorine residuals that are close to our calculated system-wide average of 0.08 mg/l. The site is located near and upstream of a booster station and an emergency operated PRV. This sample site taps an 8" ductile-iron water main.

8	High TTHM	This station represents high TTHM levels in the northern service area (Cascade View). It is located at a dead end line with low customer population. This is a new station but it is expected to have low chlorine residuals and high TTHM levels due to its location within a distribution system dead end, and within a sparsely populated area. The site receives seasonal surface water from the north regional intertie and close to consistently recorded high TTHM Stage 1 sampling sites.
9	High TTHM	This station represents high TTHM levels in the northwestern portion of the Plateau system. Summer chlorine residuals at this location are generally very low. It is located near a 3 million gallon storage tank. The site is in a location of older distribution pipe within the 700 pressure zone.
10	High TTHM	This station represents high TTHM levels. Summer chlorine residuals at this location are generally low. The site is also at the dead end location of the 650 pressure zone and receives some water from deep groundwater sources that have greater organic content than the shallower aquifer sources.
11	High TTHM	This station represents high TTHM levels in the central portion of the Plateau system. Summer chlorine residuals at this location are generally low. The site is located in an area under construction that is planned to be built out and populated in two to three years. Until then, distribution in this area is expected to have longer residence times.
12	High TTHM	This station represents high TTHM levels in the eastern portion of the Plateau system. Summer chlorine residuals at this location are generally very low. It is located in a service area with older distribution pipe. The site is also located at a dead end in the distribution. The area occasionally receives booster chlorinated water (during the summer) from two 4 million gallon storage tanks.
13	High HAA5	This station represents high HAA5 levels in the northeastern portion of the Plateau system. It is located in a service area with older distribution pipe. Summer chlorine residuals at this location are generally above the system average of 0.08mg/L. The site is also located near a booster chlorination site and two 4 million gallon tanks.
14	High HAA5	This station represents high HAA5 levels in the western portion of the Plateau system. Summer chlorine residuals at this location are generally well above the system average of 0.08 mg/L. The site is located along a main north-south transmission pipeline for the plateau service area. Water in this main line is expected to have low residence time.
15	High HAA5	This station represents high HAA5 levels in the central portion of the Plateau system. Summer chlorine residuals at this location are generally well above the system average of 0.08 mg/ L. The site is located along a main north-system transmission pipeline and in an area of dense population for the service area. Water in this main line is expected to have a low residence time.
16	High HAA5	This station represents high HAA5 levels in the southern portion of the Plateau system. Summer chlorine residuals at this location are generally well above the system average of 0.08 mg/l. The site is located near a major transmission tank for the plateau service area. Water in this area is expected to have a low residence time.

1 Verify that site IDs match IDs in Section IV and on your distribution system schematic (See Section VII of this form).

Standard Monitoring Plan Entry

V. Peak Historical Month and Standard Monitoring Dates

A. *Peak Historical Month November

B. If multiple Sources, Source Used to Determine Peak Historical Month (enter "N/A" if only one source in your system):

Based on Stage 1 TTHM data.

C. *Peak Historical Month Based On (check all that apply):

☑ High TTHM

☐ Warmest water temperature

☐ High HAA5

If you used other information to select your peak historical month, explain here:

D. Proposed Standard Monitoring Dates

You are required to complete this section in its entirety before submitting the Plan.

Standard Monitoring Site ID (from map)*	Projected Sampling Date (day or week)**					
	Period 1	Period 2	Period 3	Period 4	Period 5	Period 6
	week of 11/12/07	week of 1/14/08	week of 3/10/08	week of 5/12/08	week of 7/14/08	week of 9/8/08
	week of 11/12/07	week of 1/14/08	week of 3/10/08	week of 5/12/08	week of 7/14/08	week of 9/8/08
	week of 11/12/07	week of 1/14/08	week of 3/10/08	week of 5/12/08	week of 7/14/08	week of 9/8/08
	week of 11/12/07	week of 1/14/08	week of 3/10/08	week of 5/12/08	week of 7/14/08	week of 9/8/08
	week of 11/12/07	week of 1/14/08	week of 3/10/08	week of 5/12/08	week of 7/14/08	week of 9/8/08
	week of 11/12/07	week of 1/14/08	week of 3/10/08	week of 5/12/08	week of 7/14/08	week of 9/8/08
	week of 11/12/07	week of 1/14/08	week of 3/10/08	week of 5/12/08	week of 7/14/08	week of 9/8/08
	week of 11/12/07	week of 1/14/08	week of 3/10/08	week of 5/12/08	week of 7/14/08	week of 9/8/08
	week of 11/12/07	week of 1/14/08	week of 3/10/08	week of 5/12/08	week of 7/14/08	week of 9/8/08
	week of 11/12/07	week of 1/14/08	week of 3/10/08	week of 5/12/08	week of 7/14/08	week of 9/8/08
	week of 11/12/07	week of 1/14/08	week of 3/10/08	week of 5/12/08	week of 7/14/08	week of 9/8/08
	week of 11/12/07	week of 1/14/08	week of 3/10/08	week of 5/12/08	week of 7/14/08	week of 9/8/08
	week of 11/12/07	week of 1/14/08	week of 3/10/08	week of 5/12/08	week of 7/14/08	week of 9/8/08
	week of 11/12/07	week of 1/14/08	week of 3/10/08	week of 5/12/08	week of 7/14/08	week of 9/8/08
	week of 11/12/07	week of 1/14/08	week of 3/10/08	week of 5/12/08	week of 7/14/08	week of 9/8/08

*** Site IDs should match IDs on your distribution system schematic (See Section VII).**
**** period = monitoring period. Complete for the number of periods from Section II.C.**

Standard Monitoring Plan Entry

VI. Planned Stage 1 DBPR Compliance Monitoring Schedule

If you are a consecutive system that is not required to conduct Stage 1 DBPR compliance monitoring, enter none under Stage 1 DBPR Monitoring Site ID and none under Period 1.

Stage 1 DBPR Monitoring Site ID (from map)1	Projected Sampling Date (date or week)2			
	Period 1	Period 2	Period 3	Period 4
SS #2	week of 11/12/07	week of 2/11/08	week of 5/12/08	week of 8/11/08
SS #3	week of 11/12/07	week of 2/11/08	week of 5/12/08	week of 8/11/08
SS #53	week of 11/12/07	week of 2/11/08	week of 5/12/08	week of 8/11/08
SS #6	week of 11/12/07	week of 2/11/08	week of 5/12/08	week of 8/11/08
SS #48	week of 11/12/07	week of 2/11/08	week of 5/12/08	week of 8/11/08
SS #17	week of 11/12/07	week of 2/11/08	week of 5/12/08	week of 8/11/08
SS #18	week of 11/12/07	week of 2/11/08	week of 5/12/08	week of 8/11/08
SS #1	week of 11/12/07	week of 2/11/08	week of 5/12/08	week of 8/11/08
SS #24	week of 11/12/07	week of 2/11/08	week of 5/12/08	week of 8/11/08
SS #26	week of 11/12/07	week of 2/11/08	week of 5/12/08	week of 8/11/08
SS #27	week of 11/12/07	week of 2/11/08	week of 5/12/08	week of 8/11/08
SS #30	week of 11/12/07	week of 2/11/08	week of 5/12/08	week of 8/11/08
SS #46	week of 11/12/07	week of 2/11/08	week of 5/12/08	week of 8/11/08

1 Verify that site IDs match IDs on your distribution system schematic (See Section VII of this form). Add additional monitoring sites if you are required to monitor at more than 8 Stage 1 DBPR sites.
2 period = monitoring period. Complete for the number of periods in which you must conduct Stage 1 DBPR monitoring during IDSE monitoring. Can list exact date or week (e.g., week of 7/9/07)

Standard Monitoring Plan Entry

VII & VIII Schematic & Attachments

The following is a list of attachments that have already been submitted.

File Name	Date Uploaded
Distribution System Schematic	2006-09-27 10:58:12.0

If you prefer to send attachments via mail or e-mail, please check the box for "Sending attachments by mail". You may mail your attachments to one of the following addresses:

Mailing Address:
STAGE2 DBPR
US EPA-IPMC
PO Box 98
Dayton, OH 45401-0098

E-mail Address:

stage2mdbp@epa.gov

☐

Sending Attachments by Mail

Enter a description of the items that will be mailed.

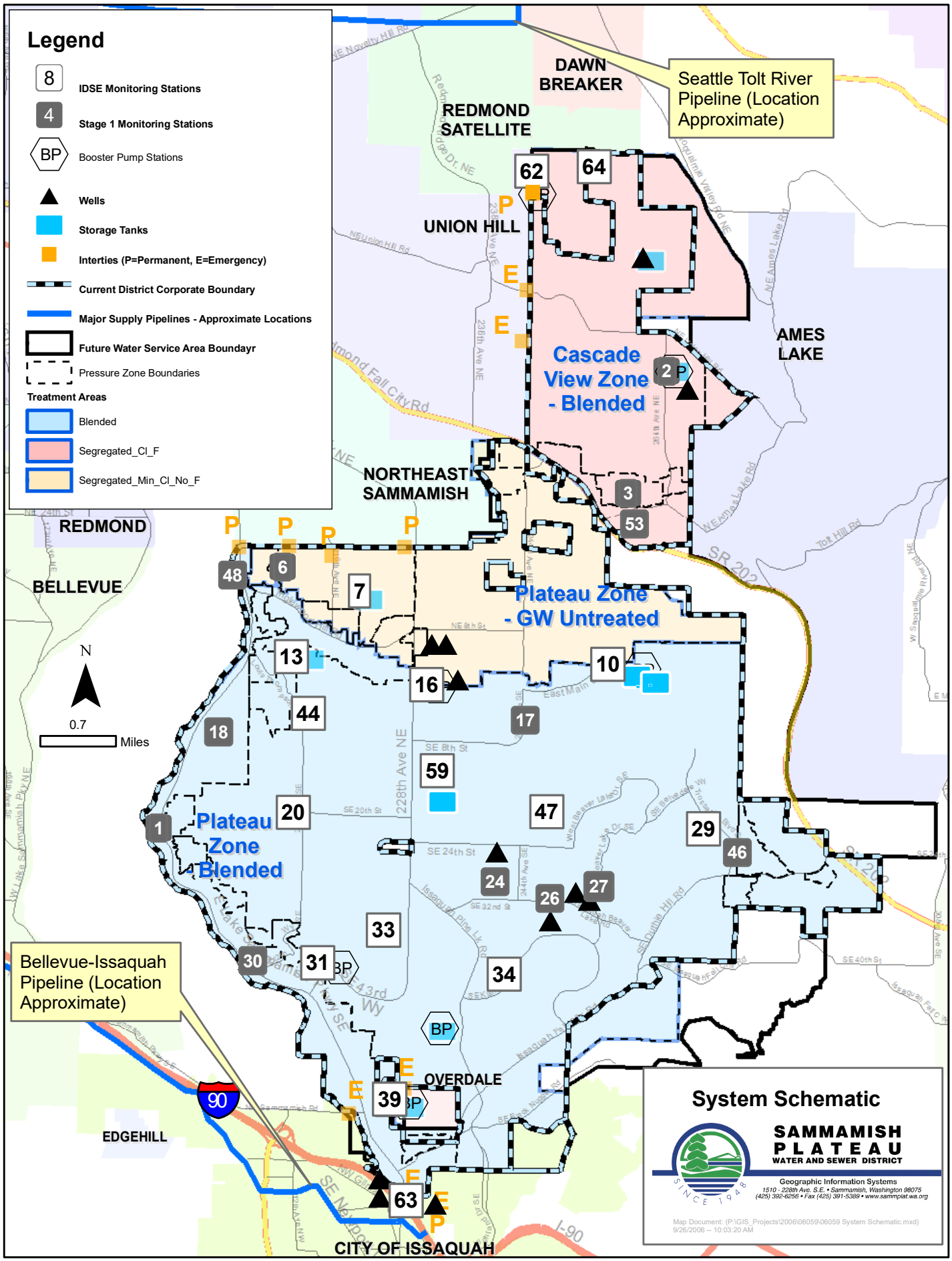
Legend
8 IDSE Monitoring Stations
4 Stage 1 Monitoring Stations
BP Booster Pump Stations
Wells
Storage Tanks
Interties (P=Permanent, E=Emergency)
Current District Corporate Boundary
Major Supply Pipelines - Approximate Locations
Future Water Service Area Boundayr
Pressure Zone Boundaries
Treatment Areas
Blended
Segregated_Cl_F
Segregated_Min_Cl_No_F
Seattle Tolt River Pipeline (Location Approximate)
DAWN BREAKER
REDMOND SATELLITE
UNION HILL
AMES LAKE
Cascade View Zone - Blended
NORTHEAST SAMMAMISH
REDMOND
BELLEVUE
Plateau Zone - GW Untreated
Plateau Zone Blended
OVERDALE
EDGEHILL
CITY OF ISSAQUAH
Bellevue-Issaquah Pipeline (Location Approximate)
N
0.7 Miles
System Schematic
SAMMAMISH PLATEAU WATER AND SEWER DISTRICT
SINCE 1948
Geographic Information Systems
1510 - 228th Ave. S.E. • Sammamish, Washington 98075
(425) 392-6256 • Fax (425) 391-5389 • www.sammplat.wa.org
Map Document: (P:\GIS_Projects\2006\06059\06059 System Schematic.mxd)
9/26/2006 -- 10:03:20 AM

This page intentionally left blank.

CDM

Stage 1 Disinfectants and Disinfection Byproducts Rule Identified Treatment Plants and Monitoring Plan Sammamish Plateau Water and Sewer District Sammamish, Washington

May 16, 2005

Prepared For:

Washington State Department of Health

Northwest Regional Office

Prepared By:

SAMMAMISH PLATEAU WATER AND SEWER DISTRICT

and

CDM

11811 NE 1st Street, Suite 201

Bellevue, Washington 98005

CDM Project No. 19936-42969

A Report Prepared For:

Sammamish Plateau Water and Sewer District

Stage 1 Disinfectants and Disinfection Byproducts Rule Identified Treatment Plants and Monitoring Plan Sammamish Plateau Water and Sewer District Sammamish, Washington

May 16, 2005

Scott E. Coffey, L.H.G
Project Hydrologist

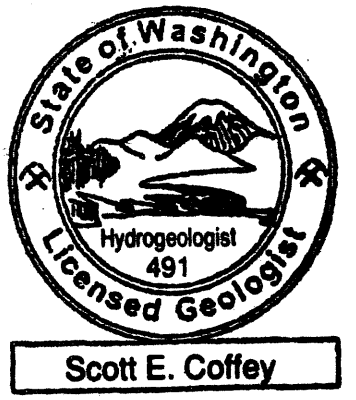

CDM
11811 N.E. 1st Street, Suite 201
Bellevue, Washington 98005

CDM Project No. 19936-42969

Contents

Introduction 1

Part 1 Identification of Treatment Plants 2

Regulatory Overview 2

System Overview 2

Source Grouping 4

Well Construction 4

Hydrogeology 5

Plateau and Cascade View Aquifer System 5
Hydraulic Connection 5
Valley Aquifer System 8
Hydraulic Connection 8

Water Quality 8

Treatment Plant Identification 9

Part 2 DDBP Monitoring Plan 11

Disinfection Monitoring and Compliance 11

Byproduct Monitoring and Compliance 12

Reduced Monitoring Qualifications 13

Distribution

Tables

Table 1 District Source Treatment Summary
Table 2 District Production Well Construction Data
Table 3 Characteristics of Geohydrologic Units in the Plateau and Cascade View Aquifer System
Table 4 Water Quality Data for Sources Included in Treatment Plant 1
Table 5 Water Quality Data for Sources Included in Treatment Plant 2
Table 6 Water Quality Data for Sources Included in Treatment Plant 3
Table 7 SPWSD System Sources and Identified Treatment Plants
Table 8 Treatment Plant Sources
Table 9 DBP Monitoring Stations and Schedule
Table 10 MRDLs and MCLs for the Stage 1 D/DBP Rule
Table 11 Reduced Monitoring

Figures

Figure 1 Location of SPWSD Service Area, Active Production Wells and Future SPU Connections
Figure 2 Schematic Cross-section of Plateau and Cascade View Aquifer System
Figure 3 West-East Plateau Cross Section
Figure 4 Northwest – Southeast Cascade View Cross Section
Figure 5 PT-3 Long-Term Hydrograph
Figure 6 Well 6 Long-Term Hydrograph
Figure 7 Valley Aquifer System Cross Section
Figure 8 VT-1 Long-Term Hydrograph
Figure 9 DDBP Sampling Station Location Map
Figure 10 DBP Monitoring Stations and Water Mains

Section 1
Introduction

This report presents information for Sammamish Plateau Water and Sewer District (System ID No. 409009) as required under the Federal Stage I Disinfectants and Disinfection Byproducts (DDBP) Rule and incorporated into Washington State Department of Health (DOH) drinking water regulations on April 27, 2003. The report is divided into two parts:

Part 1 – Identification of Treatment Plants

Part 2 – DDBP Monitoring Plan

Part 1
Identification of Treatment Plants

Part 1 of this report provides a brief overview of the regulatory framework of the Stage 1 DDBP rule, Sammamish Plateau Water and Sewer District's (District) water supply system, and a presentation of parameters as specified in DOH publication #331-235 used to demonstrate the grouping of individual wells within selected treatment plants.

Regulatory Overview

The Safe Drinking Water Act (SDWA), now administered by the Environmental Protection Agency (EPA), was enacted over 25 years ago to regulate the public water industry and to safeguard the public health. Many of the waterborne diseases common over 100 years ago have been eliminated with the introduction of chemical disinfection. Disinfectants such as chlorine and ozone are effective in inactivating many microorganisms in our public drinking water.

Despite the numerous benefits of disinfection, several studies have indicated there is an association between the byproducts created when disinfectants combine with organic matter in water and the development of cancer in laboratory animals. In 1996 amendments to the SDWA direct the EPA to regulate the creation of disinfection byproducts.

The District's identification of Treatment Plants and DDBP Monitoring Plan presented in this report is in compliance with the Code of Federal Regulations, Title 40, Chapter 1, Section 132, Paragraph (f).

System Overview

The District's water supply system is experiencing considerable growth and change. At the time of this report, the system is currently comprised of 14 operating groundwater wells that tap four distinct aquifer zones. The wells are over 100 feet in depth and, as demonstrated through pumping tests and water quality sampling, are out of the direct influence of surface water.

Figure 1 shows the locations of the District's active production wells and service area boundary.

Recently, the District became a member of the Cascade Water Alliance (CWA), a group comprised of eight municipalities and districts that have joined together to provide water supply to meet current and future demands. In the near future, the District is preparing to purchase water from CWA in order to meet peak demand in the summer months. The source of this water will be from Seattle Public Utilities (SPU) Tolt Reservoir Supply (System ID No. 77050Y, Source No. S02). Tolt water is surface water that SPU treats through the process of ozone disinfection, filtration, and

chlorination. SPU adds fluoride for dental health and Lime/CO_2 for pH adjustment to minimize corrosion.

When connected to this source, the District will blend it with their existing groundwater sources. **Figure 1** shows the locations of the north and south connections to this regional surface water source. The connections are currently under construction and expected to be online around spring of 2005.

Until recently, the District operated their production wells without any treatment. In 2004, the District began chlorinating their groundwater sources and adding fluoride, regardless of the well's depth, quality and separation from surface water influence. The District currently implements this in an effort to maintain consistency in taste and quality within the distribution system when the treated surface water blends with the groundwater sources in 2005.

The multiple groundwater sources each have their own treatment system. **Table 1** provides a summary of treatment at each of the District's ground and surface water sources. The table indicates that, apart from the low chlorine & fluoride free area supplied by District wells 4, 4R, 11.1, and 11.2, the treatment process will be similar at all of the groundwater sources. **Appendix A** presents the DOH source treatment forms detailing the treatment processes in place at each production well.

Table 1 – District Source Treatment Summary

Well	DOH Source #	Source Treatment				
		Chlorination	pH adjustment	Fluoridation	Filtration	Ozonation
1R	S01	x	x	x		
2.1(1)	S02	x	x	x	x	
2.2(1)	S15	x	x	x	x	
10	S11	x	x	x		
7(1)	S06	x	x	x		
8(1)	S07	x	x	x		
9(1)	S13	x	x	x		
SPU South	77050Y - S02	x	x	x	x	x
4	S04	x(2)				
4R	S17	x(2)	x			
11.1(1)	S14	x(2)				
11.2(1)	S12	x(2)				
12R	S16	x		x	x	
13	S09	x		x	x	
14	S10	x		x		
SPU North	77050Y - S02	x	x	x	x	x

Notes:

(1) - Sources are blended and treated at one treatment plant location prior to distribution

(2) - Low chlorine dose for taste and odor control

Source Grouping

Although the District has 14 actively treated groundwater sources, many of these wells tap the same aquifer and can expect to present similar reactions to disinfection and the formation of Disinfection Byproducts (DBPs). The text below presents DOH criteria used to group these 14 wells and future blending of SPU Tolt surface water into the following three Treatment Plants:

Treatment Plant 1 (TP1) Plateau and Cascade View Shallow/Zone II Aquifer blended with SPU water

Treatment Plant 2 (TP2) Intermediate Zone III/Deep Zone IV Aquifers blended with SPU water

Treatment Plant 3 (TP3) Valley Aquifer System blended with SPU water

Well Construction

Table 2 provides a summary of well construction information for each of the District production wells in addition to the designated aquifer (discussed below) each well taps. Complete well log reports for each of the District's wells are included in **Appendix B**.

Table 2 - District Production Well Construction Data

Well	Location	Year Constructed	Wellhead Elevation (ft-msl)	Completion Depth (ft)	Screen Diameter (inches)	Pumping Capacity (gpm)	Aquifer Zone
1R	24100 SE 28th Street	1984	465	137-147	12	500	II
2	25400 SE 31st Place	1968	414	96-116	12	500	II
2.2	25401 SE 31st Place	1996	414	150-175	16	500	II
4	23050 Main Street	1970	352	390-400	12	750	IV
4R	23050 Main Street	2004	352	710-845	12	- (1)	IV
7	6503 East Lake Sammamish Parkway	1984	70	83-147	14	2,000	Valley B
8	6651 East Lake Sammamish Parkway	1984	73	105-179	14	3,500	Valley B
9	940 1st AVE NE	1991	75.5	194-219	24	2,300	Valley C
10	25025 SE 32nd Street	1993	418	135-183	10	700	II
11.1	400 228th AVE SE	1993	355	409-486	6	500	III
11.2	400 228th AVE SE	1993	355	655-880	8	2000	IV
12R	26410 NE 50th Street	1999	645	135-169	12	220	II
13	26002 NE 70th Street	1990	665	865-944	6	170	IV
14	26120 NE 36th Place	1990	475	305-328	8	100	III

Notes;
1 - Pump not installed yet. Pumping test indicates well can sustain a yield of 2,000gpm

Hydrogeology

Several geologic maps and reports describe the surface and subsurface geology tapped by the District's production wells. The USGS Water Resources Investigation Report 94-4082 (USGS, 1995) Geohydrology and Ground-Water Quality of East King County, describes the study area to consist primarily of unconsolidated glacial and interglacial deposits.

The USGS report and investigations conducted by the District indicate the District wells tap the following two distinct aquifer systems:

1 – Plateau & Cascade View Aquifer System

2 – Issaquah Valley Aquifer System

Plateau & Cascade View Aquifer System

Figure 2 is a schematic cross section showing hydrostratigraphic units for the Plateau and Cascade View aquifer system.

Four of the units are designated aquifer zones. These zones are comprised of saturated to partially saturated permeable sand and gravel deposits designated by Roman Numerals, with "I" being the shallowest and "IV" the deepest. Separating these aquifer units are three intervening aquitards of lower permeable sediments that are predominantly clay and silt. These units overlie Tertiary Bedrock comprised predominantly of siltstone, sandstone, and conglomerate. **Table 3** describes these aquifers and the intervening aquitards in detail.

The two uplands (Plateau and Cascade View) share similar stratigraphy, but are separated topographically by Evans and Patterson Creek valleys. The schematic illustrates where these stream valleys truncate the shallower aquifer zones designated I and II.

The District's production wells in this aquifer system tap zones II, III, and IV. There are no District wells completed in Zone I because the aquifer is unconfined in areas, and locally in direct hydraulic connection to Plateau wetlands and surface waters. The aquifer and aquitard geometries are shown with District well locations by east-west **(Figure 3**) and northwest-southeast (**Figure 4**) cross sections through the District's Plateau and Cascade View areas.

Hydraulic Connection

Water level records from monitoring wells completed with multiple piezometers, such as those in PT-3, indicate a significant hydraulic separation between Aquifer Zone II and the deeper zones III and IV (**Figure 5)**. Water level records in monitoring wells completed in both zone III and IV, such as Well 6 show some hydraulic connection (**Figure 6**).

Table 3 - Characteristics of Geohydrologic Units in the Plateau and Cascade View Aquifer System

Geohydrologic Unit	Geohydrologic Unit Label	Aquifer/ Aquitard Zone	Lithologic Characteristics	Location	Hydrologic Characteristics
Alluvium	Qal	-	Consists of unconsolidated silt, sand, and gravel deposited by streams and along lake shores since the end of the Vashon Glaciation. These deposits may range from 1 to 30 or more feet thick.	Snoqualmie and Evans/Patterson Creek Valley and along the Lake Sammamish shoreline.	Highly variable permeability, ranging from moderate to high.
Vashon Recessional Outwash	Qvr	Zone I	Comprises highly permeable unconsolidated sand and gravel deposited by retreating ice of the Vashon Glaciation. These deposits may be up to 70 feet thick in some areas of the Plateau.	Inglewood Channel, North Fork Valley, Central Portions of the Sammamish Plateau and Ames Lake area	Aquifer where saturated, mostly unconfined. Perched conditions occur locally. Examples - Ames, Beaver, Pine &Yellow Lakes
Vashon Till	Qvt	Aquitard	Low permeable, highly consolidated, silty gravel and sandy silt, locally referred to as hardpan. Deposited at the base of the Vashon Ice sheet and compressed by the weight of the overlying glacier. This unit is typically 10 to 30 feet thick and rarely more than 50 feet thick.	It is present at ground surface across much of the upland areas in the model and underlies the recessional outwash in some places on the Plateau.	Confining bed, but can slowly transmit some water vertically and horizontally
Vashon Advance Outwash	Qva	Zone II	Moderately permeable, highly consolidated, silty sand and gravel deposited by meltwater of the advancing Vashon Ice Sheet. The Advance Outwash was compacted after deposition by the overlying glacier. It is commonly 100 to 200 feet thick and can be separated by a discontinuous blue-gray silt that ranges between 10 to 30 feet thick.	Vashon Advance Outwash underlies most of the uplands including, the Plateau and Cascade View/Ames Lake areas. This unit outcrops along the steep slopes around the margins of the upland areas.	Principal aquifer in terms of use. Groundwater mostly confined by the overlying Till

Table 3 - Characteristics of Geohydrologic Units in the Plateau and Cascade View Aquifer System (cont.)

Geohydrologic Unit	Geohydrologic Unit Label	Aquifer/ Aquitard Zone	Lithologic Characteristics	Location	Hydrologic Characteristics
Transitional Beds	Q(A)f / Qtb	Aquitard	Low permeable silt and clay beds typically deposited in lakes prior to the Vashon Glaciation. The transition beds are as thick as 150 feet in the model area.	The transition beds outcrop on the steep slopes along the upland areas where they underlie the Vashon Advance Outwash.	Confining bed, but can yield and transmit water
Olympia Beds	Q(A)c / Qol	Zone III	Moderately permeable sands and gravels interbedded with silt and were deposited by streams during non-glacial times. Formation thickness, where exposed in the upland edges, can be greater than 100 feet.	They outcrop on the steep slopes of the upland areas and extend beneath the uplands and alluvium in the valleys. Known in some areas as the "Sea Level" aquifer because it is commonly present at this elevation	Principal aquifer in terms of use. Groundwater is confined.
Lower fine-grained unit	Q(B)f	Aquitard	Clay, silt, and till with some sand and gravel. Formation thickness can be greater than 200 feet thick	Present beneath the sea level aquifer (Zone III). Believed to underlie Lake Sammamish in most areas.	Confining bed, but can yield and transmit water
Lower coarse-grained unit	Q(B)c	Zone IV upper	Sand and gravel with minor clay and silt. Formation thickness is between 100 and 200 feet in most areas.	Present under central portions of the Sammamish Plateau and north to Union Hill, Cascade View, and Ames Lake areas.	An aquifer where saturated. Groundwater is confined. Tapped by few wells. Known wells are SPWSD 4, and 5
Deepest unconsolidated and undifferentiated deposits	Q(C)	Zone IV lower	Unconsolidated deposits of largely unknown lithology. Formation thickness where found is greater than 200 feet thick	Present under central portions of the Sammamish Plateau and north to Union Hill, Cascade View, and Ames Lake areas.	Hydraulically connected to Zone IV upper. Unit encountered in few wells - NE Samm TW-1, SPWSD 6.2 and 11.2,
Tertiary Bedrock	Br	Base/Boundary	Adesite with minor amounts of basalt and diorite, and some sandstone, siltstone, and conglomerate.	Present at the surface along the eastern (Cascade foothills) and southern (Grand Ridge) boundaries	Water contained in fractures and joints, but most well yields are relatively small.

Table modified from USGS Water Resources Investigations Report 94-4082

Due to the significant hydraulic separation between Zone II and the deeper aquifer zones (III & IV), Zone II wells are grouped into one treatment plant (TP1) for DBP monitoring. Because of their demonstrated hydraulic connection and water quality similarities (demonstrated below), district wells completed in aquifer Zones III and IV will be included into Treatment Plant 2 (TP2) for DBP monitoring.

Valley Aquifer System

During the last glacial advance (between 20,000 and 10,000 years ago), ice entered the Sammamish Valley from the north, reversed the drainage and enlarged ancestral Lake Sammamish. High-energy streams seasonally entered the valley from the east through meltwater channels, such as Inglewood and North Fork channels, and built coarse-grained sand and gravel deltas into the lake. These sediments are interbedded with finer-grained lake silts deposited during cold-season low runoff. These silt layers confine groundwater, acting as aquitards that separate the coarse-grained highly productive aquifers of the valley aquifer system.

The District wells completed in the Issaquah Valley Aquifer System tap zones designated A, B and C. **Figure 7** shows these zones and the District's well completions in a north-south cross section.

The aquitard layers within the Valley Aquifer System are not as thick or extensive as those within the Plateau and Cascade View Aquifer System. As a result, the aquitards provide some hydraulic separation, but allow a greater degree of communication between each of the three zones.

Hydraulic Connection

Figure 8 shows over ten years of water level records for monitoring well VT-1 which the cross-section (**Figure 7**) illustrates has completions in all three valley aquifer zones.

Seasonal water level fluctuations recorded for all three aquifer zones are similar which verify their hydraulic connection. Because of this hydraulic connection and the water quality similarities between each of the aquifer zones (demonstrated below), all three zones are considered as one aquifer and will be represented by Treatment Plant 3 (TP3) for DBP sampling purposes.

Water Quality

The following tables (**Tables 4 through 6**) show water quality parameters specific to those outlined in DOH PUB #331-235 used to support grouping the District's groundwater wells into the three treatment plants identified above. Parameters showing similar levels between the well groupings are highlighted in yellow.

Table 4 - Water Quality Data for Sources Included in Treatment Plant 1

Well	DOH Source #	Aquifer Zone	Temperature Annual Range (Celcius)	pH range	Specific Conductivity (umhos/cm)	Calcium (mg/L)	Magnesium (mg/L)	Iron (mg/L)	Manganese (mg/L)	Sodium (mg/L)	Sulfate (mg/L)	Hardness (mg/L as $CaCO_3$)	Chloride (mg/L)	TOC (mg/L)
1R	S01	II	10.0 - 11.1	6.6-7.1	155	19.2	11	ND	ND	6.5	ND	82	ND	0.7
2.1	S02	II	10.2 - 11.1	6.6-7.1	160	21.6	10	ND	0.034	8.1	7.9	65	5.7	NA
2.2	S15	II	9.8 - 11.1	6.6-7.1	165.5	15	4.8	ND	0.086	5	8	70	3	NA
10	S11	II	10.2 - 11.1	7.0-8.3	130	15.2	5.4	ND	ND	4.3	ND	60	ND	NA
12R	S16	II	9.7-11.0	6.6-7.0	154	23	8.5	ND	0.135	8.2	26.3	90	ND	NA
SPU	?	-	5.0-20	7.9-8.3	67.3	28.2	0.4	0.014	ND	1.11	1.4	29.9	2.5	1.08

Notes

1 - Water Quality results collected from Table 3-5 of SPWSD Comprehensive Plan and additional samples collectedf from 1994 through 2004 for ASR pilot testing.

- Water Quality results showing similarities within designated treatment plant group

NA - Not Analyzed

Table 5 – Water Quality Data for Sources Included in Treatment Plant 2

Well	DOH Source #	Aquifer Zone	Temperature Annual Range (Celcius)	pH	Specific Conductivity (umhos/cm)	Calcium (mg/L)	Magnesium (mg/L)	Iron (mg/L)	Manganese (mg/L)	Sodium (mg/L)	Sulfate (mg/L)	Hardness (mg/L as $CaCO_3$)	Chloride (mg/L)	TOC (mg/L)
4	S04	IV	9.2 - 11.7	7.3-8.2	146	18	4.2	ND	0.05	7.4	ND	61	ND	NA
4R	S17	IV	9.2 - 11.7	7.3-8.2	156	18	3.8	ND	0.03	6	ND	61	ND	NA
11.1	S14	III	10.1-12	7.0-7.8	162	19	5.7	0.25	ND	6.7	3.6	77	2.3	NA
11.2	S12	IV	10-11.7	7.5-8.6	148	18	6	ND	0.03	6.7	1	70	2	NA
13	S09	IV	NA	7.8-8.4	155	17	5.8	ND	0.05	9.6	ND	67.5	ND	NA
14	S10	III	NA	7.6	140	11	4.4	ND	0.05	6.8	21	45	ND	NA
SPU	?	-	5.0-20	7.9-8.3	67.3	28.2	0.4	0.014	ND	1.11	1.4	29.9	2.5	1.08

Notes

1 - Water Quality results collected from Table 3-5 of SPWSD Comprehensive Plan and additional samples collectedf from 1994 through 2004 for ASR pilot testing.

- Water Quality results showing similarities within designated treatment plant group

NA - Not Analyzed

Table 6 – Water Quality Data for Sources Included in Treatment Plant 3

Well	DOH Source #	Aquifer Zone	Temperature Annual Range (Celcius)	pH	Specific Conductivity (umhos/cm)	Calcium (mg/L)	Magnesium (mg/L)	Iron (mg/L)	Manganese (mg/L)	Sodium (mg/L)	Sulfate (mg/L)	Hardness (mg/L as $CaCO_3$)	Chloride (mg/L)	TOC (mg/L)
7	S06	Valley B	9.8-13.9	6.5-6.9	170	15	6.5	ND	ND	8.2	8.7	73	ND	NA
8	S07	Valley B	10.1-13.9	6.4-7.0	180	15	7	ND	ND	9.7	7.7	76	ND	NA
9	S13	Valley C	10.1-13.9	6.5-7.1	160	16	5.4	ND	ND	8.5	7	68	ND	NA
SPU	?	-	5.0-20	7.9-8.3	67.3	28.2	0.4	0.014	ND	1.11	1.4	29.9	2.5	1.08

Notes

1 - Water Quality results collected from Table 3-5 of SPWSD Comprehensive Plan and additional samples collectedf from 1994 through 2004 for ASR pilot testing.

- Water Quality results showing similarities within designated treatment plant group

NA - Not Analyzed

The tables generally indicate the wells grouped into the three treatment plants draw from the same aquifer, or aquifers with similar water characteristics. Given the similarities shown in natural water quality it is likely that the grouped wells will have similar reaction to treatment and blending with SPU surface water in the formation of DBPs. [1]

Treatment Plant Identification

Table 7 lists the District's production wells that currently supply their service area including the SPU connection proposed to blend with these sources in the future. Based on the District's distribution system and the criteria addressed above, the table identifies the source groups for each of the three identified Treatment Plants. DDBP monitoring for these treatment plants is describe in the following section and will provide the best representation of DBP formation from the treated groundwater and

[1] Some exceptions are due to localized water quality characteristics.

surface water sources managed by the District under the Stage I DDBP rule (40 CFR 141.132(b)).

Table 7 – SPWSD System Sources and Associated Treatment Plants

Well	DOH Source #	Aquifer Zone (2)	Treatment Plant (3)
1R	S01	Shallow (Zone II)	TP-1
2.1	S02		
2.2	S15		
10	S11		
12R	S16		
4	S04	Deep (Zone IV)	TP-2
4R	S17		
11.1(1)	S14	Intermediate (Zone III)	
11.2(1)	S12	Deep (Zone IV)	
13	S09		
14(4)	S10	Intermediate (Zone III)	
7(2)	S06	Valley Aquifer System	TP-3
8(2)	S07		
9(2)	S13		
SPU South	(77050Y-S02)		TP-1 & TP-2 (5)
SPU North	(77050Y-S02)		TP-1 & TP-3 (5)

Notes:

(1) - Sources are blended and treated at one treatment plant location prior to distribution

(2) - Known productive hydrostratigraphic zones that comprise the Plateau and Valley Aquifer systems

(3) - Designated Treatment Plants based on similarities in Well Construction, Geology and Water Quality

(4) - Well 14 is rarely pumped, a majority of it's water rights were transferred to other nearby, more productive wells

(5) - SPU water will be blended with groundwater sources grouped into the identified treatment plants

Part 2
DDBP Monitoring Plan

System Name: **Sammamish Plateau Water & Sewer District**
PWSID#: **409009**
Type of System: **Groundwater and future SPU Tolt Surface Water**
Population of System: **>10,000**
Date: **12/22/04**
Completed by: **SPWSD & CDM**

The District' DDBP monitoring plan is maintained and available for review by DOH and the general public. The plan complies with the requirements outlined in the Code of Federal Regulations, Title 40, Chapter 1, Section 132, Paragraph (f) which includes the following:

- Specific locations and schedules for collecting the DDBP parameters that represent the entire distribution system.

- A description on how the compliance is calculated with regard to treatment technique, maximum contaminant levels (MCLs) and maximum residual disinfectant levels (MRDLs).

Part 1 above presents the information and analysis for grouping District well sources and future SPU surface water blending into three identified treatment plants. **Table 8** presents a summary of these treatment plants and associated wells. Treated SPU Tolt surface water will blend with all of the well groups and shows as a source for all three treatment plants.

Table 8 - Treatment Plant Sources

Treatment Plant	Sources
TP1	1(S01), 2.1(S02), 2.2 (S15), 10 (S11), 12R (S16) & SPU Tolt Water
TP2	4(S04), 4R(S17), 11.1(S14), 11.2(S12), 13(S09), 14(S10) & SPU Tolt Water
TP3	7(S06), 8(S07), 9(S13) & SPU Tolt Water

Disinfection Monitoring and Compliance

- The District and CWA/SPU, when connected, will work together to ensure compliance with sample collection, analysis, and report submittal to DOH. SPU will continue to analyze and report sampling results to DOH before the Tolt water is delivered to the District's service connection.

- **Figure 9** shows the locations of the District's current coliform sampling stations. The District will monitor the 60 stations over a one month period. Each week the District samples a select group of the 60 stations based on the following color code on the map:

  Green – Week 1
  Yellow – Week 2
  Blue – Week 3
  Red – Week 4

As shown, the station groups are widely distributed throughout the District's service area for representative system sampling every week.

For disinfection monitoring, the District will analyze chlorine residuals and pH levels in the field when each of the coliform samples are collected. The District will tabulate and submit this field data using the DOH Distribution System Report Form with the laboratory coliform results to DOH within 10 days of the end of the reporting month. An example of this form is included in **Appendix B**.

Maximum contaminant level (MCL) compliance of disinfection residuals will be based on a running annual average (RAA) over the past 12 months. MRDL for chlorine and chloramines is 4.0 mg/L. However, the District expects to maintain a residual no more than 0.2 mg/L.

Byproduct Monitoring and Compliance

As with the Disinfection monitoring, SPU will continue to analyze and report sampling results to DOH for MCL compliance of Total Trihalomethanes (TTHM), the five Haloacetic Acids (HAA5), and Bromate formation before delivering Tolt water to the District's service connection. The District will sample for TTHM, HAA5, Bromide, and TOC quarterly at the sampling stations shown on **Figure 9** for each treatment plant. **Table 9** lists the Treatment plants and the representative sample stations where DBP monitoring will occur.

Table 9 – DBP Monitoring Stations and Schedule

Treatment Plant	TTHM & HAA5 Sampling Station (1)	Residence	Sampling Schedule
TP1	24	Average	Quarterly - Jan, April, July, Oct
	26	Average	Quarterly - Jan, April, July, Oct
	27	Average	Quarterly - Jan, April, July, Oct
	46	Maximum	Quarterly - Jan, April, July, Oct
	2	Maximum	Quarterly - Jan, April, July, Oct
TP2	6	Average	Quarterly - Jan, April, July, Oct
	3	Average	Quarterly - Jan, April, July, Oct
	17	Average	Quarterly - Jan, April, July, Oct
	53	Maximum	Quarterly - Jan, April, July, Oct
TP3	1	Average	Quarterly - Jan, April, July, Oct
	18	Average	Quarterly - Jan, April, July, Oct
	30	Average	Quarterly - Jan, April, July, Oct
	48	Maximum	Quarterly - Jan, April, July, Oct

Notes:
1 - See figure 9 for sampling station location

As discussed in Part 1, the District expects DBP formation for Well 12, completed in the shallow aquifer in the Cascade View area, to be similar and represented by the stations supplied by wells completed in the shallow aquifer on the Plateau. However, the District will collect an extra sample representing maximum residence time (MRT) for Treatment Plant 1 (TP1) in this area to cover possible differences in reaction to treatment and future blending of SPU surface water from the north connection. The sampling station (Station #2) is located at the Well 12R storage tank.

The District will summarize and submit analytical results of the 13 samples to DOH in quarterly reports that will include:

- Sample date and location for DBP results
- Quarterly arithmetic average
- Running annual averages for HAA5 and TTHM based on the previous four quarters for each source (RAA of quarterly averages that exceed the MCL are in violation)
- Whether or not results exceed the MCL for each DDBP parameter as shown on **Table 10**.

Table 10 – MRDLs and MCLs for the Stage 1 D/DBP Rule

Disinfectant	MRDL	MCL	MCLGs	Based on
Chlorine	4.0 mg/L			**Running Annual Average**
Disinfectant Byproduct				
HAA5		**0.060 mg/L**		**Running Annual Average**
Monochloroacetic acid			-	
Dichloroacetic acid			0.00	
Trichloroacetic acid			0.30 mg/L	
Monobromoacetic acid			-	
Dibromoacetic acid			-	
TTHM		**0.080 mg/L**		**Running Annual Average**
Bromodichloromethance				
Dibromochloromethane				
Tribromomethane (Bromoform)				
Trichloromethane (Chloroform)				
Bromate		**0.010 mg/L**	0.00	**Running Annual Average**

Notes:
MRDL - Maximum Residual Disinfectant Level
MCL - Maximum Contaminant Level
MCLGs - Maximum Contaminant Level Goals

Reduced Monitoring Qualifications

For conservative purposes and until more sophisticated modeling of the distribution system is performed, the District will consider surface water to be present within the system to some degree throughout the year and will comply with the reduced monitoring criteria for surface water sources, even though the source water present in the Distribution system during the late spring, summer and early fall seasons will be mainly groundwater.

Table 11 shows the criteria necessary for the Department of Health to consider the District qualified for reduced monitoring. If the District meets these criteria they may apply to reduce DBP monitoring to 1 sample, per treatment plant, per year. This will reduce monitoring efforts from 52 samples collected annually for both THM and HAA5 to 13.

Table 11 also shows TOC monitoring and reduction criteria. The District will collect monthly treated source water TOC (a DBP precursor) and Bromate, a potential DBP contaminant created from SPU ozone treatment. The District will obtain both TOC and Bromide levels from Seattle Public Utilities for calculating running annual averages and quarterly samples at each of the two interties to determine if they qualify for reduced TOC and Bromate monitoring.

Table 11 – Reduced Monitoring

Parameter	Criteria	Standard Monitoring Frequency	Reduced Frequency
Chlorine Residuals	No Reductions Allowed	Monthly	Not Applicable
TTHM and HAA5	< or = 50% MCLs (RAA) & TOC < or = 4.0 mg/L (RAA)	4/plant/QTR (TTHM & HAA5)	1/plant/QTR
TOC	TOC < 1.0 mg/L 1YR TOC < 2.0 mg/L 2 YRS	Monthly (RAA) (obtained from SPU) Checked Quarterly at Interties	1/plant/QTR
Bromate	Bromide < 0.05 mg/L 1YR	Monthly (RAA) (obtained from SPU) Checked Quarterly at Interties	1/plant/QTR

Distribution

2 Copies	Office of Drinking Water - NW Regional Office Washington State Department of Health 20435 72nd Ave S Kent, WA 98032 Attention: Jolyn Leslie, PE, Regional Engineer
2 Copies	Sammamish Plateau Water and Sewer District 1510 228th Ave SE Sammamish, WA 98027 Attention: Ron Little, PE, Manager

Figures

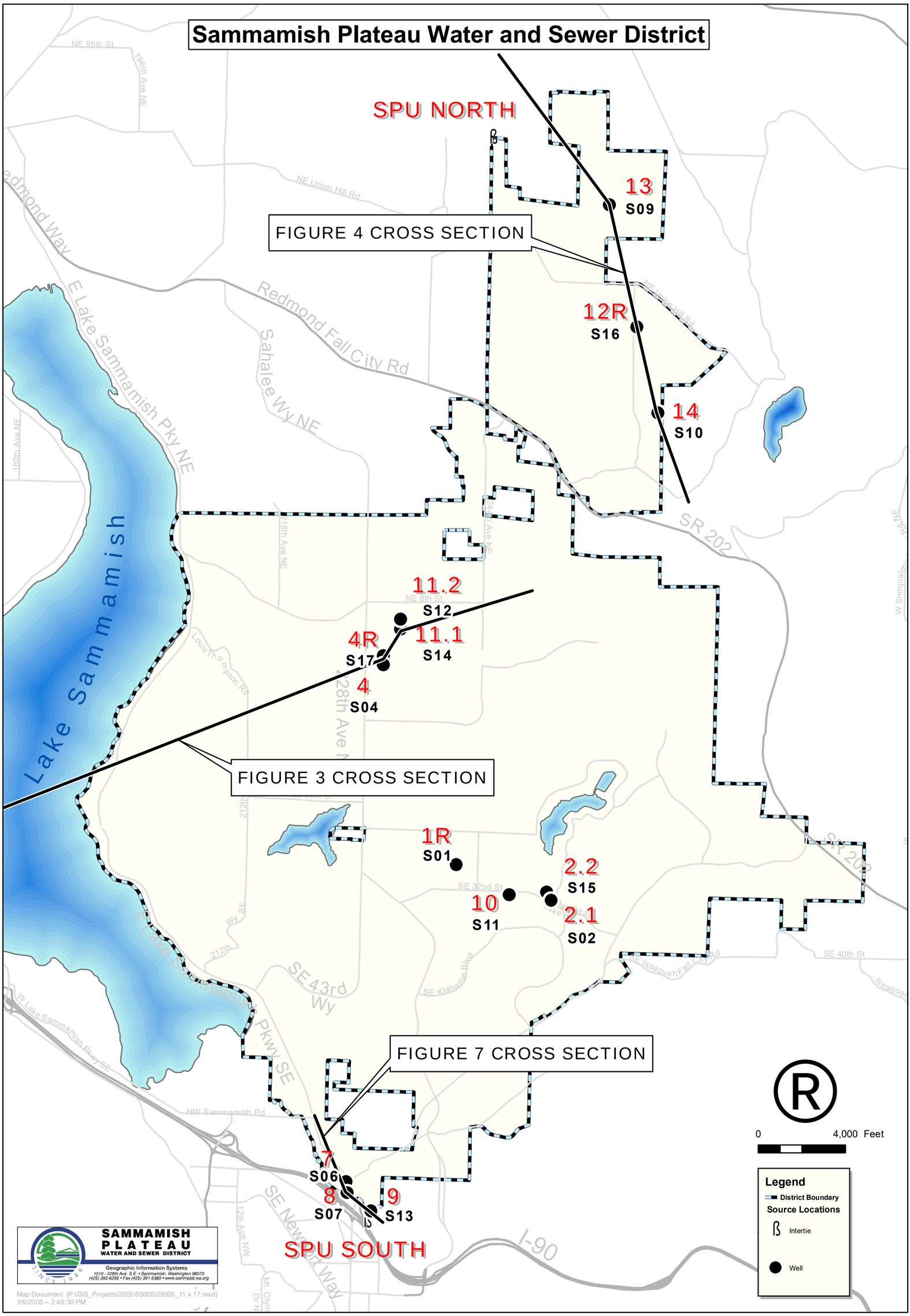

Figure 1
District Sources Treatment Locations

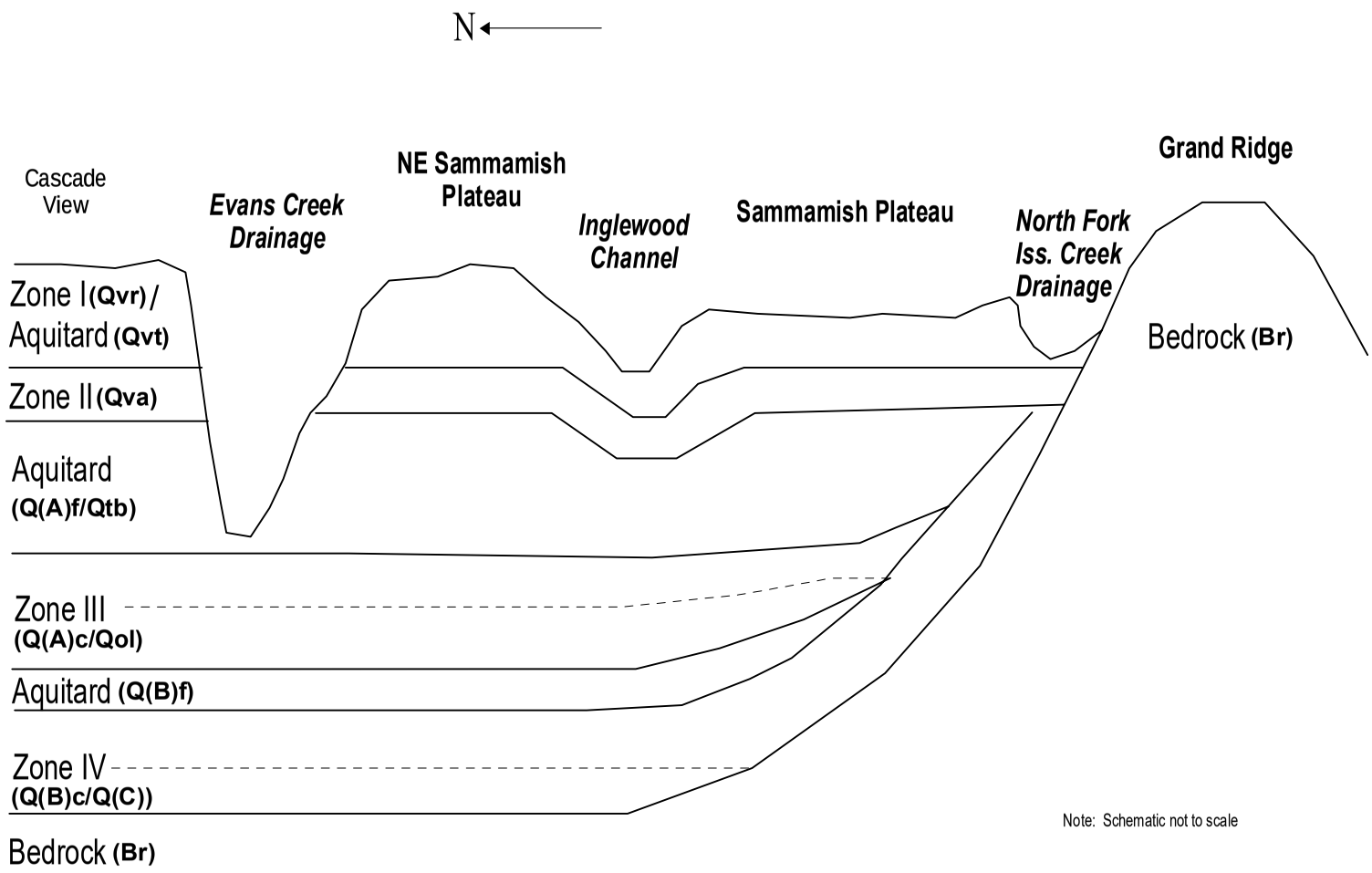

CDM

Figure 2
Schematic Cross Section
Plateau and Cascade View Aquifer System

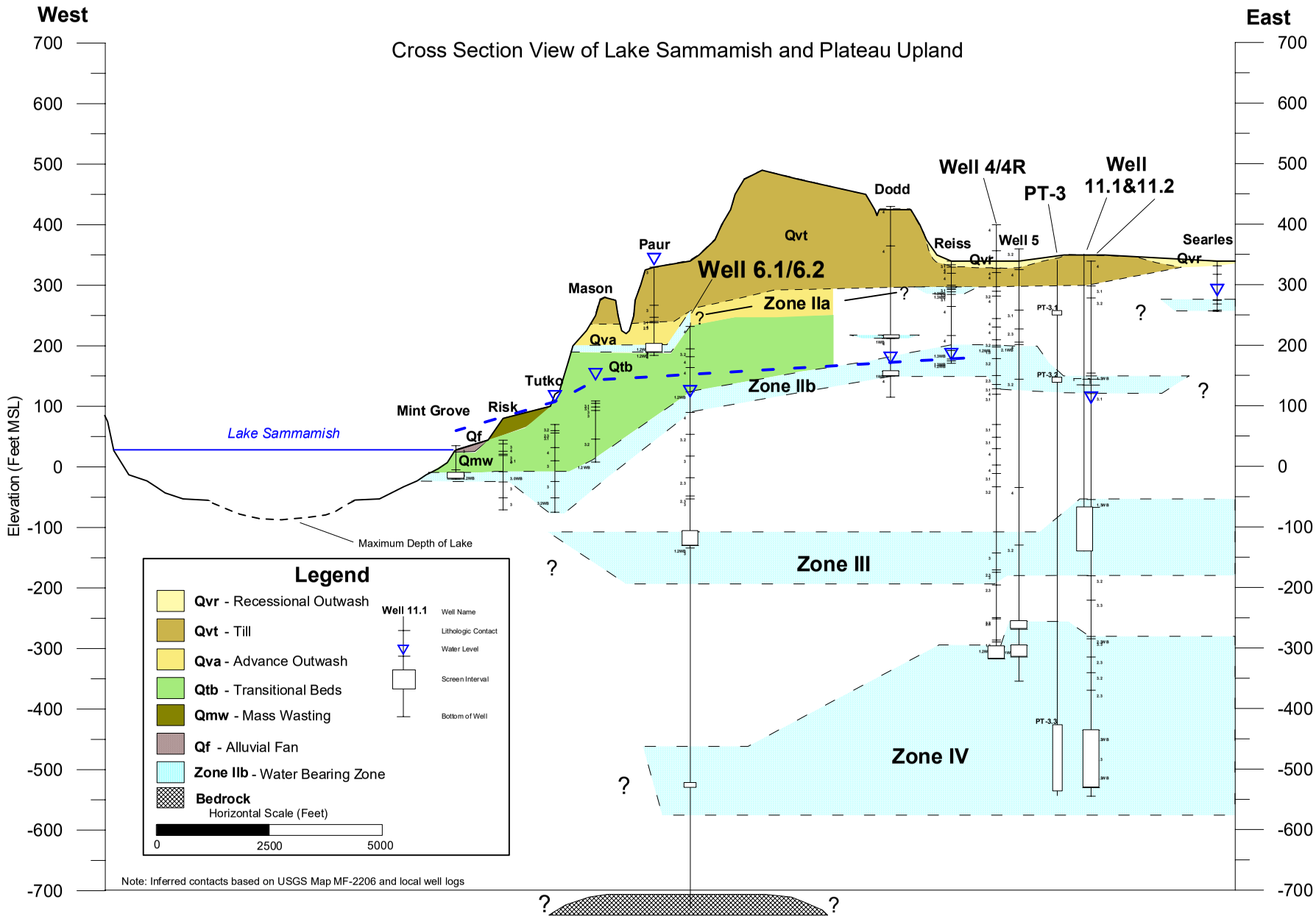

CDM

Figure 3
West - East Plateau Cross Section

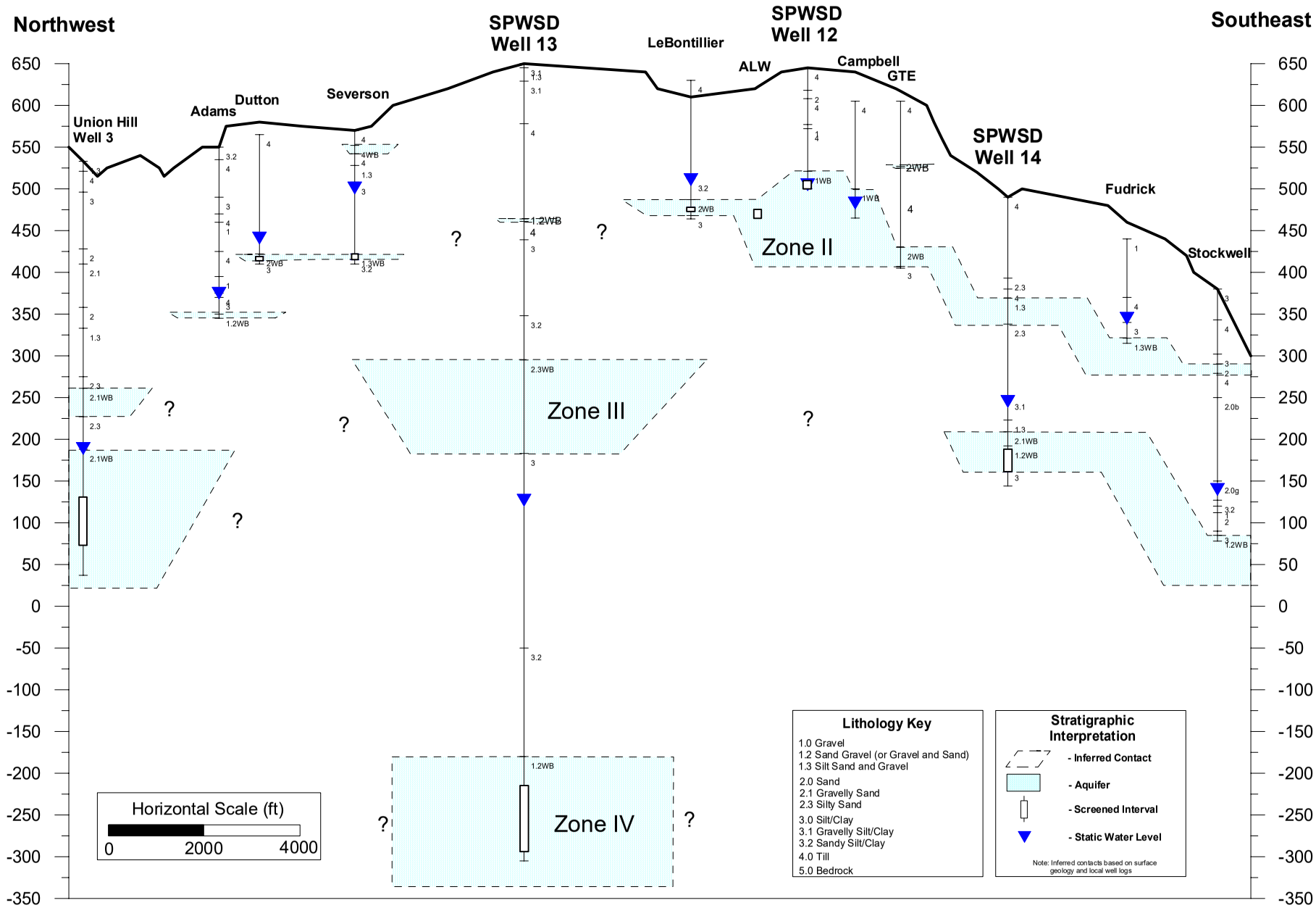

CDM

Figure 4
Northwest-Southeast
Cascade View Cross Section

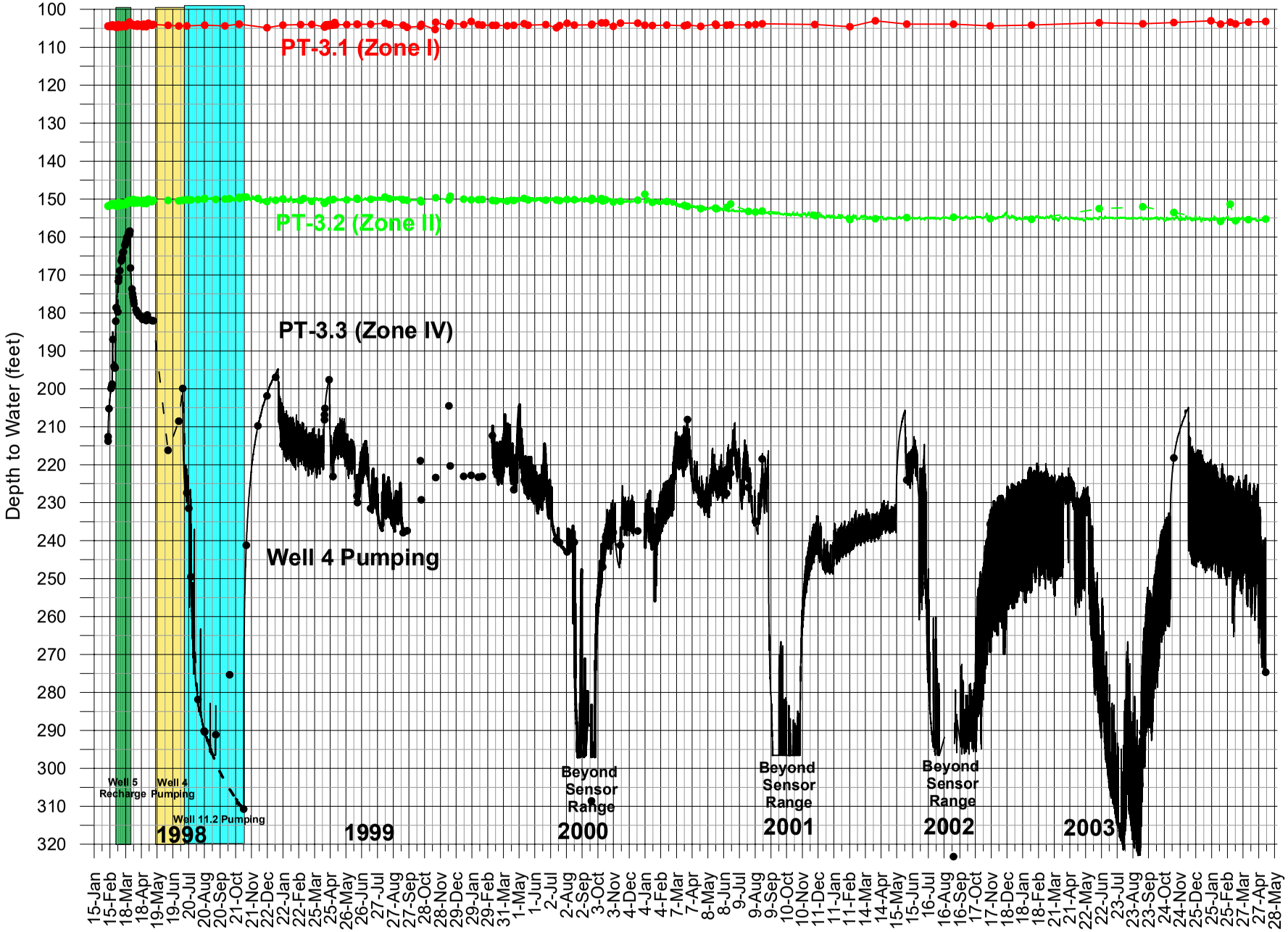

CDM

Figure 5
PT-3 Long-Term Hydrograph

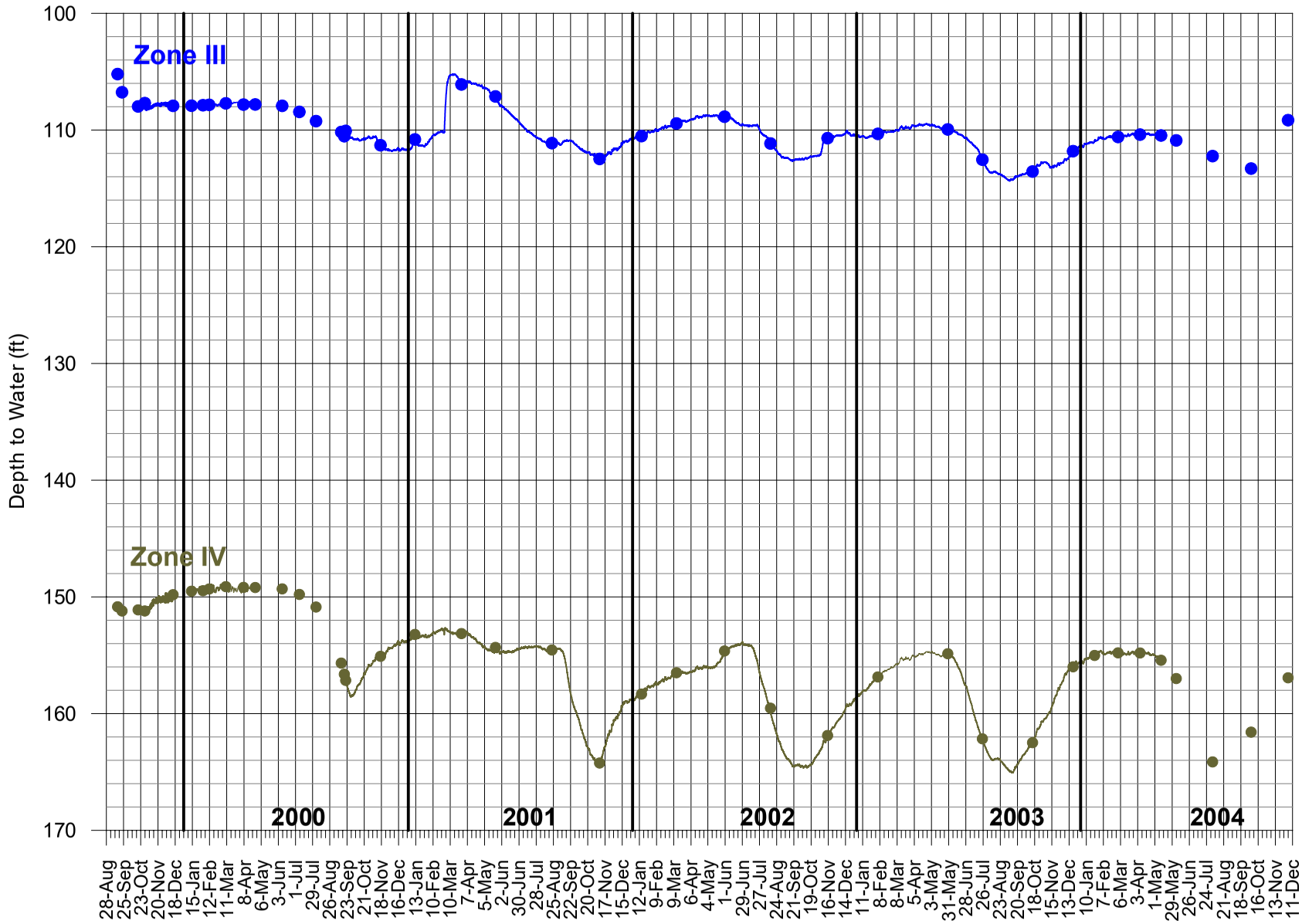

CDM

Figure 6
Well 6 Long-Term Hydrograph

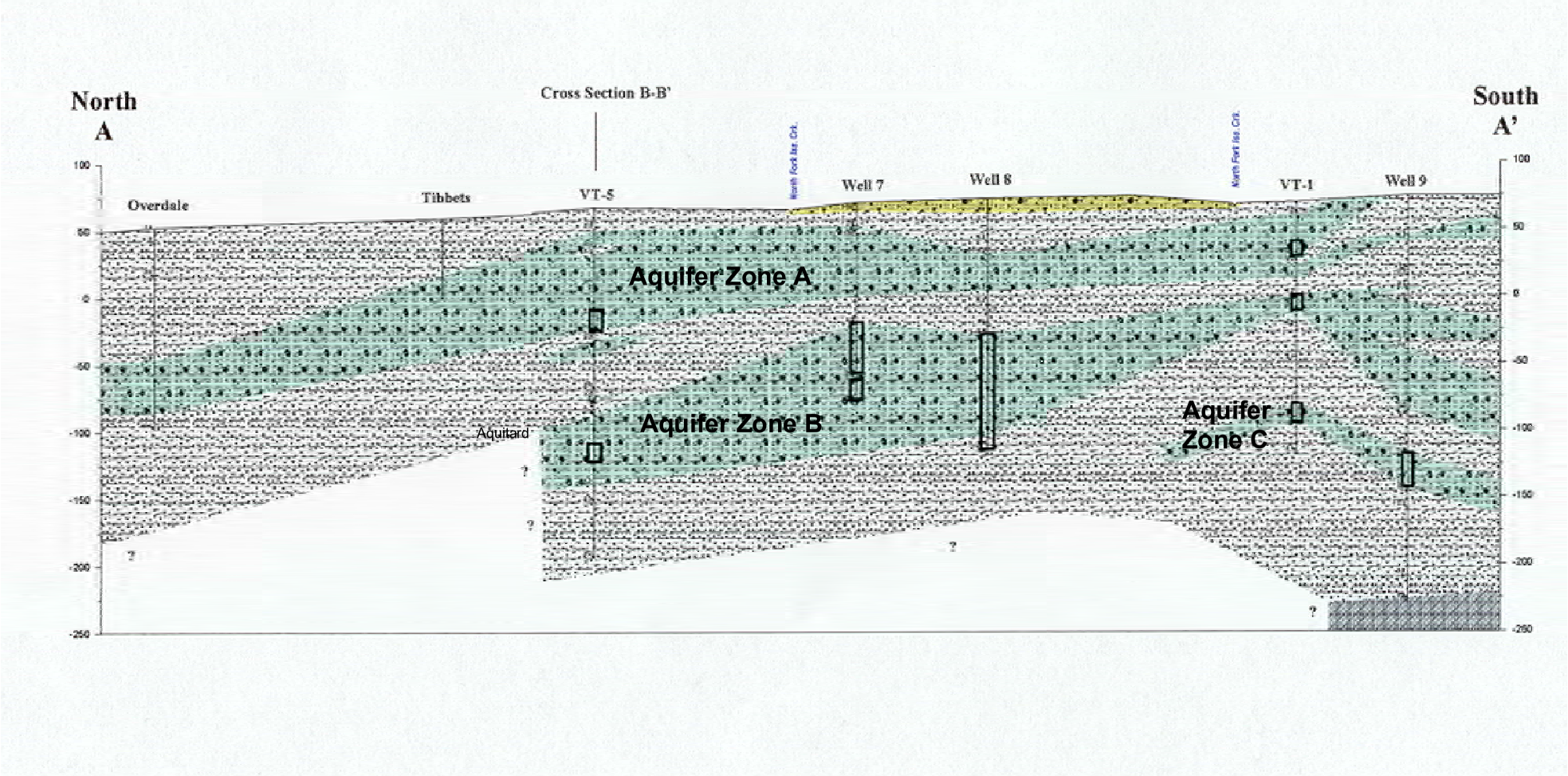

CDM

Figure 7
North-South
Valley Aquifer System Cross Section

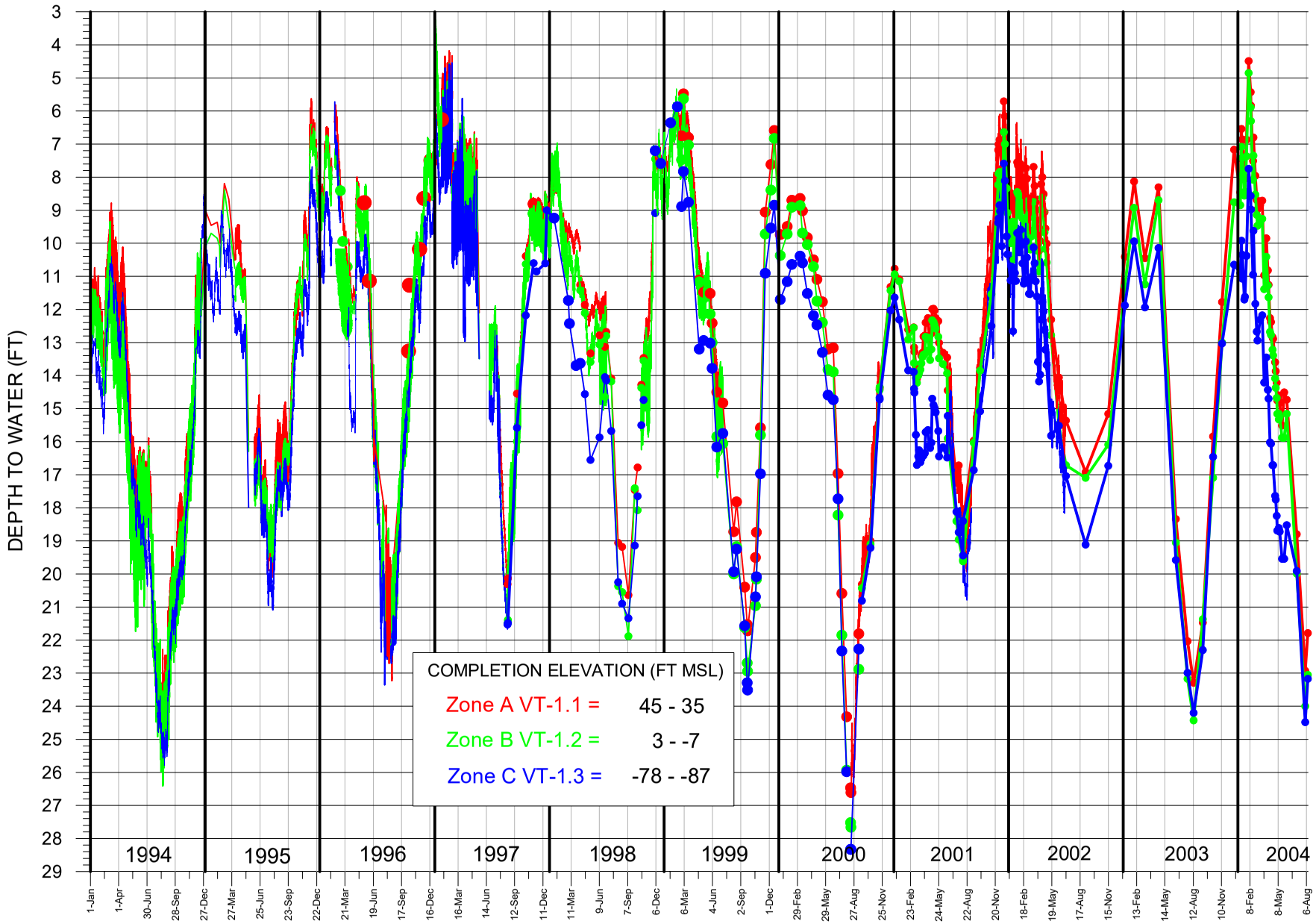

CDM

Figure 8
VT-1 Long-Term Hydrograph

This page intentionally left blank.

Sammamish Plateau Water and Sewer District

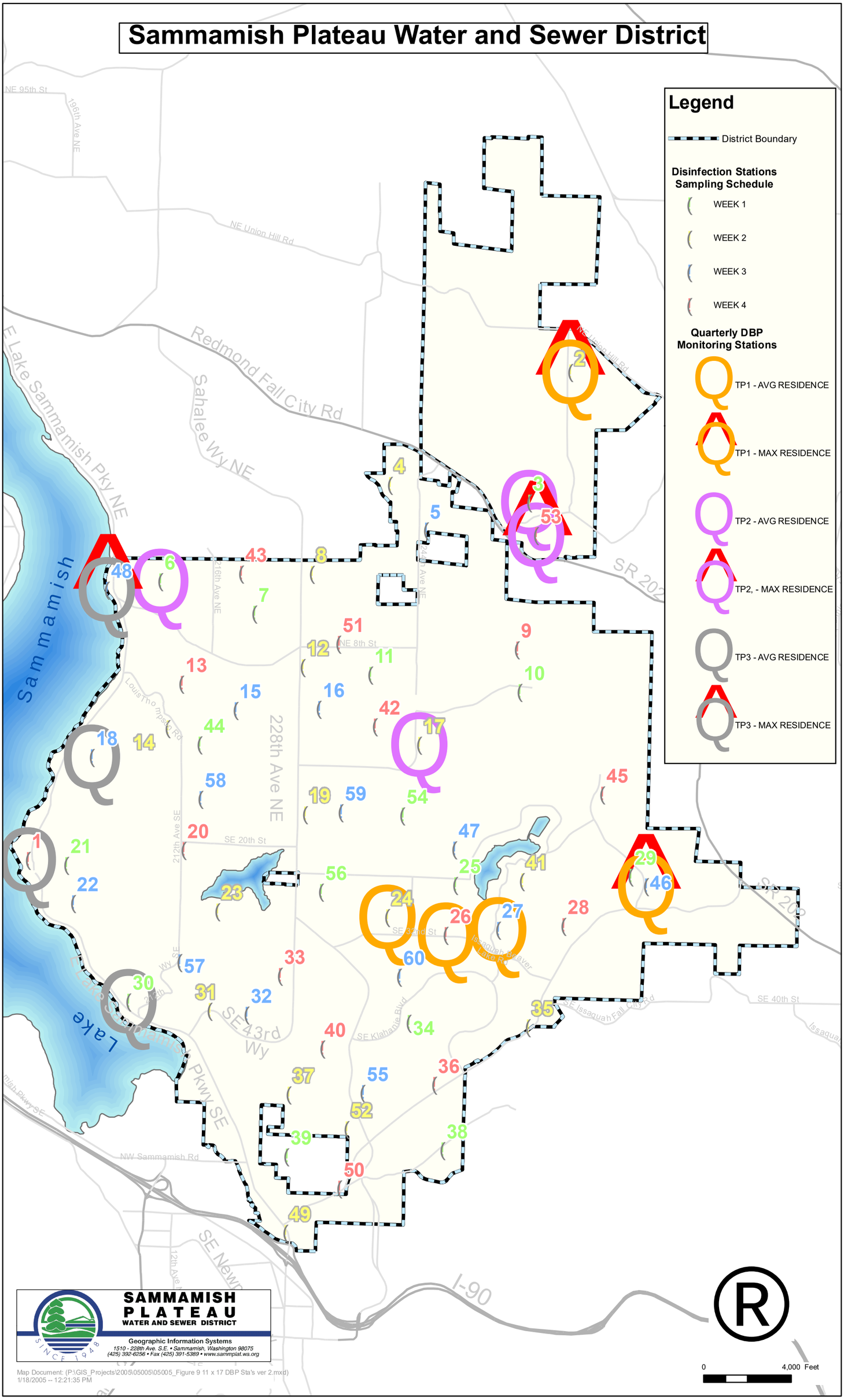

Figure 9
DBP Monitoring Stations and Schedules

Sammamish Plateau Water and Sewer District

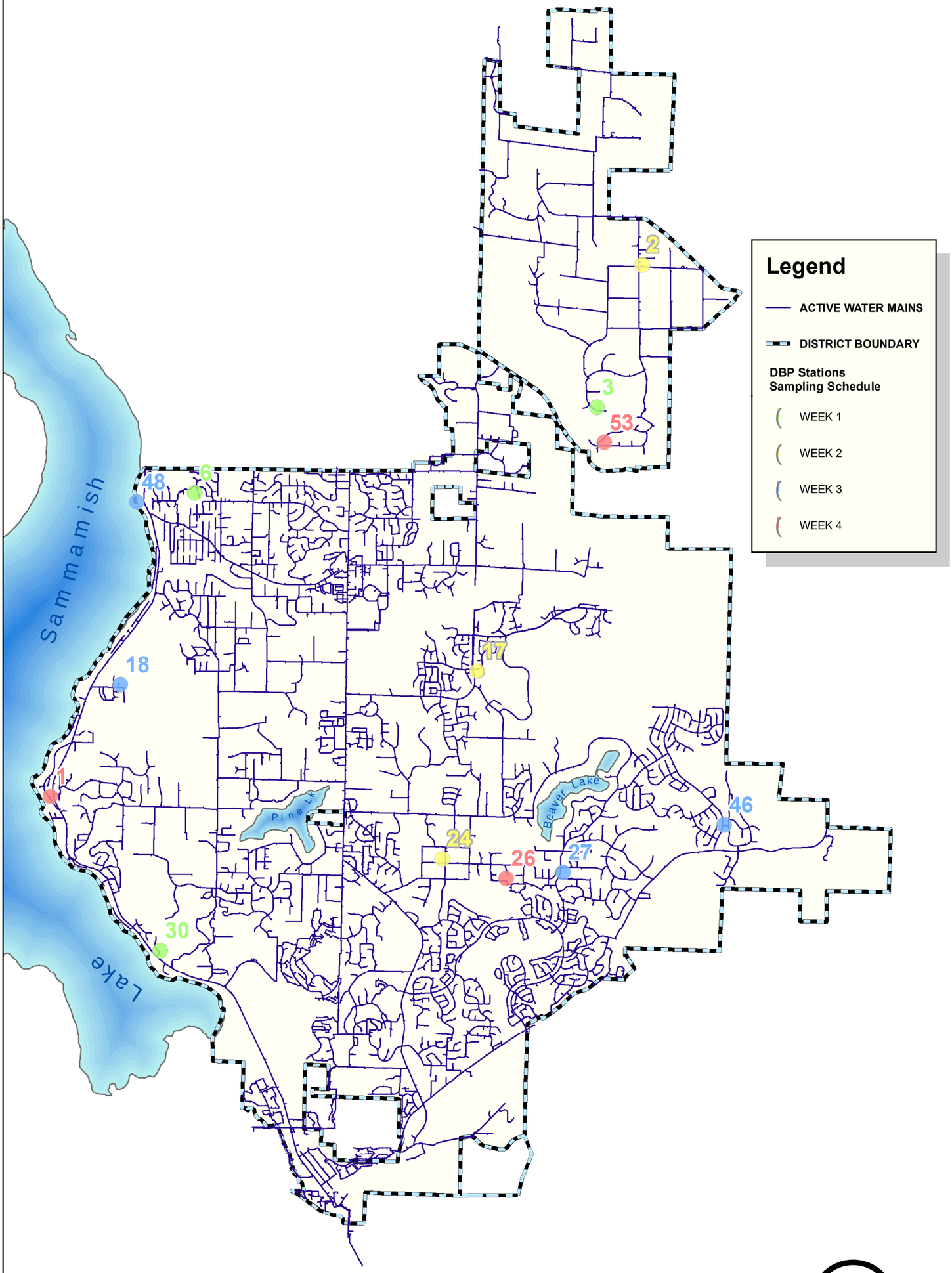

SAMMAMISH PLATEAU
WATER AND SEWER DISTRICT
SINCE 1948
Geographic Information Systems
1510 - 228th Ave. S.E. • Sammamish, Washington 98075
(425) 392-6256 • Fax (425) 391-5389 • www.sammplat.wa.org

Map Document: (P:\GIS_Projects\2005\05005\05005_Figure 10 11 x 17 DBP Sta's ver2.mxd)
4/28/2005 -- 2:51:38 PM

0 4,000 Feet

Figure 10
DBP Monitoring Stations and Water Mains

Appendix A
DOH Source Treatment Forms

Source Treatment – Sammamish Plateau

Source Name: Well 1R
Source Number: (S01)

Process	A	B	C	D	E	F	G	H	I	J	
CHLORAMINES											
CHLORINATION, GASEOUS											
CHLORINATION, HYPOCHLORITE	x										On-Site Electrolytic Chlorination up to 0.8%
CHLORINE DIOXIDE											
IODINATION											
OZONATION											
ULTRAVIOLET RADIATION											
RAPID MIX/IN-LINE BLENDER											
COAGULATION											
FLOCCULATION											
SEDIMENTATION											
FILTRATION, CARTRIDGE											
FILTRATION, DIATOMACEOUS EARTH											
FILTRATION, GREENSAND											
FILTRATION, PRESSURE SAND											
FILTRATION, RAPID SAND											
FILTRATION, SLOW SAND											
PH ADJUSTMENT									x		NaOH
ION EXCHANGE											
LIME-SODA SOFTENING											
AERATION/AIR STRIPPING											
PERMANGANATE											
ACTIVATED CARBON, GRANULAR											
ACTIVATED CARBON, POWDERED											
REVERSE OSMOSIS											
DISTILLATION											
ELECTRODIALYSIS											
SEQUESTRATION											
CORROSION INHIBITORS - PHOSP/SILICA											
FLUORIDATION										x	Operating last quarter of 2004
REDUCING AGENTS - SULFUR COMPOUNDS											
SLUDGE TREATMENT											
OTHER PROCESSES/OBJECTIVES											

A = DISINFECTION
B = PARTICULATE (TURBIDITY) REMOVAL
C = SOFTENING (HARDNESS REMOVAL)
D = IRON & MANGANESE REMOVAL
E = ORGANICS AND COLOR REMOVAL
F = TASTE/ODOR CONTROL & DECHLORINATION
G = DISINFECTON BY-PRODUCTS CONTROL
H = INORGANICS REMOVAL
I = CORROSION CONTROL
J = DENTAL HEALTH

Source Treatment – Sammamish Plateau

Source Name: Well 2
Source Number: (S02)

Process	A	B	C	D	E	F	G	H	I	J
CHLORAMINES										
CHLORINATION, GASEOUS										
CHLORINATION, HYPOCHLORITE	X			X						On-Site Electrolytic Chlorination up to 0.8%
CHLORINE DIOXIDE										
IODINATION										
OZONATION										
ULTRAVIOLET RADIATION										
RAPID MIX/IN-LINE BLENDER										
COAGULATION										
FLOCCULATION										
SEDIMENTATION										
FILTRATION, CARTRIDGE										
FILTRATION, DIATOMACEOUS EARTH										
FILTRATION, GREENSAND										
FILTRATION, PRESSURE SAND				X						Post Chlorination
FILTRATION, RAPID SAND										
FILTRATION, SLOW SAND										
PH ADJUSTMENT									X	NaOH
ION EXCHANGE										
LIME-SODA SOFTENING										
AERATION/AIR STRIPPING										
PERMANGANATE										
ACTIVATED CARBON, GRANULAR										
ACTIVATED CARBON, POWDERED										
REVERSE OSMOSIS										
DISTILLATION										
ELECTRODIALYSIS										
SEQUESTRATION										
CORROSION INHIBITORS - PHOSP/SILICA										
FLUORIDATION									X	Operating Last Quarter of 2004
REDUCING AGENTS - SULFUR COMPOUNDS										
SLUDGE TREATMENT										
OTHER PROCESSES/OBJECTIVES										

A = DISINFECTION
B = PARTICULATE (TURBIDITY) REMOVAL
C = SOFTENING (HARDNESS REMOVAL)
D = IRON & MANGANESE REMOVAL
E = ORGANICS AND COLOR REMOVAL
F = TASTE/ODOR CONTROL & DECHLORINATION
G = DISINFECTON BY-PRODUCTS CONTROL
H = INORGANICS REMOVAL

Source Treatment – Sammamish Plateau

Source Name: Well 2.2 (a.k.a. 2R)
Source Number: (S14)

Process	A	B	C	D	E	F	G	H	I	J
CHLORAMINES										
CHLORINATION, GASEOUS										
CHLORINATION, HYPOCHLORITE	X			X						On-Site Electrolytic Chlorination up to 0.8%
CHLORINE DIOXIDE										
IODINATION										
OZONATION										
ULTRAVIOLET RADIATION										
RAPID MIX/IN-LINE BLENDER										
COAGULATION										
FLOCCULATION										
SEDIMENTATION										
FILTRATION, CARTRIDGE										
FILTRATION, DIATOMACEOUS EARTH										
FILTRATION, GREENSAND										
FILTRATION, PRESSURE SAND				X						Post Chlorination
FILTRATION, RAPID SAND										
FILTRATION, SLOW SAND										
PH ADJUSTMENT									X	NaOH
ION EXCHANGE										
LIME-SODA SOFTENING										
AERATION/AIR STRIPPING										
PERMANGANATE										
ACTIVATED CARBON, GRANULAR										
ACTIVATED CARBON, POWDERED										
REVERSE OSMOSIS										
DISTILLATION										
ELECTRODIALYSIS										
SEQUESTRATION										
CORROSION INHIBITORS - PHOSP/SILICA										
FLUORIDATION									X	Operating Last Quarter of 2004
REDUCING AGENTS - SULFUR COMPOUNDS										
SLUDGE TREATMENT										
OTHER PROCESSES/OBJECTIVES										

A = DISINFECTION
B = PARTICULATE (TURBIDITY) REMOVAL
C = SOFTENING (HARDNESS REMOVAL)
D = IRON & MANGANESE REMOVAL
E = ORGANICS AND COLOR REMOVAL
F = TASTE/ODOR CONTROL & DECHLORINATION
G = DISINFECTON BY-PRODUCTS CONTROL
H = INORGANICS REMOVAL

Source Treatment – Sammamish Plateau

Source Name: Well 10
Source Number: (S11)

Process	A	B	C	D	E	F	G	H	I	J	
CHLORAMINES											
CHLORINATION, GASEOUS											
CHLORINATION, HYPOCHLORITE	X										On-Site Electrolytic Chlorination up to 0.8%
CHLORINE DIOXIDE											
IODINATION											
OZONATION											
ULTRAVIOLET RADIATION											
RAPID MIX/IN-LINE BLENDER											
COAGULATION											
FLOCCULATION											
SEDIMENTATION											
FILTRATION, CARTRIDGE											
FILTRATION, DIATOMACEOUS EARTH											
FILTRATION, GREENSAND											
FILTRATION, PRESSURE SAND											
FILTRATION, RAPID SAND											
FILTRATION, SLOW SAND											
PH ADJUSTMENT									X		NaOH
ION EXCHANGE											
LIME-SODA SOFTENING											
AERATION/AIR STRIPPING											
PERMANGANATE											
ACTIVATED CARBON, GRANULAR											
ACTIVATED CARBON, POWDERED											
REVERSE OSMOSIS											
DISTILLATION											
ELECTRODIALYSIS											
SEQUESTRATION											
CORROSION INHIBITORS - PHOSP/SILICA											
FLUORIDATION										X	Operating Last Quarter of 2004
REDUCING AGENTS - SULFUR COMPOUNDS											
SLUDGE TREATMENT											
OTHER PROCESSES/OBJECTIVES											

A = DISINFECTION
B = PARTICULATE (TURBIDITY) REMOVAL
C = SOFTENING (HARDNESS REMOVAL)
D = IRON & MANGANESE REMOVAL
E = ORGANICS AND COLOR REMOVAL
F = TASTE/ODOR CONTROL & DECHLORINATION
G = DISINFECTON BY-PRODUCTS CONTROL
H = INORGANICS REMOVAL
I = CORROSION CONTROL
J = DENTAL HEALTH

Source Treatment – Sammamish Plateau

Source Name: Well 4
Source Number: (S04)

Process	A	B	C	D	E	F	G	H	I	J	
CHLORAMINES											
CHLORINATION, GASEOUS											
CHLORINATION, HYPOCHLORITE	X					X					H2S Removal Sodium Hypochlorite 12.5%
CHLORINE DIOXIDE											
IODINATION											
OZONATION											
ULTRAVIOLET RADIATION											
RAPID MIX/IN-LINE BLENDER											
COAGULATION											
FLOCCULATION											
SEDIMENTATION											
FILTRATION, CARTRIDGE											
FILTRATION, DIATOMACEOUS EARTH											
FILTRATION, GREENSAND											
FILTRATION, PRESSURE SAND											
FILTRATION, RAPID SAND											
FILTRATION, SLOW SAND											
PH ADJUSTMENT											
ION EXCHANGE											
LIME-SODA SOFTENING											
AERATION/AIR STRIPPING											
PERMANGANATE											
ACTIVATED CARBON, GRANULAR											
ACTIVATED CARBON, POWDERED											
REVERSE OSMOSIS											
DISTILLATION											
ELECTRODIALYSIS											
SEQUESTRATION											
CORROSION INHIBITORS - PHOSP/SILICA											
FLUORIDATION											
REDUCING AGENTS - SULFUR COMPOUNDS											
SLUDGE TREATMENT											
OTHER PROCESSES/OBJECTIVES											

A = DISINFECTION
B = PARTICULATE (TURBIDITY) REMOVAL
C = SOFTENING (HARDNESS REMOVAL)
D = IRON & MANGANESE REMOVAL
E = ORGANICS AND COLOR REMOVAL
F = TASTE/ODOR CONTROL & DECHLORINATION
G = DISINFECTON BY-PRODUCTS CONTROL
H = INORGANICS REMOVAL
I = CORROSION CONTROL
J = DENTAL HEALTH

Source Treatment – Sammamish Plateau

Source Name: Well 4R

Source Number: (S15)

Process	A	B	C	D	E	F	G	H	I	J
CHLORAMINES										
CHLORINATION, GASEOUS										
CHLORINATION, HYPOCHLORITE	X			X						On-Site Electrolytic Chlorination up to 0.8%
CHLORINE DIOXIDE										
IODINATION										
OZONATION										
ULTRAVIOLET RADIATION										
RAPID MIX/IN-LINE BLENDER										
COAGULATION										
FLOCCULATION										
SEDIMENTATION										
FILTRATION, CARTRIDGE										
FILTRATION, DIATOMACEOUS EARTH										
FILTRATION, GREENSAND										
FILTRATION, PRESSURE SAND				X				X		Post Chlorination
FILTRATION, RAPID SAND										
FILTRATION, SLOW SAND										
PH ADJUSTMENT										
ION EXCHANGE										
LIME-SODA SOFTENING										
AERATION/AIR STRIPPING										
PERMANGANATE										
ACTIVATED CARBON, GRANULAR										
ACTIVATED CARBON, POWDERED										
REVERSE OSMOSIS										
DISTILLATION										
ELECTRODIALYSIS										
SEQUESTRATION										
CORROSION INHIBITORS - PHOSP/SILICA										
FLUORIDATION										
REDUCING AGENTS - SULFUR COMPOUNDS										
SLUDGE TREATMENT										
OTHER PROCESSES/OBJECTIVES										

A = DISINFECTION
B = PARTICULATE (TURBIDITY) REMOVAL
C = SOFTENING (HARDNESS REMOVAL)
D = IRON & MANGANESE REMOVAL
E = ORGANICS AND COLOR REMOVAL
F = TASTE/ODOR CONTROL & DECHLORINATION
G = DISINFECTON BY-PRODUCTS CONTROL
H = INORGANICS REMOVAL
I = CORROSION CONTROL
J = DENTAL HEALTH

Source Treatment – Sammamish Plateau

Source Name: Well 11.1
Source Number: (S17)

Process	A	B	C	D	E	F	G	H	I	J
CHLORAMINES										
CHLORINATION, GASEOUS										
CHLORINATION, HYPOCHLORITE						X				For H2S Removal; On-Site Electrolytic Chlorination up to 0.8%
CHLORINE DIOXIDE										
IODINATION										
OZONATION										
ULTRAVIOLET RADIATION										
RAPID MIX/IN-LINE BLENDER										
COAGULATION										
FLOCCULATION										
SEDIMENTATION										
FILTRATION, CARTRIDGE										
FILTRATION, DIATOMACEOUS EARTH										
FILTRATION, GREENSAND										
FILTRATION, PRESSURE SAND										
FILTRATION, RAPID SAND										
FILTRATION, SLOW SAND										
PH ADJUSTMENT										
ION EXCHANGE										
LIME-SODA SOFTENING										
AERATION/AIR STRIPPING										
PERMANGANATE										
ACTIVATED CARBON, GRANULAR										
ACTIVATED CARBON, POWDERED										
REVERSE OSMOSIS										
DISTILLATION										
ELECTRODIALYSIS										
SEQUESTRATION										
CORROSION INHIBITORS - PHOSP/SILICA										
FLUORIDATION										
REDUCING AGENTS - SULFUR COMPOUNDS										
SLUDGE TREATMENT										
OTHER PROCESSES/OBJECTIVES										

A = DISINFECTION
B = PARTICULATE (TURBIDITY) REMOVAL
C = SOFTENING (HARDNESS REMOVAL)
D = IRON & MANGANESE REMOVAL
E = ORGANICS AND COLOR REMOVAL
F = TASTE/ODOR CONTROL & DECHLORINATION
G = DISINFECTON BY-PRODUCTS CONTROL
H = INORGANICS REMOVAL
I = CORROSION CONTROL
J = DENTAL HEALTH

Source Treatment – Sammamish Plateau

Source Name: Well 11.2
Source Number: (S12)

Process	A	B	C	D	E	F	G	H	I	J	
CHLORAMINES											
CHLORINATION, GASEOUS											
CHLORINATION, HYPOCHLORITE						X					For H2S removal; On-Site Electrolytic Chlorination up to 0.8%
CHLORINE DIOXIDE											
IODINATION											
OZONATION											
ULTRAVIOLET RADIATION											
RAPID MIX/IN-LINE BLENDER											
COAGULATION											
FLOCCULATION											
SEDIMENTATION											
FILTRATION, CARTRIDGE											
FILTRATION, DIATOMACEOUS EARTH											
FILTRATION, GREENSAND											
FILTRATION, PRESSURE SAND											
FILTRATION, RAPID SAND											
FILTRATION, SLOW SAND											
PH ADJUSTMENT											
ION EXCHANGE											
LIME-SODA SOFTENING											
AERATION/AIR STRIPPING											
PERMANGANATE											
ACTIVATED CARBON, GRANULAR											
ACTIVATED CARBON, POWDERED											
REVERSE OSMOSIS											
DISTILLATION											
ELECTRODIALYSIS											
SEQUESTRATION											
CORROSION INHIBITORS - PHOSP/SILICA											
FLUORIDATION											
REDUCING AGENTS - SULFUR COMPOUNDS											
SLUDGE TREATMENT											
OTHER PROCESSES/OBJECTIVES											

A = DISINFECTION
B = PARTICULATE (TURBIDITY) REMOVAL
C = SOFTENING (HARDNESS REMOVAL)
D = IRON & MANGANESE REMOVAL
E = ORGANICS AND COLOR REMOVAL
F = TASTE/ODOR CONTROL & DECHLORINATION
G = DISINFECTON BY-PRODUCTS CONTROL
H = INORGANICS REMOVAL
I = CORROSION CONTROL
J = DENTAL HEALTH

Source Treatment – Sammamish Plateau
Source Name: Well 7
Source Number: (S06)

Process	A	B	C	D	E	F	G	H	I	J
CHLORAMINES										
CHLORINATION, GASEOUS										
CHLORINATION, HYPOCHLORITE	X									On-Site Electrolytic Chlorination up to 0.8%
CHLORINE DIOXIDE										
IODINATION										
OZONATION										
ULTRAVIOLET RADIATION										
RAPID MIX/IN-LINE BLENDER										
COAGULATION										
FLOCCULATION										
SEDIMENTATION										
FILTRATION, CARTRIDGE										
FILTRATION, DIATOMACEOUS EARTH										
FILTRATION, GREENSAND										
FILTRATION, PRESSURE SAND										
FILTRATION, RAPID SAND										
FILTRATION, SLOW SAND										
PH ADJUSTMENT									X	NaOH
ION EXCHANGE										
LIME-SODA SOFTENING										
AERATION/AIR STRIPPING										
PERMANGANATE										
ACTIVATED CARBON, GRANULAR										
ACTIVATED CARBON, POWDERED										
REVERSE OSMOSIS										
DISTILLATION										
ELECTRODIALYSIS										
SEQUESTRATION										
CORROSION INHIBITORS - PHOSP/SILICA										
FLUORIDATION									X	Operating Last Quarter of 2004
REDUCING AGENTS - SULFUR COMPOUNDS										
SLUDGE TREATMENT										
OTHER PROCESSES/OBJECTIVES										

A = DISINFECTION
B = PARTICULATE (TURBIDITY) REMOVAL
C = SOFTENING (HARDNESS REMOVAL)
D = IRON & MANGANESE REMOVAL
E = ORGANICS AND COLOR REMOVAL
F = TASTE/ODOR CONTROL & DECHLORINATION
G = DISINFECTON BY-PRODUCTS CONTROL
H = INORGANICS REMOVAL
I = CORROSION CONTROL
J = DENTAL HEALTH

Source Treatment – Sammamish Plateau

Source Name: Well 8

Source Number: (S07)

Process	A	B	C	D	E	F	G	H	I	J
CHLORAMINES										
CHLORINATION, GASEOUS										
CHLORINATION, HYPOCHLORITE	X									On-Site Electrolytic Chlorination up to 0.8%
CHLORINE DIOXIDE										
IODINATION										
OZONATION										
ULTRAVIOLET RADIATION										
RAPID MIX/IN-LINE BLENDER										
COAGULATION										
FLOCCULATION										
SEDIMENTATION										
FILTRATION, CARTRIDGE										
FILTRATION, DIATOMACEOUS EARTH										
FILTRATION, GREENSAND										
FILTRATION, PRESSURE SAND										
FILTRATION, RAPID SAND										
FILTRATION, SLOW SAND										
PH ADJUSTMENT									X	NaOH
ION EXCHANGE										
LIME-SODA SOFTENING										
AERATION/AIR STRIPPING										
PERMANGANATE										
ACTIVATED CARBON, GRANULAR										
ACTIVATED CARBON, POWDERED										
REVERSE OSMOSIS										
DISTILLATION										
ELECTRODIALYSIS										
SEQUESTRATION										
CORROSION INHIBITORS - PHOSP/SILICA										
FLUORIDATION									X	Operating Last Quarter of 2004
REDUCING AGENTS - SULFUR COMPOUNDS										
SLUDGE TREATMENT										
OTHER PROCESSES/OBJECTIVES										

A = DISINFECTION
B = PARTICULATE (TURBIDITY) REMOVAL
C = SOFTENING (HARDNESS REMOVAL)
D = IRON & MANGANESE REMOVAL
E = ORGANICS AND COLOR REMOVAL
F = TASTE/ODOR CONTROL & DECHLORINATION
G = DISINFECTON BY-PRODUCTS CONTROL
H = INORGANICS REMOVAL
I = CORROSION CONTROL
J = DENTAL HEALTH

Source Treatment – Sammamish Plateau

Source Name: Well 9
Source Number: (S13)

Process	A	B	C	D	E	F	G	H	I	J
CHLORAMINES										
CHLORINATION, GASEOUS										
CHLORINATION, HYPOCHLORITE	X									On-Site Electrolytic Chlorination up to 0.8%
CHLORINE DIOXIDE										
IODINATION										
OZONATION										
ULTRAVIOLET RADIATION										
RAPID MIX/IN-LINE BLENDER										
COAGULATION										
FLOCCULATION										
SEDIMENTATION										
FILTRATION, CARTRIDGE										
FILTRATION, DIATOMACEOUS EARTH										
FILTRATION, GREENSAND										
FILTRATION, PRESSURE SAND										
FILTRATION, RAPID SAND										
FILTRATION, SLOW SAND										
PH ADJUSTMENT									X	NaOH
ION EXCHANGE										
LIME-SODA SOFTENING										
AERATION/AIR STRIPPING										
PERMANGANATE										
ACTIVATED CARBON, GRANULAR										
ACTIVATED CARBON, POWDERED										
REVERSE OSMOSIS										
DISTILLATION										
ELECTRODIALYSIS										
SEQUESTRATION										
CORROSION INHIBITORS - PHOSP/SILICA										
FLUORIDATION									X	Operating Last Quarter of 2004
REDUCING AGENTS - SULFUR COMPOUNDS										
SLUDGE TREATMENT										
OTHER PROCESSES/OBJECTIVES										

A = DISINFECTION
B = PARTICULATE (TURBIDITY) REMOVAL
C = SOFTENING (HARDNESS REMOVAL)
D = IRON & MANGANESE REMOVAL
E = ORGANICS AND COLOR REMOVAL
F = TASTE/ODOR CONTROL & DECHLORINATION
G = DISINFECTON BY-PRODUCTS CONTROL
H = INORGANICS REMOVAL
I = CORROSION CONTROL
J = DENTAL HEALTH

Source Treatment – Sammamish Plateau

Source Name: Well 12R
Source Number: (S16)

Process	A	B	C	D	E	F	G	H	I	J	
CHLORAMINES											
CHLORINATION, GASEOUS											
CHLORINATION, HYPOCHLORITE	X			X							On-Site Electrolytic Chlorination up to 0.8%
CHLORINE DIOXIDE											
IODINATION											
OZONATION											
ULTRAVIOLET RADIATION											
RAPID MIX/IN-LINE BLENDER											
COAGULATION											
FLOCCULATION											
SEDIMENTATION											
FILTRATION, CARTRIDGE											
FILTRATION, DIATOMACEOUS EARTH											
FILTRATION, GREENSAND											
FILTRATION, PRESSURE SAND				X				X			Post Chlorination
FILTRATION, RAPID SAND											
FILTRATION, SLOW SAND											
PH ADJUSTMENT											
ION EXCHANGE											
LIME-SODA SOFTENING											
AERATION/AIR STRIPPING											
PERMANGANATE											
ACTIVATED CARBON, GRANULAR											
ACTIVATED CARBON, POWDERED											
REVERSE OSMOSIS											
DISTILLATION											
ELECTRODIALYSIS											
SEQUESTRATION											
CORROSION INHIBITORS - PHOSP/SILICA											
FLUORIDATION										X	
REDUCING AGENTS - SULFUR COMPOUNDS											
SLUDGE TREATMENT											
OTHER PROCESSES/OBJECTIVES											

A = DISINFECTION
B = PARTICULATE (TURBIDITY) REMOVAL
C = SOFTENING (HARDNESS REMOVAL)
D = IRON & MANGANESE REMOVAL
E = ORGANICS AND COLOR REMOVAL
F = TASTE/ODOR CONTROL & DECHLORINATION
G = DISINFECTON BY-PRODUCTS CONTROL
H = INORGANICS REMOVAL
I = CORROSION CONTROL
J = DENTAL HEALTH

Source Treatment – Sammamish Plateau

Source Name: Well 13
Source Number: (S09)

Process	A	B	C	D	E	F	G	H	I	J	
CHLORAMINES											
CHLORINATION, GASEOUS											
CHLORINATION, HYPOCHLORITE	X		X								Sodium Hypochlorite 12.5%; Will Change to 0.8% during last quarter of 2004
CHLORINE DIOXIDE											
IODINATION											
OZONATION											
ULTRAVIOLET RADIATION											
RAPID MIX/IN-LINE BLENDER											
COAGULATION											
FLOCCULATION											
SEDIMENTATION											
FILTRATION, CARTRIDGE											
FILTRATION, DIATOMACEOUS EARTH											
FILTRATION, GREENSAND											
FILTRATION, PRESSURE SAND			X					X			Post Chlorination
FILTRATION, RAPID SAND											
FILTRATION, SLOW SAND											
PH ADJUSTMENT											
ION EXCHANGE											
LIME-SODA SOFTENING											
AERATION/AIR STRIPPING											
PERMANGANATE											
ACTIVATED CARBON, GRANULAR											
ACTIVATED CARBON, POWDERED											
REVERSE OSMOSIS											
DISTILLATION											
ELECTRODIALYSIS											
SEQUESTRATION											
CORROSION INHIBITORS - PHOSP/SILICA											
FLUORIDATION										X	
REDUCING AGENTS - SULFUR COMPOUNDS											
SLUDGE TREATMENT											
OTHER PROCESSES/OBJECTIVES											

A = DISINFECTION
B = PARTICULATE (TURBIDITY) REMOVAL
C = SOFTENING (HARDNESS REMOVAL)
D = IRON & MANGANESE REMOVAL
E = ORGANICS AND COLOR REMOVAL
F = TASTE/ODOR CONTROL & DECHLORINATION

Source Treatment – Sammamish Plateau

Source Name: Well 14

Source Number: (S10)

Process	A	B	C	D	E	F	G	H	I	J	
CHLORAMINES											
CHLORINATION, GASEOUS											
CHLORINATION, HYPOCHLORITE	X										Sodium Hypochlorite 12.5%
CHLORINE DIOXIDE											
IODINATION											
OZONATION											
ULTRAVIOLET RADIATION											
RAPID MIX/IN-LINE BLENDER											
COAGULATION											
FLOCCULATION											
SEDIMENTATION											
FILTRATION, CARTRIDGE											
FILTRATION, DIATOMACEOUS EARTH											
FILTRATION, GREENSAND											
FILTRATION, PRESSURE SAND											
FILTRATION, RAPID SAND											
FILTRATION, SLOW SAND											
PH ADJUSTMENT											
ION EXCHANGE											
LIME-SODA SOFTENING											
AERATION/AIR STRIPPING											
PERMANGANATE											
ACTIVATED CARBON, GRANULAR											
ACTIVATED CARBON, POWDERED											
REVERSE OSMOSIS											
DISTILLATION											
ELECTRODIALYSIS											
SEQUESTRATION											
CORROSION INHIBITORS - PHOSP/SILICA											
FLUORIDATION										X	
REDUCING AGENTS - SULFUR COMPOUNDS											
SLUDGE TREATMENT											
OTHER PROCESSES/OBJECTIVES											

A = DISINFECTION
B = PARTICULATE (TURBIDITY) REMOVAL
C = SOFTENING (HARDNESS REMOVAL)
D = IRON & MANGANESE REMOVAL
E = ORGANICS AND COLOR REMOVAL
F = TASTE/ODOR CONTROL & DECHLORINATION
G = DISINFECTON BY-PRODUCTS CONTROL
H = INORGANICS REMOVAL
I = CORROSION CONTROL
J = DENTAL HEALTH

Appendix B
Well Logs & Distribution System Report Form

File Original and First Copy with Department of Ecology
Second Copy—Owner's Copy
Third Copy—Driller's Copy

WATER WELL REPORT

STATE OF WASHINGTON

Start Card No. _____

UNIQUE WELL I.D. #AAD 358

Water Right Permit No. G1-00342C

(1) OWNER: Name Sammamish Plateau Water and Sewer District Address 1510 228th ave SE, Issaquah, WA 98027

(2) LOCATION OF WELL: County King NE ¼ NE ¼ Sec 10 T 24 N., R 6E W.M.

(2a) STREET ADDDRESS OF WELL (or nearest address) 2810 241st Ave SE

(3) PROPOSED USE: ☐ Domestic ☐ Irrigation ☐ DeWater Industrial ☐ Test Well ☐ Municipal ☒ Other ☐

(4) TYPE OF WORK: Owner's number of well (if more than one) 1R

Abandoned ☐ New well ☐ Deepened ☐ Reconditioned ☐ Method: Dug ☐ Cable ☒ Rotary ☐ Bored ☐ Driven ☐ Jetted ☐

(5) DIMENSIONS: Diameter of well 12 inches.
Drilled 159 feet. Depth of completed well 155 ft.

(6) CONSTRUCTION DETAILS:

Casing installed: 12 " Diam. from +2.2 ft. to 136 ft.
Welded ☐ " Diam. from ____ ft. to ____ ft.
Liner installed ☐ " Diam. from ____ ft. to ____ ft.
Threaded ☐

Perforations: Yes ☐ No ☒
Type of perforator used ____
SIZE of perforations ____ in. by ____ in.
____ perforations from ____ ft. to ____ ft.
____ perforations from ____ ft. to ____ ft.
____ perforations from ____ ft. to ____ ft.

Screens: Yes ☒ No ☐
Manufacturer's Name UOP Johnson
Type Telescopic Model No. 304 SS
Diam. 12 in. Slot size .100 from 137 ft. to 147 ft.
Diam. ____ Slot size ____ from ____ ft. to ____ ft.

Gravel packed: Yes ☐ No ☒ Size of gravel ____
Gravel placed from ____ ft. to ____ ft.

Surface seal: Yes ☒ No ☐ To what depth? 33 ft.
Material used in seal Cement
Did any strata contain unusable water? Yes ☐ No ☒
Type of water? ____ Depth of strata ____
Method of sealing strata off ____

(7) PUMP: Manufacturer's Name ____
Type: ____ H.P. ____

(8) WATER LEVELS: Land-surface elevation above mean sea level 471.57 ft.
Static level 117.8 ft. below top of well Date 3/14/84
Artesian pressure ____ lbs. per square inch Date ____
Artesian water is controlled by ____ (Cap, valve, etc.)

(9) WELL TESTS: Drawdown is amount water level is lowered below static level
Was a pump test made? Yes ☒ No ☐ If yes, by whom? Carr/Associates
Yield: 610 gal./min. with 12.2 ft. drawdown after 6 hrs.
" " " "
" " " "

Recovery data (time taken as zero when pump turned off) (water level measured from well top to water level)

Time	Water Level	Time	Water Level	Time	Water Level

Date of test 3/14/84

Bailer test ____ gal./min. with ____ ft. drawdown after ____ hrs.
Airtest ____ gal./min. with stem set at ____ ft. for ____ hrs.
Artesian flow ____ g.p.m. Date ____
Temperature of water ____ Was a chemical analysis made? Yes ☒ No ☐

(10) WELL LOG or ABANDONMENT PROCEDURE DESCRIPTION

Formation: Describe by color, character, size of material and structure, and show thickness of aquifers and the kind and nature of the material in each stratum penetrated, with at least one entry for each change of information.

MATERIAL	FROM	TO
Topsoil, Brown sand, Gravel, cobbles, clay silt	0	3
Gravel, Brown Sand, Clay	3	17
Brwon Sand, Gravel, Clay	17	23
Gravel, Sand, Clay	23	25
Gravel, Sand, Clay Layers	25	27
Gravel, Sand, Cobbles, Grey Clay, minor silt	27	70
Sand, Gravel, Grey Clay, Minor Silt	70	80
Cemented Gravel and Sand, Grey Clay, some collbes, minor silt	80	118
Sand, Gravel, cobbles, Clean, water bearing	118	128
Sand, Gravle, Cobbles, Clay, Silt, Dirty	128	138
Sand, Gravel, Minor Clay, Silt, Clean	138	143
Gravel, Sand, Cobbles, Clean	143	149
Gravel, Sand, Blue Clay Layers	149	150
Blue Clay, Silt, Sand	150	159

Work started 2/23/84, 19. Completed March, 1984

WELL CONSTRUCTOR CERTIFICATION:

I constructed and/or accept responsibility for construction of this well, and its compliance with all Washington well construction standards. Materials used and the information reported above are true to my best knowledge and belief.

NAME Armstrong Drilling Inc.
(PERSON, FIRM, OR CORPORATION) (TYPE OR PRINT)

Address Puyallup, Washington

(Signed) ____ License No. ____
(WELL DRILLER)

Contractor's Registration No. ____ Date ____, 19__

(USE ADDITIONAL SHEETS IF NECESSARY)

ECY 050-1-20 (10/87) -1329- 18

File Original and First Copy with Department of Ecology
Second Copy—Owner's Copy
Third Copy—Driller's Copy

WATER WELL REPORT

STATE OF WASHINGTON

Start Card No. _____

UNIQUE WELL I.D. # AAD361

Water Right Permit No. 06802A

(1) OWNER: Name Sammamish Plateau Water and Sewer District Address 1510 228th Ave SE, Issaquah, WA 98027

(2) LOCATION OF WELL: County King NW ¼ SE ¼ Sec 11 T 24 N., R 6E W.M.

(2a) STREET ADDDRESS OF WELL (or nearest address) 3401 East Beaver Lake Drive

(3) PROPOSED USE: ☐ Domestic ☐ Irrigation ☐ DeWater Industrial ☐ Test Well ☐ Municipal ☐ Other ☐

(4) TYPE OF WORK: Owner's number of well (if more than one) 2

Abandoned ☐ New well ☐ Deepened ☐ Reconditioned ☐ Method: Dug ☐ Cable ☒ Rotary ☐ Bored ☐ Driven ☐ Jetted ☐

(5) DIMENSIONS: Diameter of well 12 inches.
Drilled 132 feet. Depth of completed well 116 ft.

(6) CONSTRUCTION DETAILS:

Casing installed: 12 " Diam. from 0 ft. to 97 ft.
Welded ☐ " Diam. from ____ ft. to ____ ft.
Liner installed ☐
Threaded ☐ " Diam. from ____ ft. to ____ ft.

Perforations: Yes ☐ No ☒
Type of perforator used ____
SIZE of perforations ____ in. by ____ in.
____ perforations from ____ ft. to ____ ft.
____ perforations from ____ ft. to ____ ft.
____ perforations from ____ ft. to ____ ft.

Screens: Yes ☒ No ☐
Manufacturer's Name UOP Johnson
Type Stainless Model No. ____
Diam 12 in. Slot size .080 from 96 ft. to 116 ft.
Diam ____ Slot size ____ from ____ ft. to ____ ft.

Gravel packed: Yes ☐ No ☒ Size of gravel ____
Gravel placed from ____ ft. to ____ ft.

Surface seal: Yes ☒ No ☐ To what depth? 20 ft.
Material used in seal Concrete
Did any strata contain unusable water? Yes ☐ No ☒
Type of water? ____ Depth of strata ____
Method of sealing strata off ____

(7) PUMP: Manufacturer's Name ____
Type: ____ H.P. ____

(8) WATER LEVELS: Land-surface elevation above mean sea level 416.55 ft.
Static level 62 ft. below top of well Date 10/10/68
Artesian pressure ____ lbs. per square inch Date ____
Artesian water is controlled by ____ (Cap, valve, etc.)

(9) WELL TESTS: Drawdown is amount water level is lowered below static level
Was a pump test made? Yes ☒ No ☐ If yes, by whom? ____
Yield: 500 gal./min. with 36 ft. drawdown after 12 hrs.
" " " "
" " " "

Recovery data (time taken as zero when pump turned off) (water level measured from well top to water level)

Time	Water Level	Time	Water Level	Time	Water Level

Date of test ____

Bailer test ____ gal./min. with ____ ft. drawdown after ____ hrs.
Airtest ____ gal./min. with stem set at ____ ft. for ____ hrs.
Artesian flow ____ g.p.m. Date ____
Temperature of water ____ Was a chemical analysis made? Yes ☐ No ☐

(10) WELL LOG or ABANDONMENT PROCEDURE DESCRIPTION

Formation: Describe by color, character, size of material and structure, and show thickness of aquifers and the kind and nature of the material in each stratum penetrated, with at least one entry for each change of information.

MATERIAL	FROM	TO
Clay, yellow, sandy	0	18
Hardpan	18	69
Sand, coarse gravel, water	69	72
Sand, coarse small gravel	72	75
Gravel, Sand, coarse	75	78
Hardpan	78	90
Hardpan, light brown	90	94
Sand Coarse gravel, water	94	101
Sand, caorse gravel	101	102
Sand, clay coated gravel	102	105
Gravel, large grain sand, coarse	105	111
Gravel, large grain sand, coarse	111	112
Sand, coarse, small gravel	112	113
Sand, coarse and small pea gravel	113	119
Sand, coarse and small gravel	119	122
Sand, coarse and some gravel	122	126
Sand, Clay coated and gravel	126	132

Work started ____, 19. Completed October 30, 1968

WELL CONSTRUCTOR CERTIFICATION:

I constructed and/or accept responsibility for construction of this well, and its compliance with all Washington well construction standards. Materials used and the information reported above are true to my best knowledge and belief.

NAME Richardson Well Drilling Co. Inc. (PERSON, FIRM, OR CORPORATION) (TYPE OR PRINT)

Address 219 So. 115th St., Tacoma, WA 98444

(Signed) ____ (WELL DRILLER) License No. ____

Contractor's Registration No. ____ Date ____, 19__

(USE ADDITIONAL SHEETS IF NECESSARY)

ECY 050-1-20 (10/87) -1329- 18

File Original and First Copy with Department of Ecology
Second Copy—Owner's Copy
Third Copy—Driller's Copy

WATER WELL REPORT

STATE OF WASHINGTON

Start Card No. W 16281
UNIQUE WELL I.D. #AAD383
Water Right Permit No.

(1) OWNER: Name Sammamish Plateau Water and Sewer District Address 1510 228th Avenue SE, Issaquah, WA 98029

(2) LOCATION OF WELL: County King NW ¼ SE ¼ Sec 11 T 24 N., R 6E W.M.

(2a) STREET ADDDRESS OF WELL (or nearest address) 3401 East Beaver Lake Drive

(3) PROPOSED USE: ☐ Domestic ☐ Irrigation ☐ DeWater Industrial ☐ Test Well ☐ Municipal ☒ Other ☐

(4) TYPE OF WORK: Owner's number of well (if more than one) 2.2
Abandoned ☐ New well ☒ Deepened ☐ Reconditioned ☐
Method: Dug ☐ Cable ☒ Rotary ☐ Bored ☐ Driven ☐ Jetted ☐

(5) DIMENSIONS: Diameter of well 16 inches.
Drilled 182 feet. Depth of completed well 180 ft.

(6) CONSTRUCTION DETAILS:
Casing installed: 16 " Diam. from +2 ft. to 149 ft.
Welded ☒ " Diam. from ft. to ft.
Liner installed ☐
Threaded ☐ " Diam. from ft. to ft.

Perforations: Yes ☐ No ☒
Type of perforator used
SIZE of perforations in. by in.
perforations from ft. to ft.
perforations from ft. to ft.
perforations from ft. to ft.

Screens: Yes ☒ No ☐
Manufacturer's Name Johnson
Type 304 Stainless Model No. TS
Diam. 16" Slot size Variable 0.030 from 150 ft. to 155 ft.
Diam. 16" Slot size 0.050 from 155 ft. to 170 ft.
Diam. 16" Slot size 0.040 from 170 ft. to 175 ft.

Gravel packed: Yes ☐ No ☒ Size of gravel
Gravel placed from ft. to ft.

Surface seal: Yes ☒ No ☐ To what depth? 32 ft.
Material used in seal Cement/Bentonite
Did any strata contain unusable water? Yes ☐ No ☒
Type of water? Depth of strata
Method of sealing strata off

(7) PUMP: Manufacturer's Name
Type: H.P.

(8) WATER LEVELS: Land-surface elevation above mean sea level approx. 417 ft.
Static level 63.8 ft. below top of well Date 5-9-96
Artesian pressure lbs. per square inch Date
Artesian water is controlled by (Cap, valve, etc.)

(9) WELL TESTS: Drawdown is amount water level is lowered below static level
Was a pump test made? Yes ☒ No ☐ If yes, by whom? AGI
Yield: 500 gal./min. with 44.59 ft. drawdown after 24 hrs.
" " " "
" " " "

Recovery data (time taken as zero when pump turned off) (water level measured from well top to water level)

Time	Water Level	Time	Water Level	Time	Water Level
1 min	84.65	5 min	80.50	60 min	66.67
2 min	83.10	10 min	77.32	125 min	64.98
3 min	82.18	20 min	73.11	203 min	64.56

Date of test 5-20 to 21-96
Bailer test gal./min. with ft. drawdown after hrs.
Airtest gal./min. with stem set at ft. for hrs.
Artesian flow g.p.m. Date
Temperature of water 51°F Was a chemical analysis made? Yes ☒ No ☐

(10) WELL LOG or ABANDONMENT PROCEDURE DESCRIPTION

Formation: Describe by color, character, size of material and structure, and show thickness of aquifers and the kind and nature of the material in each stratum penetrated, with at least one entry for each change of information.

MATERIAL	FROM	TO
Fill material	0	8
Yellow silty sand grading from fill-clay	8	23
Tan-gray silt-bound sand and gravel	23	68
Brown coarse sand w/gravel increasing w/dth	68	78
Gray-tan Till	78	96
Gray sand & grvl w/large cobbles, w-bearing	96	103
Gray Till	103	114
Gray to brwn coarse sand & grvl, w-bearing	114	132
Gray fine to medium coarse sand w/silt	132	147
Gray coarse sand & gravel, water-bearing	147	175
Gray silty clay w/little gravel	175	182

Work started April 16, 1996 19. Completed May 9, 19 96

WELL CONSTRUCTOR CERTIFICATION:

I constructed and/or accept responsibility for construction of this well, and its compliance with all Washington well construction standards. Materials used and the information reported above are true to my best knowledge and belief.

NAME Holt Drilling 10621 Todd Road East
(PERSON, FIRM, OR CORPORATION) (TYPE OR PRINT)
Address Puyallup, WA 98372
(Signed) Randy Holt (WELL DRILLER) License No. 1099
Contractor's Registration No. HOLTTI 0870J Date 7-9, 19 96

(USE ADDITIONAL SHEETS IF NECESSARY)

Y 050-1-20 (10/87) -1329- 18

File Original and First Copy with Department of Ecology
Second Copy—Owner's Copy
Third Copy—Driller's Copy

WATER WELL REPORT

STATE OF WASHINGTON

Start Card No. _____

UNIQUE WELL I.D. # ABR035

Water Right Permit No. 61-23022C

(1) OWNER: Name Issaquah Plateau Water District Address 1510 228th AVE SE, Issaquah WA 98027

(2) LOCATION OF WELL: County King NW ¼ SW ¼ Sec 34 T 25 N., R 6 E W.M.

(2a) STREET ADDDRESS OF WELL (or nearest address) _____

(3) PROPOSED USE: ☐ Domestic ☐ Irrigation ☐ DeWater Industrial ☐ Test Well ☐ Municipal ☐ Other ☐

(4) TYPE OF WORK: Owner's number of well (if more than one) 4

Abandoned ☐ New well ☐ Deepened ☐ Reconditioned ☐ Method: Dug ☐ Cable ☐ Rotary ☐ Bored ☐ Driven ☐ Jetted ☐

(5) DIMENSIONS: Diameter of well 12 inches.
Drilled 717 feet. Depth of completed well 717 ft.

(6) CONSTRUCTION DETAILS:

Casing installed: 12 " Diam. from 0 ft. to 650 ft.
Welded ☐ " Diam. from ft. to ft.
Liner installed ☐
Threaded ☐ " Diam. from ft. to ft.

Perforations: Yes ☐ No ☒
Type of perforator used _____
SIZE of perforations _____ in. by _____ in.
_____ perforations from _____ ft. to _____ ft.
_____ perforations from _____ ft. to _____ ft.
_____ perforations from _____ ft. to _____ ft.

Screens: Yes ☒ No ☐
Manufacturer's Name UOP Johnson
Type Stainless Steel Model No. _____
Diam 7 in Slot size 100 from 650 ft. to 717 ft.
Diam. _____ Slot size _____ from _____ ft. to _____ ft.

Gravel packed: Yes ☐ No ☒ Size of gravel _____
Gravel placed from _____ ft. to _____ ft.

Surface seal: Yes ☒ No ☐ To what depth? 20 ft.
Material used in seal Cement
Did any strata contain unusable water? Yes ☐ No ☒
Type of water? _____ Depth of strata _____
Method of sealing strata off _____

(7) PUMP: Manufacturer's Name _____
Type: _____ H.P. _____

(8) WATER LEVELS: Land-surface elevation above mean sea level 349 ft.
Static level 200 ft. below top of well Date 1/25/95
Artesian pressure _____ lbs. per square inch Date _____
Artesian water is controlled by _____ (Cap, valve, etc.))

(9) WELL TESTS: Drawdown is amount water level is lowered below static level
Was a pump test made? Yes ☒ No ☐ If yes, by whom? AGI
Yield: 400 gal./min. with 71 ft. drawdown after 4 hrs.
" " " "
" " " "

Recovery data (time taken as zero when pump turned off) (water level measured from well top to water level)

Time	Water Level	Time	Water Level	Time	Water Level
1.5 min	229.66	4	223.04	10	220.25
2	227.50	5	222.02	15	219.57
3	224.54	7	220.95	30	218.79

Date of test _____

Bailer test _____ gal./min. with _____ ft. drawdown after _____ hrs.
Airtest _____ gal./min. with stem set at _____ ft. for _____ hrs.
Artesian flow _____ g.p.m. Date _____
Temperature of water _____ Was a chemical analysis made? Yes ☐ No ☒

(10) WELL LOG or ABANDONMENT PROCEDURE DESCRIPTION

Formation: Describe by color, character, size of material and structure, and show thickness of aquifers and the kind and nature of the material in each stratum penetrated, with at least one entry for each change of information.

MATERIAL	FROM	TO
Top Soil	0	3
Hardpan & Boulders	3	43
Sand Cemented & Gravel	43	72
Clay, yellow, gravel & Sand	72	79
Hardpan Brown	79	110
clay & sand, yellow	110	118
Hardpan, Brown	118	155
clay, bn, gravel & sand	155	169
gravel, sand & grey clay	169	190
clay (bn) fine sand & gravel	190	199
gravel, course sand & some water	199	202
gravel, sand & clay grey	202	221
Clay, grey & fine Sand	221	249
Sand course to fine & grey clay	249	264
Rock, gravel & grey clay	264	271
Clay, sand & gravel	330	351
Clay, grey sand & gravel	351	370
Sand, cemented & gravel	370	380
grey clay & gravel	380	397
Sand, cemented & gravel	397	411
Grey clay, some sand & gravel	411	433
Clay, grey & fine Sand	433	542
Clay, dry, grey	542	570
Sand, fine and grey clay	570	574
grey clay	574	595
fine to course sand and grey clay	595	649
Clay, grey sand	649	651
Sand, grey clay	651	686
Gravel, grey clay & sand	686	689
Sand, cemented & gravelly clay	689	696
Sand and Gravel, WB	696	717
Sand, gravel, cemented	271	280
Rock, gravel, grey clay	280	330

Work started _____, 19. Completed March 23, 1970

WELL CONSTRUCTOR CERTIFICATION:

I constructed and/or accept responsibility for construction of this well, and its compliance with all Washington well construction standards. Materials used and the information reported above are true to my best knowledge and belief.

NAME Richardson Well Drilling Co. Inc. (PERSON, FIRM, OR CORPORATION) (TYPE OR PRINT)

Address P.O. Box 2266, Tacoma WA 98444

(Signed) _____ (WELL DRILLER) License No. _____

Contractor's Registration No. _____ Date _____, 19__

(USE ADDITIONAL SHEETS IF NECESSARY)

ECY 050-1-20 (10/87) -1229-

Please print, sign and return to the Department of Ecology

Water Well Report

Original – Ecology, 1st copy – owner, 2nd copy – driller

ECOLOGY

Construction/Decommission

☑ Construction

☐ Decommission *ORIGINAL INSTALLATION Notice of Intent Number* _____

Current Notice of Intent No. W07244

Unique Ecology Well ID Tag No. AAS 270

Water Right Permit No. _____

Property Owner Name Sammamish Plateau Water & Sewer District

Well Street Address 23001 Main St

City Sammamish, WA County King

Location NW 1/4-1/4 SW 1/4 Sec 34 Twn 25N R 6 EWM ☑ or WWM ☐ circle one

Lat/Long (s, t, r still REQUIRED) Lat Deg _____ Lat Min/Sec _____ Long Deg _____ Long Min/Sec _____

Tax Parcel No. 1241100011

PROPOSED USE: ☐ Domestic ☐ Industrial ☑ Municipal ☐ DeWater ☐ Irrigation ☐ Test Well ☐ Other _____

TYPE OF WORK: Owner's number of well (if more than one) 4R

☑ New well ☐ Reconditioned ☐ Deepened

Method: ☐ Dug ☐ Bored ☐ Driven ☐ Cable ☑ Rotary ☐ Jetted

DIMENSIONS: Diameter of well 20x12 inches, drilled 1207 ft.

Depth of completed well 854 ft.

CONSTRUCTION DETAILS

Casing Installed: ☑ Welded 20" Diam. from +3.5 ft. to 695 ft.

☐ Liner installed _____" Diam. from _____ ft. to _____ ft.

☐ Threaded _____" Diam. from _____ ft. to _____ ft.

Perforations: ☐ Yes ☑ No

Type of perforator used _____

SIZE of perfs _____ in. by _____ in. and no. of perfs _____ from _____ ft. to _____ ft.

Screens: ☑ Yes ☐ No ☐ K-Pac Location _____

Manufacturer's Name Alloy

Type 304SS Model No _____

Diam. 12PS Slot size 050 from ** ft. to ** ft.

Diam. _____ Slot size _____ from _____ ft. to _____ ft.

Gravel/Filter packed: ☑ Yes ☐ No ☑ Size of gravel/sand CSSI 8x12

Materials placed from 636 ft. to 858 ft.

Surface Seal: ☑ Yes ☐ No To what depth? 695 ft.

Material used in seal cement grout

Did any strata contain unusable water? ☐ Yes ☐ No

Type of water? _____ Depth of strata _____

Method of sealing strata off _____

PUMP: Manufacturer's Name _____

Type _____ H.P. _____

WATER LEVELS: Land-surface elevation above mean sea level ~350 ft.

Static level 217 ft. below top of well Date 3/18/04

Artesian pressure _____ lbs. per square inch Date _____

Artesian water is controlled by _____ (cap, valve, etc)

WELL TESTS: Drawdown is amount water level is lowered below static level

Was a pump test made? ☑ Yes ☐ No If yes, by whom? SEI

Yield: 2000 gal./min. with 60 ft. drawdown after 1 hrs.

Yield: 2000 gal./min. with 75 ft. drawdown after 4 hrs.

Yield: 2000 gal./min. with 75 ft. drawdown after 7 hrs.

Recovery data (time taken as zero when pump turned off) (water level ~~measured from well top to water level~~) is residual drawdown

Time	Water Level	Time	Water Level	Time	Water Level
2	29	10	18	20	13
5	23	15	15	30	11

Date of test 3/8/04

Bailer test _____ gal./min. with _____ ft. drawdown after _____ hrs.

Airtest _____ gal./min. with stem set at _____ ft. for _____ hrs.

Artesian flow _____ g.p.m. Date _____

Temperature of water ~53F Was a chemical analysis made? ☑ Yes ☐ No

CONSTRUCTION OR DECOMMISSION PROCEDURE

Formation: Describe by color, character, size of material and structure, and the kind and nature of the material in each stratum penetrated, with at least one entry for each change of information indicate all water encountered (USE ADDITIONAL SHEETS IF NECESSARY)

MATERIAL	FROM	TO
See attached formation log		
**Screen Assembly:		
12" x .250 SS blank w/MNPT on top	636	657
12" screen	657	667
12" x .250 SS blank	667	709
12" screen	709	729
12" x .250 SS blank	729	779
12" screen	779	844
12" x .250 SS blank w/SS plate bottom	844	854
Non-producing 8" pilot borehole below filter pack		
and screen assembly was backfilled with pea gravel		

Start Date 10/20/03 Completed Date 3/18/04

WELL CONSTRUCTION CERTIFICATION: I constructed and/or accept responsibility for construction of this well, and its compliance with all Washington well construction standards. Materials used and the information reported above are true to my best knowledge and belief.

Driller/Engineer/Trainee Name (Print) Stephen J Schneider

Driller/Engineer/Trainee Signature [signature]

Driller or trainee License No. 0643

Drilling Company Schneider Equipment, Inc

Address 21881 River Road NE

City, State, Zip St. Paul, OR 97137

Contractor's Registration No. SCHNEI*226LG Date 4/14/04

IF TRAINEE,

Driller's Licensed No. _____

Driller's Signature _____

Ecology is an Equal Opportunity Employer

ECY 050-1-20 (Rev 2/03)

Samammish Plateau Water & Sewer District - Well 4R

by Schneider Drilling Co.

Start Card #W07244 Label #AAS 270

FM	TO	DESCRIPTION
0	11	Brown sand & gravel w/ cobbles and silt
11	27	Orange-brown (oxidized) sand & gravel w/ trace silt
27	79	Brown gravel & sand w/ cobbles
79	91	Brown-yellow, silty gravel w/ sand
91	102	Black-gray, coarse gravel and cobbles
102	119	Brown-orange (oxidized), silty sand & gravel
119	126	Tan-yellow, silty clay w/ coarse gravel & sand
126	135	Brown-tan sand & gravel w/ some silt & trace clay
135	138	Tan-yellow, silty clay w/ coarse gravel & sand
138	155	Brown-tan sand & gravel w/ some silt & clay
155	168	Tan-yellow, silty, clayey gravel w/ coarse sand
168	191	Brown-tan gravel w/ sand, silt, & trace clay, basalt
191	208	Dark yellow-brown, clayey gravel w/ sand
208	214	Gray-brown sand & gravel w/ silt & trace clay
214	219	Tan-yellow, silty clay w/ gravel & sand
219	237	Gray-drk gray-brown, silty sand & gravel w/ clay & wood chips
237	263	Gray, silty sand & gravel w/ dark brown silty clay
263	334	Gray, coarse gravel & sand w/ some silt
334	356	Brown-yellow, silty gravel w/ sand
356	375	Gray-green, silty sand w/ gravel, trace clay
375	395	Olive-gray, silty gravel w/ sand & some clay
395	405	Brown-yellow, silty gravel w/ sand & clay
405	421	Gray gravel & some sand w/ clay
421	438	Brown, silty gravel w/ sand
438	445	Brown-yellow, silt w/ gravel & sand
445	455	Dark gray-green, silty gravel
455	545	Dark gray, silt w/ gravel & clay
545	606	Brown-gray clay w/ silt
606	642	Gray clay w/ sand
642	678	Gray, clayey, sand
678	695	Gray-green, clayey gravel w/ sand & silt

File Original and First Copy with Department of Ecology
Second Copy — Owner's Copy
Third Copy — Driller's Copy

WATER WELL REPORT

STATE OF WASHINGTON

Application No. .....

Permit No. G1-25428

(1) OWNER: Name KING COUNTY WATER DISTRICT 82 Address 1510 228th SE

(2) LOCATION OF WELL: County KING — NE ¼ NE ¼ Sec. 28 T. 24 N., R. 6 W.M.

Bearing and distance from section or subdivision corner Unique ID # AAD371

(3) PROPOSED USE: Domestic ☐ Industrial ☐ Municipal ☒ Irrigation ☐ Test Well ☐ Other ☐

(4) TYPE OF WORK: Owner's number of well (if more than one) 7

New well ☒ Deepened ☐ Reconditioned ☐

Method: Dug ☐ Bored ☐ Cable ☒ Driven ☐ Rotary ☐ Jetted ☐

(5) DIMENSIONS: Diameter of well 16 inches.

Drilled 151 ft. Depth of completed well 151 ft.

(6) CONSTRUCTION DETAILS:

Casing installed: 16 " Diam. from 0 ft. to 82.6 ft.

Threaded ☐ " Diam. from ft. to ft.

Welded ☒ " Diam. from ft. to ft.

Perforations: Yes ☐ No ☒

Type of perforator used

SIZE of perforations in. by in.

perforations from ft. to ft.

perforations from ft. to ft.

perforations from ft. to ft.

Screens: Yes ☒ No ☐

Manufacturer's Name UOP - JOHNSON

Type 304 SS Model No.

Diam. 14 RS Slot size .100 from 82.6 ft. to 103 ft.

Diam. Slot size .100 from 103 ft. to 123.6 ft.

Gravel packed: Yes ☐ No ☒ Size of gravel: .060 136.7-146.9

Gravel placed from ft. to ft.

Surface seal: Yes ☒ No ☐ To what depth? 80 ft.

Material used in seal

Did any strata contain unusable water? Yes ☐ No ☒

Type of water? Depth of strata

Method of sealing strata off

(7) PUMP: Manufacturer's Name

Type: H.P.

(8) WATER LEVELS: Land-surface elevation above mean sea level .... ft.

Static level 6.17 ft. below top of well Date 3/17/84

Artesian pressure lbs. per square inch Date

Artesian water is controlled by (Cap, valve, etc.)

(9) WELL TESTS: Drawdown is amount water level is lowered below static level

Was a pump test made? Yes ☒ No ☐ If yes, by whom? Driller

Yield: 1952 gal./min. with 37.9 ft. drawdown after 24 hrs.

" " " "

" " " "

Recovery data (time taken as zero when pump turned off) (water level measured from well top to water level)

Time	Water Level	Time	Water Level	Time	Water Level

Date of test 3/17/84

Bailer test gal./min. with ft. drawdown after hrs.

Artesian flow g.p.m. Date

Temperature of water 56 Was a chemical analysis made? Yes ☒ No ☐

(10) WELL LOG:

Formation: *Describe by color, character, size of material and structure, and show thickness of aquifers and the kind and nature of the material in each stratum penetrated, with at least one entry for each change of formation.*

MATERIAL	FROM	TO
Fill, wood, clay, gravel, silt	0	6
Gravel, sand, clay, silt	6	17
Gravel, brown sand	17	20
Brown clay, sand	20	24
Brown sand, gravel, clay, silt	24	65
Brown sand, clay, silt	65	69
Brown sand, gravel, clay, silt	69	85
Brown sand, gravel, clay, silt, WATER BEARING	85	90
Gravel, cobbles, brown sand clay, silt	90	130
Brown sand, gravel	130	133
Brown sand, gravel, layers clay	133	136
Sand, gravel, clay, silt, WATER BEARING	136	148
Brown clay, sand, some gravel	148	151

Work started Feb. 28, 19 84 Completed Mar. 18, 19 84

WELL DRILLER'S STATEMENT:

This well was drilled under my jurisdiction and this report is true to the best of my knowledge and belief.

NAME Hokkaido Drilling & Dev. Corp. (Person, firm, or corporation) (Type or print)

Address P.O. Box 100 Graham, WA

[Signed] (Well Driller)

License No. 0492 Date April 10, 19 84

(USE ADDITIONAL SHEETS IF NECESSARY)

ECY 050-1-20

Department of Ecology
Second Copy — Owner's Copy
Third Copy — Driller's Copy

WATER WELL REPORT
STATE OF WASHINGTON

Permit No. .....

(1) OWNER: Name KING COUNTY WATER DISTRICT #82 Address 1510 228 th SE

(2) LOCATION OF WELL: County KING — NE ¼ NE ¼ Sec 28 T 24 N., R 6 E W
Unique ID # AAD373
ring and distance from section or subdivision corner

(3) PROPOSED USE: Domestic ☐ Industrial ☐ Municipal ☒
Irrigation ☐ Test Well ☐ Other ☐

(4) TYPE OF WORK: Owner's number of well (if more than one) 8
New well ☒ Method: Dug ☐ Bored ☐
Deepened ☐ Cable ☒ Driven ☐
Reconditioned ☐ Rotary ☐ Jetted ☐

(5) DIMENSIONS: Diameter of well 16 inches.
Drilled 190 ft. Depth of completed well 189 ft.

(6) CONSTRUCTION DETAILS:
Casing installed: 16 " Diam. from +2.0 ft. to 105 ft.
Threaded ☐ " Diam. from 120 ft. to 125 ft.
Welded ☐ " Diam. from 135 ft. to 145 ft.

Perforations: Yes ☐ No ☒ 165 – 170
179 – 189
Type of perforator used
SIZE of perforations in. by in.
perforations from ft. to ft.
perforations from ft. to ft.
perforations from ft. to ft.

Screens: Yes ☒ No ☐
Manufacturer's Name uop–JOHNSON 304–SS
Type 16T Model No.
Diam. Slot size .060 from 105 ft. to 120 ft.
Diam. Slot size from 125 ft. to 135 ft.
145–165, 170–179

Gravel packed: Yes ☐ No ☒ Size of gravel:
Gravel placed from ft. to ft.

Surface seal: Yes ☒ No ☐ To what depth? 80 ft.
Material used in seal Cement/Bentonite
Did any strata contain unusable water? Yes ☐ No ☒
Type of water? Depth of strata
Method of sealing strata off

(7) PUMP: Manufacturer's Name
Type: H.P.

(8) WATER LEVELS: Land-surface elevation above mean sea level .... +– 72 ft.
Static level 12.6 ft. below top of well Date 8/27/84
Artesian pressure lbs. per square inch Date
Artesian water is controlled by (Cap, valve, etc.)

(9) WELL TESTS: Drawdown is amount water level is lowered below static level
Was a pump test made? Yes ☒ No ☐ If yes, by whom? Driller
Yield: 1977 gal./min. with 22 ft. drawdown after 4 hrs.
" " " "
" " " "

Recovery data (time taken as zero when pump turned off) (water level measured from well top to water level)

Time	Water Level	Time	Water Level	Time	Water Level

Date of test
Bailer test gal./min. with ft. drawdown after hrs.
Artesian flow g.p.m. Date
Temperature of water Was a chemical analysis made? Yes ☐ No ☐

(10) WELL LOG:
Formation: Describe by color, character, size of material and structure, c show thickness of aquifers and the kind and nature of the material in ec stratum penetrated, with at least one entry for each change of formati

MATERIAL	FROM	TO
Fill, w/bark,roots,sand,cbls	0	11
D.Brown sand,gravel,silt,clay	11	14
D.Brown clay, minor gravel	14	17
Brown sand, gravel,silt,clay	17	32
Grey clay	32	34
Brown-blue sand,gravel,silt	34	42
wood,peat		
Clean sand, gravel	42	69
Dirty sand, gravel, layers	69	79
grey clay		
Grey silty clay	79	95
Sand, gravel, in brown clay	95	102
binder		
Sand, gravel, some cobbles	102	178
varying amounts	of fines	
Brown silty sand, gravel	178	190

RECEIVED
MAY 2 1985
DEPARTMENT OF ECOLOGY
NORTHWEST REGION

Work started 8/6/84, 19.... Completed 8/29/84, 19..

WELL DRILLER'S STATEMENT:

This well was drilled under my jurisdiction and this repor true to the best of my knowledge and belief.

NAME Hokkaido Drilling & Developing (Person, firm, or corporation) (Type or print)
Address Graham, WA

[Signed] Bob Carper (Well Driller)

License No. 1239 Date 9/12, 19.

(USE ADDITIONAL SHEETS IF NECESSARY)

Department of Ecology
Second Copy—Owner's Copy
Third Copy—Driller's Copy

WATER WELL REPORT

STATE OF WASHINGTON

Unique ID# AAD365

Water Right Permit No. G1-26014

980

(1) OWNER: Name Sammamish Plateau Water District Address 1510-228th St SE, Issaquah, WA

(2) LOCATION OF WELL: County King SW ¼ NW ¼ Sec. 27 T. 24 N., R. 6E W.M.

(2a) STREET ADDDRESS OF WELL (or nearest address) 930 1st Avenue NE, Issaquah, WA 98027

(3) PROPOSED USE: ☐ Domestic ☐ Irrigation ☐ DeWater Industrial ☐ Test Well ☐ Municipal ☒ Other ☐

(4) TYPE OF WORK: Owner's number of well (if more than one) Well 9

Abandoned ☐ New well ☒ Deepened ☐ Reconditioned ☐ Method: Dug ☐ Cable ☒ Rotary ☐ Bored ☐ Driven ☐ Jetted ☐

(5) DIMENSIONS: Diameter of well 24 inches.
Drilled 303 feet. Depth of completed well 222 ft.

(6) CONSTRUCTION DETAILS:
Casing installed: 24 " Diam. from +2.0 ft. to 194 ft.
Welded ☐ " Diam. from ft. to ft.
Liner installed ☐
Threaded ☐ " Diam. from ft. to ft.

Perforations: Yes ☐ No ☒
Type of perforator used
SIZE of perforations in. by in.
perforations from ft. to ft.
perforations from ft. to ft.
perforations from ft. to ft.

Screens: Yes ☒ No ☐
Manufacturer's Name UOP Johnsons
Type WW 304 Stainless Model No.
Diam. 24T Slot size 080 from 194 ft. to 209 ft.
Diam. 24T Slot size 060 from 209 ft. to 219 ft.

Gravel packed: Yes ☐ No ☒ Size of gravel
Gravel placed from ft. to ft.

Surface seal: Yes ☒ No ☐ To what depth? 64 ft.
Material used in seal Cement, 5% bentonite
Did any strata contain unusable water? Yes ☐ No ☒
Type of water? Depth of strata
Method of sealing strata off

(7) PUMP: Manufacturer's Name
Type: H.P.

(8) WATER LEVELS: Land-surface elevation above mean sea level 75.05 ft.
Static level 20.16 ft. below top of well Date 7/15/91
Artesian pressure lbs. per square inch Date
Artesian water is controlled by (Cap, valve, etc.)

(9) WELL TESTS: Drawdown is amount water level is lowered below static level
Was a pump test made? Yes ☒ No ☐ If yes, by whom? Carr/Assoc.
Yield: 2340 gal./min. with 22.45 ft. drawdown after 229 hrs.
" " " "
" " " "

Recovery data (time taken as zero when pump turned off) (water level measured from well top to water level)

Time	Water Level	Time	Water Level	Time	Water Level
0	41.95	11	22.17	127	21.72
1	22.52	17	22.14	365	21.34
2	22.40	35	22.04	1375	20.62

Date of test 7/12-22/92

Bailer test gal./min. with ft. drawdown after hrs.
Airtest gal./min. with stem set at ft. for hrs.
Artesian flow g.p.m. Date
Temperature of water 11.6 C Was chemical analysis made? Yes X No

(10) WELL LOG or ABANDONMENT PROCEDURE DESCRIPTION

Formation: Describe by color, character, size of material and structure, and show thickness of aquifers and the kind and nature of the material in each stratum penetrated, with at least one entry for each change of information.

MATERIAL	FROM	TO
Fill	0	3
Gravel,sand,silt,brn	3	19
Gravel, sand,silt,brn	19	22
Sand,grvl,silt,brn,w-brnq	22	30
Gravel,sand,cobbles,clean,brn	30	34
Gravel,sand,silt,minor w-brnq	34	56
Sand,silty,grvl,peat,gray	56	60
Silt,sand,gravel,gray,lyrs	60	69
Sand,gravel,cobbles,clean,wb	69	71
Sand,gravel,silt,brn,w-brnq	71	80
Sand,gravel,cobbles,brn,wb	80	108
Silt,sandy,gravel,brn	108	112
Silt,sand,grvl,brn,layered	112	115
Gravel,sand,cobbles,brn,wood	115	142
Gravel,sand,cobbles,brn,wb	142	160
Silt,sandy,clay,gry-brn,stick	160	165
Clay,silty,gravel,gray	165	185
Gravel,sand,silt,brn,m-wb	185	193
Sand,grvl,cobbles,cln,silt	193	209
Sand,gravel,silt,clay,w-brnq	209	213
Sand,gravel,clean,brn,w-brnq	213	219
Sand,silty,grvl,red-brn,wb	219	233
Silt,sandy,grvl,fine,gray	233	260
Silt,sandy,gravel,gray	260	262
Silt,sandy,grvl,brn-gray	262	270
Silt,sandy,gray	270	283
Silt,clayey,sticky	283	287
Sand,silty,gray,peat,wood	287	301
Sandstone,gray	301	303
	7/15/91	Devel

Work started 4/30/91, 19. Completed , 19

WELL CONSTRUCTOR CERTIFICATION:

I constructed and/or accept responsibility for construction of this well, and its compliance with all Washington well construction standards. Materials used and the information reported above are true to my best knowledge and belief.

NAME Hokkaido Drilling & Develop. Corp (TYPE OR PRINT)
(PERSON, FIRM, OR CORPORATION)
Address P.O. Box 100 Graham, WA 98408

(Signed) [signature] (WELL DRILLER) License No. 1239

Contractor's Registration No. HOKKADD178D3 Date January 31, 19 92

(USE ADDITIONAL SHEETS IF NECESSARY)

File Original and First Copy with Department of Ecology
Second Copy—Owner's Copy
Third Copy—Driller's Copy

WATER WELL REPORT

STATE OF WASHINGTON

Start Card No. 064368

Water Right Permit No. GI-27166

(1) OWNER: Name Sammamish Plateau Water Dist. Address 1510 228th Ave SE, Issaquah, WA 980

(2) LOCATION OF WELL: County King NE ¼ SW ¼ Sec 11 T 24 N., R 6E W.M.

(2a) STREET ADDDRESS OF WELL (or nearest address)

(3) PROPOSED USE: ☐ Domestic ☐ Irrigation ☐ DeWater Industrial ☐ Test Well ☐ Municipal ☒ Other ☐

(4) TYPE OF WORK: Owner's number of well (if more than one) 10

Abandoned ☐ New well ☒ Deepened ☐ Reconditioned ☐ Method: Dug ☐ Cable ☒ Rotary ☐ Bored ☐ Driven ☐ Jetted ☐

(5) DIMENSIONS: Diameter of well 12 inches.
Drilled 194 feet. Depth of completed well 193 ft.

(6) CONSTRUCTION DETAILS:
Casing installed: 12" Diam. from +2.5 ft. to 135 ft.
Welded ☒ " Diam. from ft. to ft.
Liner installed ☐ " Diam. from ft. to ft.
Threaded ☐

Perforations: Yes ☐ No ☒
Type of perforator used
SIZE of perforations in. by in.
perforations from ft. to ft.
perforations from ft. to ft.
perforations from ft. to ft.

Screens: Yes ☒ No ☐
Manufacturer's Name
Type 304 Stainless Model No.
Diam. 10 Slot size 0.030 from 135 ft. to 155 ft.
Diam. Slot size from 173 ft. to 183 ft.

Gravel packed: Yes ☐ No ☒ Size of gravel
Gravel placed from ft. to ft.

Surface seal: Yes ☒ No ☐ To what depth? 65 ft.
Material used in seal Bent/Grvl 65-55;Cmnt 55-0
Did any strata contain unusable water? Yes ☐ No ☒
Type of water? Depth of strata
Method of sealing strata off

(7) PUMP: Manufacturer's Name
Type: H.P.

(8) WATER LEVELS: Land-surface elevation above mean sea level Approx 420 ft.
Static level 67.23 BGS ft. below top of well Date 8/23/93
Artesian pressure lbs. per square inch Date
Artesian water is controlled by (Cap, valve, etc.)

(9) WELL TESTS: Drawdown is amount water level is lowered below static level
Was a pump test made? Yes ☒ No ☐ If yes, by whom? Carr/AGI
Yield: 508 gal./min. with 38 ft. drawdown after 24 hrs.
" " " "
" " " "

Recovery data (time taken as zero when pump turned off) (water level measured from well top to water level)

Time	Water Level	Time	Water Level	Time	Water Level
1	79.20	10	83.27	30	80.30
2	85.00	15	82.36	60	77.70
5	84.37	20	81.58	90	76.07

Date of test 8/24-25/93
Bailer test gal./min. with ft. drawdown after hrs.
Airtest gal./min. with stem set at ft. for hrs.
Artesian flow g.p.m. Date
Temperature of water 8°C Was a chemical analysis made? Yes ☐ No ☐

(10) WELL LOG or ABANDONMENT PROCEDURE DESCRIPTION

Formation: Describe by color, character, size of material and structure, and show thickness of aquifers and the kind and nature of the material in each stratum penetrated, with at least one entry for each change of information.

MATERIAL	FROM	TO
Topsoil	0	5
Sand & Gravel, gray-tan, cmnt	5	34
Sand & Gravel, Loose, dry	34	36
Till, Cemented Silt & Cbls	36	70
Sand, brown, claybound	70	75
Sand & Grvl, Brn-Gry, W-B	75	97
Clay w/sand, bluish-gry, lean	97	123
Sandy Gravel,olive-gry, W-B	123	160
Silt w/peat & grbl, olive-gry	160	169
Grvl w/sand-peat-silt,ol-gry	169	175
Sabd w/silt,grvlv,olive-blk	175	193

Work started 7/5/93, 19. Completed 8/26, 19 93

WELL CONSTRUCTOR CERTIFICATION:

I constructed and/or accept responsibility for construction of this well, and its compliance with all Washington well construction standards. Materials used and the information reported above are true to my best knowledge and belief.

NAME Armstrong Drilling, Inc. (PERSON, FIRM, OR CORPORATION) (TYPE OR PRINT)
Address 10715 66th Avenue East Puyallup, WA 98371
(Signed) [signature] (WELL DRILLER) License No. 0012
Contractor's Registration No. ARMSTDI135NC Date 9-16, 19 93

(USE ADDITIONAL SHEETS IF NECESSARY)

ECY 050-1-20 (10/87) -1329- 3

File Original and First Copy with Department of Ecology
Second Copy—Owner's Copy
Third Copy—Driller's Copy

WATER WELL REPORT

STATE OF WASHINGTON

Start Card No. _____

UNIQUE WELL I.D. # AAD381

Water Right Permit No. G1-26573

(1) OWNER: Name Sammamish Plateau Water and Sewer District Address 1510 228th Ave SE, Issaquah, WA 98027

(2) LOCATION OF WELL: County King NW ¼ NW ¼ Sec 34 T 25 N., R 6E W.M.

(2a) STREET ADDDRESS OF WELL (or nearest address) Lake Washington School Dist.#414, Redmond, WA

(3) PROPOSED USE: ☐ Domestic ☐ Irrigation ☐ DeWater Industrial ☐ Test Well ☐ Municipal ☒ Other ☐

(4) TYPE OF WORK: Owner's number of well (if more than one) 11.1

Abandoned ☐ New well ☒ Deepened ☐ Reconditioned ☐ Method: Dug ☐ Cable ☒ Rotary ☐ Bored ☐ Driven ☐ Jetted ☐

(5) DIMENSIONS: Diameter of well 10 inches.

Drilled 499 feet. Depth of completed well 491 ft.

(6) CONSTRUCTION DETAILS:

Casing installed: 16" Diam. from 0 ft. to 186 ft.

Welded ☒ 16" Diam. from 212 ft. to 219 ft.

Liner installed ☐

Threaded ☐ 10" Diam. from +2.2 ft. to 409 ft.

Perforations: Yes ☐ No ☒

Type of perforator used _____

SIZE of perforations _____ in. by _____ in.

_____ perforations from _____ ft. to _____ ft.

_____ perforations from _____ ft. to _____ ft.

_____ perforations from _____ ft. to _____ ft.

Screens: Yes ☒ No ☐

Manufacturer's Name Johnson

Type 304 Stainless Model No. P.S.

Diam. 6 inch Slot size 0.35 from 409 ft. to 419 ft.

Diam. _____ Slot size _____ from 426 ft. to 431 ft.

461 to 486

Gravel packed: Yes ☒ No ☐ Size of gravel CSS 8-12

Gravel placed from 377 ft. to 491 ft.

Surface seal: Yes ☒ No ☐ To what depth? 43 ft.

Material used in seal Cement

Did any strata contain unusable water? Yes ☐ No ☒

Type of water? _____ Depth of strata _____

Method of sealing strata off _____

(7) PUMP: Manufacturer's Name _____

Type: _____ H.P. _____

(8) WATER LEVELS: Land-surface elevation above mean sea level 360 ft.

Static level 230 ft. below top of well Date 7/21/93

Artesian pressure _____ lbs. per square inch Date _____

Artesian water is controlled by _____ (Cap, valve, etc.))

(9) WELL TESTS: Drawdown is amount water level is lowered below static level

Was a pump test made? Yes ☐ No ☐ If yes, by whom? _____

Yield: _____ gal./min. with _____ ft. drawdown after _____ hrs.

" " " "

" " " "

Recovery data (time taken as zero when pump turned off) (water level measured from well top to water level)

Time	Water Level	Time	Water Level	Time	Water Level

Date of test _____

Bailer test _____ gal./min. with _____ ft. drawdown after _____ hrs.

Airtest _____ gal./min. with stem set at _____ ft. for _____ hrs.

Artesian flow _____ g.p.m. Date _____

Temperature of water _____ Was a chemical analysis made? Yes ☐ No ☐

(10) WELL LOG or ABANDONMENT PROCEDURE DESCRIPTION

Formation: Describe by color, character, size of material and structure, and show thickness of aquifers and the kind and nature of the material in each stratum penetrated, with at least one entry for each change of information.

MATERIAL	FROM	TO
Hard-pan	0	41
Brown Siltbound Sands and Gravels	41	90
Brownish-Orange Siltbound sands and Gravels	90	112
Brown Siltbound Sands and Gravels	112	115
Brown Siltbound Sands and Gravels with Cobbles	115	137
Brown Siltbound Sands and Gravels	137	156
Brown sands and Gravels with Silt, WB	156	180
Brown sands and Gravels, Water Bearing	180	201
Brown Sands and Gravels with Silt	201	204
Brown sands and Gravels with trace Silt	204	210
Brown Siltbound Sands and Gravels	210	220
Gray Silty Sands with few Gravels	220	241
Silty Sands and Gravels	241	251
Brownish-Gray Silty Sands and Gravels	251	291
Silty sands, Gravels and Cobbles	291	305
Silty Sands, Gravels and with few Cobbles	305	321
Tan Silty Sands and Gravels Water Bearing	321	351
Tan Silty Sands and Gravels	351	363
Tan Siltbound sands and Gravels	363	375
Tan Siltbound Sands and Gravels with Cobbles	375	390
Tan Silty sands, Gravels and Cobbles; WB	390	410
Tannish Sands and Gravels	410	423
Tan Silty sands and Gravels	423	429
Tannish Sands and Gravels	429	434
Tan Silty Sands, Gravels and Cobbles	434	464
Tannish Sands and Gravels	464	489
Gray Sands and Cobbles	489	499

Note: Final development and testing has not been done as of the completion date.

Work started 4/28/93, 19. Completed 8/9/93, 19

WELL CONSTRUCTOR CERTIFICATION:

I constructed and/or accept responsibility for construction of this well, and its compliance with all Washington well construction standards. Materials used and the information reported above are true to my best knowledge and belief.

NAME Holt Drilling, Inc. (PERSON, FIRM, OR CORPORATION) (TYPE OR PRINT)

Address 10621 Todd Road East, Puyallup, WA 98372

(Signed) _____ (WELL DRILLER) License No. _____

Contractor's Registration No. HOLTDI*13606 Date _____, 19

(USE ADDITIONAL SHEETS IF NECESSARY)

File Original and First Copy with Department of Ecology
Second Copy—Owner's Copy
Third Copy—Driller's Copy

WATER WELL REPORT

STATE OF WASHINGTON

Start Card No. _____

UNIQUE WELL I.D. # AAD382

Water Right Permit No. G1-26572

(1) OWNER: Name Sammamish Plateau Water and Sewer District Address 1510 228th Ave SE, Issaquah, WA 98027

(2) LOCATION OF WELL: County King NW ¼ NW ¼ Sec 34 T 25 N., R 6E W.M.

(2a) STREET ADDDRESS OF WELL (or nearest address) Lake Washington School Dist. No. 414, Redmond, WA

(3) PROPOSED USE: ☐ Domestic ☐ Irrigation ☐ DeWater Industrial ☐ Test Well ☐ Municipal ☒ Other ☐

(4) TYPE OF WORK: Owner's number of well (if more than one) 11.2

Abandoned ☐ New well ☒ Deepened ☐ Reconditioned ☐ Method: Dug ☐ Cable ☒ Rotary ☒ Bored ☐ Driven ☐ Jetted ☐

(5) DIMENSIONS: Diameter of well 16 inches.

Drilled 885 feet. Depth of completed well 884 ft.

(6) CONSTRUCTION DETAILS:

Casing installed: 24" Diam. from 0 ft. to 352 ft.

Welded ☒ 20" Diam. from 0 ft. to 630 ft.

Liner installed ☐

Threaded ☐ 16" Diam. from +2.0 ft. to 705 ft.

Perforations: Yes ☐ No ☒

Type of perforator used _____

SIZE of perforations _____ in. by _____ in.

_____ perforations from _____ ft. to _____ ft.

_____ perforations from _____ ft. to _____ ft.

_____ perforations from _____ ft. to _____ ft.

Screens: Yes ☒ No ☐

Manufacturer's Name Johnson

Type 304 Stainless Model No. PS

Diam. 8 inch Slot size .030 from 785 ft. to 821 ft.

Diam. 8 inch Slot size .030 from 839 ft. to 880 ft.

Gravel packed: Yes ☒ No ☐ Size of gravel CSS 8-12

Gravel placed from 648 ft. to 884 ft.

Surface seal: Yes ☒ No ☐ To what depth? 43 ft.

Material used in seal Cement

Did any strata contain unusable water? Yes ☐ No ☐

Type of water? _____ Depth of strata _____

Method of sealing strata off _____

(7) PUMP: Manufacturer's Name _____

Type: _____ H.P. _____

(8) WATER LEVELS: Land-surface elevation above mean sea level 360 ft.

Static level 235 ft. below top of well Date 8/6/93

Artesian pressure _____ lbs. per square inch Date _____

Artesian water is controlled by _____ (Cap, valve, etc.)

(9) WELL TESTS: Drawdown is amount water level is lowered below static level

Was a pump test made? Yes ☐ No ☐ If yes, by whom? _____

Yield: _____ gal./min. with _____ ft. drawdown after _____ hrs.

" " " "

" " " "

Recovery data (time taken as zero when pump turned off) (water level measured from well top to water level)

Time	Water Level	Time	Water Level	Time	Water Level

Date of test _____

Bailer test _____ gal./min. with _____ ft. drawdown after _____ hrs.

Airtest _____ gal./min. with stem set at _____ ft. for _____ hrs.

Artesian flow _____ g.p.m. Date _____

Temperature of water _____ Was a chemical analysis made? Yes ☐ No ☐

(10) WELL LOG or ABANDONMENT PROCEDURE DESCRIPTION

Formation: Describe by color, character, size of material and structure, and show thickness of aquifers and the kind and nature of the material in each stratum penetrated, with at least one entry for each change of information.

MATERIAL	FROM	TO
Hardpan	0	41
Siltbound Gravels, Brown	41	61
Siltbound Sands and Gravels, Brown	61	82
Siltbound Sands and Gravels, Redish-Brown	82	112
Siltbound Sands and Gravels, Brown	112	170
Siltbound Sands and Gravels, Brown; WB	170	185
Loose Sands and Gravels, WB	185	200
Sands and Gravels with trace Silt	200	205
Sands and Gravels with Silt	205	212
Sands, Gravels, and Cobbles	212	219
Silty Clay with Peat and Gravels	219	228
Siltbound Sands	228	233
Siltbound Sands and Gravels	233	278
Siltbound Gravels and Cobbles	278	296
Siltbound Sands, Gravels and Cobbles	296	323
Siltbound Sands and Gravels	323	358
Siltbound Sands, Gravels and Cobbles	358	369
Siltbound Sands and Gravels	369	394
Silty Sands, Gravels and Cobbles	394	417
Sands and Gravels with trace of Silt	417	434
Silty Sands, Gravels and Cobbles	434	465
Sands and Gravels	465	471
Siltbound Sands and Gravels	471	475
Loose Sands with trace Gravels	475	494
Fine Sands with Trace Gravels and Cobbles	494	505
Fine Silty Sands with trace Gravels and Cobbles	505	520
Siltbound Sands, Grey	520	560
Continued on next form pages		
Note: Final development and testing has not been done as of completion date.		

Work started 4/7/93, 19. Completed 8/6/93, 19

WELL CONSTRUCTOR CERTIFICATION:

I constructed and/or accept responsibility for construction of this well, and its compliance with all Washington well construction standards. Materials used and the information reported above are true to my best knowledge and belief.

NAME Holt Drilling, Inc. (PERSON, FIRM, OR CORPORATION) (TYPE OR PRINT)

Address 10621 Todd Road East, Puyallup, WA 98372

(Signed) _____ (WELL DRILLER) License No. _____

Contractor's Registration No. HOLDDI*13606 Date _____, 19

(USE ADDITIONAL SHEETS IF NECESSARY)

File Original and First Copy with Department of Ecology
Second Copy—Owner's Copy
Third Copy—Driller's Copy

WATER WELL REPORT

STATE OF WASHINGTON

Start Card No. _____

UNIQUE WELL I.D. # AAD382

Water Right Permit No. G1-26572

(1) OWNER: Name ~~Sammamish Plateau Water and Sewer District~~ Address 1510 228th Ave SE, Issaquah, WA 98027

(2) LOCATION OF WELL: County King NW ¼ NW ¼ Sec 34 T 25 N., R 6E W.M.

(2a) STREET ADDDRESS OF WELL (or nearest address) Lake Washington School District No. 414, Redmond, Washington

(3) PROPOSED USE: ☐ Domestic ☐ Irrigation ☐ DeWater Industrial ☐ Test Well ☐ Municipal ☒ Other ☐

(4) TYPE OF WORK: Owner's number of well (if more than one) 11.2

Abandoned ☐ New well ☒ Deepened ☐ Reconditioned ☐ Method: Dug ☐ Cable ☒ Rotary ☒ Bored ☐ Driven ☐ Jetted ☐

(5) DIMENSIONS: Diameter of well 16 inches.

Drilled 885 feet. Depth of completed well 884 ft.

(6) CONSTRUCTION DETAILS:

Casing installed: _____" Diam. from _____ ft. to _____ ft.

Welded ☐ _____" Diam. from _____ ft. to _____ ft.

Liner installed ☐

Threaded ☐ _____" Diam. from _____ ft. to _____ ft.

Perforations: Yes ☐ No ☐

Type of perforator used _____

SIZE of perforations _____ in. by _____ in.

_____ perforations from _____ ft. to _____ ft.

_____ perforations from _____ ft. to _____ ft.

_____ perforations from _____ ft. to _____ ft.

Screens: Yes ☐ No ☐

Manufacturer's Name _____

Model No. _____

Diam. _____ Slot size _____ from _____ ft. to _____ ft.

Diam. _____ Slot size _____ from _____ ft. to _____ ft.

Gravel packed: Yes ☐ No ☐ Size of gravel _____

Gravel placed from _____ ft. to _____ ft.

Surface seal: Yes ☐ No ☐ To what depth? _____ ft.

Material used in seal _____

Did any strata contain unusable water? Yes ☐ No ☐

Type of water? _____ Depth of strata _____

Method of sealing strata off _____

(7) PUMP: Manufacturer's Name _____

Type: _____ H.P. _____

(8) WATER LEVELS: Land-surface elevation above mean sea level _____ ft.

Static level _____ ft. below top of well Date _____

Artesian pressure _____ lbs. per square inch Date _____

Artesian water is controlled by _____ (Cap, valve, etc.)

(9) WELL TESTS: Drawdown is amount water level is lowered below static level

Was a pump test made? Yes ☐ No ☐ If yes, by whom? _____

Yield: _____ gal./min. with _____ ft. drawdown after _____ hrs.

" " " "

" " " "

Recovery data (time taken as zero when pump turned off) (water level measured from well top to water level)

Time	Water Level	Time	Water Level	Time	Water Level

Date of test _____

Bailer test _____ gal./min. with _____ ft. drawdown after _____ hrs.

Airtest _____ gal./min. with stem set at _____ ft. for _____ hrs.

Artesian flow _____ g.p.m. Date _____

Temperature of water _____ Was a chemical analysis made? Yes ☐ No ☐

(10) WELL LOG or ABANDONMENT PROCEDURE DESCRIPTION

Formation: Describe by color, character, size of material and structure, and show thickness of aquifers and the kind and nature of the material in each stratum penetrated, with at least one entry for each change of information.

MATERIAL	FROM	TO
Continued from previous form		
~~Silty, Clay Grey~~	~~560~~	~~620~~
~~Sands, WB~~	~~620~~	~~624~~
Silty, Clay, Gray	624	654
Sandy Silt, Gray	654	661
Silty Sands with trace Wood	661	680
Silt, Gray	680	688
Sandy Silt, some Gravels and wood, Gray	688	709
Silty Sands and Gravels, some Cobbles, Gray	709	729
Silty sands and Gravels, Gray	729	740
Silty Sands, some Gravels and wood, Gray	740	749
Silty Sands, and Grav els, Gray	749	781
Sands and Gravels, Gray	781	790
Sands, Gravels and Cobbles, Gray	790	814
Clay, few Gravels, Gray	814	819
Silty sands, some Gravels and wood, Gray	819	825
Silty Sands and Gravels, Gray	825	845
S ands, Gravels and Cobbles, Gray	845	884

Work started 4/7/93, 19. Completed 8/6/93, 19

WELL CONSTRUCTOR CERTIFICATION:

I constructed and/or accept responsibility for construction of this well, and its compliance with all Washington well construction standards. Materials used and the information reported above are true to my best knowledge and belief.

NAME Holt Drilling, Inc. (PERSON, FIRM, OR CORPORATION) (TYPE OR PRINT)

Address 10621 Todd Road East, Puyallup, WA 98372

(Signed) _____ (WELL DRILLER) License No. _____

Contractor's Registration No. HOLTDI*13606 Date _____, 19

(USE ADDITIONAL SHEETS IF NECESSARY)

SPWSD well 12

X - 576,245
Y - 5,277,882
Z - 650

SW SE [illegible]

Drilling Co. [illegible]

Address [illegible]

Method of Drilling _____ Date Oct. 28 [illegible]

Owner Ames Lake Water Co.

Address 920 Miller St., Seattle [illegible]

Land surface datum _____ ft. above / below _____

Classification	Material	Thickness (feet)	Depth (feet)	
	(Transcribe driller's terminology literally but paraphrase as necessary, [illegible] If material water-bearing, so state and record static level if reported. Give [illegible] below land-surface datum unless otherwise indicated. Correlate with [illegible] if feasible. Following list of materials, list all casings, perforations, [illegible]			
	Fill & top soil	2	2	5
	Hardpan & some gravel	21	23	
	" finer gravel & some sand	[illegible]	27	4400
	Clay	[illegible]	28	
	Gr. sand with very little sediment	9	37	2000
	Gravel, sand clay in alternating layers, grey-brn.	31	68	1230
	Gravel, very hard	5	73	
	Gravel with blue clay mix.	35	108	
	Very hard hardpan & gravel	3	111	4400
	" " " " "	13	124	
	Very coarse gravel	21	145	100W
	PUMP TEST:			
	Dim. 145'x8"			
	SWL: 120 ft.			
	DD: 5 ft.			

Turn up (over) Sheet ____ of ____ sheets

File Original and First Copy with Department of Ecology
Second Copy — Owner's Copy
Third Copy — Driller's Copy

SPWSD Well 13

WATER WELL REPORT

STATE OF WASHINGTON

Application No. [redacted]

Permit No. .....

(1) OWNER: Name Cascade View Developers Assoc. Address 16 Wembley Lane, Mercer Island, WA

(2) LOCATION OF WELL: County KING — SW ¼ NW ¼ Sec. 12E T. 25 N., R. 6E W.M.

Bearing and distance from section or subdivision corner 2540'S, 100'E of NW corner of Section 12

(3) PROPOSED USE: Domestic ☐ Industrial ☐ Municipal ☒ Irrigation ☐ Test Well ☐ Other ☐

(4) TYPE OF WORK: Owner's number of well (if more than one) .....

New well ☒ Method: Dug ☐ Bored ☐
Deepened ☐ 0-787' Cable ☒ Driven ☐
Reconditioned ☐ 787-955' Rotary ☒ Jetted ☐

(5) DIMENSIONS: Diameter of well 6 inches.
Drilled 955 ft. Depth of completed well 954 ft.

(6) CONSTRUCTION DETAILS:

Casing installed: 12" Diam. from +1 ft. to 477 ft.
Threaded ☐ 8" Diam. from +1 ft. to 787 ft.
Welded ☒ 6" Diam. from +2.7 ft. to 865 ft.

Perforations: Yes ☐ No ☒
Type of perforator used .....
SIZE of perforations ..... in. by ..... in.
..... perforations from ..... ft. to ..... ft.
..... perforations from ..... ft. to ..... ft.
..... perforations from ..... ft. to ..... ft.

Screens: Yes ☒ No ☐ Johnson
Manufacturer's Name .....
Type Stainless Steel Model No. .....
Diam. 6" Slot size 20 from 865 ft. to 875 ft.
Diam. 6" Slot size 20 from 882.5 ft. to 887.5 ft.
Diam. 6" Slot size 20 from 917 ft. to 915 ft.
6" 60 929 944

Gravel packed: Yes ☐ No ☒ Size of gravel .....
Gravel placed from ..... ft. to ..... ft.

Surface seal: Yes ☒ No ☐ To what depth? 20 ft.
Material used in seal bentonite
Did any strata contain unusable water? Yes ☐ No ☐
Type of water? ..... Depth of strata .....
Method of sealing strata off .....

(7) PUMP: Manufacturer's Name .....
Type: ..... H.P. .....

(8) WATER LEVELS: Land-surface elevation above mean sea level ~640 ft. Tpc
Static level 523.0 ft. below top of well Date 7/30/90
Artesian pressure ..... lbs per square inch Date .....
Artesian water is controlled by ..... (Cap, valve, etc.)

(9) WELL TESTS: Drawdown is amount water level is lowered below static level
Was a pump test made? Yes ☒ No ☐ If yes, by whom? R+N
Yield: 180 gal./min. with 52.35 ft drawdown after 24 hrs.
" " " "
" " " "

Recovery data (time taken as zero when pump turned off) (water level measured from well top to water level)

Time	Water Level	Time	Water Level	Time	Water Level
1	533.9	12	529.6	82	527.8
3	531.2	25	528.85	120	527.35
6	530.4	42	528.4	1660	524.63

Date of test 7/30 - 7/31/90
Bailer test ..... gal./min. with ..... ft drawdown after ..... hrs.
Artesian flow ..... g.p.m. Date .....
Temperature of water 51.5° Was a chemical analysis made? Yes ☒ No ☐

(10) WELL LOG:

Formation: Describe by color, character, size of material and structure, and show thickness of aquifers and the kind and nature of the material in each stratum penetrated, with at least one entry for each change of formation.

MATERIAL		FROM	TO
Brn silt with gravel	3100	0	5
Brn silty sand and gvl	2130	5	11
Lt. brn silty sand and gvl		11	21
Gravelly gray silt	1300	21	40
Sand and gvl in gray silt matrix		40	72
V. compact sand, gvl, cobble, boulders	4000		
in silt and clay matrix, till		72	186
Sand and gvl, water	2100	186	189
Sand and gravel in silt matrix, till	7213	189	211
Gray silt and silty clay	3000	211	302
Silt with sand seams, seepage	320W	302	355
Silt and sand, minor water, laminated		355	467
Gray silt	3000	467	520
Silt with sandy silt layers, seepage	320	520	600
Sandy silt, becomes clayey + gvl, decreasing		600	640
Gray silt and clay	3000	640	700
Sandy silt, seepage	320W	700	790
Silty sand, woody, minor water		790	830
Sand and gvl, silty, woody, water		830	870
Sand and gvl	2130		
Gravelly sand layered with sand + gvl, occ. matrix, water	2130	870	910
Gravelly sand with silt matrix, woody, water		910	925
Sand + gvl to sandy gvl, water	2100	925	955

To be sold to King County WD 122 in late 1990

Prepared by Robinson + Noble, Inc.

X - 575 [illegible]
Y - 5279 [illegible]
Z - 612

RECEIVED
AUG 16 1990
DEPT. OF ECOLOGY

Work started May 3, 1990. Completed July 31, 1990

WELL DRILLER'S STATEMENT:

This well was drilled under my jurisdiction and this report is true to the best of my knowledge and belief.

NAME OELKE DRILLING INC. (Person, firm, or corporation) (Type or print)

Address 4312-166th Ave E, Sumner 983[illegible]

[Signed] [signature] (Well Driller)

License No. 0837 Date 8/14 1990

(USE ADDITIONAL SHEETS IF NECESSARY)

SPWSD
-12

RECEIVED SEP 24 1990

SPWSD well 14

File Original and First Copy with Department of Ecology
Second Copy — Owner's Copy
Third Copy — Driller's Copy

WATER WELL REPORT

STATE OF WASHINGTON

Start Card [redacted]

Water Right Permit No _____

(1) OWNER: Name CASCADE WELDBY WATER DISTRICT Address 33015 SE 43rd, FALL CITY, WA 98024

(2) LOCATION OF WELL: County KING NE ¼ NW ¼ Sec 24 T 25 N., R 06E W.M.

(2a) STREET ADDDRESS OF WELL (or nearest address) 1400'N AND 100' W OF CENTER OF SECTION 24

(3) PROPOSED USE: ☐ Domestic ☐ Irrigation ☐ DeWater Industrial ☐ Test Well ☐ Municipal ☒ Other ☐

(4) TYPE OF WORK: Owner's number of well (if more than one) 2

Abandoned ☐ New well ☒ Deepened ☐ Reconditioned ☐ Method: Dug ☐ Cable ☒ Rotary ☐ Bored ☐ Driven ☐ Jetted ☐

(5) DIMENSIONS: Diameter of well 8 inches.
Drilled 346 feet. Depth of completed well 333 ft.

(6) CONSTRUCTION DETAILS:

Casing installed: 12" Diam. from 0 ft. to 176.5 ft.
Welded ☒ 8" Diam. from +2.0 ft. to 305 ft.
Liner installed ☐ Threaded ☐ " Diam. from ft. to ft.

Perforations: Yes ☐ No ☒
Type of perforator used
SIZE of perforations in. by in.
perforations from ft. to ft.
perforations from ft. to ft.
perforations from ft. to ft.

Screens: Yes ☒ No ☐
Manufacturer's Name HOWARD SMITH
Type STAINLESS WIREWRAP Model No.
Diam. 8" TS Slot size 100 from 305 ft. to 314.25 ft.
Diam. 8" TS Slot size 10+20 from 314.25 ft. to 328.5 ft.

Gravel packed: Yes ☐ No ☒ Size of gravel
Gravel placed from ft. to ft.

Surface seal: Yes ☒ No ☐ To what depth? 24.5 ft.
Material used in seal CEMENT GROUT
Did any strata contain unusable water? Yes ☐ No ☒
Type of water? Depth of strata
Method of sealing strata off

(7) PUMP: Manufacturer's Name N/A
Type: H.P.

(8) WATER LEVELS: Land-surface elevation above mean sea level 480 ft.
Static level 244.5 ft. below top of well Date 8/30/90
Artesian pressure lbs. per square inch Date
Artesian water is controlled by (Cap, valve, etc.)

(9) WELL TESTS: Drawdown is amount water level is lowered below static level
Was a pump test made? Yes ☒ No ☐ If yes, by whom? Hokkaido/RAN
Yield: 105 gal./min. with 38.6 ft. drawdown after 12.5 hrs.
" " " "
" " " "

Recovery data (time taken as zero when pump turned off) (water level measured from well top to water level)

Time	Water Level	Time	Water Level	Time	Water Level
10 min	246.3	100	255.45		
15	249.5	270	251.8		
60	257.7	960	248.9		

Date of test 8/30-31/90

Bailer test gal./min. with ft. drawdown after hrs.
Airlift gal./min. with stem set at ft. for hrs.
Artesian flow g.p.m. Date
Temperature of water 48 Was a chemical analysis made? Yes ☒ No ☐

(10) WELL LOG or ABANDONMENT PROCEDURE DESCRIPTION

Formation: Describe by color, character, size of material and structure, and show thickness of aquifers and the kind and nature of the material in each stratum penetrated, with at least one entry for each change of information.

MATERIAL		FROM	TO	
BROWN FILL W/ GRAVEL	9	0	8	
BROWN TIGHT GRAVEL	1000	8	12	
TAN CEMENTED SAND + GRAVEL W/ BOULDERS		12	35	
GOLDEN BROWN SILTBOUND SAND + GRAVEL		35	42.5	
TAN COARSE SAND + GRAVEL, W/ SILT BINDER		42.5	46	
GOLD/BROWN COARSE SAND + GRAVEL, W/ BINDER		46	52	
TAN CEMENTED GRAVEL, TILL-LIKE	4000	52	78	
GOLDEN BROWN SILTY GRAVEL	1300	78	80	
" " SILTY SANDY CLAY W/ MINOR GVL		80	84	321c
" " SILTY SANDY CLAY W/ MINOR GVL		84	97	
BROWN SAND W/ GRAVEL IN SILT MATRIX		97	110	213c
TAN/GRAY CEMENTED GRAVEL		110	121	
BROWN GRAVEL, COBBLES, W/ SAND + SILT		121	152	
" DIRTY SAND + SOME GRAVEL		152	157	400
" TIGHT SAND + GRAVEL, TRACE BINDER		157	240	
BLUE/GRAY CEMENTED GRAVEL		240	246	
SAND + GRAVEL, TIGHT, TRACE WATER		246	248	210
BLUE/GRAY CEMENTED SAND + GRAVEL		248	256	
" SAND + GRAVEL, BINDER LAYERS, TRACE WATER		256	267	321
" DIRTY SAND + GRAVEL		267	269	
" MEDIUM-COARSE SILTY SAND		269	271	230
" FINE-MED SAND, SOME GVL, TRACE WATER		271	275	210
GRAY SILTY SAND + GRAVEL		275	278	213
" CLAY W/ PEAT		278	281	500
" F-M SILTY SAND, MINOR GRAVEL, W.B.		281	285	
" F-M SAND		285	290	230
" F-M SILTY SAND W/ PEAT		290	298	
" F-M SAND + GRAVEL, W.B.		298	302	
" SAND + GRAVEL, W.B.		302	316	210
" M-C SAND W/ GVL W.B.		316	328	
GRAY CLAY		328	346	500

X - 576,597
Y - 5277,039
Z - 480

Prepared by Joel W. Purdy
Robinson + Noble, Inc

Work started 7/24, 19. Completed 8/31, 1990

WELL CONSTRUCTOR CERTIFICATION:

I constructed and/or accept responsibility for construction of this well, and its compliance with all Washington well construction standards. Materials used and the information reported above are true to my best knowledge and belief.

NAME Hokkaido Drilling + Developing Corp. (PERSON, FIRM, OR CORPORATION) (TYPE OR PRINT)

Address 10416 244th STE GRAHAM, WA 98338

(Signed) [signature] (WELL DRILLER) License No. 1146

Contractor's Registration No PORKADI783 Date Sept 14, 1990

(USE ADDITIONAL SHEET

SPWSD

well 14

Washington State Department of Health

DOH DISTRIBUTION SYSTEM REPORT FORM

Instructions on back

1. System Name : _____ System ID# _____
Reporting Month/Year ____/____

Date	Disinfection Residuals			Lead/Copper Water Quality Parameters		
	2. # Sites Sampled	3. Lowest residual (mg/l)	4. # Samples Residual Not Detected	5. Sites Sampled (1-10)	6. Sites with daily pH values[1] below	7. Notes
1						
2						
3						
4						
5						
6						
7						
8						
9						
10						
11						
12						
13						
14						
15						
16						
17						
18						
19						
20						
21						
22						
23						
24						
25						
26						
27						
28						
29						
30						
31						
Totals						

[1]The daily value is calculated by averaging all of the results measured at the sampling site during the day.

8. Reported By _____ Date _____

Title _____ Operator Certification # _____

Signature _____

Return completed report to DOH Regional Office within 10 days of the end of the reporting month.

CDM®

consulting · engineering · construction · operations

®CDM is a registered trademark of Camp Dresser & McKee Inc.

UNREGULATED CONTAMINANT MONITORING RULE 3
SAMMAMISH PLATEA WATER & SEWER DISTRICT RESULTS

MRL = Method Reporting Limit, MDL = Adjusted Method Detection Limit, ND = Not Detected

UCMR3		3/10/2015	3/30/2015	9/3/2015
	Sample Point ID	S07 Corr Control Well 7	S07 Corr Control Well 7	S07 Corr Control Well 7
PARAMETERS	MDL (ug/L)			
Perfluorinated Compounds (537)				
Perfluorobutanesulfonic acid	0.030		<0.030	<0.030
Perfluoroheptanoic acid	0.0033		<0.0033	<0.0033
Perfluorohexanesulfonic acid	0.010		0.010 J	0.019 J
Perfluorononanoic acid	0.00067		<0.00067	<0.00067
Perfluorooctanesulfonic acid	0.0013		<0.0013	0.028 J
Perfluorootanoic acid	0.00067		<0.00067	<0.00067
Hormones (539)				
4-Androstene-3, 17-dione	0.000096		<0.000094	<0.000099
Equilin	0.0012		<0.0012	<0.0013
17b-Esradiol	0.00012		<0.00012	<0.00013
Estrone	0.00064		<0.00063	<0.00066
17a-Ethynylestradiol	0.00029		<0.00028	<0.00030
16-a Hydroxyestradiol (Estriol)	0.00026		<0.00025	<0.00027
Testosterone	0.000032		<0.000031	<0.000033
MET ICPMS UCMR (200.8)				
Chromium	0.067	0.14 J		0.095 J
Cobalt	0.33	<0.33		<0.33
Molybdenum	0.33	<0.33		<0.33
Strontium	1.0	94.7		87.4
Vanadium	0.067	0.71		0.84
MSS 1,4 Dioxane (522)				
1,4-Dioxane (p-Dioxane)	0.023		<0.023	<0.023
MSV (524.3)				
Bromochloromethane	0.020		<0.020	<0.020
Bromomethane	0.067		<0.067	<0.067
1,3-Butadiene	0.033		<0.033	<0.033
Chlorodifluoromethane	0.027		<0.027	<0.027
Chloromethane	0.067		<0.067	<0.067
1,1-Dichloroethane	0.010		<0.010	<0.010
1,2,3-Trichloropropane	0.010		<0.010	<0.010
Hexavalent Chromium (218.7)				
Chromium, Hexavalent	0.010		0.083	0.11
Oxihalide IC Anions 28d (300.1)				
Chlorate	10.0		39.3	73.0

UCMR3 Continued

UCMR3		Sample Date 9/3/2015		
Sample Point ID		S01	S07 Corr Control	S11
PARAMETERS	MDL (ug/L)	Well 1	Well 7 (same as above)	Well 10
Perfluorinated Compounds (537)				
Perfluorobutanesulfonic acid	0.030	<0.030	<0.030	<0.030
Perfluoroheptanoic acid	0.0033	<0.0033	<0.0033	<0.0033
Perfluorohexanesulfonic acid	0.010	<0.010	0.019J	<0.010
Perfluorononanoic acid	0.00067	<0.00067	<0.00067	<0.00067
Perfluorooctanesulfonic acid	0.0013	<0.0013	0.028J	<0.0013
Perfluorootanoic acid	0.00067	<0.00067	<0.00067	<0.00067
Hormones (539)				
4-Androstene-3, 17-dione	0.000096	<0.000095	<0.000099	<0.000096
Equilin	0.0012	<0.0012	<0.0013	<0.0012
17b-Esradiol	0.00012	<0.00012	<0.00013	<0.00012
Estrone	0.00064	<0.00064	<0.00066	<0.00064
17a-Ethynylestradiol	0.00029	<0.00029	<0.00030	<0.00029
16-a Hydroxyestradiol (Estriol)	0.00026	<0.00026	<0.00027	<0.00026
Testosterone	0.000032	<0.000031	<0.000033	<0.000032
MET ICPMS UCMR (200.8)				
Chromium	0.067	0.32	0.095J	0.54
Cobalt	0.33	<0.33	<0.33	<0.33
Molybdenum	0.33	<0.33	<0.33	<0.33
Strontium	1.0	88.6	87.4	85.5
Vanadium	0.067	1.8	0.84	1.8
MSS 1,4 Dioxane (522)				
1,4-Dioxane (p-Dioxane)	0.023	<0.023	<0.023	<0.023
MSV (524.3)				
Bromochloromethane	0.020	<0.020	<0.020	<0.020
Bromomethane	0.067	<0.037	<0.067	<0.067
1,3-Butadiene	0.033	<0.033	<0.033	<0.033
Chlorodifluoromethane	0.027	<0.027	<0.027	<0.027
Chloromethane	0.067	<0.067	<0.067	<0.067
1,1-Dichloroethane	0.010	<0.010	<0.010	<0.010
1,2,3-Trichloropropane	0.010	<0.010	<0.01	<0.010
Hexavalent Chromium (218.7)				
Chromium, Hexavalent	0.010	0.37	0.11	0.58
Oxihalide IC Anions 28d (300.1)				
Chlorate	10.0	36.0	73.0	82.4

UCMR3 Continued

UCMR3		Sample Date 9/3/2015		9/30/2015
Sample Point ID		S12	00018/S18	S08
PARAMETERS	MDL (ug/L)	Well 4R	Wells 2.1+2.2	Well 12
Perfluorinated Compounds (537)				
Perfluorobutanesulfonic acid	0.030	<0.030	<0.030	<0.030
Perfluoroheptanoic acid	0.0033	<0.0033	<0.0033	<0.0033
Perfluorohexanesulfonic acid	0.010	<0.010	<0.010	<0.010
Perfluorononanoic acid	0.00067	<0.00067	<0.00067	<0.00067
Perfluorooctanesulfonic acid	0.0013	<0.0013	<0.0013	<0.0013
Perfluorootanoic acid	0.00067	<0.00067	<0.00067	<0.00067
Hormones (539)				
4-Androstene-3, 17-dione	0.000096	<0.000097	<0.000096	<0.000097
Equilin	0.0012	<0.0013	<0.0012	<0.0013
17b-Esradiol	0.00012	<0.00013	<0.00012	<0.00013
Estrone	0.00064	<0.00065	<0.00064	<0.00065
17a-Ethynylestradiol	0.00029	<0.00029	<0.00029	<0.00029
16-a Hydroxyestradiol (Estriol)	0.00026	<0.00026	<0.00026	<0.00026
Testosterone	0.000032	<0.000032	<0.000032	<0.000032
MET ICPMS UCMR (200.8)				
Chromium	0.067	<0.067	0.074J	<0.067
Cobalt	0.33	<0.33	<0.33	<0.33
Molybdenum	0.33	0.73J	<0.33	0.52J
Strontium	1.0	88.1	180	80.6
Vanadium	0.067	<0.067	1.9	1.7
MSS 1,4 Dioxane (522)				
1,4-Dioxane (p-Dioxane)	0.023	<0.023	<0.023	<0.023
MSV (524.3)				
Bromochloromethane	0.020	<0.020	<0.020	<0.020
Bromomethane	0.067	<0.067	<0.067	<0.067
1,3-Butadiene	0.033	<0.033	<0.033	<0.033
Chlorodifluoromethane	0.027	<0.027	<0.027	<0.027
Chloromethane	0.067	<0.067	<0.067	<0.067
1,1-Dichloroethane	0.010	<0.010	<0.010	<0.010
1,2,3-Trichloropropane	0.010	<0.010	<0.010	<0.010
Hexavalent Chromium (218.7)				
Chromium, Hexavalent	0.010	<0.010	0.078	<0.03
Oxihalide IC Anions 28d (300.1)				
Chlorate	10.0	202	35.9	42.4

UCMR3 Continued

UCMR3		Sample Date 9/3/2015 – Distribution System		
Sample Point ID		MR001	MR002	MR005
PARAMETERS	MDL (ug/L)			
MET ICPMS UCMR (200.8)				
Chromium	0.067	0.097J	0.13J	0.094J
Cobalt	0.33	<0.33	<0.33	<0.33
Molybdenum	0.33	<0.33	<0.33	<0.33
Strontium	1.0	154	84.3	81.9
Vanadium	0.067	1.5	0.83	0.78
Hexavalent Chromium (218.7)				
Chromium, Hexavalent	0.010	0.098	0.14	0.11
Oxihalide IC Anions 28d (300.1)				
Chlorate	10.0	41.9	56.4	55.4

UCMR3		Sample Date 9/3/2015 – Distribution System		
Sample Point ID		MR006	MR007	
PARAMETERS	MDL (ug/L)			
MET ICPMS UCMR (200.8)				
Chromium	0.067	<0.067	0.10J	
Cobalt	0.33	<0.33	<0.33	
Molybdenum	0.33	0.77J	<0.33	
Strontium	1.0	92.7	182	
Vanadium	0.067	<0.067	1.7	
Hexavalent Chromium (218.7)				
Chromium, Hexavalent	0.010	<0.010	0.10	
Oxihalide IC Anions 28d (300.1)				
Chlorate	10.0	185	39.9	

Appendix K

Application for Water Service

This page intentionally left blank.

SAMMAMISH PLATEAU WATER AND SEWER DISTRICT
1510 228TH AVENUE SE
SAMMAMISH WASHINGTON 98075
Phone: 425-392-6256

WATER SERVICE APPLICATION

DATE _____ ACCOUNT # _____ **WATER APPLICATION #** _____

SERVICE ORDER # _ METER # _____

SEWER PERMIT # _____

SERVICE ADDRESS _____CITY_____ ZIP _____

TAX LOT # _____ SUBDIVISION NAME _____ LOT # _____

OWNER'S NAME_____ PHONE # (_____) - _____

MAILING ADDRESS _____ CITY_____STATE _____ZIP _____

The undersigned applicant indicates that he/she is the owner ("Owner") of the property referenced above and hereby makes application for water service from Sammamish Plateau Water and Sewer District ("District"), and in consideration that the District install the service applied for and furnish water, the Owner agrees to pay for the same at the rate and in the manner as provided or to be hereafter provided and to abide by such other rules and regulations as may be made by resolution of the District Board of Commissioners ("Board"). Owner further agrees that the District shall have the right to charge and collect such rates and enforce such penalties as may be provided by resolution of the said Board and to temporarily discontinue the service at any time without notice. And it is further agreed that in case the supply of water shall be interrupted or fail by reason of accident or any other cause whatsoever, the District shall not be liable for damages for such interruption or failure nor shall such failure or interruption for any reasonable period of time be held to constitute a breach of contract on the part of the District or in any way relieve the Owner from performing the obligations of this contract. And the District, in consideration that the Owner pay the charges and the rates and abide by rules and regulations as herein set forth, agrees to install the service and furnish water to the premises herein described according to the terms and conditions hereof.

Water Pressure: The District's system has been designed to provide normal static water pressures between 35 and 115 pounds per square inch (psi), measured at the water meter. The particular pressure at any meter depends on the location of the meter in the system. The Owner assumes the responsibility to determine exact water pressure at his meter. Where pressure exceeds 80 psi, Owner should install an appropriate type pressure regulator with strainer at the house (Reference: Uniform Plumbing Code, current edition, Section. 608.2). If Owner desires higher pressure than is provided, it is the Owner's responsibility to install the facilities necessary to achieve the desired pressure.

Flow Rate: The standard water service and meter are sized to meet normal domestic household flow requirements. A larger meter and service connection may be necessary if higher flow rates are required (such as an irrigation system, swimming pool filling, fire sprinklers, etc.).

Any previous claim for tapping rights Owner may have had against any part of the water system now operated as Sammamish Plateau Water and Sewer District is hereby declared void, and in lieu thereof, Owner hereby accepts this Tapping Certificate from Sammamish Plateau Water and Sewer District and agrees to abide by its rules and regulations.

OWNER VERIFIES THAT HE/SHE HAS READ THE TERMS AND CONDITIONS CONTAINED ON THIS APPLICATION AND AGREES TO ABIDE BY THEM.

SIGNATURE _____ **DATE**_____

Printed Name _____ **DISTRICT SIGNATURE**_____

FEES: METER PLACEMENT – Meter Size _____ $_____
☐ Install / ☐ Drop / ☐ Fire Sprinklers

GENERAL FACILITIES CHARGE – Meter Size ____ $_____

REGIONAL CAPITAL FACILITIES CHARGE – Meter Size ____ $_____

LOCAL FACILITY CHARGE $_____
☐ Standard / ☐ Special / ☐ Reimbursement Agreement
☐ Existing Facility / ☐ Future Facility
☐ Frontage _____ LF / ☐ Area _____ Acre
☐ Other _____

RIGHT-OF-WAY PERMIT FEE $_____

OTHER _____ $_____

RECEIPT NUMBER _____ **TOTAL** **$**_____

☐ PADLOCK METER ☐ WELL DISCONNECT

Comments:_____

This page intentionally left blank.

Appendix L

Cross-Connection Control Program

This page intentionally left blank.

SAMMAMISH PLATEAU WATER & SEWER DISTRICT
KING COUNTY, WASHINGTON

RESOLUTION NO. 3340

RESOLUTION OF THE BOARD OF COMMISSIONERS OF SAMMAMISH PLATEAU WATER AND SEWER DISTRICT, KING COUNTY, WASHINGTON, REVISING AND READOPTING A CROSS CONNECTION CONTROL PROGRAM AS SET FORTH IN THE DISTRICT'S WATER COMPREHENSIVE PLAN; AND RESCINDING RESOLUTION NO. 1327.

WHEREAS, the Sammamish Plateau Water & Sewer District of King County, Washington ("District") provides water supply to residents and property located within its corporate and service area boundaries; and

WHEREAS, the District is required by law to develop and implement a cross connection control program to eliminate cross connections in the District's public water supply system whenever possible or, when cross connections cannot be eliminated, to control such cross connections by installation of approved backflow prevention devices commencement with the degree of hazard relating to the cross connection; and

WHEREAS, Washington Administrative Code 246-290-490 (WAC) requires that all community water systems comply with the cross connection control requirements specified in such regulations, to include a written description of the cross connection control program in the water system plan for a community water system required under WAC 246-290-100 and to include the minimum program elements described in WAC 246-290-490(3) in such cross connection control program; and

WHEREAS, pursuant to RCW 57.08.005(3), the District has full authority to regulate and control the use, content, distribution and price of water supplied by the District to it's customers and properties; and

WHEREAS, the Water Comprehensive Plan adopted by the District Board of Commissioners by Resolution No. 2768 on May 29, 2001 ("Water Comprehensive Plan") includes a written description of the District's cross connection control program as currently set forth in Appendix J of the Water Comprehensive Plan, and the District has updated and revised its cross connection control program, such revised and updated cross connection control program being attached as Exhibit A and incorporated herein by this reference (the "Revised Cross Connection Control Program"); and

WHEREAS, prior to the District's adoption of the Water Comprehensive Plan which included a cross connection control program, the District adopted policies and procedures relating to cross connection control as set forth in Resolution No. 1327 adopted by the District Board of Commissioners on April 1, 1991; and

WHEREAS, the purpose of the District's Revised Cross Connection Control Program is to protect the public water system from contamination via cross connections by eliminating cross connections or, when cross connections cannot be eliminated, by controlling cross connections through the installation of backflow prevention assemblies; and the development and implementation of the Revised Cross Connection Control Program is necessary to protect public health and safety; now, therefore,

BE IT RESOLVED, by the Board of Commissioners of the Sammamish Plateau Water & Sewer District as follows:

1. The Revised Cross Connection Control Program as set forth in Exhibit A attached hereto is hereby approved and adopted for implementation.

2. All District resolutions, policies and procedures, including Resolution No. 1327, are hereby rescinded, superseded and/or amended to be in accordance with the Revised Cross Connection Control Program approved and adopted herein.

3. This resolution shall be effective the date set forth below.

ADOPTED by the Board of Commissioners of Sammamish Plateau Water & Sewer District, King County, Washington, at the regular open public meeting thereof held on the 18th day of July, 2005.

Individual Commissioner's Vote on this Resolution:

Approved:	_____	_____
Opposed:	_____	Stanley E. Stone
Abstained:	_____	President and Commissioner
Absent:	_____	
Approved:	_____	_____
Opposed:	_____	W. F. Stevlingson
Abstained:	_____	Vice President and Commissioner
Absent:	_____	
Approved:	_____	_____
Opposed	_____	Thomas C. Harman
Abstained:	_____	Secretary and Commissioner
Absent	_____	
Approved:	_____	_____
Opposed:	_____	Lloyd J. Warren
Abstained:	_____	Commissioner
Absent:	_____	
Approved:	_____	_____
Opposed:	_____	Mary Shustov
Abstained:	_____	Commissioner
Absent:	_____	

APPENDIX L

Cross-Connection Control Program

1. Purpose

The Sammamish Plateau Water and Sewer District has developed a cross-connection control program under the requirements for Group A Water Systems (WAC 246-290-490). The purpose of this program is to protect the health of water consumers of the public water system. This cross-connection control program addresses this requirement by establishing minimum operating policies and backflow prevention assembly installation and testing practices and procedures. It is structured such that it may be supplemented with published documents and materials developed by the District for its specific use. The authority to enforce these practices and policies is established in District Resolution 1327 or its future revisions.

2. Responsibilities

a. The Sammamish Plateau Water and Sewer District

i. The District or its designated representative shall prevent the contamination of the water distribution system by inspecting cross connections, providing guidance for new installations and existing connections, maintaining records on backflow prevention devices, and responding to customer inquiries to meet the requirements of the state regulations in cross-connection control.

ii. The District's responsibility for cross-connection control shall begin at the water supply source, include all the public water treatment, storage, and distribution facilities, and end at the point of delivery to the consumer's water system, which begins at the downstream end of the service connection or water meter on the public right-of-way or utility-held easement.

b. Water Customer

i. The water customer shall be responsible for identifying and eliminating cross connections or controlling them through the installation, regular testing, and maintenance of approved backflow prevention assemblies.

ii. The water customer shall be responsible for providing the necessary information, scheduling, and providing access for inspection (as required) to allow a determination of cross-connection potential and the necessary control methods.

iii. The water customer is responsible for notifying the District of any assembly that the customer believes is no longer required.

iv. The water customer is responsible for all costs associated with the inspection, testing, repair, and replacement of backflow prevention assemblies.

3. Applicability of Regulations and References

a. The control or elimination of cross connections shall be in accordance with the most current revisions of the following state, county, and local rules and regulations:

i. Cross-Connection Control WAC 246-290-490

ii. Washington State Plumbers Code RCW 18.106

iii. Washington State Building Code RCW 19.27

iv. Washington State Public Water Systems Mandate RCW 70.119A.060

v. Washington State Powers and Duties of the State Board of Health RCW 43.20.050

vi. Sammamish Plateau Water and Sewer District Resolution 1327

b. The polices, procedures, and criteria for determining appropriate levels of protection shall be in accordance with the most current editions of the following references:

i. *Cross-Connection Control Manual: Accepted Procedure and Practice* published by the Cross-Connection Control Committee of the Pacific Northwest Section of the American Water Works Association

ii. *Manual of Cross-Connection Control* published by the Foundation for Cross-Connection Control and Hydraulic Research, University of Southern California

iii. *Recommended Practice for Backflow Prevention and Cross-Connection Control* (AWWA M14) published by the American Water Works Association

c. Interpretation of the above regulations and references is subject to the discretion of the District or its designated representatives.

4. Operating Procedures

a. Guidelines for Premises Isolation:

i. The District shall rely on premises isolation as defined in WAC 246-290-010 for cross-connection control.

ii. Premises isolation is the District’s recommended method of cross-connection control, where an approved air gap or approved backflow prevention assembly is installed at or near the service connection or an alternative location acceptable to the District to isolate the consumer's water system from the District's distribution system.

iii. If the in-premises isolation method is used, that is, as in the case of residential irrigation systems, residential swimming pools, spas, decorative ponds and boilers, it must provide a level of protection commensurate with the District's assessed degree of hazard. In-premises isolation employs an approved air gap or approved backflow prevention assembly that is located within the property lines of the customer's premises, which is generally a plumbing fixture. If access for inspection is denied by the water customer and there is not an immediate hazard present, the District will install an air gap (AG) or reduced pressure backflow assembly (RPBA) at the property line or immediately upstream of the area where access has been denied. The customer will assume costs.

b. Guidelines for Type and Location of Protection

i. The type of backflow protection required shall depend on the degree of hazard. The final hazard determined shall be made by the District or its designated representative.

A. For customers requesting new service connections, an initial evaluation of the premises' planned or future water service in regards to cross connections shall be made by the District or its designated representative. Proper selection and installation of a backflow prevention assembly, as determined by the District or its designated representative, shall be a condition of allowing new water service connection.

B. For existing service connections, the District will perform an initial inspection according to a plan developed by the District. The District will notify the customer of the required inspection, and the customer is responsible scheduling the inspection.

C. For all service connections, upon initial evaluation, an annual reevaluation of hazard shall occur in accordance with Section 6 of this program.

ii. An Air Gap (AG), Reduced Pressure Backflow Assembly (RPBA), or a Reduced Pressure Detector Assembly (RPDA) shall be used for services that present high health hazards, where back pressure and back siphonage may occur. These premises are listed, but not limited to, those in Table 9, High Health Cross-Connection Hazard Requiring Premises Isolation by AG or RPBA, in WAC 246-290-490.

iii. A Double Check Valve Assembly (DCVA) or a Double Check Detector Assembly (DCDA) shall be used for low health hazards where back pressure and back siphonage may occur. Higher levels of protection, that is AG, RPBA, or RPDA may be installed but would not be required.

iv. A Pressure Vacuum Breaker Assembly (PVBA) or Spill Resistant Vacuum Breaker Assembly (SVBA) would be required for high and low health hazards for backsiphonage only. Higher levels of protection, i.e., AG, RPBA, RPDA, DCVA, or DCDA, may be installed, but would not be required.

c. Guidelines for Eliminating Cross Connections

i. Cross connections shall be eliminated whenever possible.

ii. When cross connections cannot be eliminated, an approved air gap or an approved backflow prevention assembly, commensurate to the degree of hazard as determined by the District or its designated representative shall be installed in accordance with Section 5 of this program.

5. Installation Procedures

a. General

i. The criteria for assembly installation practices shall be in accordance with the current edition of the following manuals: *Accepted Procedure and Practice,* published by the Cross-Connection Control Committee of the Pacific Northwest Section of the American Water Works Association; *Manual of Cross-Connection Control* published by the Foundation for Cross-Connection Control and Hydraulic Research, University of Southern California; *Recommended Practice for Backflow Prevention and Cross-Connection Control* (AWWA M14) published by the American Water Works Association, and the Sammamish Plateau Water and Sewer Districts *Technical Specifications Manual.*

ii. The installer is responsible for notifying the District of newly installed assemblies.

iii. All new installations shall be inspected and tested by a state certified backflow assembly tester.

iv. Assemblies shall be accessible for testing and maintenance. They shall be installed no higher than five (5) feet above the floor or ground surface to the centerline of the assembly, or else be provided with an OSHA approved work platform for assembly maintenance and testing.

v. Assemblies shall be protected against freezing, flooding, and mechanical damage.

vi. Assemblies shall not be installed in any enclosure or area containing fumes which are corrosive or toxic.

b. Installation of Prevention Devices

i. Approved Air Gaps (as defined by the Washington State Department of Health Drinking Water Regulations Relating to Cross-Connection):

A. An "approved air gap" means a physical separation between the free flowing end of a potable water supply pipeline and the overflow rim of an open or nonpressurized receiving vessel. To be an air gap approved by Washington State Department of Health (DOH), the separation must be at least:

- Twice the diameter of the supply piping measured vertically from the overflow run of the receiving vessel, and in no case be less than one-inch, when unaffected by vertical surfaces (sidewalls);
- Three times the diameter of the supply piping, if the horizontal distance between the supply pipe and a vertical surface (sidewall) is less than or equal to three times the diameter of the supply pipe, or if the horizontal distance between the supply pipe and intersecting vertical surface (sidewalls) is less than or equal to four times the diameter of the supply pipe and in no case less than one and one-half inches.

ii. Reduced Pressure Backflow Assembly (RPBA) and Reduced Pressure Detector Assembly (RPDA)

A. RPBAs/RPDAs shall be installed horizontally, unless they are approved by the State for vertical installation.

B. RPBAs/RPDAs shall be installed with minimum clearances of 12 inches (larger RPBAs may require more clearance) in front of test cocks, check valves, and relief valve covers to facilitate testing and maintenance. If an assembly is installed in an area with limited accessibility, a crawl space, a minimum of 24 inches clearance in front of test cocks shall be provided.

C. RPBAs/RPDAs shall be installed a minimum of 12 inches above ground or flood level, whichever is greater.

D. RPBAs/RPDAs shall not be installed in a below grade pit, vault, or box.

E. RPBAs/RPDAs shall be installed in a location where discharge from the relief port will not be objectionable, and shall be provided with an approved air-gapped drain which will reasonably handle the full discharge of the relief port.

iii. Double Check Valve Assembly (DCVA) and Double Check Detector Assembly (DCDA)

A. DCVAs/DCDAs shall be installed horizontally, unless they are approved by the State for vertical installation.

B. DCVAs/DCDAs shall be installed with minimum clearances of 12 inches (larger DCVAs/DCDAs may require more clearance) in front of test cocks and check valves to facilitate testing and maintenance. If an assembly is installed in an area with limited accessibility, a crawl space, a minimum of 24 inches clearance in front of test cocks shall be provided.

C. DCVAs/DCDAs shall be installed at such a location that they will not become submerged due to weather related conditions such as flooding.

iv. Pressure Vacuum Breaker Assembly (PVBA) and Spill Resistant Pressure Vacuum Breaker Assembly (SVBA)

A. PVBAs / SVBAs shall be installed to prevent backflow caused by backsiphonage only.

B. A PVBA shall only be installed in a vertical configuration, a minimum of 12 inches above the highest downstream piping.

C. A SVBA shall only be installed in a vertical configuration a minimum of 12 inches above the highest downstream piping. The SVBA shall be treated the same as a PVBA because of the potential for the SVBA to be replaced by a PVBA. When the SVBA is located inside a building, the concern is not as great about its installation in a location where the occasional spitting from the air inlet port could be a problem when the assembly is first pressurized. The SVBA is spill resistant, not spill proof.

6. Inspection and Testing Procedures

a. General

i. Backflow prevention assemblies shall be inspected and tested at the time of:

A. Initial installation. If an assembly is installed prior to the enactment of this program, an initial inspection time should be scheduled.

B. After the assembly is repaired or moved.

C. Annually after the initial installation.

D. As required by the District if testing indicates repeated failures.

ii. Annual testing of backflow assemblies shall be per WAC 246-290-490. The District may require more frequent testing of certain facilities.

iii. Testing procedures shall be in accordance with the requirements of the Washington State Department of Health.

b. Inspection and testing of new installations

i. All new assemblies shall be tested upon initial installation.

ii. The District shall notify property owners of required backflow preventers including air gaps (AGs). The District will notify property owners of required inspection for all new installations of backflow preventers, including AGs in the District's service area.

iii. The installer is responsible for notifying the District of newly installed assemblies.

iv. If at the inspection, the newly installed backflow preventer fails its performance test, the installer and/or owner of the backflow prevention assembly must have the repair completed, and provide evidence of a satisfactory performance test by a state-certified Backflow Assembly Tester, submitted to the District within 30 days of the initial unsatisfactory performance test. All test reports, whether satisfactory or unsatisfactory, must be submitted to the District.

v. The District or its designated representative shall assess the degree of hazard prior to and after the elimination and removal of any assembly. An assembly no longer needed and for which the site was inspected, will be removed from the District's database of active backflow prevention devices.

vi. The District will levy a standard charge, in accordance with District Resolution 1327, against the customer's water service account for inspection of any installed or removed backflow prevention assemblies.

c. Inspecting and testing of existing installations

i. All assemblies shall be tested annually by a certified Backflow Assembly Tester, who has on file a current certificate proving verification of accuracy of his/her test equipment at the District. If this information is not on file, the tester shall submit this verification to the District prior to submitting any test results.

ii. The District will notify all water customers responsible for assemblies of record of the requirement for testing not less than 60 days before the test is required.

iii. Results indicating satisfactory performance must be forwarded to the District within 60 days from the date of notification.

iv. If satisfactory results have not been received within 60 days of notification, a second, certified letter will be sent, requesting satisfactory testing reports be forwarded to the District within

10 days, with notification of a specific date of termination of water service, if reports are not received within 10 days. The District will levy a standard charge against the customer's water service account for each overdue backflow preventer.

v. If satisfactory test results have not been received within 10 days of the certified letter being sent, a notification of water shutoff will be hand delivered, if necessary, to the occupants of the building to which water is scheduled for termination. If the District determines a high health hazard, termination will follow immediately thereafter. If the District determines that there is a low non-health hazard and no imminent danger, the following corrective measures will be followed:

A. Denying or discontinuing water service to a customer's premises until the cross-connection hazard is eliminated or controlled to the satisfaction of the District. Shutoff will follow within 72 hours of notice.

B. Requiring the consumer to install approved backflow preventer for premises isolation commensurate to the degree of hazard.

C. The District will install an approved backflow preventer for premises isolation commensurate with the degree of hazard.

vi. The District will levy a standard charge against the customer's water service account for each notification of water shutoff and/or installation of a backflow prevention assembly in order to achieve premises isolation. Water service will be terminated if no action is satisfactorily taken to test and/or repair and retest the backflow assembly(ies) and will remain discontinued until the testing is successfully completed and satisfactory test reports are provided to the District. The District will levy a standard charge against the customer's water service account for each shut-off and turn-on action required at the affected address.

vii. The District or its designated representative may require testing more often than annually or may field verify the test results.

d. Inspection and testing of repaired or replaced installations

i. Testing is required of any assembly that is repaired, replaced, or moved due to problems found during the annual test or due to revisions of the plumbing system.

e. Inspections of high hazard sites

i. The District shall assign priorities to high hazard site inspections with special emphasis on the following types of facilities: hospital, schools, clinics, laboratories, piers and docks, mortuaries, sewage treatment plants, food and beverage processing plants, chemical plants using

water process, metal plating industries, petroleum processing or storage plants, car washes, facilities having a non-potable auxiliary water supply, and others specified by the District.

ii. The District shall notify the responsible party of the premises which require inspection.

A. If during the site survey, a cross connection is found that presents, in the opinion of the inspector, an imminent threat to public health, water service to the site shall be immediately terminated and shall remain off until the hazard is corrected.

B. The state-certified cross-connection specialist must provide the property owner and District a written notice of the results of the survey including a list of the cross connections found. If an approved backflow prevention assembly is required on the customer's system, the type and location of the assembly shall be specified in the inspectors written notice. The owner has 30 days after the written notice to have the required backflow prevention assembly(ies) installed and tested.

C. The water customer shall notify the District at the completion of the required work and certification that the backflow assemblies have been installed and tested with a positive test result.

D. If the water customer does not complete the work required in the inspector's letter within the time specified, a certified letter will be sent by the District requiring the water customer to complete the work within a shorter specified time (generally 10 days) and reminding the water customer that it is the District's responsibility to deny water service to anyone who does not comply with backflow protection requirements. The District will levy a standard charge, in accordance with District Resolution 1327, against the customer's water service account for each certified letter sent to the customer.

E. If the water customer does not complete the work within the time specified or does not make special arrangements with the District for an alternate compliance date based on extenuating circumstances, the District will give notice to the water customer of its intention to discontinue water service within 24 hours. The standard District charges for termination of water service will be levied against the customer's water service account.

7. Backflow Incident Response Procedures

a. Due to the severity of cross-connection effects, the District shall respond to backflow incidents immediately, upon receipt of an incident report. The

response time may vary depending on the location of the incident, time and day of the report, and location of the responder, but this time should not be more than 30 minutes, as delineated in the WAC.

8. Quality Control Program

a. General

i. The criteria for tester certification and test kit calibration practices shall be in accordance with the current edition of the following manuals: *Accepted Procedure and Practice,* published by Cross-Connection Control Committee of the Pacific Northwest Section of the American Water Works Association; *Manual of Cross-Connection Control,* published by the Foundation for Cross-Connection Control and Hydraulic Research, University of Southern California; *Recommended Practice for Backflow Prevention and Cross-Connection Control* (AWWA M14), published by the American Water Works Association.

b. Tester Certification and Test Kit Calibration

i. Acceptance of customer's test reports will be contingent upon the District's records for the receipt of records of the state-certified Backflow Assembly Tester and the test kit calibration.

c. Test Reports

i. Sample test reports are attached to this program.

ii. Test Report Submittal Schedule

Connection Type	Results	Test Report Submittal Schedule
New Connection	Satisfactory Results	Submit Test Report at the time of the inspection (within 10 days of inspection date).
	Unsatisfactory Results	Submit Unsatisfactory Test Report at the time of inspection (within 10 days of inspection date). Submit Retest Report within 30 days of the unsatisfactory test date.
Existing Connection	Satisfactory Results	Submit Satisfactory Test Report within 60 days of notification of annual test requirement.
	Unsatisfactory Results	Make necessary repairs and submit Satisfactory Test Report within 60 days of notification of annual test requirement.

9. Records

a. General:

i. The Master List of Service Connections shall be in accordance with WAC 246-290-490(3)(j). Information to be included in the database:

A. Customer address

B. Assessed hazard level

C. Required backflow prevention assembly

b. The District shall maintain an inventory of information as required in WAC 246-290-490(3)(j)(ii) on:

i. Approved Air Gaps used in Lieu of Approved Assemblies

A. Property owner

B. Exact location on premises

C. Assessed degree of hazard

D. Installation date

E. Inspection results and history

F. Name of person conducting inspections

ii. Approved Backflow Assemblies

A. Property owner

B. Exact location on premises

C. Assembly description (type, manufacturer, model, serial number, size, etc.)

D. Assessed degree of hazard

E. Installation date

F. Inspection results and history, test results, and repairs

G. Name of person conducting inspection

iii. Approved AVBs used for irrigation system applications

A. Property owner

B. Exact location on premises

C. Assembly description (manufacturer, model, and size)

D. Installation date

E. Inspection results and history

F. Name of person conducting inspection

iv. Cross-Connection Control Program Summary Reports

v. Backflow Incident Reports

c. Sample reports are provided as attachments.

d. Sample notification letters are provided as attachments.

10. Public Education Program

a. The District shall provide their existing and future water customers with information regarding backflow and backflow prevention, as well as the District's Cross-Connection Control Program. This public education program shall include, but is not limited to:

i. Articles in the District's newsletter

ii. Fact sheets available for new customers and developers

iii. Informational pamphlets and brochures available at the District office

iv. Water quality (Consumer Confidence) reports

11. Improvements Program

a. The District shall prepare staff and delineate resources to meet the requirements of this Cross-Connection Control Program. Their tasks include upgrading their existing procedures to the requirements set in this program and preparing the program so that it will meet the challenges of future water system operations. This shall include, but is not limited to:

i. Dedicating staff to execute and maintain the cross-connection control program

ii. Establishing funds for all new and existing cross-connection program activities

iii. Identification, inspection, and record of all cross-connections

A. New cross connections (First priority)

B. Existing cross connections (Second priority)

iv. Establishing an annual inspection schedule for all new and existing cross connections after the initial inspection.

PROCEDURAL REQUIREMENTS

1. ALL ASSEMBLIES MUST BE ON THE WASHINGTON STATE DEPARTMENT OF HEALTH APPROVED BACKFLOW ASSEMBLY LIST.

2. ALL ASSEMBLIES ARE REQUIRED TO BE TESTED BY A WASHINGTON STATE CERTIFIED TESTER UPON INSTALLATION AND ANNUALLY. IN ADDITION, ASSEMBLIES MUST BE TESTED AFTER REPAIRS, RELOCATION, REINSTALLATION AND AFTER A BACKFLOW INCIDENT. NOTE THAT AIR GAPS INSTALLED IN LIEU OF A REDUCED PRESSURE BACKFLOW ASSEMBLY ALSO REQUIRE ANNUAL INSPECTION. TEST REPORTS MUST BE SUBMITTED IMMEDIATELY TO THE DISTRICT.

3. CONTACT DISTRICT FOR INSPECTION OF ALL NEWLY INSTALLED ASSEMBLIES.

4. A CATALOG CUT PRODUCT SUBMITTAL SHALL BE PROVIDED TO THE DISTRICT PRIOR TO INSTALLATION FOR VERIFICATION OF ASSEMBLY APPROVAL STATUS.

5. WHEN INSTALLING AN ASSEMBLY INSIDE A BUILDING, ENSURE ASSEMBLY IS LOCATED WHERE OCCASIONAL SPITTING FROM THE RELIEF VALVE PORT, A FOULED CHECK, OR WATER FLUSHED OUT DURING THE ANNUAL TEST WILL NOT BE OBJECTIONABLE. PROPER DRAINAGE MUST BE PROVIDED. DISTRICT WRITTEN APPROVAL MUST BE RECEIVED FOR INSIDE INSTALLATIONS.

6. ALL RBPA ASSEMBLIES SHALL BE PROTECTED FROM FREEZING, FLOODING AND MECHANICAL DAMAGE DUE TO WATER HAMMER AND EXCESSIVE PRESSURE BUILD UP.

INSTALLATION REQUIREMENTS

1. CONTACT DISTRICT TO ENSURE YOU ARE INSTALLING THE CORRECT ASSEMBLY FOR THE DEGREE OF HAZARD.

2. ASSEMBLY MUST BE INSTALLED AS A UNIT, INCLUDING TWO SHUT OFF VALVES, RELIEF PORT, TWO CHECK VALVES, AND FOUR TEST COCKS. ALL ASSEMBLIES ARE REQUIRED TO BE AS A UNIT IN THE CONFIGURATION THEY WERE APPROVED BY DOH AND USC.

3. THOROUGHLY FLUSH THE WATER LINE PRIOR TO INSTALLING ASSEMBLIES.

4. ASSEMBLIES MUST BE INSTALLED A MINIMUM OF 12–INCHES FROM THE BOTTOM OF THE RELIEF PORT TO FINISHED GRADE, AND NO HIGHER THAN 5–FEET FROM THE FLOOR TO CENTERLINE OF ASSEMBLY. AN ASSEMBLY INSTALLED MORE THAN 5–FEET ABOVE FLOOR OR GROUND LEVEL MUST HAVE A PERMANENT PLATFORM UNDER IT FOR THE TESTER OR MAINTENANCE PERSON TO STAND ON. THE PLATFORM MUST COMPLY WITH ALL CURRENT AND APPLICABLE SAFETY STANDARDS AND CODES IN EFFECT. ALL ASSEMBLIES MUST BE INSTALLED HORIZONTALLY, UNLESS THEY HAVE WASHINGTON STATE APPROVAL TO BE INSTALLED VERTICALLY. IF INSTALLED IN A VERTICAL CONFIGURATIONS, IT MUST BE A MINIMUM OF 12–INCHES FROM FLOOR, AND NO HIGHER THAN 5–FEET FROM THE FLOOR TO CENTER OF THE #2 SHUT OFF VALVE. ALL ASSEMBLIES MUST MAINTAIN A SUFFICIENT CLEARANCE FROM ANY WALL TO ENSURE ACCESSIBILITY OF MAINTENANCE AND TESTING. SIZES 2–1/2 INCHES AND LARGER IN DIAMETER MAY REQUIRE ADDITIONAL SPACE ON ONE SIDE OF THE ASSEMBLY. ASSEMBLIES 2–1/2 INCHES AND LARGER IN DIAMETER SHALL HAVE SUPPORT BLOCK TO PREVENT FLANGE DAMAGE.

5. REDUCED PRESSURE BACKFLOW ASSEMBLIES SHALL NOT BE INSTALLED BELOW GROUND AT ANYTIME.

6. ASSEMBLIES MUST MEET THE ABOVE REQUIREMENTS TO ENSURE ACCESSIBILITY FOR TESTING, MAINTENANCE AND APPROVAL OF THE DISTRICT. VARIANCE OF ANY INSTALLATION MUST HAVE PRIOR WRITTEN APPROVAL OF THE DISTRICT.

AIR GAP REQUIREMENTS

1. AIR GAP MUST BE TWICE THE INLET DIAMETER OF THE INLET PIPE, MINIMUM OF 1–INCH FOR 1/2" PIPE OR SMALLER.

2. THE AIR GAP MUST PROVIDE A PHYSICAL SEPARATION FROM THE BOTTOM OF THE INLET PIPING TO THE TOP OF THE OVERFLOW RIM OF THE RECEIVING VESSEL.

3. IF INLET PIPING IS CUT DIAGONALLY TO DECREASE SPLASHING, THE AIR GAP SEPARATION IS MEASURED FROM THE BOTTOM OF THE CUT TO THE RECEIVING VESSEL.

4. IF AIR GAP IS LOCATED NEAR SIDEWALLS, THE SEPARATION INCREASES TO THREE TIMES THE INLET DIAMETER OF THE INLET PIPING, MINIMUM OF 1–1/2 INCHES.

REV. 6/9/17

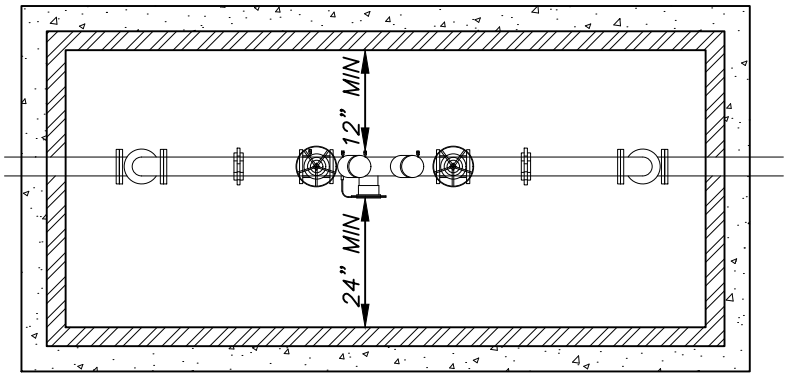

PLAN

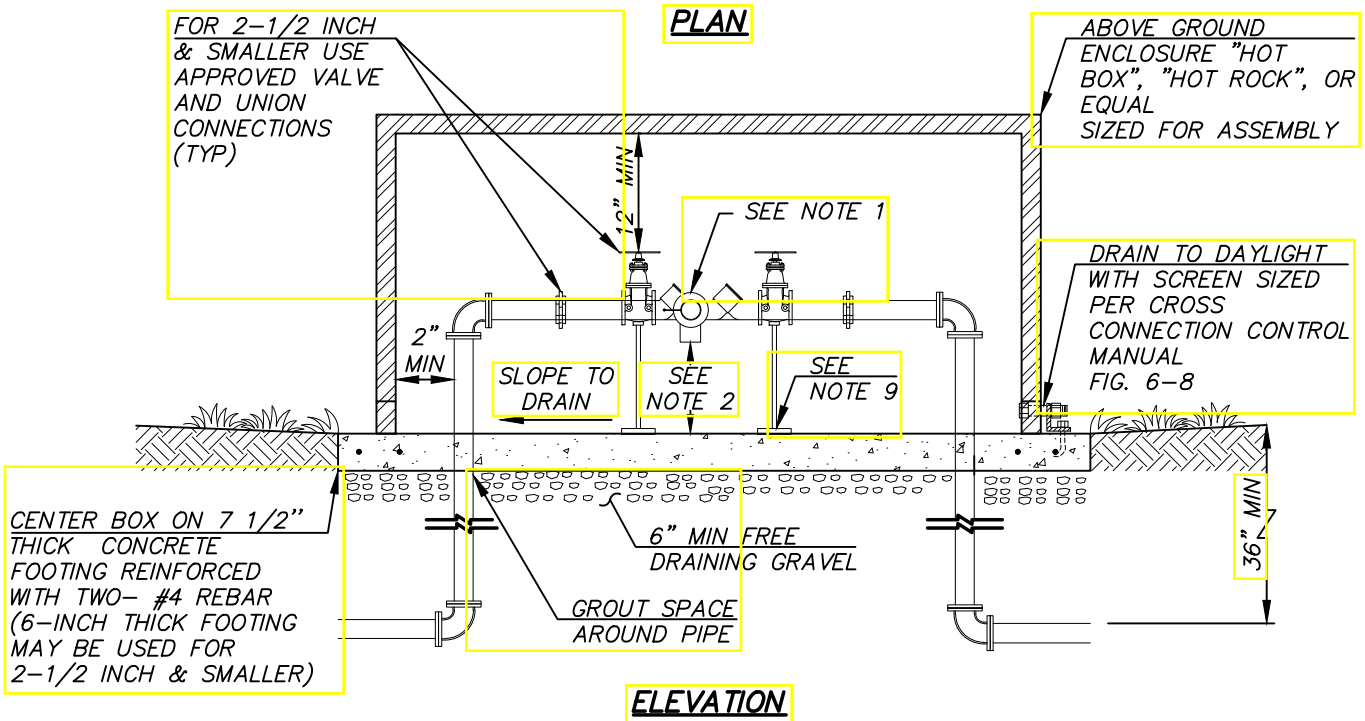

ELEVATION

RPBA INSTALLATION NOTES

1. MUST BE ON THE LATEST DEPT. OF HEALTH APPROVED LIST OF BACKFLOW PREVENTION ASSEMBLIES.
2. MUST BE INSTALLED ABOVE FINISHED GRADE, MIN. 12 INCHES TO BOTTOM OF RELIEF PORT.
3. WHEN INSTALLED INSIDE A BUILDING, A FLOOR DRAIN SIZED TO ACCEPT MAXIMUM DISCHARGE FROM THE RELIEF ASSEMBLY IS REQUIRED.
4. FREEZE PROTECTION MUST BE PROVIDED.
5. RISERS AND ALL PIPE IN BOX TO BE BRASS, COPPER, OR PVC.
6. DO NOT INSTALL IN AN AREA SUBJECT TO FLOODING. ASSEMBLIES MUST BE INSTALLED ABOVE GROUND.
7. A DISTRICT CROSS CONNECTION SPECIALIST SHALL INSPECT INSTALLATION OF DEVICE AND RECEIVE TEST REPORTS PRIOR TO ESTABLISHMENT OF WATER SERVICE OR APPROVAL. TEST REPORTS MUST BE SIGNED BY A CERTIFIED BACKFLOW ASSEMBLY TESTER AND IMMEDIATELY SENT TO THE DISTRICT.
8. SOME CLEARANCES (I.E. SIDE AND TOP) MAY NOT BE REQUIRED FOR DEVICES WITH A FULLY REMOVABLE ENCLOSURE.
9. SUPPORTS MUST BE INSTALLED FOR SIZES LARGER THAN 2-1/2".

REV. 10/19/17

REDUCED PRESSURE BACKFLOW ASSEMBLY (RPBA) INSTALLATION

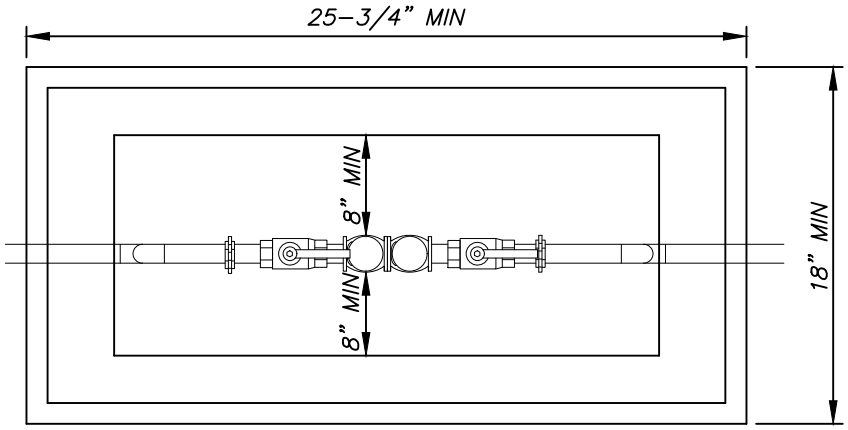

PLAN

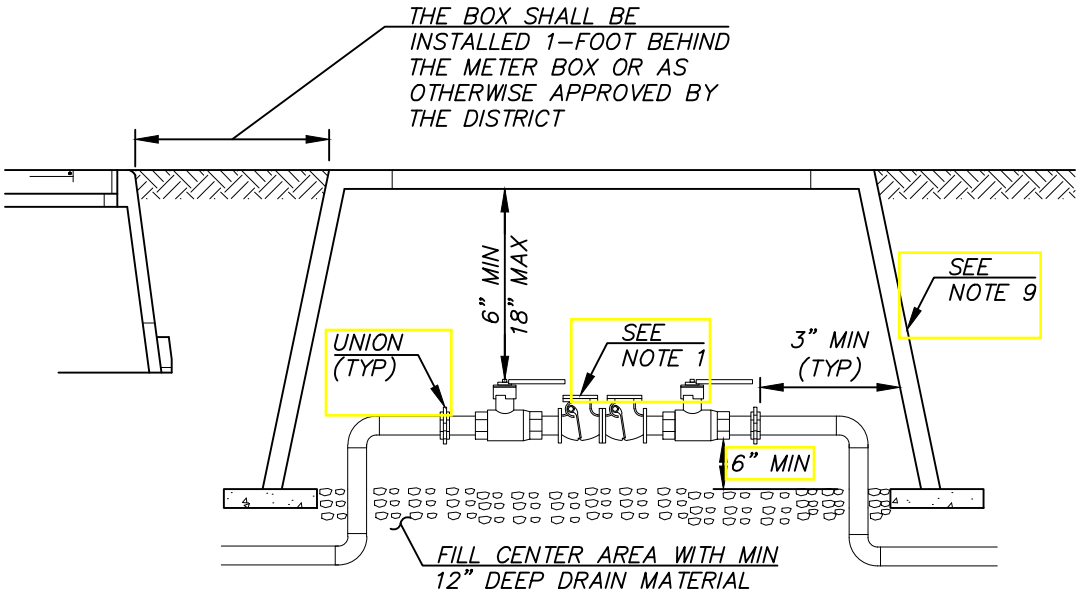

ELEVATION

DCVA INSTALLATION NOTES

1. MUST BE ON THE LATEST DEPT. OF HEALTH APPROVED LIST OF BACKFLOW PREVENTION ASSEMBLIES.
2. MAY BE INSTALLED BELOW GROUND IN AN APPROVED VAULT.
3. FREEZE PROTECTION IS THE RESPONSIBILITY OF THE OWNER.
4. RISERS AND ALL PIPE IN BOX TO BE BRASS, COPPER, OR PVC.
5. THE DCVA SHALL NOT BE INSTALLED WHERE IT MAY BECOME SUBMERGED.
6. A DISTRICT CROSS CONNECTION SPECIALIST SHALL INSPECT INSTALLATION OF DEVICE AND RECEIVE TEST REPORTS PRIOR TO ESTABLISHMENT OF WATER SERVICE OR APPROVAL. TEST REPORTS MUST BE SIGNED BY A CERTIFIED BACKFLOW ASSEMBLY TESTER AND IMMEDIATELY SENT TO THE DISTRICT.
7. FOR 2-1/2" TO 3-1/2" DCVA'S, USE A UTILITY VAULT 506-LA W/LOCKING STEEL DOOR NO. 55-332.P.
8. FOR 4" AND LARGER DCVA'S, USE A UTILITY VAULT 687-LA W/BASE 687-SB AND 2 LOCKING STEEL DOOR NO. 686-TL-2-332P.
9. FOR 1-INCH AND SMALLER DCVA USE CARSON INDUSTRIES "1220-12" OR EQUAL (21-1/2"X15") FOR 1 1/4-INCH TO 2-INCH DCVA USE CARSON INDUSTRIES "JUMBO BOX 1730-12" OR EQUAL (33-1/2"X20-1/2").

REV. 10/19/17

DOUBLE CHECK VALVE ASSEMBLY (DCVA) INSTALLATION

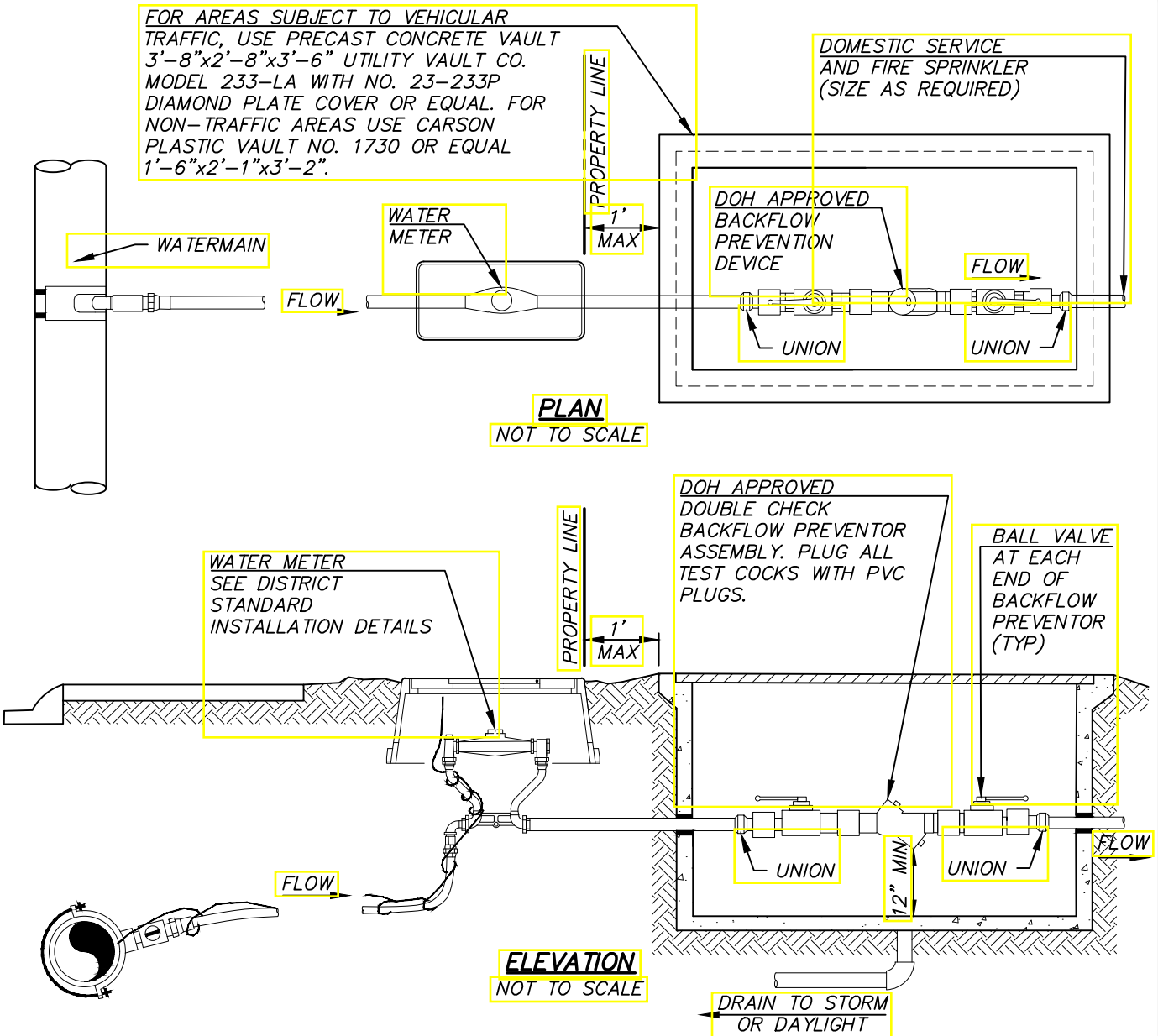

NOTE

1. NO FENCING, GATES OR OTHER OBSTACLES SHALL BE LOCATED AS TO RESTRICT ACCESS TO METER SERVICE.
2. SEE DISTRICT STANDARDS FOR WATER SERVICE METER BOX REQUIREMENTS.

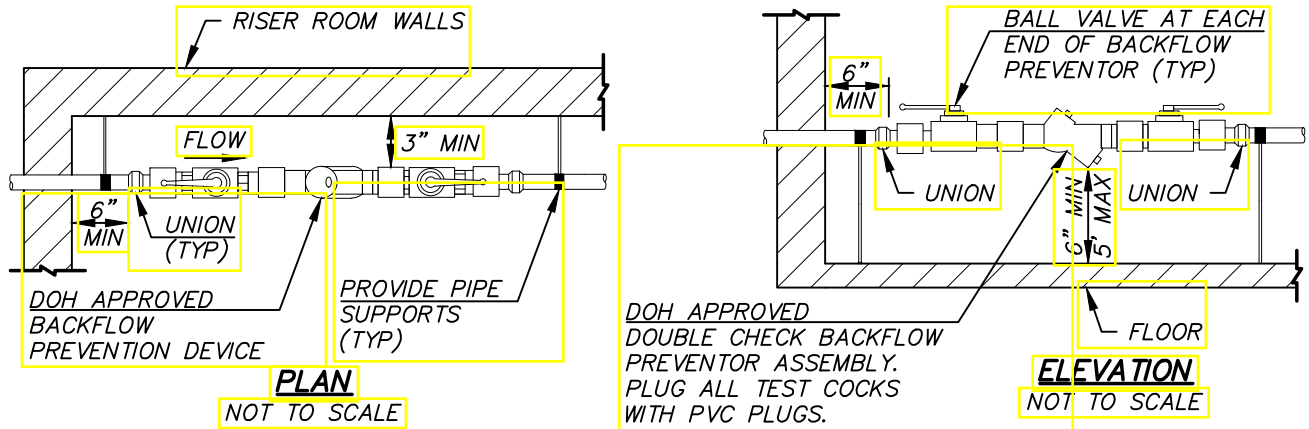

ALTERNATE/ADDITIONAL DCVA IN RISER ROOM

STANDARD FIRE SPRINKLER DCVA CONNECTION

REV. 10/19/17

GENERAL DCDA NOTES

1. ALL CONSTRUCTION SHALL CONFORM TO THE APPROPRIATE FEDERAL, STATE, COUNTY OR DISTRICT REQUIREMENTS.

2. ALL DCDAs SHALL BE APPROVED FOR INSTALLATION WITHIN THE STATE OF WASHINGTON BY THE WASHINGTON STATE DEPARTMENT OF HEALTH. THE CONTRACTOR SHALL PROVIDE THE DISTRICT WITH SPECIFICATIONS AND SHOP DRAWINGS OF THE APPROVED DCDA PRIOR TO CONSTRUCTION.

3. THE SUPPLY LINE FOR THE DCDA SHALL BE DUCTILE IRON, A MINIMUM OF 4" DIA. AND MEET THE MATERIAL AND CONSTRUCTION REQUIREMENTS OF THE DISTRICT FOR WATER MAIN CONSTRUCTION.

4. THE CONTRACTOR SHALL INSTALL AT THE WATER MAIN A TEE AND 4" MINIMUM SIZED GATE VALVE ON ALL DCDA SYSTEMS. WET TAPS ARE ONLY ALLOWED ON EXISTING WATER MAINS.

5. A FLEXIBLE FITTING (MJ SLEEVE) SHALL BE INSTALLED WHEN ENTERING THE VAULT. THIS FITTING MAY BE OMITTED IF AN MJ BELL CONNECTION IS WITHIN 5 FEET OF THE VAULT.

6. THE CONTRACTOR SHALL LEVEL THE UTILITY VAULTS AND ADJUST THE COVER TO MATCH THE EXISTING GRADE OR 6" ABOVE GRADE IN UNIMPROVED AREAS.

7. THE CONTRACTOR SHALL INSTALL A LADDER-UP AS SHOWN IN THE DETAILS. SUBMIT PRODUCT INFORMATION FOR DISTRICT REVIEW.

8. ALL VAULTS SHALL BE INSTALLED WITH A 4" ZURN FLOOR DRAIN MODEL 551 W/ GRATING ON A 4" PVC DRAIN PIPE. THE DRAIN SHALL BE RUN TO DAYLIGHT OR A STORM DRAIN SYSTEM WITH A MINIMUM OF 4" SCHEDULE 80 PVC STORM PIPE. IF POSITIVE DRAINAGE FROM THE VAULT CANNOT BE ACHIEVED A SUMP PUMP SYSTEM WILL BE REQUIRED. SUMP PUMP SHALL BE ZOELLER "MIGHTY-MATE" AUTOMATIC SUBMERSIBLE PUMP. WRITTEN DISTRICT APPROVAL IS REQUIRED FOR SUMP PUMP SYSTEM. VAULT SHALL BE CONSTRUCTED SO BACKFLOW ASSEMBLY DOES NOT BECOME SUBMERGED.

9. FIRE DEPARTMENT CONNECTIONS SHALL BE LOCATED, SIZED AND INSTALLED PER THE REQUIREMENTS OF THE FIRE MARSHAL AND AS SHOWN ON THE FIRE MARSHAL APPROVED DRAWINGS.

10. IF REQUIRED, THE POST INDICATOR VALVE IS TO BE INSTALLED AT THE LOCATION APPROVED BY THE FIRE MARSHAL AND AS SHOWN ON THE FIRE MARSHAL APPROVED DRAWINGS.

11. ALL TEST COCKS INSTALLED WITH THE DCDA SHALL HAVE THE APPROPRIATE PLUGS INSTALLED.

12. SIZING OF THE DCDA AND THE DCDA SUPPLY LINE IS THE RESPONSIBILITY OF THE PROPERTY OWNER. WHERE THE DCDA IS INSTALLED WITHIN AN UNDERGROUND VAULT AS SHOWN IN THE DETAILS, THE DISTRICT WILL MAINTAIN AND OPERATE THE SUPPLY LINE BETWEEN THE MAIN AND DCDA VAULT. THE DCDA VAULT AND ALL ITEMS AFTERWARDS ARE THE RESPONSIBILITY OF THE PROPERTY OWNER.

13. BACKFLOW ASSEMBLY TYPE AND INSTALLATION REQUIREMENTS MAY VARY AND WILL BE AT THE DISTRICT'S DISCRETION BASED UPON WASHINGTON STATE DEPARTMENT OF HEALTH DRINKING WATER REGULATIONS RELATING TO CROSS CONNECTION WAC 246-290-010. THE DISTRICT REQUIREMENTS MAY BE EQUAL TO OR MORE STRINGENT THAN THE ABOVE CITED CODE.

PAINT SCHEDULE

EXTERIOR OF VAULT BELOW GRADE TWO COATS OF BLACK BITUMASTIC SOLUTION VAULT SHOULD BE DRIED WITH NO MOISTURE PRESENT PRIOR TO APPLICATION OF COATINGS.

PAINT INTERIOR PIPING AND VALVES ONLY, BACKFLOW ASSEMBLY SHALL NOT BE PAINTED.

1 - COAT RUST RESISTOR PRIMER RED #1013
2 - COATS SAFETY BLUE

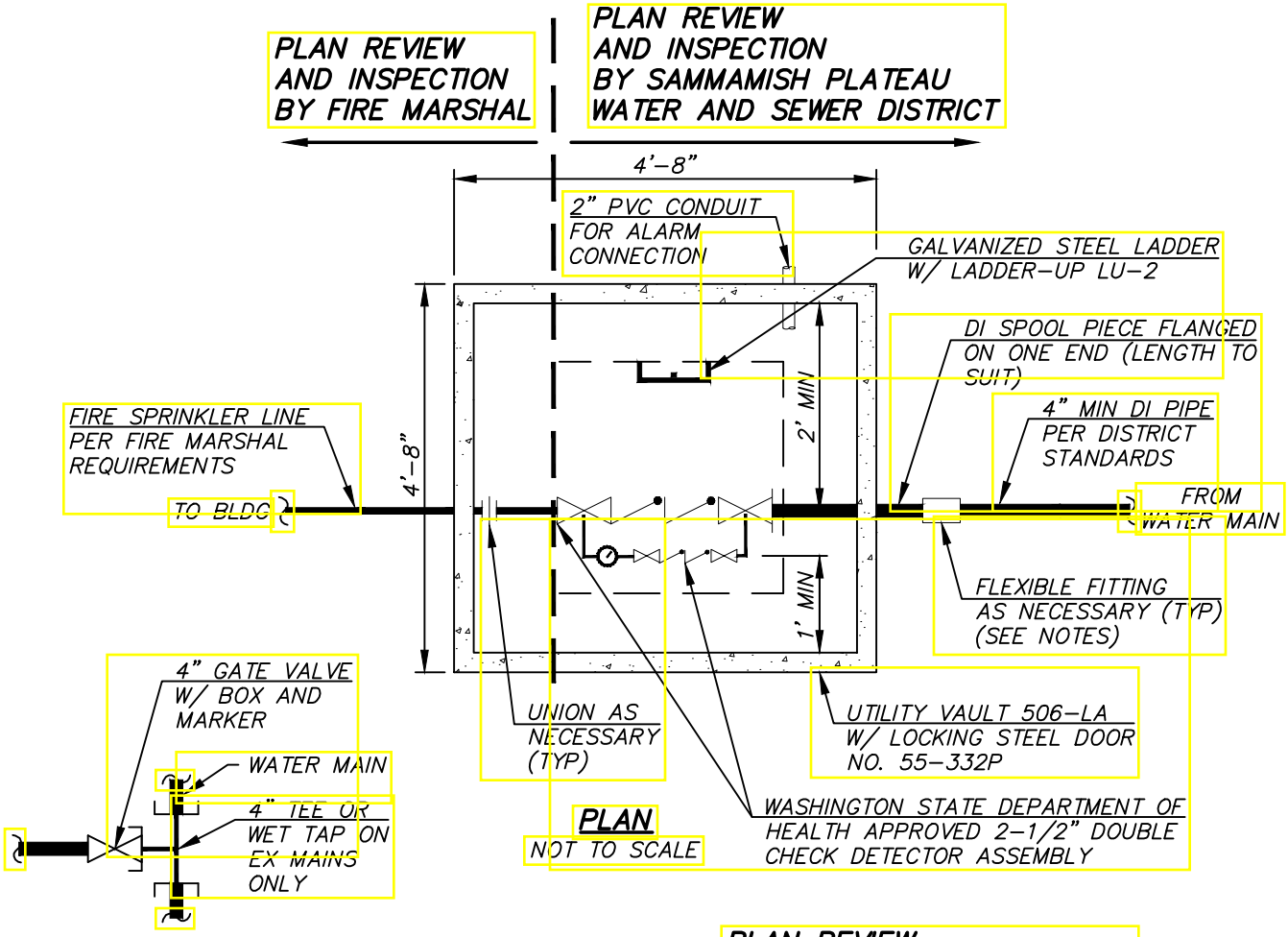

CONNECTION TO MAIN
NOT TO SCALE

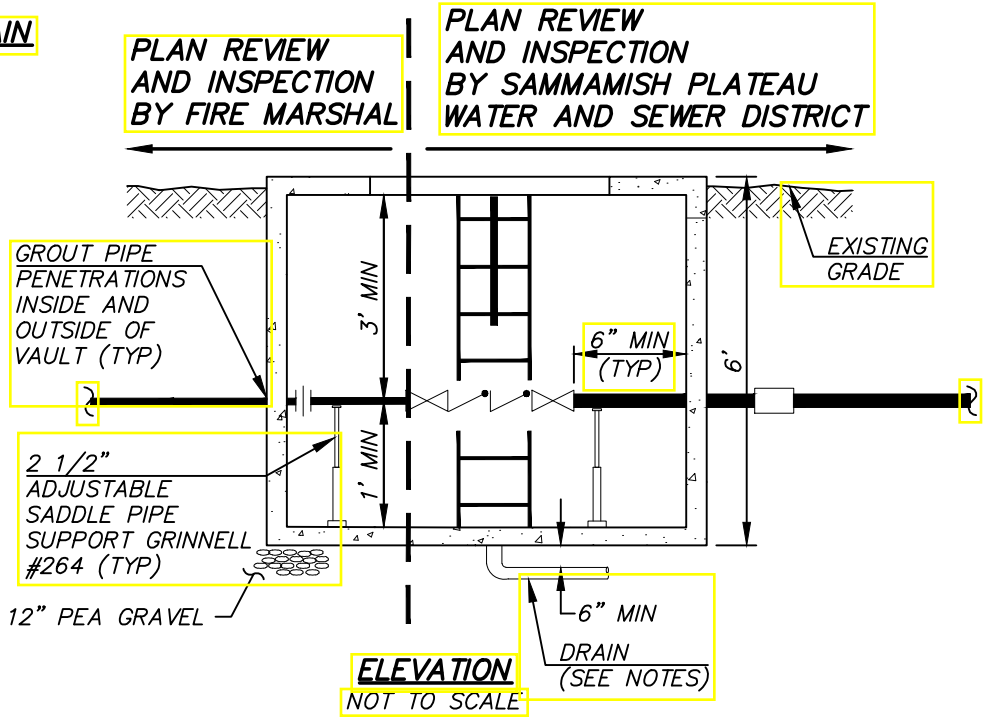

ELEVATION
NOT TO SCALE

NOTE

1. FOR LOCATION OF FIRE DEPARTMENT CONNECTION (FDC) AND POST INDICATOR VALVE (PIV), IF APPLICABLE, SEE FIRE MARSHAL APPROVED DRAWINGS.
2. DISTRICT OPERATIONS AND MAINTENANCE RESPONSIBILITY OF THE WATERMAIN ENDS AT THE FACE OF THE VAULT

2-1/2" DOUBLE CHECK DETECTOR ASSEMBLY

REV. 10/19/17

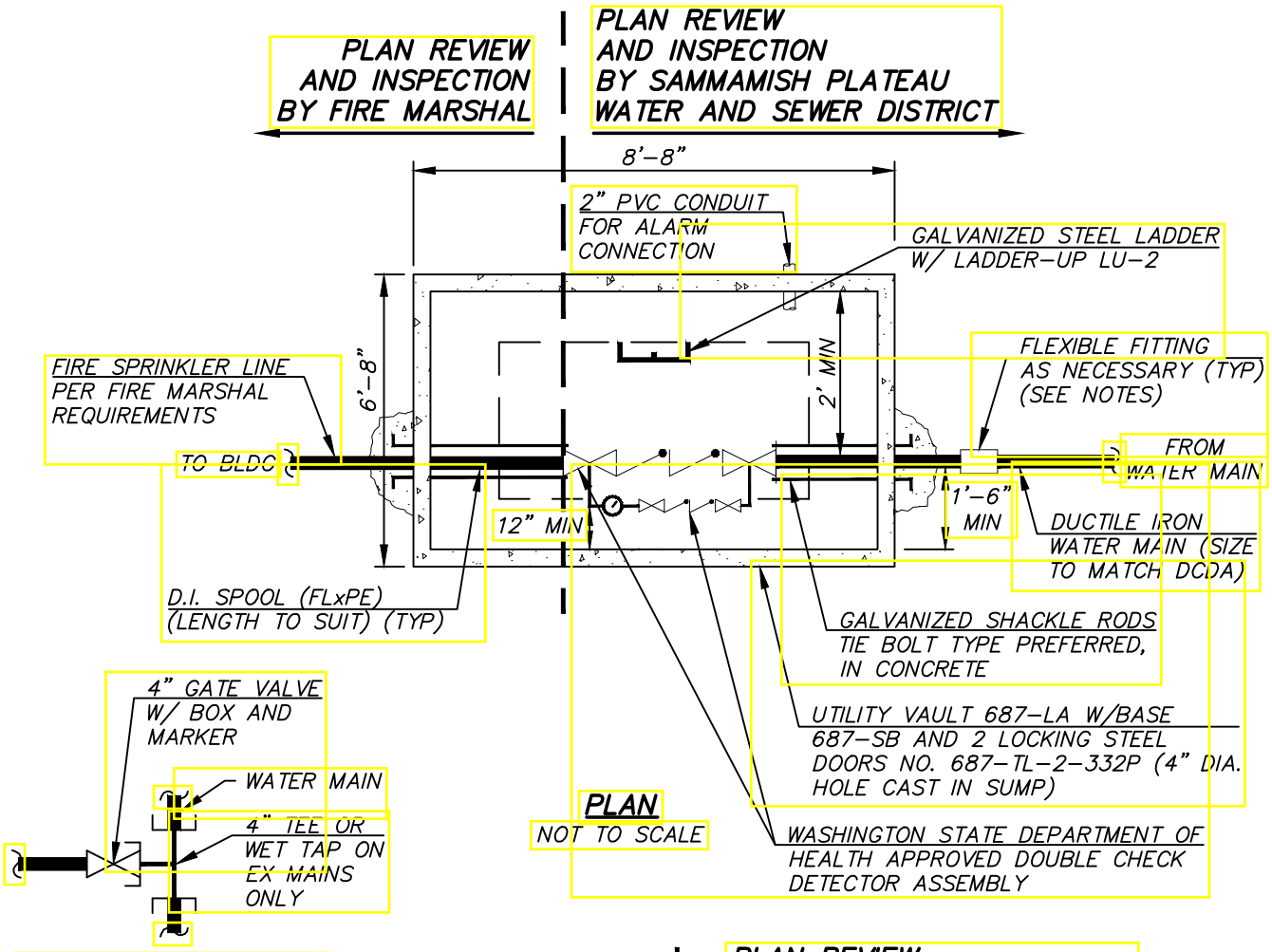

CONNECTION TO MAIN
NOT TO SCALE

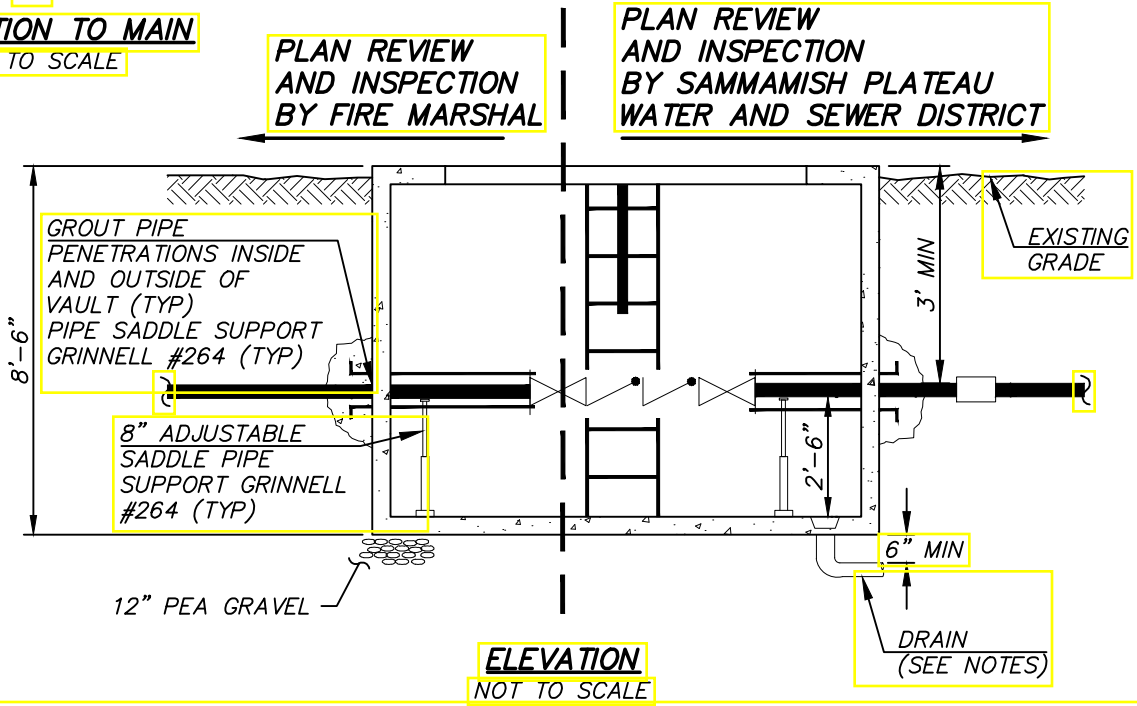

ELEVATION
NOT TO SCALE

NOTE

1. FOR LOCATION OF FIRE DEPARTMENT CONNECTION (FDC) AND POST INDICATOR VALVE (PIV), IF APPLICABLE, SEE FIRE MARSHAL APPROVED DRAWINGS.
2. DISTRICT OPERATIONS AND MAINTENANCE RESPONSIBILITY OF THE WATERMAIN ENDS AT THE FACE OF THE VAULT.

This page intentionally left blank.

Appendix M

Hydraulic Model Development and Calibration

This page intentionally left blank.

MSA
Murray, Smith & Associates, Inc.
Engineers/Planners
601 Union Street, Suite 622 ■ Seattle, WA 98101 ■ PHONE 206.462.7030 ■ FAX 866.274.9807

FINAL TECHNICAL MEMORANDUM

DATE: December 14, 2016

PROJECT: 16-1773

TO: Sammamish Plateau Water

FROM: Murray, Smith & Associates, Inc.

RE: Hydraulic Model Development & Calibration

DAVID E. STANGEL
STATE OF WASHINGTON
39919
REGISTERED
PROFESSIONAL ENGINEER
12/14/16

Overview

This document summarizes the procedures, assumptions, and key findings of the Sammamish Plateau Water (SPW) hydraulic model update and calibration. SPW had developed H2OMap hydraulic models for the Plateau Zone and Cascade View Zone areas of the system. Since that time, there have been new developments and capital improvement projects, and the utility now has better GIS and customer water use information; the updated model incorporates the new information and represents the current state of the network.

Hydraulic Model Update

This project began by reviewing the current GIS database for topology accuracy. Modifications were made in the GIS database to allow for a one to one comparison of elements (excluding facilities) between the data sources. Once these initial QA/QC iterations were completed the water system GIS was imported to InfoWater (by Innovyze). The existing facility inventory was added to the model while keeping the pipe alignment as close to the GIS as possible. PRV stations were modeled to include bypass and main, true to the field configuration. Wells and pump stations were modeled consistently with the previous H2OMap model. The updated model is a comprehensive representation of the entire system's piping and infrastructure with a consistent level of detail. It includes 300 miles of pipe, 8 storage tanks, 7 booster stations, 10 pump stations, 3 interties, and 10 wells.

The model updating process was based on the following sources of information:

- Current GIS database inventory
- Updated pump curves
- Well production
- Customer consumption data, from billing records

Naming Convention

Pipes were identified by the SPW ID that began with "WM" followed by six numerical digits, ranging from 000002 to 094100 (consistent with the GIS and asset management database). Wells, tanks, and pump stations were delineated and identified by their name in the Hydraulic Grade Line (HGL) Profile and as identified by previous master planning and modeling efforts. Pressure Reducing Valves (PRVs) were identified according to their number and designation as either "Main" or "Bypass." These IDs were also provided by SPW. Pressure zones were based on previous work and validated with updated information from the GIS as a shapefile and attributed to the pipe and node tables. There are a total of 30 pressure zones between the two services areas, Cascade View and Plateau Zone. The Plateau Zone is the larger of the two, with a total of 25 pressure zones, while the Cascade View Zone covers a total of five pressure zones.

Existing Average Day Demands

Existing system demands were developed from customer meter information and linked to parcels through a common identification number. Monthly meter information for 2015 was used to develop average daily demand (ADD) for each parcel. Parcels were assigned to the closest model junction within the corresponding pressure zone. Water production records were used to scale (i.e., peak) the billed demand up to account for water losses and unaccounted-for water and to, ultimately, meet overall production. **Table 1** presents the allocated average day demands by pressure zone.

Table 1
Existing Average Day Demand, by Pressure Zone

Service Area	Pressure Zone(s)	In Model	Total Demand (gpm)
Cascade View Zone	642	642	1
Cascade View Zone	730	730, 730 CV	115
Cascade View Zone	550 CV	550 CV	19
Cascade View Zone	590 CV	590 CV	6
Cascade View Zone	650 CV	650 CV	6
		Total	**147**
Service Area	**Pressure Zone(s)**	**In Model**	**Total Demand (gpm)**
Plateau Zone	297	297	284
Plateau Zone	300	300	0
Plateau Zone	310	310	1
Plateau Zone	375	375	11
Plateau Zone	390	390	15
Plateau Zone	400 BROD	400	12
Plateau Zone	400 WAV	400	13
Plateau Zone	450	450	7
Plateau Zone	450 WAK	450	67
Plateau Zone	466	466	7
Plateau Zone	475	475	93
Plateau Zone	475 PH	475	3
Plateau Zone	475 SAMSUN	475	11
Plateau Zone	499	499	6
Plateau Zone	510	510	1
Plateau Zone	540	540	16
Plateau Zone	550	550	258
Plateau Zone	550 ALD	550	66
Plateau Zone	566	566	8
Plateau Zone	590	590	59
Plateau Zone	650	650	2,406
Plateau Zone	700	700	172
Plateau Zone	700 BC	700	1
Plateau Zone	700 SH	700	0
		Total	**3,517**

Model Calibration & Validation

The updated hydraulic model was calibrated by comparing model results to field data, obtained from field tests carried out in June, July, and October 2016. A total of 45 locations were selected to perform field tests. The locations were selected to measure all pressure zones and were spatially distributed to cover the service areas. In all zones that were of medium to large size at least two tests were conducted. The test locations are presented in **Figure 1**. Field tests were not carried out in a few of the smaller pressure zones due to either the lack of hydrants or their specific location, including 400 OV, 475 PH, 566, 700 OV, and 700 BC.

A field test consisted of measuring the static pressure, time, and date at a pressure hydrant followed by opening of a nearby hydrant (i.e., flow hydrant) to generate a pressure drop of at least 10 psi, and collect flow and residual pressure information. Calibration information also included pump status, supply from/to interconnections, and reservoir levels at the time of each test. These parameters were obtained from SCADA. Further, the total production for each testing day was used to adjust the overall model demand.

Simulated results were compared with field data to see how well the model reproduced real world conditions. PRV settings were adjusted to match field test data.

The calibration process used in this planning effort enables the model to be used for planning level evaluations and as an aid during design. The model was calibrated for steady state conditions.

SAMMAMISH PLATEAU WATER

2016 FIELD TEST LOCATIONS

Booster Pump Station
Tank
Well
PRV
Intertie
Water Main

Field Test Hydrants*
Pressure
Flow (#1)
Flow (#2)

Service Area
Cascade View
Plateau
Parcel
Water Body

N W E S

0 1,750 3,500 Feet

*Note: Call-outs represent field test locations by Test No.

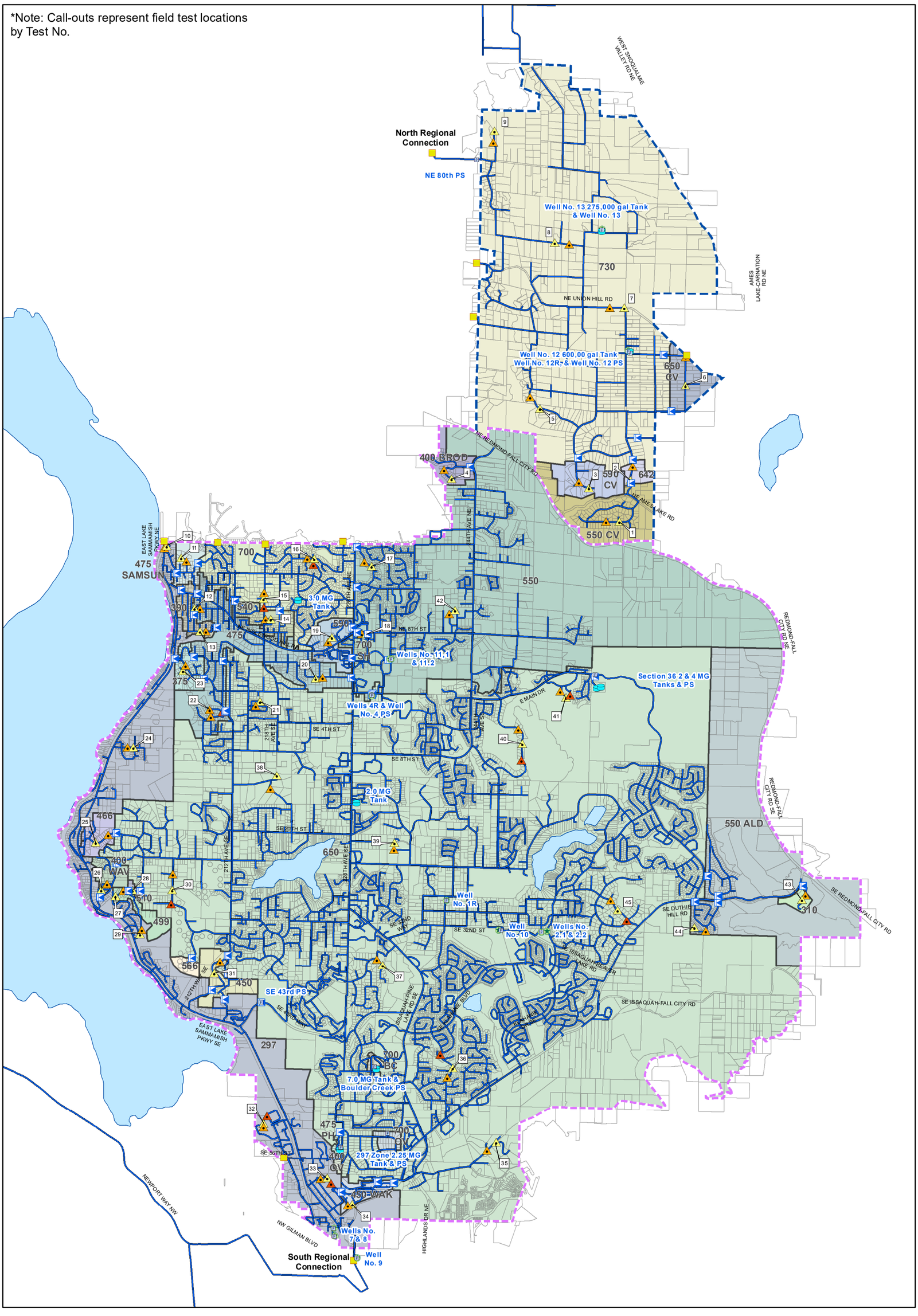

Calibration & Validation Results

Table 2 shows the calibration results for the field tests versus the model results and is organized by pressure zone. **Table 3** shows the overall level of calibration confidence of each pressure zone. A level of confidence for each location was assigned based on the absolute and proportional error of both static and residual results:

- "High" – static error less than 5 percent or 7 psi and residual error less than 10 percent or 10 psi
- "Medium" – static error less than 10 percent or 10 psi and residual error less than 15 percent or 15 psi, and
- "Low" – static and residual errors exceeding the "Medium" ranges

Figure 2 presents the results of the calibration, in terms of both pressure difference and percent difference. The primary conclusions drawn from the calibration include:

- The model presented a High level of accuracy for static pressure at all 45 testing locations.
- The model presented a High level of accuracy for residual pressure at 42 of the 45 testing locations.
- All 25 of the pressure zones tested are considered calibrated to a High level of overall accuracy with respect to static pressures. 22 pressure zones, of the 25 tested, meet a High level of overall accuracy with respect to residual pressures.
- Three pressure zones meet a Medium level of overall accuracy with respect to residual pressures.
- The overall calibration indicates that 24 of the 25 pressure zones possess a High overall accuracy and only one zone, Plateau Zone 475, is identified as a Medium overall accuracy.

Test No. 12 is an area that requires additional investigation as the two other tests (Test No. 20, Test No. 22) in the same pressure zone (Plateau Zone 475, Inglewood Hill), returned High levels of calibration confidence for both static and residual calibration. In response, both the flow testing was repeated and a validation of pipe connectivity and diameter was completed by SPW for this location; however, results similar to the original ones were confirmed. The causes of this could be a closed or partially closed valve between the test locations in Plateau Zone 475 or an incorrect PRV setting. It is recommended that additional testing be carried out, after current water main project construction in this area has been completed, to determine the reason of the low residual pressure in this area.

This page intentionally left blank.

Table 2
Summary of Calibration Results – Absolute & Percent Error for Field v. Model Results

Test ID	Service Area	Pressure Zone	Static Pressure (psi), Field	Static Pressure (psi), Model	Static Error (psi)	Static Pressure Confidence	Static Percent Error (%)	Static Percent Confidence	Residual Pressure (psi), Field	Residual Pressure (psi), Model	Residual Error (psi)	Residual Pressure Confidence	Residual Percent Error (%)	Residual Percent Confidence
2	Cascade View Zone	642	93	100	7	High	7%	Medium	93	90	-3	High	-3%	High
5	Cascade View Zone	730	108	110	2	High	2%	High	92	86	-6	High	-7%	High
7	Cascade View Zone	730	50	54	4	High	8%	Medium	40	43	3	High	7%	High
8	Cascade View Zone	730	53	53	0	High	0%	High	43	47	4	High	9%	High
9	Cascade View Zone	730	71	71	0	High	0%	High	42	42	0	High	0%	High
1	Cascade View Zone	550 CV	50	50	0	High	1%	High	32	34	2	High	6%	High
3	Cascade View Zone	590 CV	100	97	-3	High	-3%	High	75	81	6	High	7%	High
6	Cascade View Zone	650 CV	96	96	0	High	1%	High	86	91	5	High	6%	High
10	Plateau Zone	Inglewood Hill, 297	80	76	-4	High	-5%	High	42	48	6	High	15%	Medium
24	Plateau Zone	Inglewood Hill, 297	80	74	-6	High	-8%	Medium	48	49	1	High	1%	High
29	Plateau Zone	SW Lake Sammamish, 297	84	80	-4	High	-5%	High	60	70	10	Medium	17%	Low
32	Plateau Zone	Freegard, 297	102	104	2	High	2%	High	88	97	9	High	10%	High
33	Plateau Zone	Freegard, 297	89	82	-7	High	-8%	Medium	83	80	-3	High	-3%	High
43	Plateau Zone	South Plateau, 310	74	71	-3	High	-5%	High	59	68	9	High	15%	Medium
23	Plateau Zone	Inglewood Hill, 375	112	106	-6	High	-6%	High	96	93	-3	High	-3%	High
13	Plateau Zone	Inglewood Hill, 390	60	58	-2	High	-3%	High	40	42	2	High	5%	High
31	Plateau Zone	SW Lake Sammamish, 450	80	83	3	High	3%	High	65	71	6	High	10%	High
25	Plateau Zone	Inglewood Hill, 466	68	71	3	High	4%	High	57	63	6	High	11%	Medium
12	Plateau Zone	Inglewood Hill, 475	78	71	-7	High	-8%	Medium	32	48	16	Low	49%	Low
20	Plateau Zone	Inglewood Hill, 475	56	52	-4	High	-7%	High	40	46	6	High	16%	Low
22	Plateau Zone	Inglewood Hill, 475	63	60	-3	High	-4%	High	53	52	-1	High	-2%	High
27	Plateau Zone	SW Lake Sammamish, 499	89	91	2	High	3%	High	69	63	-6	High	-8%	High
28	Plateau Zone	SW Lake Sammamish, 510	66	66	0	High	0%	High	0	0		High		High
14	Plateau Zone	Inglewood Hill, 540	72	75	3	High	4%	High	50	59	9	High	18%	Low
17	Plateau Zone	North Plateau, 550	38	44	6	High	16%	Low	32	41	9	High	29%	Low
42	Plateau Zone	North Plateau, 550	60	57	-3	High	-5%	High	52	55	3	High	6%	High
19	Plateau Zone	Inglewood Hill, 590	90	87	-3	High	-3%	High	75	84	9	High	12%	Medium
21	Plateau Zone	Inglewood Hill, 650	62	64	2	High	4%	High	52	51	-1	High	-1%	High
30	Plateau Zone	SW Lake Sammamish, 650	110	108	-2	High	-2%	High	96	96	0	High	0%	High
35	Plateau Zone	Freegard, 650	103	108	5	High	5%	High	93	88	-5	High	-5%	High
36	Plateau Zone	South Plateau, 650	96	91	-5	High	-5%	High	86	88	2	High	2%	High

Test ID	Service Area	Pressure Zone	Static Pressure (psi), Field	Static Pressure (psi), Model	Static Error (psi)	Static Pressure Confidence	Static Percent Error (%)	Static Percent Confidence	Residual Pressure (psi), Field	Residual Pressure (psi), Model	Residual Error (psi)	Residual Pressure Confidence	Residual Percent Error (%)	Residual Percent Confidence
37	Plateau Zone	South Plateau, 650	125	122	-3	High	-3%	High	105	114	9	High	9%	High
38	Plateau Zone	Inglewood Hill, 650	117	120	3	High	3%	High	105	102	-3	High	-3%	High
39	Plateau Zone	North Plateau, 650	113	116	3	High	3%	High	97	100	3	High	3%	High
40	Plateau Zone	North Plateau, 650	70	72	2	High	2%	High	54	47	-7	High	-13%	Medium
41	Plateau Zone	North Plateau, 650	49	49	0	High	1%	High	39	29	-10	Medium	-26%	Low
45	Plateau Zone	South Plateau, 650	97	96	-1	High	-1%	High	87	84	-4	High	-4%	High
15	Plateau Zone	Inglewood Hill, 700	99	105	6	High	6%	High	89	96	7	High	7%	High
16	Plateau Zone	Inglewood Hill, 700	70	70	0	High	0%	High	60	63	3	High	4%	High
4	Plateau Zone	North Plateau, 400 BROD	25	25	0	High	-1%	High	0	0	0	High	0%	High
26	Plateau Zone	SW Lake Sammamish, 400 WAV	102	103	1	High	1%	High	88	95	7	High	8%	High
34	Plateau Zone	Freegard, 450 WAK	118	115	-3	High	-2%	High	104	109	5	High	5%	High
11	Plateau Zone	Inglewood Hill, 475 SAMSUN	92	94	2	High	3%	High	56	65	9	High	16%	Low
44	Plateau Zone	South Plateau, 550 ALD	57	57	0	High	0%	High	41	50	9	High	22%	Low
18	Plateau Zone	North Plateau, 700 SH	145	150	5	High	4%	High	0	0	0	High	0%	High

Table 3
Summary of Calibration Results – Pressure Zone Overview

Service Area	Pressure Zone	Static Error (psi)	Static Error (%)	Overall Static Confidence	Residual Error (psi)	Residual Error (%)	Overall Residual Confidence	Overall Pressure Zone Confidence
Cascade View Zone	642	6.8	7.3%	High	-2.6	-2.8%	High	High
Cascade View Zone	730	1.4	2.4%	High	0.1	2.4%	High	High
Cascade View Zone	550 CV	0.4	0.9%	High	2.0	6.1%	High	High
Cascade View Zone	590 CV	-3.1	-3.1%	High	5.6	7.4%	High	High
Cascade View Zone	650 CV	0.5	0.5%	High	4.9	5.7%	High	High
Plateau Zone	297	-3.8	-4.7%	High	4.6	8.0%	High	High
Plateau Zone	310	-3.4	-4.6%	High	8.8	15.0%	High	High
Plateau Zone	375	-6.4	-5.7%	High	-3.0	-3.1%	High	High
Plateau Zone	390	-1.8	-2.9%	High	2.0	5.0%	High	High
Plateau Zone	450	2.7	3.4%	High	6.4	9.8%	High	High
Plateau Zone	466	2.6	3.8%	High	6.4	11.2%	High	High
Plateau Zone	475	-4.4	-6.5%	High	7.0	20.9%	High	Medium*
Plateau Zone	499	2.3	2.6%	High	-5.6	-8.1%	High	High
Plateau Zone	510	0.1	0.2%	High	0.0	0.0%	High	High
Plateau Zone	540	3.1	4.4%	High	9.2	18.3%	Medium	High
Plateau Zone	550	1.6	5.5%	High	6.1	17.2%	High	High
Plateau Zone	*566*	*N/A*	*N/A*	*N/A*	*N/A*	*N/A*	*N/A*	*N/A*
Plateau Zone	590	-2.6	-2.9%	High	9.3	12.4%	Medium	High
Plateau Zone	650	0.5	0.7%	High	-1.4	-3.7%	High	High
Plateau Zone	700	2.6	2.6%	High	4.6	5.9%	High	High
Plateau Zone	400 BROD	-0.2	-0.8%	High	0.0	0.0%	High	High
Plateau Zone	*400 OV*	*N/A*	*N/A*	*N/A*	*N/A*	*N/A*	*N/A*	*N/A*
Plateau Zone	400 WAV	1.1	1.1%	High	7.0	7.9%	High	High
Plateau Zone	450 WAK	-2.9	-2.4%	High	4.9	4.8%	High	High
Plateau Zone	*475 PH*	*N/A*	*N/A*	*N/A*	*N/A*	*N/A*	*N/A*	*N/A*
Plateau Zone	475 SAMSUN	2.3	2.5%	High	9.2	16.4%	Medium	High
Plateau Zone	550 ALD	0.0	0.0%	High	8.8	21.5%	High	High
Plateau Zone	*700 BC*	*N/A*	*N/A*	*N/A*	*N/A*	*N/A*	*N/A*	*N/A*
Plateau Zone	*700 OV*	*N/A*	*N/A*	*N/A*	*N/A*	*N/A*	*N/A*	*N/A*
Plateau Zone	700 SH	5.3	3.7%	High	0.0	0.0%	High	High

**General Note: Pressure Zone 475 has an overall confidence of "Medium" due to inconsistencies with Test No. 12 within the Inglewood Hill zone.*

SAMMAMISH PLATEAU WATER

2016 CALIBRATION CONFIDENCE

Booster Pump Station
Tank
Well
PRV
Intertie
Water Main

Service Area
Cascade View
Plateau
Parcel
Water Body

Confidence (Percent Error)**
High Static, High Residual
High Static, Medium Residual
High Static, Low Residual
Medium Static, High Residual
Medium Static, Medium Residual
Medium Static, Low Residual
Low Static, Low Residual

Confidence (Absolute Pressure)**
High Static, High Residual
High Static, Medium Residual
High Static, Low Residual

Overall Pressure Zone Confidence
High Confidence
Medium Confidence
Not Tested

N W E S

0 1,750 3,500 Feet

*Note: Call-outs represent field test locations by Test No.
**Note: Confidence results indicate static and residual scenario errors for Confidence Levels:
High (<5% or 7 psi Static; <10% or 10 psi Residual)
Medium (<10% or 10 psi Static; <15% or 15 psi Residual)
Low (errors exceeding Medium ranges)

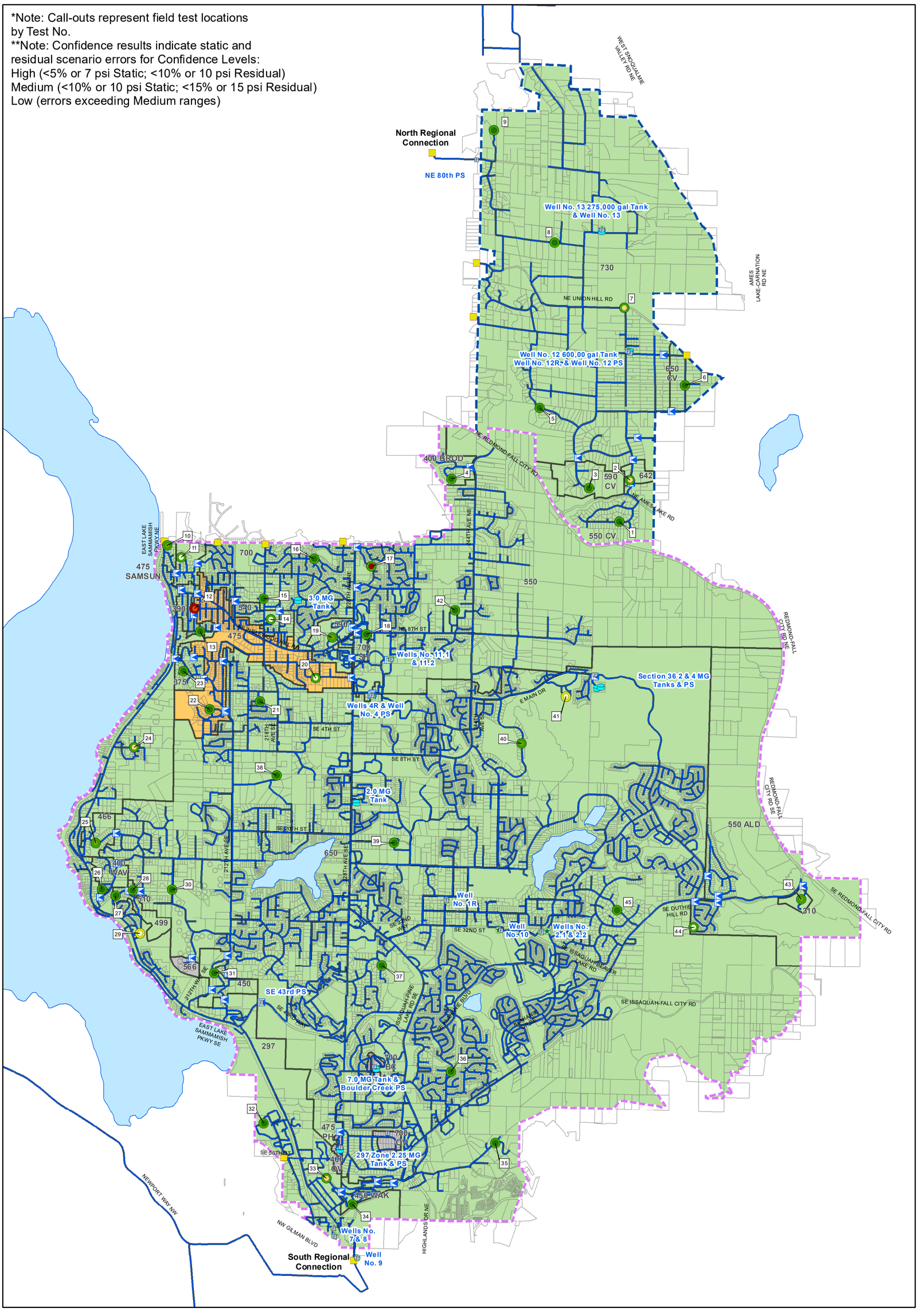

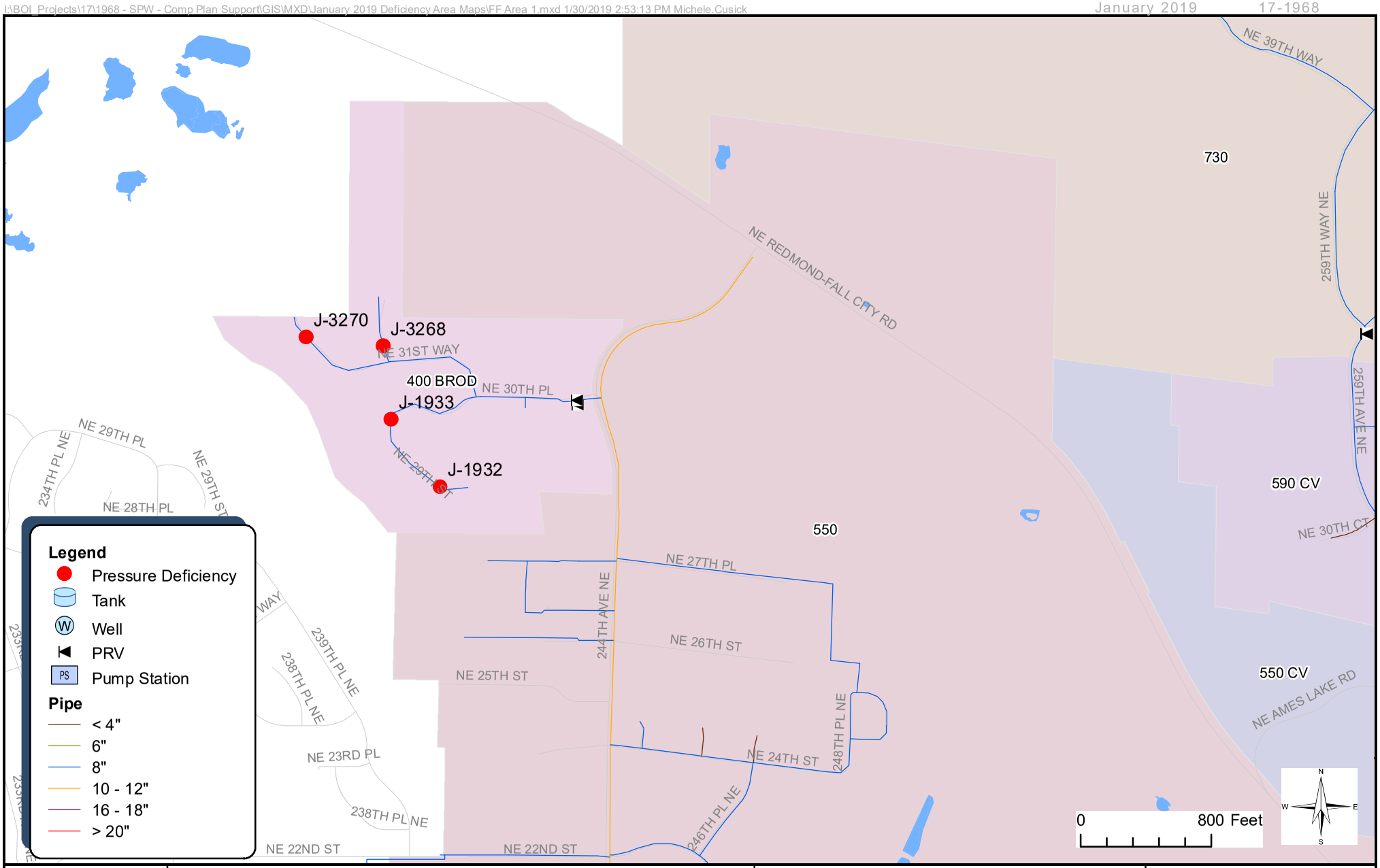

murraysmith

Sammamish Plateau Water
2037 FF Deficiencies

Figure 1
FF Area 1

Sammamish Plateau Water

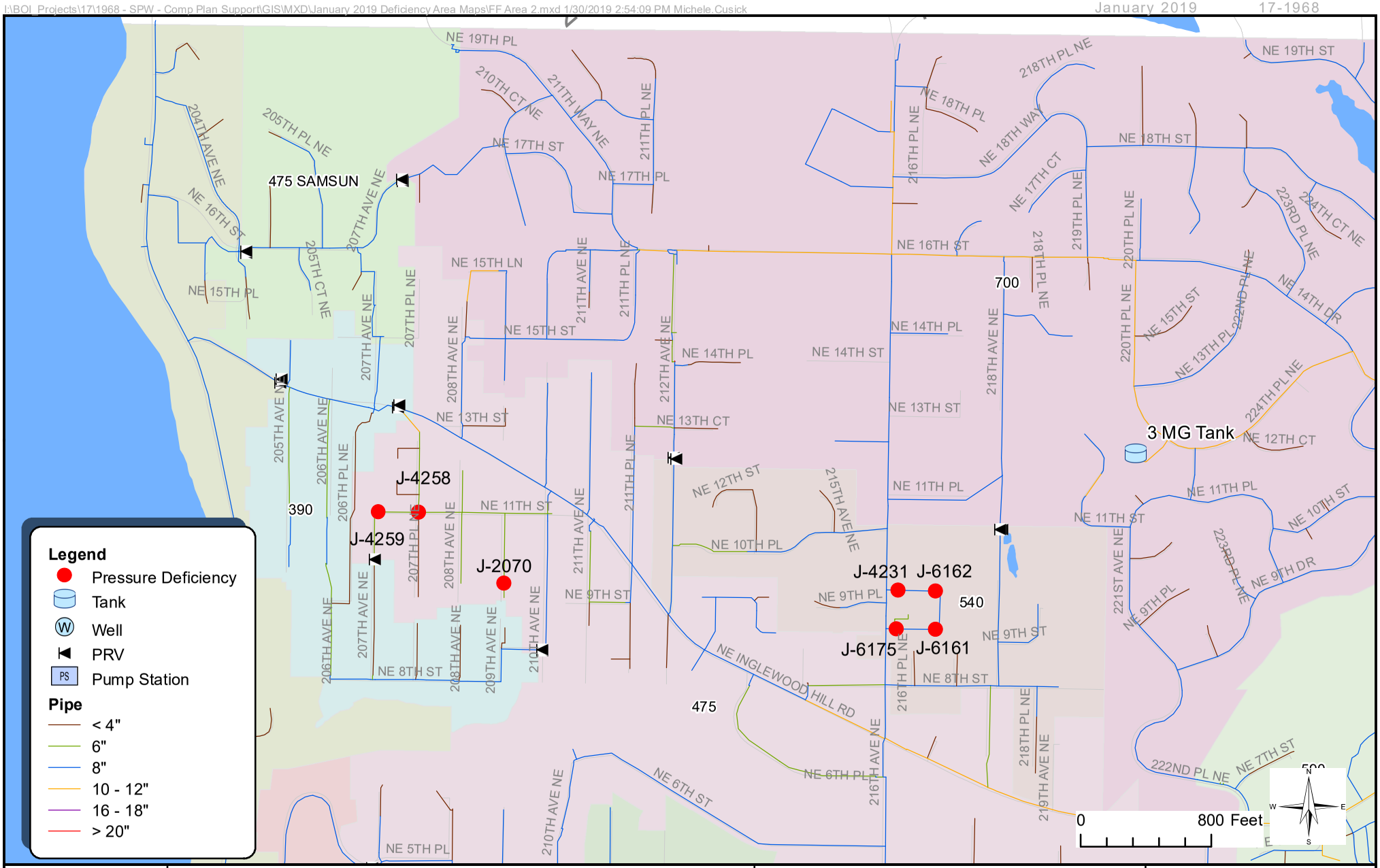

murraysmith

Sammamish Plateau Water
2037 FF Deficiencies

Figure 2
FF Area 2 & 3

Sammamish Plateau Water

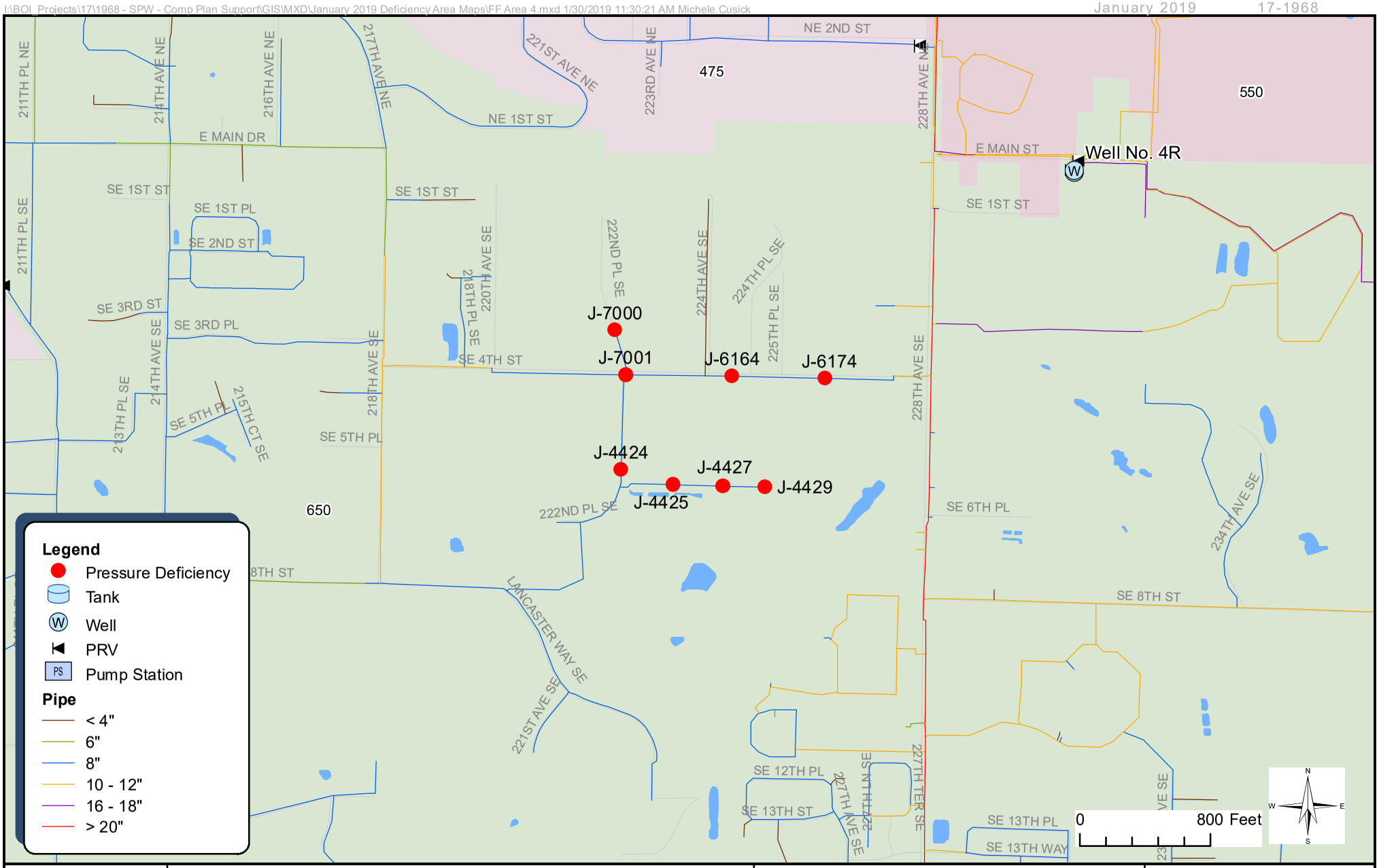

murraysmith

Sammamish Plateau Water
2037 FF Deficiencies

Figure 3
FF Area 4

Sammamish Plateau Water

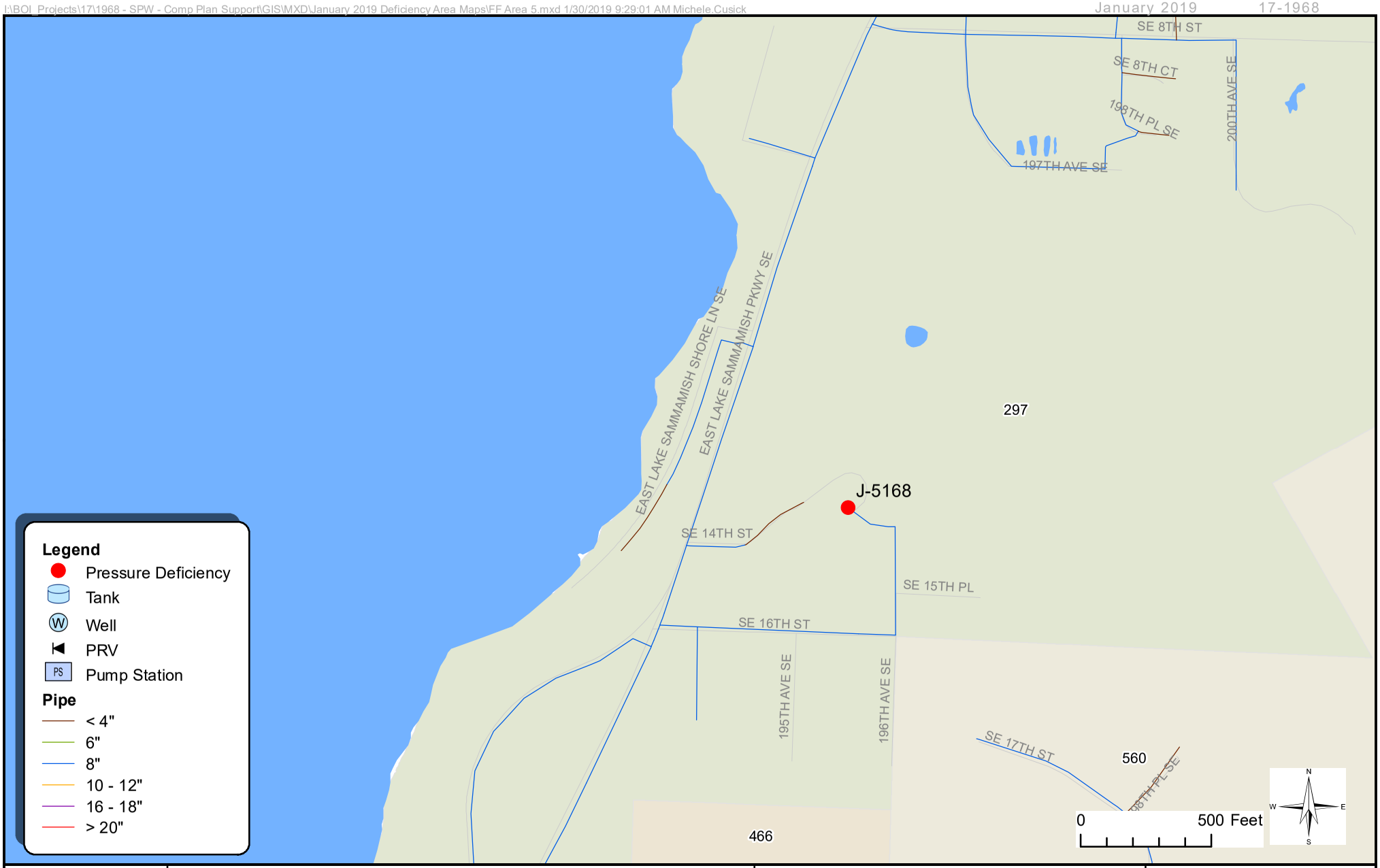

murraysmith

Sammamish Plateau Water
2037 FF Deficiencies

Figure 4
FF Area 5

Sammamish Plateau Water

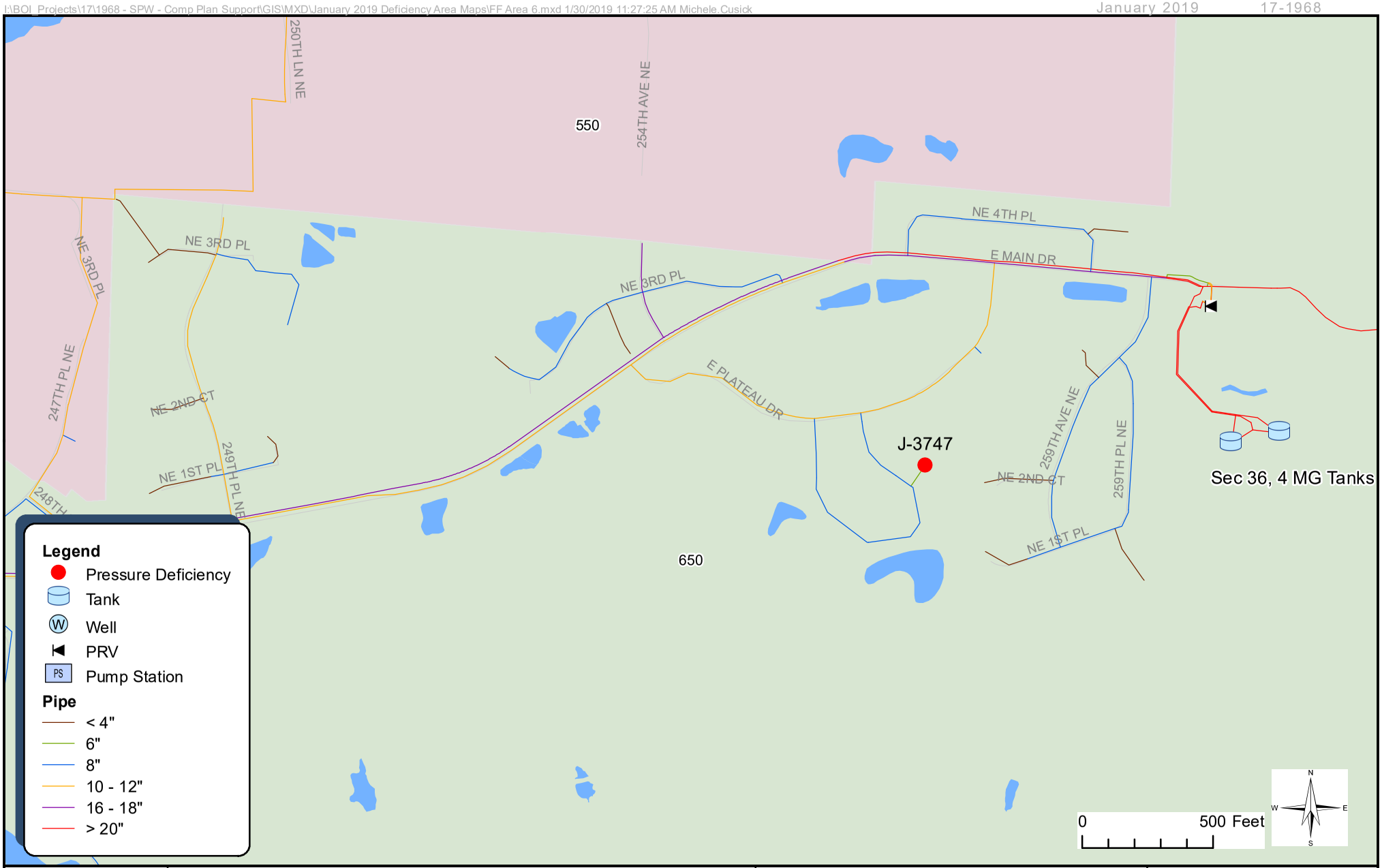

murraysmith

Sammamish Plateau Water
2037 FF Deficiencies

Figure 5
FF Area 6

Sammamish Plateau Water

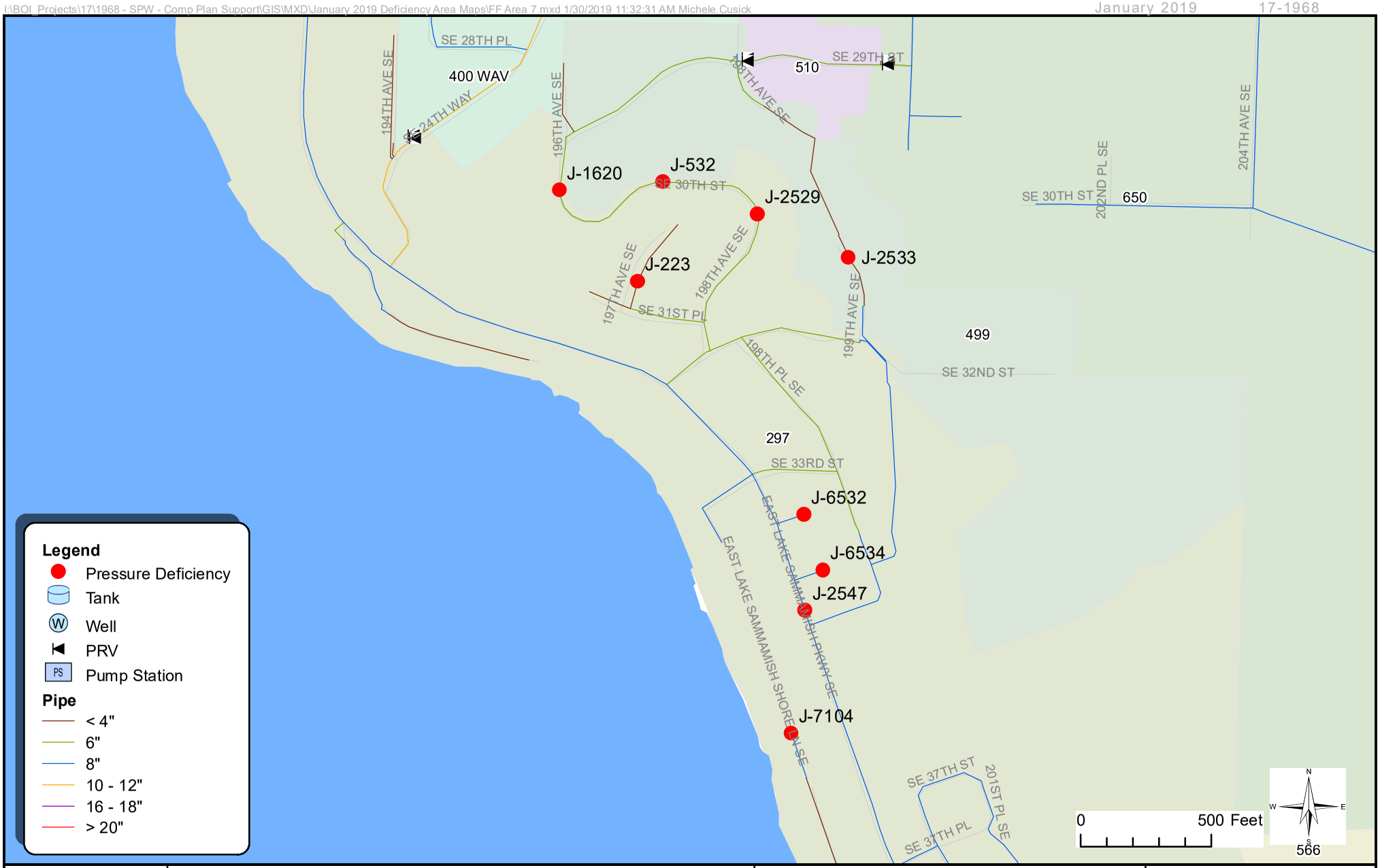

murraysmith

Sammamish Plateau Water
2037 FF Deficiencies

Figure 6
FF Area 7

Sammamish Plateau Water

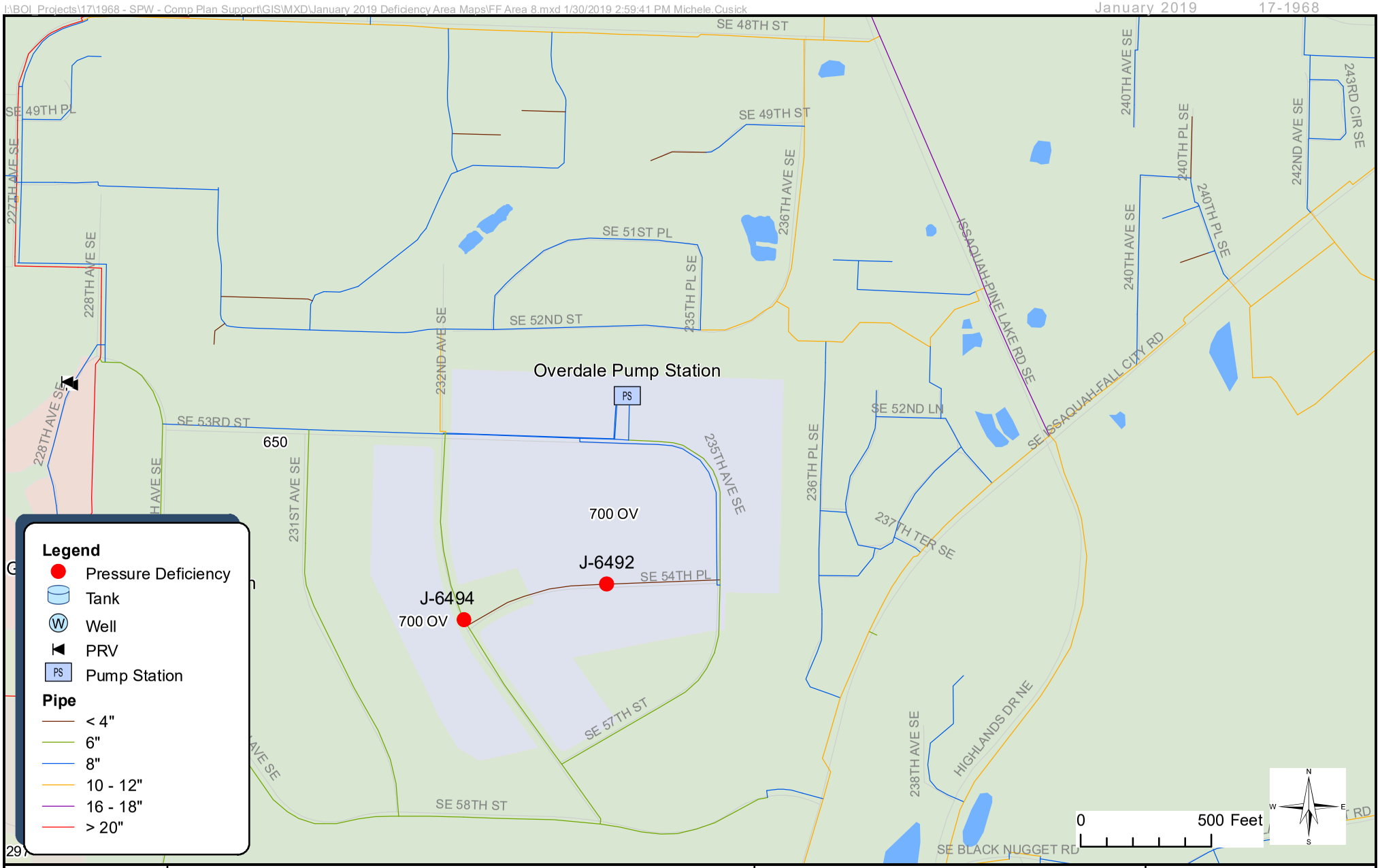

murraysmith

Sammamish Plateau Water
2037 FF Deficiencies

Figure 7
FF Area 8

Sammamish Plateau Water

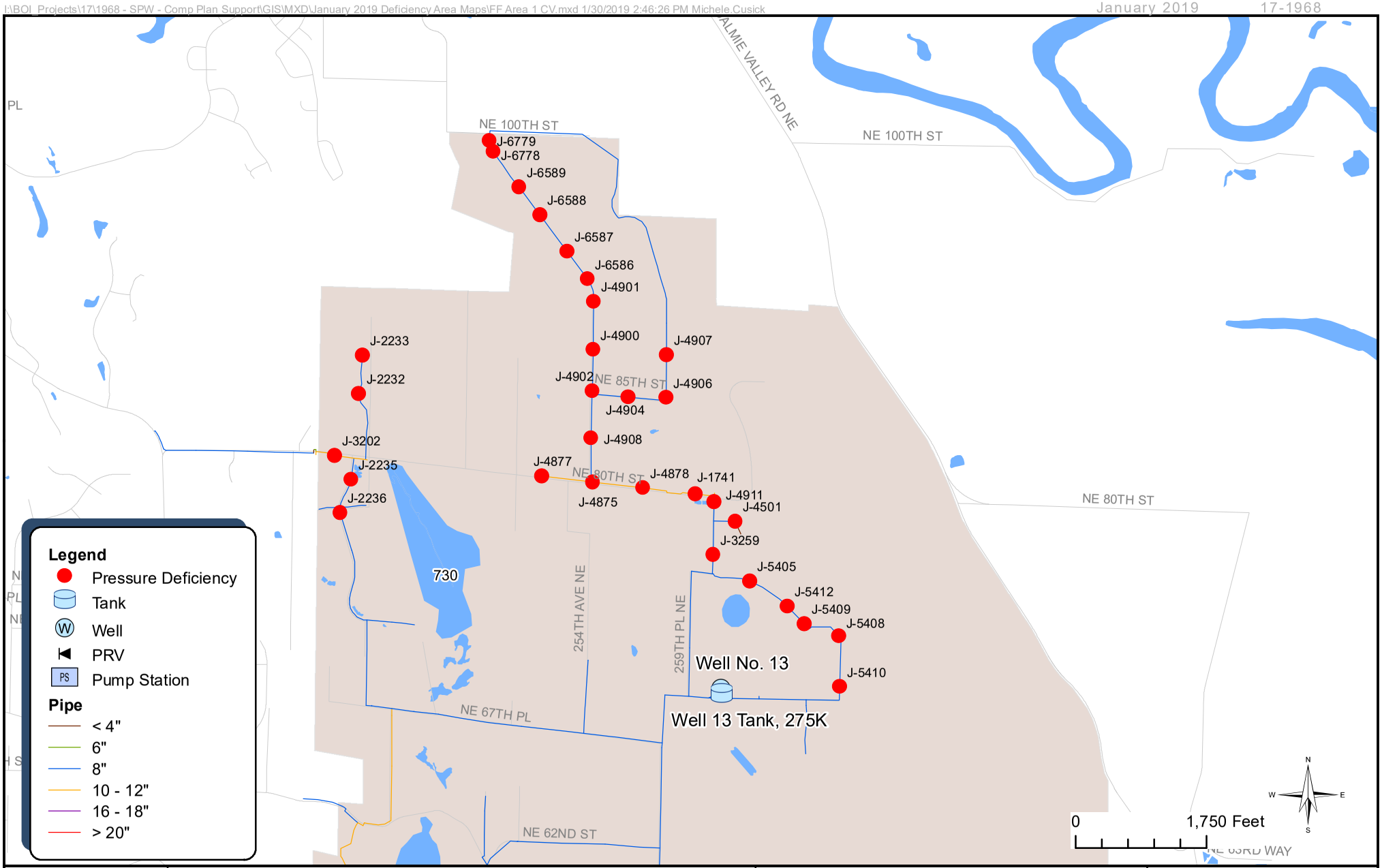

murraysmith

Sammamish Plateau Water
2037 FF Deficiencies

Figure 8
FF Area 1 CV

Sammamish Plateau Water

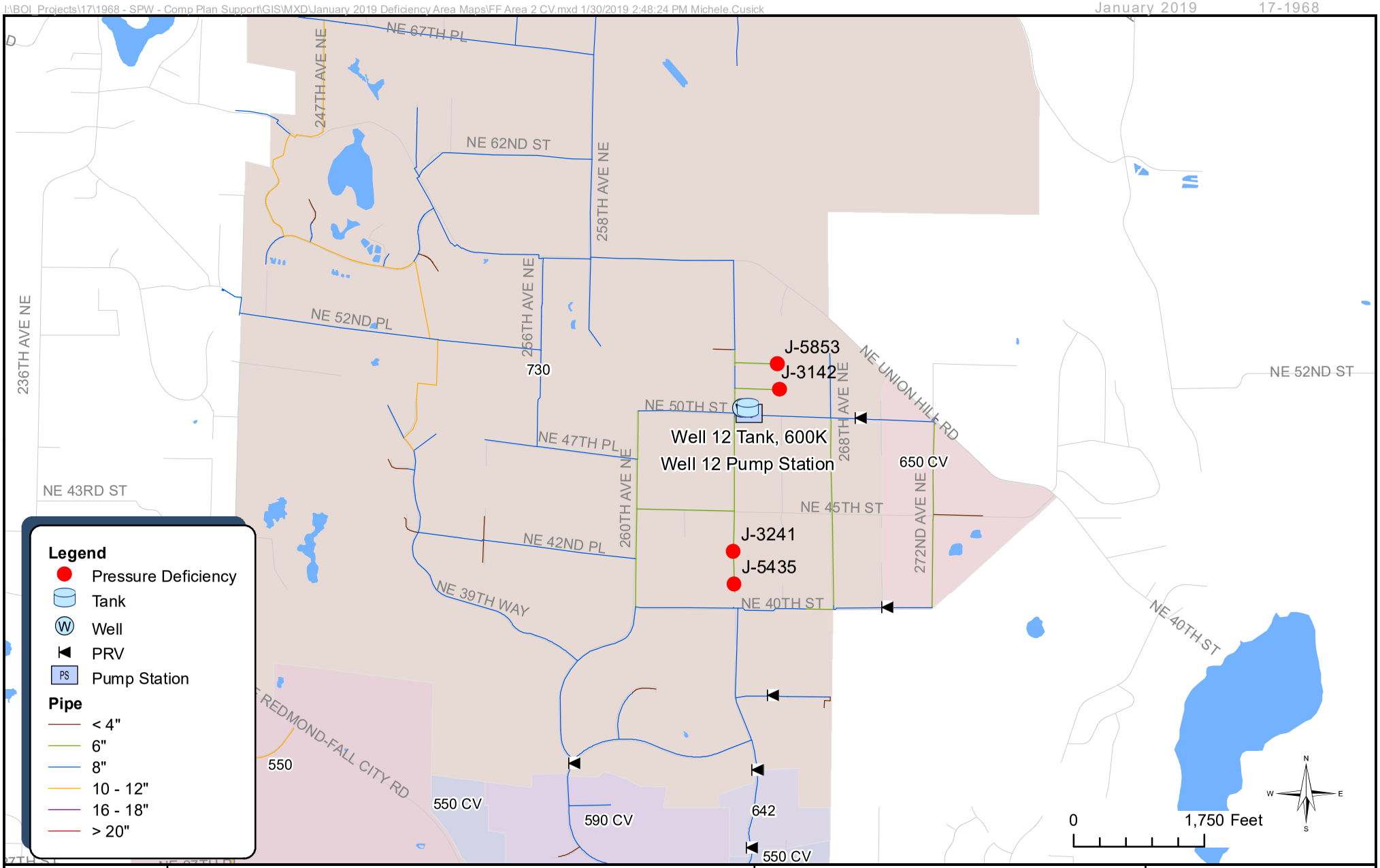

murraysmith

Sammamish Plateau Water
2037 FF Deficiencies

Figure 9
FF Area 2 CV

Sammamish Plateau Water

Table 3-10 - 2037 Fire Flow Deficiencies Plateau Zone

Area ID	Zone	Model Junction ID	Fire Flow Required (gpm)	2037 Available Flow (gpm)	Notes (see Figures 8-1 & 8-2)
FF Area 1	400 Broad	J-1932	1,000	555	Addressed by CIP Project FF-1 (8" main and PRV)
		J-1933	1,000	677	
		J-3268	1,000	974	
		J-3270	1,000	977	
FF Area 2	475	J-2070	1,000	909	Addressed by CIP Projects FF-3 and FF-4 (8" main)
		J-4258	1,000	833	
		J-4259	1,000	834	
FF Area 3	540	J-4231	3,000	1,492	Addressed by CIP Project FF-5 (PRV)
		J-6161	3,000	1,509	
		J-6162	3,000	1,508	
		J-6175	3,000	1,518	
FF Area 4	650	J-4424	4,000	1,557	Addressed by CIP Projects FF-6 and FF-7 (16" and 12" main)
		J-4425	4,000	1,573	
		J-4427	4,000	1,556	
		J-4429	4,000	1,618	
		J-6164	4,000	1,522	
		J-6174	4,000	2,253	
		J-7000	4,000	1,538	
		J-7001	4,000	1,529	
FF Area 5	297	J-5168	1,000	884	Addressed by CIP projects FF-9 and FF-10 (8" main and PRV)
FF Area 6	650	J-3747	3,000	2,309	Addressed by CIP Project FF-8 (12" main)
FF Area 7	297	J-223	1,000	976	Addressed by CIP Project FF-11 (8" main and PRV)
		J-532	1,000	505	
		J-1620	1,000	428	
		J-2529	1,000	613	
		J-2547	2,500	1,781	
		J-6532	3,000	1,743	
		J-6534	3,000	1,762	
		J-7104	1,000	883	Addressed by CIP Project FF-12 (8" main)
FF Area 7	499	J-2533	1,000	580	Addressed by CIP Project FF-11 (8" main)
FF Area 8	700 OV	J-6492	1,000	264	Addressed by CIP Project FF-13
		J-6494	1,000	263	

Table 3-11 - 2037 Fire Flow Deficiencies Cascade View Zone

Area ID	Zone	Model Junction ID	Fire Flow Required (gpm)	2037 Available Flow (gpm)	Notes (see Figures 8-1 & 8-2)
FF Area 1 CV	730	J-1741	1,000	878	Addressed by CIP Projects FF-14 and FF-15
		J-3259	1,000	899	
		J-4501	1,000	899	
		J-4875	1,000	854	
		J-4877	1,000	855	
		J-4878	1,000	853	
		J-4900	1,000	854	
		J-4901	1,000	854	
		J-4902	1,000	854	
		J-4904	1,000	853	
		J-4906	1,000	853	
		J-4907	1,000	853	
		J-4908	1,000	854	
		J-4911	1,000	889	
		J-5405	1,000	818	
		J-5408	1,000	857	
		J-5409	1,000	788	
		J-5410	1,000	944	
		J-5412	1,000	749	
		J-6586	1,000	853	
		J-6587	1,000	854	
		J-6588	1,000	853	
		J-6589	1,000	853	
		J-6778	1,000	853	
		J-6779	1,000	853	
		J-2233	1,000	948	
		J-3202	1,000	965	
		J-2232	1,000	966	
FF Area 1 CV	730	J-2235	1,000	967	Addressed by CIP Projects FF-14 and FF-15
		J-2236	1,000	976	
FF Area 2 CV	730	J-5853	1,000	929	Addressed by CIP Project FF-16
		J-3142	1,000	911	
		J-3241	1,000	923	Addressed by CIP Project FF-17
		J-5435	1,000	922	

This page intentionally left blank.

Appendix N

Cascade WUE Goal and Reclaimed Water Analysis

This page intentionally left blank.

CASCADE WATER ALLIANCE

SPECIAL MEETING MINUTES OF THE
BOARD OF DIRECTORS
BELLEVUE CITY HALL
OCTOBER 23, 2013

1. CALL TO ORDER

At 3:31 p.m. Chair John Marchione called the meeting to order.

2. ROLL CALL

Board Members or Alternate Board Members from the City of Bellevue (Davidson), Skyway Water & Sewer District (Ault), City of Issaquah (Butler), Sammamish Plateau Water & Sewer District (Warren), City of Redmond (Marchione), City of Kirkland (Sweet), and City of Tukwila (Haggerton).

3. PUBLIC COMMENT

None.

4. EXECUTIVE SESSION

None.

5. APPROVAL OF AGENDA

Motion by Mr. Ault and second by Mr. Haggerton to approve the meeting agenda. Motion carried unanimously (7-0).

6. CHIEF EXECUTIVE OFFICER'S REPORT

Chuck Clarke made the following report:

- Congratulations to Chris Paulucci, Cascade's Business Manager, as he recently earned his CPA license.

7. CONSENT ACTION ITEMS

None.

8. **OTHER ACTION ITEMS**

a. Motion to adopt Resolution No. 2013-11 establishing Cascade's water use efficiency goal for 2014 – 2019.

Motion by Mr. Ault and second by Mr.Haggerton to approve Other Action Item 8a. Motion carried unanimously (7-0).

9. STAFF PRESENTATION

None.

10. COMMITTEE REPORTS

None.

11. NEW BUSINESS

None.

12. NEXT REGULAR MEETING

The next regular Board meeting will be held Wednesday, November 20, 2013, at 3:30 p.m. at Bellevue City Hall.

13. ADJOURN

The meeting was adjourned at 3:41 p.m.

APPROVED BY:

John Marchione, Chair

Jim Haggerton, Vice-Chair

Attachment 1

CASCADE WATER ALLIANCE
RESOLUTION NO. 2013-11

A RESOLUTION OF THE BOARD OF DIRECTORS OF THE CASCADE WATER ALLIANCE, A WASHINGTON MUNICIPAL CORPORATION, CONCERNING WATER EFFICIENCY GOAL SETTING

WHEREAS, the Cascade Water Alliance (Cascade) is a Washington Nonprofit Corporation comprised of Municipal Corporations and special purpose Municipal Corporations which is organized under the authority of the Interlocal Cooperation Act (Chapter 39.34 RCW) for the purpose of providing drinking water supply to meet the growing demands of its Members and to promote the wise and efficient use of resources; and

WHEREAS, Cascade is committed to responsible and proactive management of the region's natural resources through water efficiency efforts; and

WHEREAS, Cascade manages the requirements of the Washington water use efficiency rule and goal setting on behalf of its Members; and

WHEREAS, it is in Cascade's and its Members' financial, resource management and environmental interest to utilize existing water resources and pursue water savings activities that will help delay the development of new drinking water supplies until all current available water supplies are put to maximal use; and

WHEREAS, Cascade can maximize its current available water supply by reducing critical water intensive peak season demand through outreach, education, and identified critical water efficiency programs for its Members that address peak season demand;

NOW THEREFORE, BE IT RESOLVED BY THE BOARD OF DIRECTORS OF THE CASCADE WATER ALLIACE as follows:

Section 1. Cascade will dedicate outreach, education, and programmatic resources necessary to achieve on behalf of its Members a cumulative drinking water savings of 0.6 million gallons per day on an annual basis and 1.0 million gallons per day on a peak season (June – September) basis by 2020.

Section 2. Cascade will review its water efficiency program annually during the budget process and determine the program budget necessary to effectively optimize its water supply.

Section 3. Cascade will maintain a water efficiency program which ensures that its Members are in compliance with the Washington Department of Health water use efficiency rule.

ADOPTED AND APPROVED by the Board of Directors of the Cascade Water Alliance at the regular meeting thereof, held on the 23 date of October, 2013.

ATTEST:

Chuck Clarke, CEO

CASCADE WATER ALLIANCE

John Marchione, Chair

Jim Haggerton, Vice Chair

Fred Butler, Secretary/Treasurer

Members

Yes 7

No 0

Demand Share

Yes 100 %

No 0 %

Include in CWAC?

☐ Yes

☒ No

APPENDIX D

Reclaimed Water Opportunities

Reclaimed Water

Chapter 5 of the current TSP discusses Cascade's current outlook on current and potential future uses of reclaimed water in the Cascade service area. This appendix provides additional background information, drawn from Cascade's prior (2004) plan. While some of the specific sites for potential use of reclaimed water may have changed in the interim, the overall opportunities for reclaimed water remain similar at this time.

Reclaimed water is defined by Chapter 90.46 RCW as "effluent derived in any part from sewage from a wastewater treatment system that has been adequately and reliably treated, so that as a result of that treatment, it is suitable for a beneficial use or a controlled use that would not otherwise occur and is no longer considered wastewater."

Reclaimed water can be used for activities such as irrigation to aid water suppliers in meeting the needs of their customers by reducing the demands upon high-quality potable water supplies, especially during peak use times. The use of reclaimed water may also benefit the environment by decreasing the need for withdrawals from streams and groundwater, recharging aquifers that are in hydraulic continuity with streams, and potentially directly augmenting streamflows.

Sources of Reclaimed Water

Municipal wastewater treatment plants are the typical source of reclaimed water. The majority of water customers served by Cascade Members receive wholesale wastewater conveyance and treatment services provided by King County Department of Natural Resources and Parks, Wastewater Treatment Division (King County WTD). At this time King County WTD represents the sole potential generator of reclaimed water for use by Cascade Members. There are three categories of reclaimed water sources owned and operated by King County WTD, as described below.

South Treatment Plant

The South Treatment Plant, located in Renton (see Figure 6.1), is in close proximity to Tukwila and Skyway, and is therefore considered a logical source of reclaimed water supply for Cascade.

The South Treatment Plant's current design capacity for treating wastewater is 115 MGD on an average daily basis. Present flows average approximately 80 MGD. A planned expansion will increase plant capacity to 135 MGD by 2029.

A portion of the South Treatment Plant flows is currently treated to allow for reuse. One of Cascade's Members, the City of Tukwila, has been using Class A reclaimed water from this source since 1998. A supply line extends from the treatment plant to Fort Dent Park in Tukwila. The reclaimed water is used primarily for irrigation of ballfields at the park, as well as a few minor uses such as street sweeping. A delivery system has also been installed to the Foster Golf Links site for future use.

Brightwater

King County WTD recently developed the Brightwater Regional Treatment System, located in Snohomish County northeast of Woodinville (see Figure 6.2). Treatment plant start-up and operations began in September 2011, with the system scheduled to be completed in 2012.

The treatment capacity of Brightwater is anticipated to be 36 MGD, on an average daily basis. Plant expansions will increase capacity to 54 MGD by 2040.

A key feature of the Brightwater project is the planned additional treatment for a portion of the facility's flows, allowing for reuse at the plant site and throughout a sizeable service area. It is anticipated that approximately 10 MGD of reclaimed water will be available from the Brightwater facility. It is anticipated that this supply will be made available to the area west of the facility (along the Brightwater effluent corridor, which runs along the King/Snohomish County line to Puget Sound) and to the south (potentially into the Sammamish Valley). The area south of Brightwater includes the northern end of Cascade's service area.

Satellite Facilities

King County WTD's South Treatment Plant and Brightwater Regional Treatment System are the two identified regional sources of reclaimed water supply. However, there is a potential for development of smaller, satellite reuse facilities designed to serve a more local need. King County has expressed a desire to explore the possibilities of constructing one or more satellite treatment plants in cooperation with local communities and/or water purveyors. One Cascade Member that has also shown interest in this concept is Covington Water District. Throughout 2007-2009, the District and the County jointly examined the feasibility of implementing a reuse system utilizing a satellite treatment facility. However, such a concept was determined to not be cost-effective for the near-term, and thus has not been advanced further.

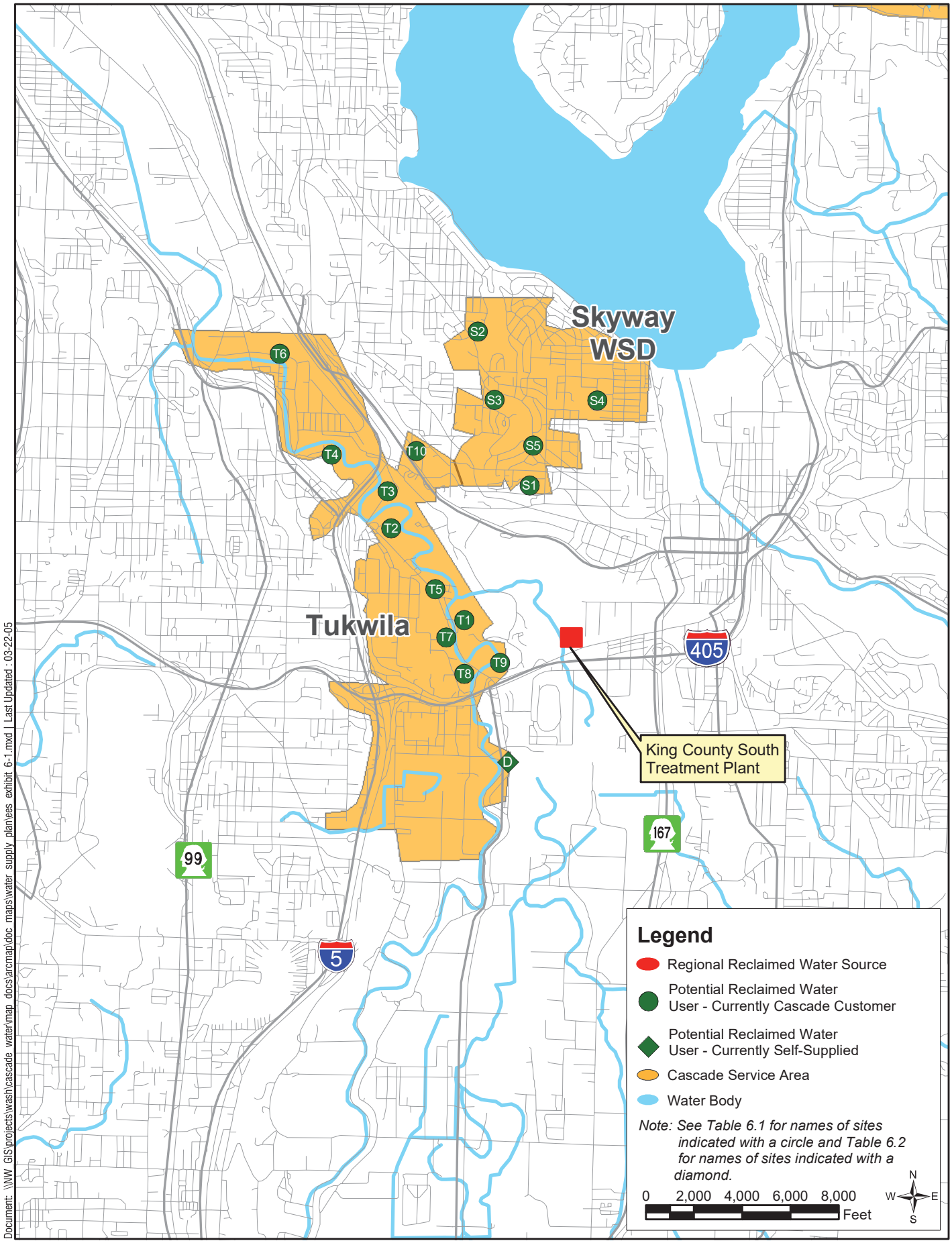

Document: \\WW_GIS\projects\wash\cascade_water\map_docs\arcmap\doc_maps\water_supply_plan\ees_exhibit_6-1.mxd | Last Updated : 03-22-05

Reclaimed Water Sources and Potential Users - Tukwila and Skyway WSD

FIGURE 6.1

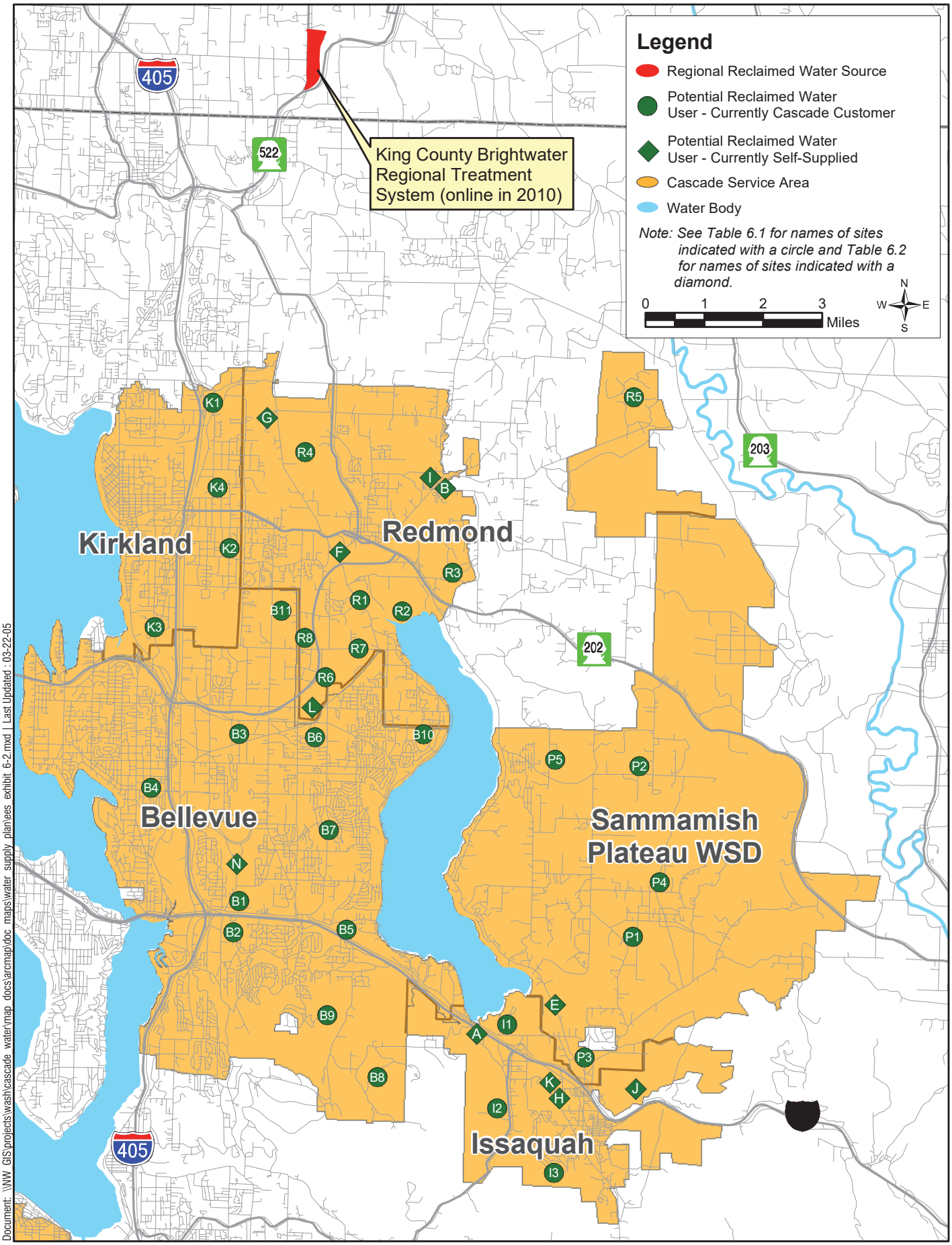

Document: \\WW GIS\projects\wash\cascade water\map docs\arcmap\doc maps\water supply plan\ees exhibit 6-2.mxd | Last Updated : 03-22-05

Reclaimed Water Sources and Potential Users - North Cascade Members

FIGURE 6.2

Applications of Reclaimed Water

Water utility planning includes evaluating the cost-effectiveness of various supply options. The feasibility of new sources of supply is partially based on the cost of developing such supplies and examining how these costs compare to existing supplies. Implementation of a water reuse program must also be viewed through this utility management lens when evaluating the feasibility of reuse versus other sources of supply. From this perspective of cost and feasibility, there are two broad categories of reuse programs: 1) service to existing water-using facilities and retrofit of existing systems; and 2) service to new development.

For a utility serving a highly developed area (i.e., a service area that is at or near buildout), a water reuse program will be almost exclusively of the first type, with service to existing customers. While there may be customers for whom the use of reclaimed water seems logical, as they use large quantities of water for non-potable purposes, the cost of delivery may be so great as to make it infeasible. Costs include the extension of water reuse pipelines to such customers and retrofits to the customer's plumbing, which can sometimes be quite extensive.

Many times, a reuse program is more feasible for those utilities that anticipate serving new development. Feasibility increases when provision of reclaimed water can be included in the early planning stages of both the future customer's onsite plumbing and the utility's infrastructure improvements. Early planning and coordination of such activities drastically reduces costs and will make reuse a more feasible option for a utility.

Cascade Members represent a blend of the above opportunities. This section identifies known and potential future applications of reclaimed water by existing Cascade customers. The primary applications of reclaimed water considered in this review are landscape irrigation and non-potable industrial use, as these constitute the largest components of municipal potable water demand that may be replaced by reclaimed water. Other, minor uses of reclaimed water are discussed where specifically identified by Cascade Members.

Application of reclaimed water service to new development is not specifically assessed, as it is challenging to estimate appropriate quantities of demand. However, new developments may also present opportunities for using reclaimed water.

This review is based primarily upon information provided by Cascade Members during preparation of Cascade's 2004 Transmission and Supply Plan, and supplemented by data contained in previous reuse marketing studies conducted by King County. Cascade Members were interviewed and asked to describe their water reuse planning activities, if any. This included identifying any reuse activities through 2004 as well as known planned opportunities or projects at that time. Furthermore, the Members were also asked to provide account information for their top ten largest water customers (i.e., historical usage). From these lists, those accounts were identified that represent irrigation or industrial uses suitable for consideration of reclaimed water. These represent the primary reuse opportunities that exist for Cascade over the next twenty years.

The information provided by the Members was then compared against previous studies performed by King County, in which potential reclaimed water application sites were identified. Where additional opportunities were identified, these are included.

Table 6.1 provides a summary of water demand information obtained for each identified site. Figure 6.1 through Figure 6.3 provide the location for each site specifically listed in the table. For further details of this review, see Chapter 6 of Cascade's 2004 TSP.

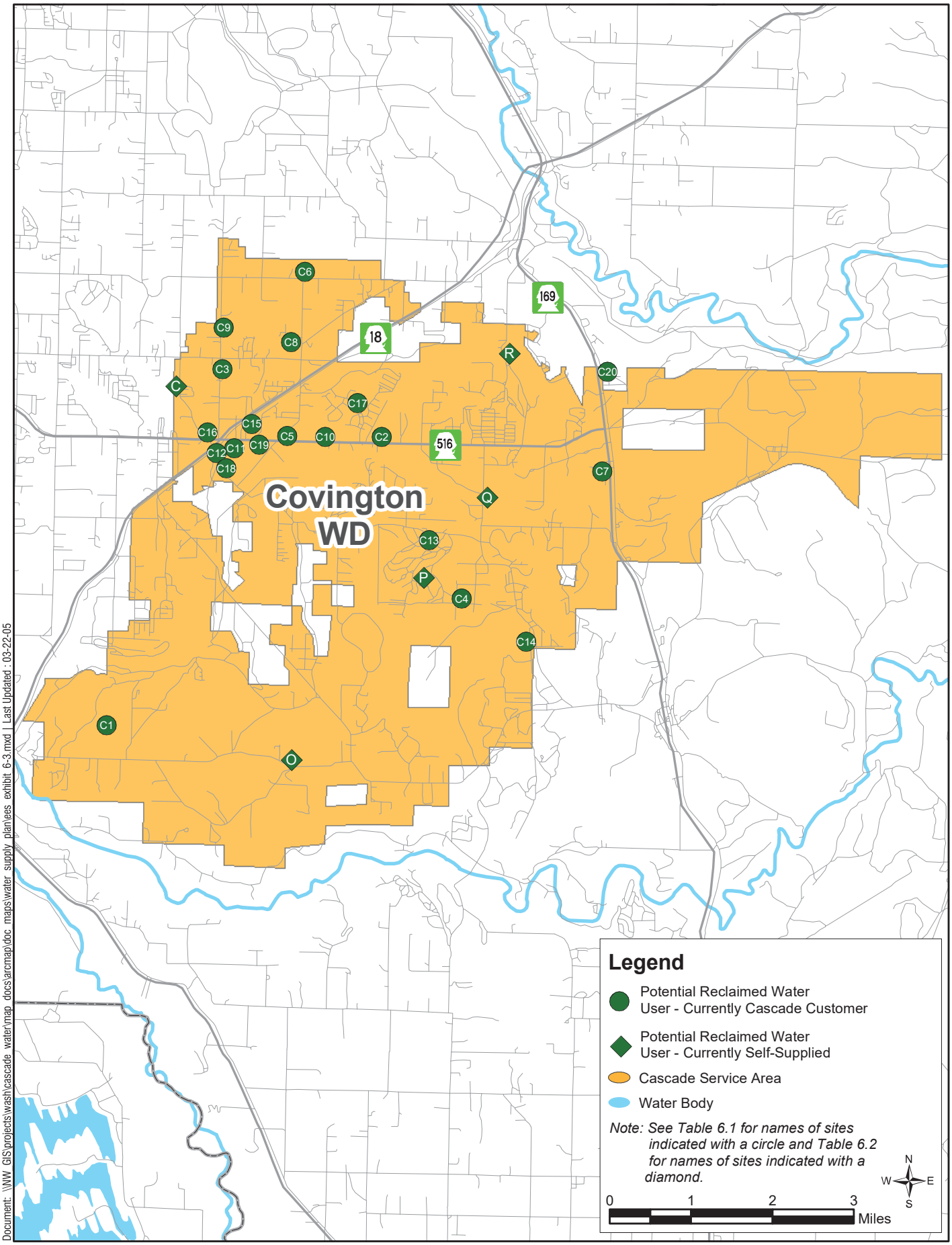

Document: \\WW_GIS\projects\wash\cascade_water\map_docs\arcmap\doc_maps\water_supply_plan\ees_exhibit_6-3.mxd | Last Updated : 03-22-05

Reclaimed Water Sources and Potential Users - Covington WD

FIGURE 6.3

Table 6.1 Summary of Existing Sites with Potential for Reclaimed Water Application [1]

Customer	Map Key (see Fig 6.1-6.3)	2003 Total Consumption (ccf)[2]	2003 Total Consumption (gal)[3]	2003 Average Day Demand (gpd)[4]	2003 Peak Season Demand (gpd)[5]
Bellevue					
Bellevue Community College	B1	4,571	3,419,108	9,367	28,025
Bentall Capital/Five Newport	B2	10,040	7,509,920	20,575	61,557
Foothill Commons Apts.	B3	4,062	3,038,376	8,324	24,905
Double Tree Inn	B4	5,251	3,927,748	10,761	32,195
Boeing Computer Services	B5	5,145	3,848,460	10,544	31,545
Central Park East Apts.	B6	5,332	3,988,336	10,927	32,691
Colony Woods Apts.	B7	6,223	4,654,804	12,753	38,154
Montreux-Glacier Ridge	B8	14,413	10,780,924	29,537	88,368
Overlook at Lakemont	B9	4,023	3,009,204	8,244	24,666
Tam O'Shanter Golf Course	B10	10,066	7,529,368	20,628	61,716
Bellevue Municipal Golf Course[10]	B11	N/A	N/A	N/A	61,716
Subtotal - Bellevue		69,126	51,5076,248	141,661	485,538
Covington					
Washington National	C1	72,024	53,873,952	147,600	441,590
Cedar Heights Jr. High	C2	9,876	7,387,248	20,239	60,551
Kentwood High School	C3	5,968	4,464,064	12,230	36,591
Kentlake High School	C4	5,124	3,832,752	10,501	31,416
Covington Medical Park	C5	4,704	3,518,592	9,640	28,841
Tahoma school district #4	C6	3,554	2,658,392	7,283	21,790
Glacier Park Elementary	C7	3,336	2,495,328	6,837	20,454
Crestwood Elementary	C8	3,289	2,460,172	6,740	20,165
Mattson Jr. High	C9	2,922	2,185,656	5,988	17,915
Jenkins Creek Elementary	C10	2,480	1,855,040	5,082	15,205
Covington Retail Assoc.	C11	2,474	1,850,552	5,070	15,168
Chevron - Carwash	C12	2,242	1,677,016	4,595	4,595
Remington Homeowners Assoc.	C13	1,861	1,392,028	3,814	11,410
Sawyer Woods Elementary	C14	1,771	1,324,708	3,629	10,858
Covington Apartments LLC	C15	1,632	1,220,736	3,344	10,006
King County Library System	C16	1,511	1,130,228	3,097	9,264
Cedar Valley Elementary	C17	1,416	1,059,168	2,902	8,682
Fred Meyer	C18	1,337	1,000,076	2,740	8,197
Covington Square N.E.	C19	1,075	804,100	2,203	6,591
Rock Creek Elementary	C20	1,064	795,872	2,180	6,524
Subtotal - Covington		129,660	96,985,680	265,714	785,813
Issaquah					
Port Blakely Communities	I1	13,716	10,259,568	28,108	84,095
Talus Residential Property	I2	4,645	3,474,460	9,519	28,479
Darigold	I3	50,000	37,400,000	102,466	102,466
Subtotal - Issaquah		68,361	51,134,028	140,093	215,040
Kirkland					
Lake Washington Technical College	K1	3,682	2,754,136	7,546	22,575
Rose Hill Car Wash	K2	3,657	2,735,436	7,494	7,494
Carillon Properties	K3	14,194	10,617,112	29,088	87,026
Costco	K4	5,725	4,282,300	11,732	35,101
Subtotal - Kirkland		27,258	20,388,984	55,860	152,196
Redmond					
Marymoor Park	R1	ND	ND	ND	1,100,000
TTM Technologies	R2	49,834	37,275,832	102,126	305,540
Genie Industries	R3	27,631	20,667,988	56,625	169,410
Willows Run Golf Course[9]	R4	NA	NA	NA	320,000
Trilogy Golf Course	R5	45,165	33,783,420	92,557	276,913
Honeywell International	R6	23,492	17,572,016	48,143	144,033
Microsoft	R7	284,811	213,038,628	583,667	1,746,218
Nintendo	R8	10,982	8,214,536	22,506	67,332
Subtotal - Redmond		441,915	330,552,420	905,623	4,129,446

Table 6.1 Summary of Existing Sites with Potential for Reclaimed Water Application (1) (cont.)

Customer	Map Key (see Fig 6.1-6.3)	2003 Total Consumption (ccf) (2)	2003 Total Consumption (gal) (3)	2003 Average Day Demand (gpd) (4)	2003 Peak Season Demand (gpd) (5)
Sammamish Plateau					
Issaquah School District, Skyline	P1	5,316	3,976,368	10,894	32,593
Inglewood Junior High	P2	5,289	3,956,172	10,839	32,428
Timbers 3169, Simpson Housing	P3	4,644	3,473,712	9,517	28,473
Beaver Lake Ballfields	P4	4,238	3,170,024	8,685	25,984
East Sammamish Park	P5	3,318	2,481,864	6,800	20,343
Subtotal - Sammamish Plateau		22,805	17,058,140	46,735	139,821
Skyway					
King County Parks	S1	2,371	1,773,508	4,859	14,537
The Lakeshore	S2	2,290	1,712,920	4,693	14,040
Campbell Hill Elementary	S3	1,822	1,362,856	3,734	11,171
Dimmitt Middle School	S4	1,698	1,270,104	3,480	10,411
Bryn Mawr Elementary	S5	1,051	786,148	2,154	6,444
Subtotal - Skyway		9,232	6,905,536	18,919	56,603
Tukwila					
Fort Dent Park (6)	T1	ND	ND	ND	20,000
Foster Golf Links (7)	T2	ND	ND	ND	100,000
Seattle Rendering Plant (8)	T3	ND	ND	ND	60,000
Jorgesen Forge	T4	8,927	6,677,396	18,294	54,733
Boeing PSAM 12-0380	T5	19,770	14,787,960	40,515	121,213
Boeing PSAM 12-0370	T6	18,148	13,574,704	37,191	111,268
Fairway Center Office Park	T7	ND	ND	ND	ND
A.K. Pacific Erect Inc.	T8	ND	ND	ND	ND
Eriks West	T9	ND	ND	ND	ND
Towne and Country Suites	T10	ND	ND	ND	ND
Subtotal - Tukwila		46,845	35,040,060	96,000	467,214

Notes:

ND = No Data Provided or Available; NA = Not Applicable

1. These sites represent either planned opportunities (where specifically noted) or potential opportunities based on analysis of the largest current irrigation and industrial water customers for each purveyor.
2. From Cascade Member billing records, except where noted.
3. Converted from ccf to gpd.
4. Annual amount divided by 365 days per year.
5. Converted from annual amount to average day demand during peak season. The following assumptions are made:

   Irrigation sites - Peak season use only. Peak season assumed to be 122 days (4 months) long.

   Industrial sites - Annual use divided by 365 days (full year).
6. Currently served customer.
7. Tukwila plans to provide reclaimed water to the golf course by 2010. The use of reclaimed water by the golf course will help offset demand from its water right on the Green River. As this will not reduce Tukwila's potable water demand, the amount associated with the golf course is not included in the reclaimed water demand forecast presented in Table 6.3.
8. Tukwila plans to provide reclaimed water to the rendering plant by 2010.
9. Willows Run Golf Course obtains some water from Redmond, though a majority of irrigation water used is obtained from its own Sammamish River supply.

   The peak season demand shown here is obtained from the Brightwater Final Environmental Impact Statement – Appendix 3-D, Reclaimed Water Technology Review and Evaluation of Potential Water Reuse Opportunities (September 2003).
10. Bellevue Municipal Golf Course obtains irrigation from a City-owned well that has a 100 gpm instantaneous water. No meter records were available for review. Therefore, peak season demand is assumed to be equal to that of Tam O'Shanter Golf Course, for purposes of this analysis

Potential Opportunities with Self-Supplied Water Users

A review of self-supplied water users located within Cascade Members' service areas was also conducted for the 2004 TSP to determine if there are large irrigation or industrial water uses not

presently served by Cascade that might benefit from use of reclaimed water. This is of interest to King County because of the possibility of reducing well withdrawals that might have local impacts on nearby streams. There may be an opportunity for Cascade Members to convey and deliver reclaimed water to new customers currently obtaining water from their own sources of supply.

To investigate the reclaimed water potential associated with self-supplied water users, an analysis of water right information was performed. Data contained within the Department of Ecology's Water Rights Application Tracking System (WRATS) database were reviewed for the areas served by Cascade Members. Only those irrigation and industrial water rights translating to potential water uses of 50,000 gpd or greater were considered. For landscape irrigation, this translates to water rights with instantaneous quantities greater than 100 gallons per minute (gpm) for groundwater rights and 0.23 cubic feet per second (cfs) for surface water rights, assuming maximum daily pumping/diversion times of 8 hours. In terms of industrial water rights, which are typically exercised year-round, this translates to an annual water right quantity of 56 acre-feet or greater.

Based upon the above criteria, the water rights review revealed that there are 41 records associated with irrigation water rights having points of diversion/withdrawal within Cascade Members' service areas. Thirty of these are surface water rights, with an associated total instantaneous quantity of 17.77 cfs. The remaining 11 rights are groundwater rights with an associated total instantaneous quantity of 4,112 gpm. In addition, there are water rights of 4.0 cfs and 160 gpm associated with a golf course located outside of, but adjacent to, the service area boundary of the Sammamish Plateau Water and Sewer District.

The review also indicated that there are 14 commercial/industrial water rights located within the area of interest. One of these is a surface water right for 5.2 cfs, while the others are groundwater rights with an associated total instantaneous quantity of 5,820 gpm.

For clarity purposes, only the largest of the identified self-supplied users are depicted on Figure 6.1. This includes surface water rights greater than 1.0 cfs, and groundwater rights greater than 500 gpm. Also included are four golf courses located within the Covington service area. Although these sites did not meet the criteria described above for mapping, they are included because they may become pertinent to the satellite reuse program that Covington is considering.

Table 6.2 provides information regarding those sites depicted on Figures 6.1 to 6.3.

Table 6.2 Summary of Largest Currently Self-Supplied Water Users Located Within Cascade Member Service Areas

Map Key (see Fig 6.1-6.3)	Name of Water Right Holder	Qi (cfs) [2]
Surface Water Rights [1]		
A	King County Dept. of Natural Resources	5.2
B	Private Landowner (irrigation)	1.1
C	Private Landowner (irrigation)	1.0
D	Private Landowner (irrigation)	1.0
E	Private Landowner (irrigation)	1.0
F	Dickey Farms, Inc.	1.0
G	Private Landowner (irrigation)	1.0
Groundwater Rights [1]		

Map Key (see Figure 6.1-6.3)	Name of Water Right Holder	Qi (gpm) [2]
H	Consolidated Dairy	1,100
I	Cadman Gravel Co.	1,000
J	Lakeside Gravel	1,500
K	Issaquah Creamery	500
L	United Control Corp.	1,000
M	Willows Run Golf Course [3]	715
N	Sunset Hills Memorial Park	500
Self-Supplied Golf Courses Located within Covington Service Area [4]		
Map Key (see Figure 6.3)	**Name of Golf Course**	**Qi (gpm)**
O	Jade Green	N/A
P	Druids Glen	N/A
Q	Elk Run	N/A
R	Lake Wilderness	N/A

Notes:

1. Based on analysis of water right information, as obtained from Department of Ecology's Water Rights Application Tracking System (WRATS), November 2004.
2. Qi = Maximum allowed withdrawal on an instantaneous basis. Only those water rights having Qi greater than or equal to 1.0 cfs (for surface water) or 500 gpm (for groundwater) are shown.
3. This site is shown on Figure 6.1 as item R4 (see Table 6.1), as the site also receives water from Redmond.
4. Information provided by Covington.

CASCADE WATER ALLIANCE

Transmission and Supply Plan

July 2012

HDR

In association with

CDM

5. Long-term Sources of Supply

For the 2010 TSP Update, Cascade reviewed a wide range of potential water supply sources to meet the needs of its Members through at least the next 50 years. This chapter summarizes how this review was performed and identifies Cascade's preferred portfolio of water supplies to meet future needs to at least 2060.

5.1. Source Analysis Overview

The supply alternatives analysis was performed in stages, starting with a lengthy list of potential water supply sources and narrowing them to a preferred "portfolio" of supplies. Steps in the process are shown in Figure 5.1.

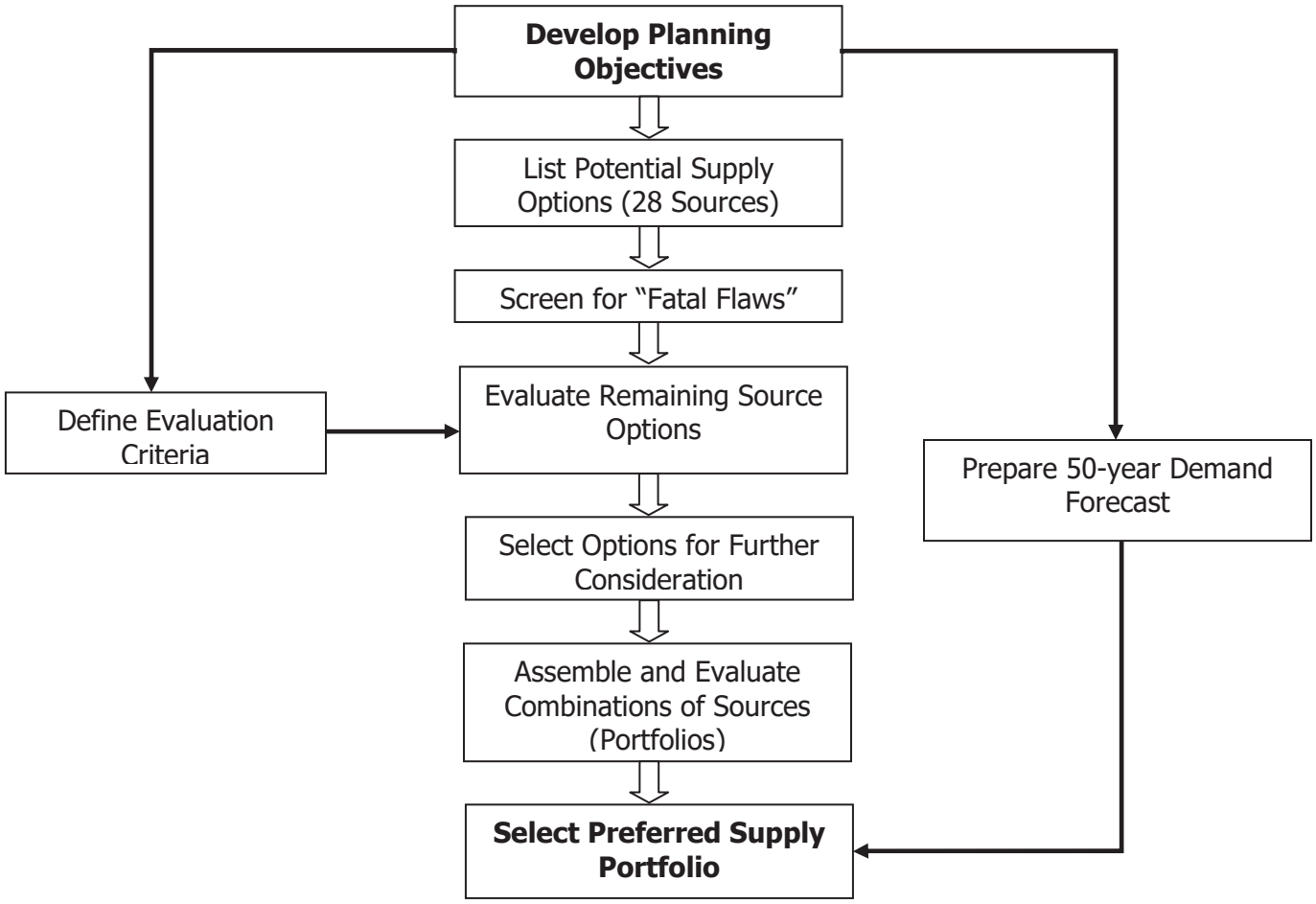

Figure 5.1: Source Analysis Overview

Cascade used the process described above to identify a combination of supplies for the period 2010 to 2060. Cascade reviewed data and results at each step with a stakeholder group formed to provide external input on the process. Information on the Cascade Connections Working Group is included in Appendix F.

Further information on the source analysis process and the specific sources selected is presented in the subsections that follow. Additional documentation of the source analysis is presented in two technical memoranda prepared for Cascade:

- *Supply Alternatives Assessment, Task 700*, December 2009 (CDM)
- *Supply Portfolio Analysis*, June 2010 (HDR)

5.2. Planning Objectives

Cascade held a Planning Objectives Workshop in February 2009. Participants included Cascade Board Members, Cascade Member staff, Cascade staff, and consultants. The following list of objectives was developed to guide the long-range planning process for the 2010 TSP:

- The TSP should identify a viable portfolio of water sources that can provide Cascade with secure and reliable supplies through at least 2050. A broad range of supply alternatives and project partnerships should be considered.
- The TSP should identify adequate supplies to at least serve the eight current Members of Cascade. It should also consider how investments in supply and infrastructure could serve additional water systems seeking new or replacement supplies and how these investments could improve reliability of supplies in the Central Puget Sound Region (King, Pierce and Snohomish Counties).
- The TSP should enable water rates to be managed at levels acceptable to water customers over the short and long terms.
- The TSP should provide flexibility to Cascade to adjust to changing circumstances or new opportunities. To this end, smaller supply projects, interim supplies, and phased development of larger supplies should be considered in the mix of source alternatives.
- The TSP should recognize the drop in current, contracted supplies at year 2024 and should outline a clear and viable path toward addressing Cascade's needs at that time.
- The plan should apply clear criteria and rationale for recommended actions. It should provide a sound basis for communication with elected officials, regulators, and water resource stakeholders in the Central Puget Sound Region.

These objectives guided decisions throughout the planning process. In addition, they served as the basis of a detailed set of criteria used to evaluate individual water supply options (see Section 5.4).

5.3. Identification and Screening of Potential Supply Sources

Several regional water studies have been carried out in the Central Puget Sound Region over the past 20 years. Cascade and its Members have participated in these studies and are familiar

with the range of water supply and management alternatives considered. An initial list of potential water supply options was developed based on the following sources:

- *Central Puget Sound Regional Water Supply Outlook* (2009).
- *East King County Coordinated Water System Plan* (1996).

Additional supply options were identified in workshops involving Cascade Members, Cascade staff, and the consulting team for the TSP. The resulting list of supply options considered in the initial screening step is shown in Table 5.1. Details on each option are presented in the Technical Memorandum *Supply Alternatives Assessment, Task 700* (December 2009).

Table 5.1: Initial List of Potential Water Supply Options

Existing Source Management	New Surface Water Options	New Ground Water Options	Reclaimed Water and Conservation
Tacoma "Light" TCP w/ Wheeling TCP w/ North Segment TCP Expanded SPU Expanded Block	Lake Tapps North Fork Tolt Everett- Sultan River Supply Expansion SRRWA – Snohomish River Supply Lake Washington Lake Sammamish Off-Stream Storage – Sammamish, Green River, Issaquah Creek Desalination	Chambers Creek Wells Snoqualmie Aquifer Deep Resource Aquifer Withdrawal (DRAW) OASIS Phases 1 & 2 OASIS Phase 3 Cascade Member ASR	Brightwater Reclaimed Water, South Segment South Treatment Plant Reclaimed Water, Tukwila Satellite Treatment Plants Reclaimed Water, King County Direct Potable Use of Reclaimed Water, Brightwater Enhanced Cascade Conservation 2 Stormwater Capture, Satellite Package Plants Rainwater Collection for golf courses Reduction in Regional Unaccounted-for-Water

ASR = Aquifer Storage and Recovery
OASIS = Lakehaven Utility District ASR Project
SPU = Seattle Public Utilities
SRRWA = Snohomish River Regional Water Authority
TCP = Tacoma-Cascade Pipeline

Six "fatal flaw" criteria were identified to eliminate any options that were clearly infeasible for Cascade to develop as regional sources. Failure on any one of these criteria led to removal of the option from further consideration. These criteria included the following:

- legal complications
- permitting/institutional complications
- water rights
- public acceptance
- quantity of supply yield (one million gallon per day threshold)

- location of supply (Sources outside Pierce, King and Snohomish County were not considered.)

Based on the fatal flaw criteria, eight sources were eliminated, as follows:

- North Fork Tolt
- Everett-Sultan River Supply Expansion
- Lake Sammamish
- Off-stream Storage
- OASIS Phases 1 and 2
- South Treatment Plant Reclaimed Water
- Rainwater Collection
- Reduction in Regional Unaccounted-for Water

Elimination of projects for purposes of the TSP does not mean these projects are not viable for local purposes or for development by other parties. For example, Tukwila uses reclaimed water from the South Treatment Plant, and either Tukwila or other water systems could expand local uses of that supply in the future.

5.4. Multi-criteria Evaluation of Supply Sources

The next step in the process was to further define and evaluate each of the remaining 20 supply options. Each of these projects is described in detail in the Technical Memorandum: *Supply Alternatives Assessment, Task 700*, December 2009 (CDM). The technical memorandum also provides details of the evaluation process.

Six criteria were defined to evaluate and compare the 20 source options. These criteria were developed at workshops with Cascade Members and staff held in March and April 2009. Each criterion was weighted so that more important criteria would have more influence in the evaluation. The criteria and weights are listed below:

- Financial considerations (26%)
- Supply reliability (weight: 22%)
- Operational considerations (18%)
- Environmental Considerations (16%)
- Implementation considerations (10%)
- Regional/intergovernmental considerations (8%)

The criteria were also discussed with the Cascade Connections stakeholder group that met periodically to provide input to Cascade's planning process. A separate weighting exercise was held with this group. Criteria weights assigned by the stakeholder group were similar to those assigned by Cascade.

Each criterion was further broken down into sub-criteria. For example, the reliability criterion was broken down into three sub-criteria: 1) availability of the supply; 2) variability of yield; and 3) vulnerability to emergency disruptions. All 20 sources considered in this step were then "scored" based on performance metrics defined for each sub-criterion.

Figure 5.2 displays the results of this procedure, using weighted scores from the highest ranked projects at the top to the lowest ranked projects at the bottom. The letters "I" and "P" designate interim supplies and permanent supplies, respectively. Water supply quantities shown are

expressed in million gallons per day (mgd) and represent approximate peak yield. Colors on the bars represent the weighted contribution from each major criterion.

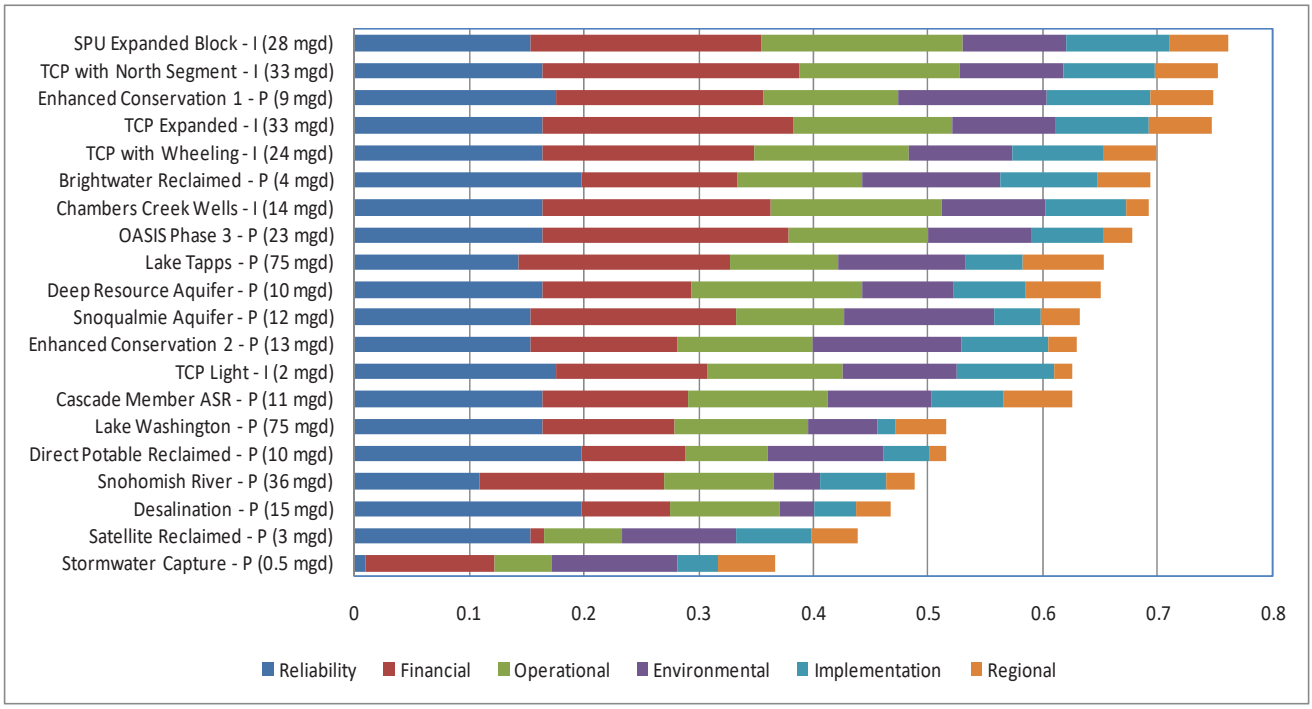

Figure 5.2: Results of Multi-criteria Evaluation

After reviewing the results of the multi-criteria analysis, the Cascade Resource Management Committee selected 11 of the 20 options for further consideration. However, three options representing water supply from Tacoma (TCP with wheeling, TCP north segment, and TCP expanded) were consolidated into a single option. The two options involving enhanced conservation by Cascade were also consolidated into a single option. This resulted in eight options carried forward into the next stage, as listed in Table 5.2.

Table 5.2: Water Supply Options Considered for Supply Portfolios

Existing Source Management	New Surface Water Options	New Ground Water Options	Reclaimed Water and Conservation
TPU Contract Supply* SPU Expanded Block	Lake Tapps	Deep Resource Aquifer Withdrawal OASIS Phase 3 Cascade Member ASR	Brightwater Reclaimed Water, South Segment Enhanced Cascade Conservation

* Includes alternative pipeline routes, wheeling, and/or a variation involving Covington Water District's share in the Tacoma Second Supply Project.

5.5. Development of Supply Portfolios

The next step of the supply evaluation was to examine how different water supplies could be combined into "portfolios" that could be developed in stages over a period of time to supply the projected needs of Cascade Members. The planning objectives described in Section 5.2 were

used to guide portfolio development. The portfolios include existing, developed sources of supply as well as the potential new supplies listed in Table 5.2.

A water demand forecast was prepared as described in Chapter 4 of this TSP. The demand curves were used to establish a range for the quantity of supply that will be needed year-by-year over the 50-year planning period.

Considerations used in assembling supply portfolios are listed below:

- Cascade's current Block Contract with SPU calls for the available supply to be reduced, in several stages between 2024 and 2045.
- Because of uncertainty in the long-term demand forecast, it is advantageous to include options that can delay the need for expensive infrastructure. Use of contracted supplies from one or a combination of sources (i.e., SPU, TPU, Covington Water District) can potentially make maximum use of existing regional supplies and infrastructure and reduce the need for new investments.
- At the same time, the White River - Lake Tapps Reservoir Project (Lake Tapps Project) provides a valuable future source of supply to Cascade and the region. If contracted supplies can be expanded in the future, Lake Tapps can serve as a long-term backstop supply for Cascade or its supply partners, or both. If contracted supplies cannot be increased at an economical cost, Lake Tapps can be used to supply Cascade's needs. Regional backstop supply will be particularly important in the event that climate change reduces water supplies that originate from the Cascade mountain range (SPU's Cedar and Tolt River sources and TPU's Green River source).
- Construction of one or more north-south transmission pipelines linking the Tacoma and Seattle regional supplies offers advantages not only to Cascade, but to both of these systems and their wholesale customers. A north-south link allowing water to flow in either direction could enhance reliability of the regional water supply system. These links would be constructed to deliver the Tacoma/Covington contract supplies and Lake Tapps Project supply.
- Of the larger sources of supply considered, the OASIS ASR project (Phase 3) appears less certain and more complex for Cascade participation. Therefore, OASIS was not built directly into the portfolios. However, this source remains a potentially viable supply option (in partnership with the project sponsor, Lakehaven Utility District) that could be substituted for another option.
- Four of the supply sources appear potentially viable yet are relatively small in terms of supply quantities available. These are: deep aquifer, Member ASR, reclaimed water, and enhanced conservation. Each of these sources also involves uncertainties and challenges for implementation. At the same time, the quantities of water available from these sources are highly flexible, and they can be developed more rapidly than large supplies requiring major infrastructure. For portfolio development, Cascade combined these supplies into a "small sources" category. While not directly included in the final portfolio, Cascade views the small sources as a menu of options that can provide additional flexibility if needed and can be activated in the event demands rise more rapidly than expected at any point during the planning period.

Cascade experimented with a variety of alternative portfolios. Three portfolios were reviewed and compared in a Technical Memorandum: *Supply Portfolio Analysis*, June 2010 (HDR). Briefly, these three portfolios are described below:

> **Portfolio 2:** Extension of the top block of SPU-contracted supply through 2030, activation of the Lake Tapps Project at 2030, and activation of small sources at 2055. (One variation of this portfolio also includes participation in Lakehaven's OASIS project [Phase 3] after 2060.)
>
> **Portfolio 4:** Activation of supply from TPU (and Covington Water District) at 2030, delaying the need for the Lake Tapps Project until 2045. Small sources used to fill supply gaps beginning in 2040 (or as needed at any time).
>
> **Portfolio 5:** Similar to Portfolio 4, but with additional extension of SPU supplies to defer the need for the Lake Tapps Project beyond 2060. This portfolio would also involve greater reliance on the menu of small sources.

The June 2010 Technical Memorandum presents appraisal-level cost estimates and results of a risk assessment for these three portfolios. In addition, the multi-criteria evaluation procedure described in Section 5.4 was applied to the three portfolios. The three portfolios received similar scores under the various criteria except for the financial criterion. The financial criterion ranked Portfolio 5 highest, then Portfolio 4, then Portfolio 3. This reflects the increased financial burden by constructing major infrastructure associated with the Lake Tapps Project, as opposed to deferring those costs by many years. Results were discussed in workshops and meetings held in 2010 with Cascade Members. Results were also discussed with the Cascade Connections Outreach Group.

5.6. Preferred Supply Portfolio

Cascade held extensive discussions with SPU and TPU aimed at increasing use of contracted supplies in a manner similar to Portfolios 2 and 4. However, at the time the Transmission and Supply Plan was prepared, these discussions had not led to updated agreements. While supply expansion from these sources remains a possibility for the future, Cascade determined the current TSP should treat existing contracts with SPU and TPU as fixed quantities.

Based on this outcome and the supply evaluation discussed earlier in this chapter, Cascade determined that the portfolio shown in Figures 5.3 and 5.4 (for maximum week and average day conditions, respectively) offers the best balance between supply and fiscal objectives, consistent with the planning objectives listed in Section 5.2. This preferred portfolio is similar to Portfolio 4 discussed above, though it does not include expanded use of water supply from SPU.

Figure 7.1 (see Chapter 7) displays the location of the larger supply elements included in this supply portfolio. More detailed information on the supplies and demands shown in Figures 5.3 and 5.4 is included in Appendix G.

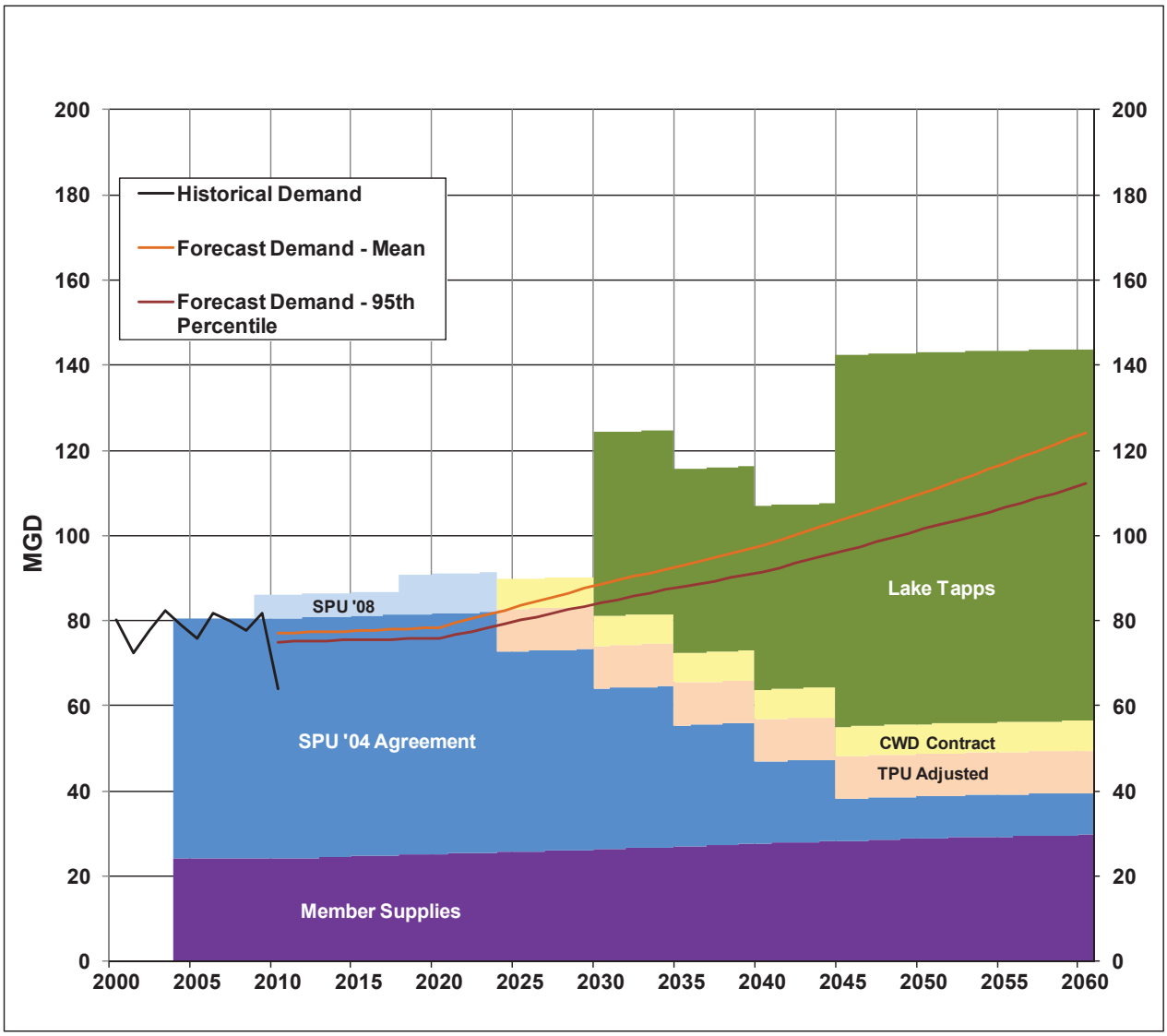

Figure 5.3: Cascade Supply Portfolio (Maximum Week Conditions)

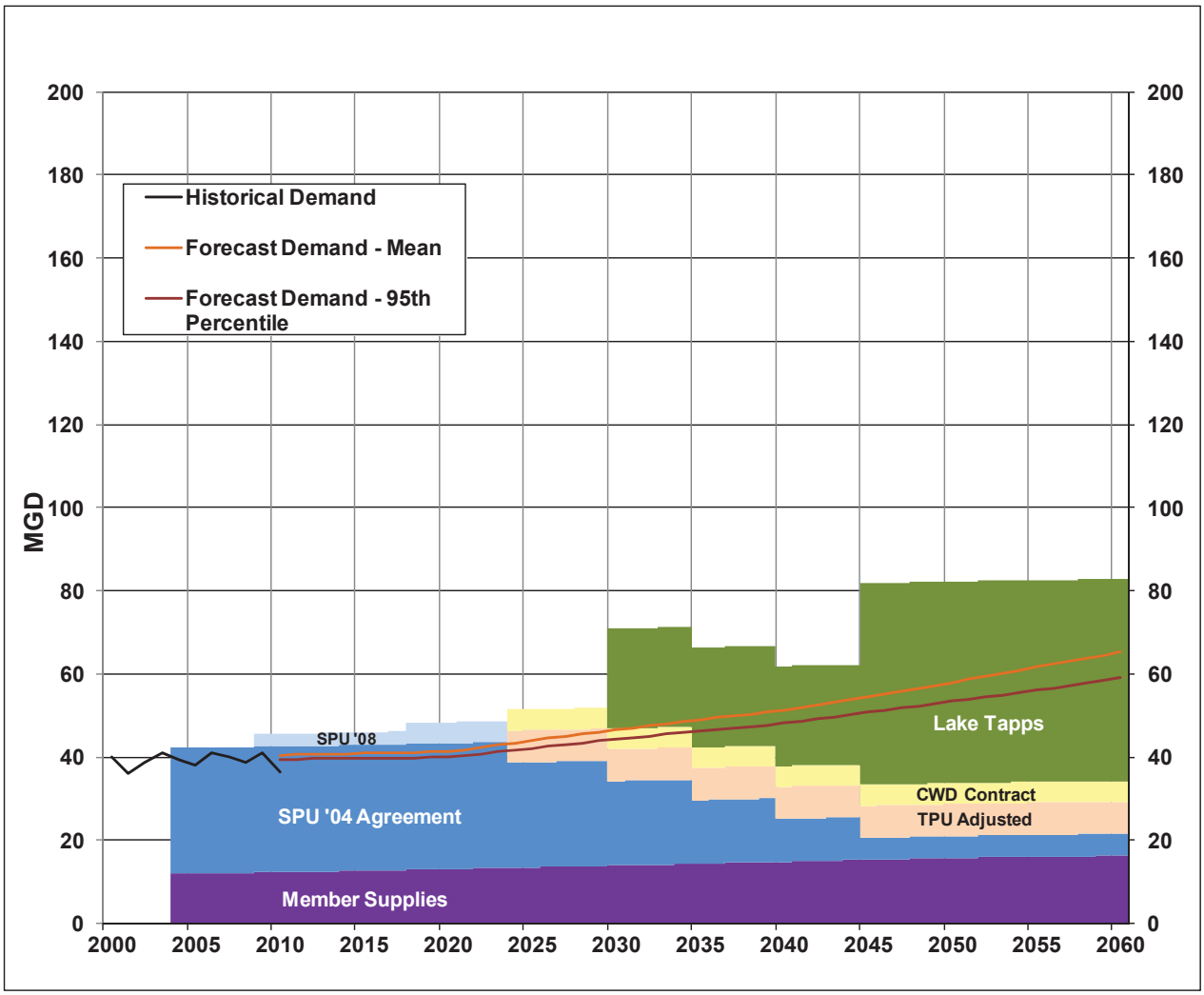

Figure 5.4: Cascade Supply Portfolio (Average Day Conditions)

Table 5.3 lists the various supply agreements that Cascade has with other water suppliers in the region to meet the long-term needs of Cascade Members.

Table 5.3: Agreements Affecting Future Water Supplies

Document	Date	Location
50-Year Declining Block Water Supply Agreement between the City of Seattle (SPU) and the Cascade Water Alliance	December 2008	Appendix B
Agreement for the Sale of Wholesale Water between the City of Tacoma, Department of Utilities, Water Division (TPU), and the Cascade Water Alliance	October 2005	Appendix H
Member Water Audits (Covington, Issaquah, Redmond, Sammamish Plateau, Skyway)	May 2008	Cascade Files
Lake Tapps Area Water Resources Agreement, with Auburn, Bonney Lake, Buckley and Sumner (Four Cities Agreement)	February 2010	Cascade Files

The exact quantities and timing of each supply may change, as supply investments will be made in stages based on actual growth in Cascade Member water demands over the coming decades. Cascade's supply planning principles call for maintaining a high degree of flexibility to match new supplies with water needs as economically as possible. For example, Cascade anticipates renewed discussions with SPU and TPU from time to time regarding possible expansion of contracted supplies in the future. It appears that both suppliers will have surplus supplies available for several decades, and access to these supplies on mutually-agreeable terms could potentially delay construction of the Tacoma-Cascade Pipeline or the Lake Tapps Project, or both, while reducing costs for all parties involved. Therefore, Cascade expects to review and optimize this portfolio each time the TSP is updated at six-year intervals.

The preferred supply portfolio includes the following sources:

- Continued production from Member supplies serving their respective service areas. (Five Cascade Members have their own sources of groundwater or contracted surface water supply).
- Continued use of water from SPU under the 2004 Block Contract, as amended in 2008.
- Beginning in 2024, Cascade's initial use of Green River supply from the contract with TPU.
- Beginning in 2024, Cascade's initial use of additional Green River supply from Covington Water District's share in the Regional Water Supply System (RWSS)[1] over and above water used within the District's own service area. A contract between Cascade and the District is under discussion to make this supply available.
- Water from the Lake Tapps Project, to be developed in the future using Cascade's water rights for Lake Tapps and the White River (see Chapter 6). The exact timing of this source will depend on growth in demand and any future increases in contracted supplies from SPU, TPU, and Covington contracted supplies.

Additional flexibility in the supply portfolio will be developed, if needed, from alternative sources such as further enhanced conservation, reclaimed water, deep groundwater supplies, aquifer storage, and recovery projects within Member service areas. These sources are collectively referred to as "small sources" in the Cascade supply planning process.

These sources are described in greater detail in the subsections below.

As discussed in Section 4.4, demand conditions have shifted in the Puget Sound region in recent years. After decades of rapid growth in population and water needs, all of the regional water suppliers in the Central Puget Sound area have experienced flat or even reduced demands during the past several years. For supply planning, this means that the risk equation has changed; in the past, suppliers in the region faced the risk of growth outpacing supply but today an equally critical risk is that new water supply projects may be built too soon and burden ratepayers with unnecessary costs.

Since the region as a whole currently appears to have an excess of supply, Cascade will continue to seek partnerships among regional water suppliers to use existing supplies and infrastructure for as long as possible. SPU and TPU currently have supplies that exceed their

[1] The RWSS was formerly known as the Tacoma Second Supply Project, or TSSP.

existing and near-term forecasted demands. During 2010 and 2011, Cascade actively engaged with both of these regional suppliers to discuss possible expansions or extensions of existing supply contracts. While mutually-acceptable terms and conditions have not yet been identified, Cascade anticipates returning to these discussions periodically in the future. If regional demand remains flat or grows only slowly, it may be possible to delay some of the projects that Cascade has shown in its supply portfolio, thereby spreading costs over a longer time and reducing rate impacts to Cascade Members.

5.6.1. Member Independent Supplies

In order to provide a complete picture of the supplies serving Cascade Members, the preferred portfolio includes supplies owned and operated by five of the eight Cascade Members (the other three Members meet all of their drinking water needs with Cascade supplies). These include groundwater supplies owned by Covington Water District, the City of Issaquah, the City of Redmond, Sammamish Plateau Water and Sewer District, and Skyway Water and Sewer District, as well as a share in the RWSS held by Covington Water District. Information on Member independent supplies is provided in Section 2.4 of this TSP. The quantities of supply projected are based on Independent Supply Audits issued by Cascade in 2008.

For purposes of the TSP, Covington's RWSS supply is partly included in the Member independent supplies category and partly in a separate category. The portion of the RWSS included as Member independent supply is the quantity needed to exactly serve Covington's projected growth in demand over time. The remaining water available to Covington from its share of the RWSS is shown separately as a source of supply that Cascade can contract from Covington. Because of this approach, the Member independent supplies appear to grow over time, while the Covington RWSS surplus supply appears to decline over time as more and more of the RWSS water is needed for Covington's own service area.

Other Member-specific factors also contribute to the gradual growth in the total quantity of their independent supplies from 2011 to 2060, and these factors are documented in the supply audits. Taking these factors and the Covington considerations into account, the total quantity of independent supplies rises from approximately 12 mgd in 2011 to 17 mgd in 2060 on an annual average basis. Supplies available to meet maximum week needs rise from 25 mgd to 33 mgd during the same time period.

More information on Members' independent supplies and associated water rights can be found in the Members' individual water system plans.

5.6.2. SPU Contracted Supply

As described in Section 2.1 of this TSP, Cascade has a contract with SPU for regional water supply, which is delivered to seven of Cascade's eight Members. The sources of this supply are SPU impoundments and treatment facilities on the Cedar and Tolt Rivers. Existing supplies are provided under the "Block Contract" executed in 2004, which is attached as Appendix B. Water supply quantities available under the Block Contract vary over time and are shown in Table 2.1 (see Chapter 2). These quantities are also displayed in Figure 5.3.

While developing the TSP, Cascade held extensive discussions with SPU regarding possible expansion of the supply quantity available to Cascade, or extension of the current "block" for a longer time period. At this time, neither of these options has been negotiated on terms

satisfactory to both parties. However, it appears that SPU will have surplus supply from its regional water supply system for many decades into the future. Cascade anticipates there may be renewed discussion of Block Contract modifications in the future, with an aim toward mutually-beneficial outcomes that make the best use of existing supply infrastructure. Specifically, this could offer the opportunity to delay construction of Cascade's planned Tacoma-Cascade Pipeline (TCP) or Cascade's planned water treatment plant and pipeline for the Lake Tapps Project, or both.

5.6.3. TPU-contracted Supply

Cascade and TPU executed an agreement for the Sale of Wholesale Water in October 2005, attached as Appendix H. The contract includes a permanent component and a reserved (temporary) component, as shown in Table 5.4.

Table 5.4: Contracted Supply from TPU

Time Period	Permanent Supply* (mgd)		Reserved Supply (mgd)		Total Supply (mgd)	
	Average Day	Maximum Week	Average Day	Maximum Week	Average Day	Maximum Week
2008-2026	4.0	5.32	6.0	7.98	**10.0**	**13.3**
2027	4.0	5.32	4.0	5.32	**8.0**	**10.64**
2028	4.0	5.32	3.0	3.99	**7.0**	**9.31**
2029	4.0	5.32	2.0	2.66	**6.0**	**7.98**
2030	4.0	5.32	1.0	1.33	**5.0**	**6.65**
2031 and beyond	4.0	5.32	0.0	0.0	**4.0**	**5.32**

mgd = million gallons per day
* Under the contract with TPU, "permanent" means until the date that Tacoma ceases making wholesale water sales to any water systems that resell water to end users.

At the time the 2004 TSP was prepared, Cascade anticipated rapid growth in its service area and a need to begin using the Tacoma supply as early as 2010. Since that time, growth has slowed sharply in the region and the annual growth in water use by Cascade Members has flattened out. Therefore, this updated TSP anticipates use of the TPU supply beginning in 2024 when supply under the SPU Block Contract begins to decline.

While developing the updated TSP, Cascade held extensive discussions with TPU regarding possible changes in the quantity and terms for supply available to Cascade. At this time, changes have not been negotiated on terms satisfactory to both parties. However, it appears that TPU will have surplus supply from its regional water supply system for many decades into the future. Cascade anticipates there may be renewed discussion of TPU contract modifications in the future, with an aim toward mutually-beneficial outcomes that make the best use of existing supply infrastructure. Specifically, this could offer the opportunity to delay construction of Cascade's planned water treatment plant and pipeline for the Lake Tapps Project.

The existing contract includes a permanent component and a reserved (temporary) component. However, it also permits conversion of the reserved component to permanent status under

certain conditions. Currently, Cascade anticipates it will request conversion as permitted by the contract and that the necessary conditions will be fulfilled. These assumptions appear valid based on current information. Therefore, the portfolio chart shown in Figure 5.3 includes the conversion to permanent status. All of the TPU supply, whether reserved or permanent, is shown as a single block of supply.

The TPU contract permits Cascade to begin taking water deliveries from TPU at any time after October 2008. However, in order to use this supply, Cascade will need to construct a transmission pipeline from the RWSS pipeline north to the vicinity of SPU's Lake Youngs Reservoir (see Figure 7.1 in Chapter 7) and execute an agreement to convey water through SPU's water transmission system. (If an agreement cannot be negotiated, the pipeline would be built to Issaquah instead).

5.6.4. Four Cities Agreement

Cascade has an agreement with the Cities of Auburn, Bonney Lake, Buckley, and Sumner (collectively, the "Four Cities") regarding the availability of a portion of Cascade's TPU supply to meet these Cities' needs in the future. Each City has an allocation that it can purchase from Cascade. The total for all four cities combined is 4.54 mgd on an average day basis and 6.65 mgd on a maximum week basis. At this time, it is not certain how much of this allocation will actually be purchased by the Four Cities. Only Auburn and Bonney Lake have requested specific supplies from their allocation, and the Auburn request is for a temporary supply that would end in 2026. Since the quantities that will ultimately be needed are uncertain, the portfolio chart shown in Figure 5.3 assumes the Four Cities will use only 50 percent of their allocated amounts. This is reflected in a reduction in the TPU supply quantity available to Cascade (TPU supply available to Cascade is assumed to be reduced by 2.27 mgd on an average day basis and 3.33 mgd on a maximum week basis).

Cascade has also analyzed a scenario in which 100 percent of the Four Cities allocation is used by the cities. Under this scenario, Cascade will still have adequate supply, assuming the surplus supply shown as contracted from Covington Water District Cascade is available (see Section 5.6.5).

Cascade is not responsible for financing or constructing infrastructure needed for the Four Cities to access their allocations.

5.6.5. Covington Supply from RWSS

Covington Water District is a partner with TPU, the City of Kent, and Lakehaven Utility District in the Regional Water Supply System (RWSS) that delivers water from the Green River. Covington expects it will be many years before Covington fully utilizes this supply. In the interim, Covington has expressed willingness to allow Cascade to contract for Covington's surplus RWSS water for use by other Cascade Members. This water could be delivered to the other Members once the Tacoma-Cascade Pipeline is built.

Covington's share of the RWSS is 18.47 mgd on an instantaneous basis and 3,889 acre-feet annually. An agreement for Covington to supply Cascade with 5 mgd annual average and 7 mgd peak season is currently under discussion. The supply from this proposed agreement is included in the portfolio chart in Figure 5.3.

Based on Covington's forecasted water needs, Cascade anticipates that a larger quantity (up to 14 mgd) of Covington's surplus supply may be available for use by other Cascade Members to meet maximum week demands in 2024. This surplus will decline gradually to approximately 10 mgd by 2060 as Covington requires more of the water for customers within its own service area. Cascade anticipates continued discussion with Covington in future years regarding potential interim use of this surplus supply. For example, if the Four Cities require larger shares of their available allocation than currently anticipated, the additional Covington supply could be needed.

5.6.6. Lake Tapps Project

Cascade's White River - Lake Tapps Reservoir Project is described in detail in Chapter 6 of this TSP. Cascade acquired Lake Tapps for future use as a municipal water supply. Water rights issued in December 2010 authorize Cascade to produce 87.25 mgd as a maximum quantity and 48.5 mgd as an annual average for municipal supply deliveries. This water right augments Cascade's supplies to meet its Members' long-range supply needs and also provides the opportunity to improve reliability of water supplies for the Central Puget Sound region as a whole, particularly in the context of climate change concerns.

Water from Lake Tapps is not currently used for municipal supply. Cascade plans to develop the necessary water treatment and delivery infrastructure in phases over time. The first phase will include construction of a water transmission line and partial development of water treatment capacity. Additional water treatment capacity will then be developed in a later phase of construction. The portfolio chart in Figure 5.3 reflects these assumptions. It shows Phase 1 of the Lake Tapps Project completed in 2030 and Phase 2 in 2045.

However, the ultimate phasing of Lake Tapps Project development will respond to the timing of Cascade needs, as determined by actual growth in demand as well as any increases in other supplies over time. Cascade will likely seek opportunities to delay construction of both phases of the Lake Tapps Project to spread the costs of infrastructure development over a longer period of time. For example, if the Four Cities take less than their nominal allotment, which seems likely, then a larger share of Cascade's TPU contract supply will be available for use by Cascade. In addition, there may be opportunities to contract for additional supplies from both SPU and TPU in the future. These developments or lower growth in demand, or a combination of these factors, could delay the need for the Lake Tapps Project well beyond 2030.

For more information on the Lake Tapps Project, see Chapter 6.

5.6.7. Additional Supply Sources

Section 5.5 discussed considerations used in assembling a range of supply portfolios that led ultimately to the preferred portfolio. The following four small, potential sources appear potentially viable, yet are relatively small in terms of supply quantities available:

1. Reclaimed water from King County's Brightwater Treatment Plant

2. Aquifer storage and recovery (ASR) projects that could be developed within Cascade Member service areas

3. Deep groundwater supplies that can potentially be accessed by wells within Member service areas

4. Enhanced water conservation programs to reduce consumption beyond levels achieved by the water conservation program embedded in Cascade's demand forecast.

Each of these sources involves uncertainties and challenges for implementation. At the same time, the quantities of water available from these sources are highly flexible, and they can be developed more rapidly than large supplies requiring major infrastructure. While not directly included in the final preferred portfolio, Cascade views these sources as a menu of options that can provide additional flexibility if needed and can potentially be activated in the event demands rise more rapidly than expected at any point during the planning period.

Information on each of these sources is summarized below. Additional information can be found in the Technical Memorandum: *Supply Alternatives Assessment, Task 700* (December 2009).

- ***Reclaimed Water*.** Reclaimed water is recycled municipal or industrial wastewater that has been treated to meet rigorous standards for reuse defined under Washington State regulations. Reclaimed water can be used for a variety of non-potable purposes, such as irrigation and industrial supply. King County's new Brightwater Treatment Plant will produce reclaimed water, and King County has been seeking communities able to use the water. King County pipelines will provide capacity to convey reclaimed water to the Sammamish River Valley, which passes through or near the water service areas of four Members of Cascade: the City of Redmond, City of Kirkland, City of Bellevue, and Sammamish Plateau Water and Sewer District.

  Potential users of reclaimed water within those communities include parks, golf courses, and commercial sites with large irrigated landscapes. It is anticipated that reclaimed water supply from Brightwater to the Sammamish River Valley would be approximately 1.6 mgd on an average annual basis and 4.0 mgd during the summer irrigation season. Installation of local distribution piping would be needed to deliver the water from King County's pipeline to individual user sites.

  Other options also exist to use water from King County's South Treatment Plant in Tukwila (where some of it is already used) or other communities, and to construct satellite plants to produce reclaimed water in outlying areas such as the Covington Water District. Cascade's 2004 Transmission and Supply Plan included an analysis of potential customer sites within Cascade Member service areas. That information is reproduced in Appendix D.

  The primary obstacle to using reclaimed water in Cascade Member service areas is the cost of installing distribution mains. Reclaimed water distribution mains are often "redundant" in that they duplicate the function of water lines that deliver potable water supplies to the same customers. Since reclaimed water can be used only for limited purposes, and since the main use is irrigation that occurs only during the summer months, it is more costly on a per-unit basis to deliver reclaimed water than potable water. Despite these limitations, reclaimed water is viewed as a viable element of the "small sources" category for Cascade's future needs.

- ***Member ASR Projects*.** Western Washington typically receives abundant rainfall from November through June and experiences dry conditions from July through October. One way of managing water supplies in response to this natural pattern is to take water during the winter months and store it for the summer. Where geologic conditions are

favorable, one way to do this is to store the water in underground aquifers. Storing water in aquifers to be pumped and used later is called Aquifer Storage and Recovery (ASR). ASR is a relatively new approach to managing scarce water supplies.

One Cascade Member, Sammamish Plateau Water and Sewer District, has experimented with an ASR system. Another water system in King County, Lakehaven Utility District, has extensively studied ASR and plans to develop an ASR project known as OASIS. It is reasonable to expect that ASR could be viable in other areas within King County, including some additional locations within Cascade Member service areas. If suitable geologic conditions are present, the primary infrastructure requirement is installation of injection and recovery wells. (Sometimes existing supply wells can be retrofitted.) Substantial investigation is required to validate the feasibility of ASR at specific locations and to obtain the necessary permits.

The Supply Alternatives Assessment performed as part of the TSP project assumed that up to 11 mgd could be produced during the peak season using ASR within Member service areas (4.6 mgd annual average). This is based on extrapolation of the production quantity already developed in the Sammamish Plateau service area to the other seven Cascade Members. Water injected into aquifers could potentially come from one or a combination of sources such as SPU, TPU, and Lake Tapps. The viability of ASR in specific areas and the quantities that are feasible will require further study to demonstrate feasibility.

- ***Deep Ground Water Resources.*** The State of Washington has a series of regulations designed to protect streams and lakes from being depleted by new water uses. As a result, many surface water basins within the state are “closed” to further appropriations for municipal or other uses. New uses of groundwater are also difficult to get permitted, because pumping groundwater can reduce water available to streams and lakes.

  The Central Puget Sound region has a productive, deep aquifer zone lying 300 feet to 500 feet below sea level. This is considerably deeper than most existing wells in the region. However, wells drilled on the Sammamish Plateau, and historically in Kirkland, Bellevue, Seattle, and Tukwila have penetrated this deep aquifer zone. Sammamish Plateau WSD taps this aquifer in 3 of its 12 production wells and one of these was permitted as recently as 1998.

  Water flowing through this zone likely feeds Puget Sound directly, rather than supporting freshwater streams that require protection under State law. If this is correct, it is possible that Cascade Members could acquire State permits to utilize this deep aquifer zone. Further study would be needed to validate the concept. Where feasible and assuming permits are issued, wells could then be constructed at various locations within Cascade Member service areas.

  The Supply Alternatives Assessment performed as part of the TSP project assumed that up to 10 mgd could be produced during the peak season (8 mgd annual average) from wells distributed across the eight Member service areas.

- ***Enhanced Water Conservation.*** Cascade and its Members administer water conservation programs to assist their customers in using water more efficiently. Assumptions regarding continued implementation of water conservation are built into Cascade’s demand forecast, as detailed in Chapters 3 and 4 of this TSP. However, it

may be possible to achieve even larger reductions in water use, if more aggressive programs were implemented in the future. This element is based on the "Enhanced Conservation - 2" option from the technical memorandum titled *Supply Alternatives Assessment, Task 700* (December 2008). Under this option, three modifications would be made to the conservation assumptions built into the demand forecast:

1. Customers would be required to use the highest-efficiency plumbing equipment available, exceeding current (2010) State plumbing code requirements. This may occur from future actions by the state or federal government, or could be mandated by each local jurisdiction in the Cascade Member service areas.

2. There would be restrictions on landscape design and materials to limit the need for water and to improve efficiency of irrigation systems.

3. Metering requirements and rate structures would be modified to enhance customer incentives to save water. For example, this could include requirements for installation of irrigation meters, sub-metering at apartment complexes, and rate structures based on "water budgets."

The Supply Alternatives Assessment estimated that water saved by these actions could be up to 13 mgd during the peak season (8 mgd annual average), by full implementation at year 2060. This level of savings depends, in part, on the extent of population growth from 2010 to 2060.

Implementation of these enhanced conservation measures could not occur without actions taken by local governments within the Cascade Member service areas, and would be subject to considerable debate and discussion by the public. Therefore, there is considerable uncertainty regarding feasibility. However, it is likely that if needed, some degree of enhanced conservation savings above the levels built into the demand forecast could be achieved over the 50-year planning period.

Based on the assumptions used in the Supply Alternatives Analysis, all four small sources together could produce up to 38 mgd in the peak season (22 mgd annual average). However, there are considerable uncertainties associated with some of these sources and Cascade anticipates that actual, economically-viable production available from these supplies could be much lower, perhaps on the order of 20 to 30 percent of the nominal total. Cascade will continue to consider how use of one or more of the small sources could be combined with the preferred supply portfolio to provide increased flexibility in meeting water needs.

5.7. Supply Reliability

The preferred supply portfolio described in this chapter is expected to provide a high degree of reliability for Cascade and its Members. This is because the individual supply sources offer high reliability, plus the combination of multiple supplies will provide system redundancies in the event that one source becomes compromised due to emergency conditions.

5.7.1. Reliability of Future Cascade Supplies

Reliability characteristics of the individual Cascade supplies include the following:

- **Member supplies.** Five of the eight Cascade Members have independent supplies separate from Cascade's regional supply. Generally, these consist of groundwater sources. The Covington Water District also has access to a large surface water supply from the RWSS. These supplies and their reliability characteristics are described in the Members' respective water system plans. Groundwater supplies experience very different effects from surface water supplies under conditions that cause shortages. Moreover, local groundwater supplies do not depend on the extensive transmission system used for Cascade's existing surface water supply from SPU. It is very unlikely that emergency conditions would disrupt all of the groundwater sources for any one Member, let alone all five Members. Availability of the Member independent supplies, therefore, provides significant reliability benefits at least within the service areas of these five Members.
- **SPU Supply.** The SPU supply system includes two major surface water sources (Cedar and Tolt Rivers) in addition to a smaller groundwater resource. Treatment facilities and transmission pipelines deliver water to Cascade from both the Cedar and Tolt systems. SPU's 2007 Water System Plan discusses firm yield and supply reliability. The system can produce a firm yield of 171 mgd in 98 years out of 100. SPU's system-wide demand including Cascade and other wholesale customers has been less than 130 mgd over the past five years, meaning the likelihood of a source deficiency is extremely low. SPU has projected that future demands through at least 2060 will remain below firm yield (or beyond 2045 when accounting for high-end uncertainty in the SPU system-wide demand forecast). Cascade could be vulnerable to disruptions in SPU supply caused by emergency failures to SPU treatment facilities or transmission pipelines. SPU has contingency plans in place to repair damaged infrastructure. In addition, the SPU Water Shortage Contingency Plan and Cascade Shortage Management Plan are designed to enable both regional systems to respond appropriately in the event of a shortage caused by infrastructure failures.
- **TPU Supply.** Upon completion of the planned Tacoma-Cascade Pipeline (TCP), Cascade's regional supplies will be augmented by another major surface water source, TPU's Green River. This will further enhance reliability, both due to the source redundancy and the existence of separate treatment and transmission infrastructure. The addition of the TPU supply will coincide with reduction in supplies from SPU under the declining block structure of Cascade's supply agreement with SPU. This will greatly improve the diversity and balance of Cascade's supply, which is an important consideration in reliability.
- **Lake Tapps Supply.** Upon completion of the planned Lake Tapps Project, Cascade's regional supplies will again be augmented. As with the TPU supply, this will further enhance reliability by adding source redundancy and treatment and transmission infrastructure.

Even with a diverse and robust set of supplies, there will be risks of shortages due to a variety of events. As part of the supply source evaluation procedure described earlier in this chapter, Cascade carried out a risk assessment for the various sources and infrastructure elements included in the range of supply portfolios that were considered. The methods and results of this assessment are documented in the technical memorandum *Supply Portfolio Analysis* (June

2010). This included consideration of events that could impede development of Cascade's planned future supplies as well as events that could disrupt water supplies once they come on line. The risk assessment combined qualititative assessments of the probability and consequences of various events. Table 5.5 identifies the risk events that were considered to be the most significant, along with actions Cascade can take to mitigate negative consequences from these events.

Section 2-9 of this TSP discusses Cascade's Shortage Management Plan (see Appendix C) for supplies that currently provide municipal water supply to the Cascade service area. Whenever new supply sources are developed through implementation of the TSP, the SMP will be updated. In addition, Cascade has an Emergency Management Plan for Lake Tapps. At the time Cascade begins using Lake Tapps to provide municipal water supply, the Emergency Management Plan will also be updated to reflect the new use of this facility.

5.7.2. Enhancement of Reliability in the Central Puget Sound Region

Implementation of the TSP offers the potential to improve the reliability of other regional water systems besides Cascade. For example, construction of either the planned Tacoma-Cascade Pipeline (TSP) or the Lake Tapps Pipeline (LTP) could enhance reliability of both the SPU and TPU regional systems if desired. The north-south pipelines associated with either of these projects could potentially provide interties linking the SPU and TPU supply systems and allowing water to flow from one regional system to another in the event of emergency disruptions to the SPU or TPU systems. Cascade will continue to engage SPU and TPU on this opportunity in future years when Cascade begins to develop final designs for these pipelines.

In addition, when the Lake Tapps Project is completed, this will add a significant new source of water supply to the region. If connections are constructed among Cascade, TPU, and SPU that permit this water to be used regionally, either on a regular or emergency basis, it would help provide insurance against the possible effects of climate change on regional supply reliability.

Table 5.5: Risk Events and Mitigation Actions for High-scoring Risks

Supply/Feature	Risk Event	Mitigation
Broad Portfolio Risks or Mitigation (cross-cutting)		
All Surface Sources	Future federal water treatment standards become more stringent.	Monitor potential changes pending. Anticipate needs when new treatment plants are built.
Tacoma Supply		
Tacoma-Cascade Pipeline (or Lake Tapps Pipeline north of Tacoma SSP)	ROW acquisition problems, franchise, easements etc.	Lock up ROW with development conditions.
	Urban development complicates pipeline construction.	Lock up ROW with development conditions.
	Permitting or construction challenges delay construction and increase complexity	Long lead time for pipeline project.
	Damage due to seismic event.*	Intertie with other utilities to have emergency supplies.
Lake Tapps Supply		
Lake Tapps source	Regulatory risk on water right issuance.	Effective communication of regional value of the project (already done).
	Seismic impacts affect dikes or other facilities.	Prioritized rehabilitation of vulnerable facilities.
	Volcanic mud flow (lahar) damages White River facilities.	Contingency plan for short- or long-term replacement supply.
	USACOE does not maintain facilities as planned. *	Monitor Corps activities. Legal action if not compliant with agreements.
Lake Tapps Pipeline (portion south of Tacoma SSP)	ROW acquisition problems.	Lock up ROW with development conditions.
	Urban development complicates pipeline construction.	Lock up ROW with development conditions.
	Permitting or construction challenges delay construction	Long lead time for pipeline project.
	Damage due to seismic event or other disaster. *	Intertie with other utilities to have emergency supplies.
Other Cascade Facilities		
Cascade BKR pipeline	ROW acquisition problems (note alternative configurations)	Lock up ROW with development conditions. Or acquire ESSL.
	Urban development complicates pipeline construction.	Lock up ROW with development conditions. Or acquire ESSL.
	Permitting or construction challenges delay construction	Long lead time for pipeline project.
SPU Supplies (Existing Block Contract)		
SPU Transmission system	Aging pipelines deteriorate or fail.	Encourage replacement by SPU, or acquire lines and carry out replacement.
	Damage due to Seismic Event	Intertie with Tacoma for emergency supply.

* Included in summary due to relatively high severity score (low probability but high severity)

Appendix O

Well Susceptibility Forms

This page intentionally left blank.

GROUND WATER CONTAMINATION
Susceptibility Assessment Survey Form

SAMMAMISH PLATEAU WATER & SEWER DISTRICT
1510 228th Avenue S.E.
Issaquah, Washington 98027

WELL NO. 1

GROUND WATER CONTAMINATION
Susceptibility Assessment Survey Form

TABLE OF CONTENTS

- Susceptibility Assessment Survey Form
- Sammamish Plateau Wells 1 WHPA Capture Zones
- Well 1R Asbuilt
- Well 1R WHPA Zones - FYI
- Well Log
- Well 1 Replacement - Construction and Testing Report
- Water Facilities Inventory Form
- Inorganic Chemical Analysis 1989 - 1993

Ground Water Contamination
Susceptibility Assessment Survey Form
Version 2.1

IMPORTANT! Please complete one form for each ground water source (well, wellfield, spring) used in your water system. Photocopy as necessary.

PART I: System Information

Well owner/manager : SAMMAMISH PLATEAU WATER + SEWER DISTRICT

Water system name : SAMMAMISH PLATEAU WATER + SEWER DISTRICT

County: KING

Water system number: 409009 Source number: 501

Well depth: 154 (ft.) (*From WFI form*)

Source name: WELL 1

WA well identification tag number: ___ ___ ___-___ ___ ___

✓ well not tagged

Number of connections: 9000 Population served: 26,000

Township: 24 N Range: 06E

Section: 10 1/4 1/4 Section: SW/NE

Latitude/longitude (if available): _____/_____

How was lat./long. determined?

_____ global positioning device _____ survey _____ topographic map
____other: _____

* Please refer to Assistance Packet for details and explanations of all questions in Parts II through V.

PART II: Well Construction and Source Information

1) Date well originally constructed: 7 / 8 / 54 month/day/year

last reconstruction: 3 / 13 / 84 month/day/year

_____ information unavailable

5/1954 3/1984

2) Well driller: H.O. MEYER Co. ARMSTRONG DRILL.

Rt. 4, Box 17 10715 66TH AVE E

KIRKLAND, WA. PUYALLUP, WA.

___ well driller unknown

3) Type of well:

✓ Drilled: ___ rotary ___ bored ✓ cable (percussion) ___ Dug

___ Other: ___ spring(s) ___ lateral collector (Ranney)

___ driven ___ jetted ___ other: _____

Additional comments: _____

4) Well report available? X YES (attach copy to form) ___ NO

If no well log is available, please attach any other records documenting well construction; e.g. boring logs, "as built" sheets, engineering reports, well reconstruction logs.

5) Average pumping rate: 500 (gallons/min)

Source of information: WATER FACILITIES INVENTORY

If not documented, how was pumping rate determined? _____

___ Pumping rate unknown

6) Is this source treated? No

If so, what type of treatment:

___ disinfection ___ filtration ___ carbon filter ___ air stripper ___ other

Purpose of treatment (describe materials to be removed or controlled by treatment):

7) If source is chlorinated, is a chlorine residual maintained: ___ YES ___ NO N/A

Residual level: _____ *(At the point closest to the source.)*

PART III: Hydrogeologic Information

1) Depth to top of open interval: [check one]

___ < 20 ft ___ 20–50 ft ___ 50–100 ft X 100–200 ft ___ > 200 ft

___ information unavailable ('< ' *means less than;* '> ' *means greater than*)

2) Depth to ground water (static water level):

___ < 20 ft ___ 20–50 ft ___ 50–100 ft X > 100 ft

___ flowing well/spring (artesian)

How was water level determined?

X well log ___ other: _____

___ depth to ground water unknown

3) If source is a flowing well or spring, what is the confining pressure: N/A

_____ psi (pounds per square inch)
or
_____ feet above wellhead

4) If source is a flowing well or spring, is there a surface impoundment, reservoir, or catchment associated with this source: ___ YES ___ NO N/A

5) Wellhead elevation (height above mean sea level): 465 (ft)

How was elevation determined? ___ topographic map ___ Drilling/Well Log ___ altimeter

___ other: CONSTRUCTION / TESTING REPORT

___ information unavailable

6) Confining layers: (This can be completed only for those sources with a drilling log, well log or geologic report describing subsurface conditions. Please refer to assistance package for example.)

X evidence of a confining layer in well log

___ no evidence of a confining layer in well log

If there is evidence of a confining layer, is the depth to ground water more than 20 feet above the ~~top of the open interval~~ bottom of the lowest confining layer? ___ YES X NO

___ information unavailable

7) Sanitary setback:

___ < 100 ft* X 100–120 ft ___ 120–200 ft ___ > 200 ft
* if less than 100 ft describe the site conditions:

8) Wellhead construction:

X wellhead enclosed in a wellhouse

X controlled access (describe): Fenced + Gated

___ other uses for wellhouse (describe): ___

___ no wellhead control

9) Surface seal:

___ 18 ft

___ < 18 ft (no Department of Ecology approval) ('<' *means less than*)

___ < 18 ft (Approved by Ecology, include documentation) ('<' *means less than*)

X > 18 ft ('>' *means greater than*)

___ depth of seal unknown

___ no surface seal

10) Annual rainfall (inches per year):

___ < 10 in/yr ___ 10–25 in/yr X > 25 in/yr

PART IV: Mapping Your Ground Water Resource

1) Annual volume of water pumped: 81,388,000 (gallons)

How was this determined?

X meter

___ estimated: ___ pumping rate (_____)

___ pump capacity (_____)

___ other: _____

2) "Calculated Fixed Radius" estimate of ground water movement:
(see Instruction Packet)

6 month ground water travel time : 980 (ft)

1 year ground water travel time : 1390 (ft)

5 year ground water travel time: 3110 (ft)

10 year ground water travel time: 4400 (ft)

These are the CFR's per this packet. The District has additional WHPA Capture Zone information for this well, which is attached. The following questions are answered for the capture zones identified on the WHP map.

Information available on length of screened/open interval?

X YES ___ NO

Length of screened/open interval: 10 (ft)

3) Is there a river, lake, pond, stream, or other obvious surface water body within the 6 month time of travel boundary? ___ YES X NO (mark and identify on map).

4) Is there a stormwater and/or wastewater facility, treatment lagoon, or holding pond located within the 6 month time of travel boundary? ___ YES X NO (mark and identify on map).

Comments: _____

PART V: Assessment of Water Quality

1) Regional sources of risk to ground water:

Please indicate if any of the following are present within a circular area around your water source having a radius up to and including the five year ground water travel time:

	6 month	1 year	5 year	unknown
likely pesticide application		/	/	
stormwater injection wells	no	No	No	
other injection wells * see comments	No	No	No	
abandoned ground water well				/
landfills, dumps, disposal areas				/
known hazardous materials clean-up site				/
water system(s) with known quality problems				/
population density > 1 house/acre	no	yes	yes	
residences commonly have septic tanks	/	/	/	
Wastewater treatment lagoons	No	No	No	
sites used for land application of waste	No	No	No	

Mark and identify on map any of the risks listed above which are located within the 6 month time of travel boundary? (*Please include a map of the wellhead and time of travel areas with this form. Please locate and mark any of the following.*)

If other recorded or potential sources of ground water contamination exist within the ten year time of travel circular zone around your water supply, please describe:

*Well 1R has been used as an injection well as part of a groundwater recharge project, with drinking quality water.

2) Source specific water quality records:

Please indicate the occurrence of any test results since 1986 that meet the following conditions: (Unless listed on assessment, MCLs are listed in assistance package.)

A. Nitrate: (Nitrate MCL = 10 mg/l)	YES	NO
Results greater than MCL	___	X
< 2 mg/liter nitrate	X	___
2-5 mg/liter nitrate	___	X
> 5 mg/liter nitrate	___	X
___ Nitrate sampling records unavailable		

B. VOCs: (VOC detection level 0.5 ug/l or 0.0005 mg/l.)	YES	NO
Results greater than MCL or SAL	___	X
VOCs detected at least once	___	X
VOCs never detected	X	___
___ VOC sampling records unavailable		

C. EDB/DBCP:	YES	NO
(EDB MCL = 0.05 ug/l or 0.00005 mg/l. DBCP MCL = 0.2 ug/l or 0.0002 mg/l.)		
EDB/DBCP detected below MCL at least once	___	___
EDB/DBCP detected above MCL at least once	___	___
EDB/DBCP never detected	___	___
___ EDB/DBCP tests required but not yet completed		
X EDB/DBCP tests not required		

D. Other SOCs (Pesticides):	YES	NO
Other SOCs detected	___	___
(pesticides and other synthetic organic chemicals)		

___ Other SOC tests performed but none detected
(list test methods in comments
X Other SOC tests not performed

If any SOCs in addition to EDB/DBCP were detected, please identify and date. If other SOC tests were performed, but no SOCs detected, list test methods here: _____

_____

_____

_____

E. Bacterial contamination:

	YES	NO
Any bacterial detection(s) in the past 3 years in samples taken from the source (not distribution sampling records).	___	X
Has source (in past 3 years) had a bacteriological contamination problem found in distribution samples that was attributed to the source.	___	X

___ Source sampling records for bacteria unavailable

Part VI: Geographic or Hydrologic Factors Contributing to a Non-Circular Zone of Contribution

The following questions will help identify those ground water systems which may not be accurately represented by the calculated fixed radius (CFR) method described in Part IV. For these sources, the CFR areas should be used as a preliminary delineation of the critical time of travel zones for that source. As a system develops its Wellhead Protection Plan for theses sources, a more detailed delineation method should be considered.

1) Is there evidence of obvious hydrologic boundaries within the 10 year time of travel zone of the CFR? (Does the largest circle extend over a stream, river, lake, up a steep hillside, and/or over a mountain or ridge?)

X YES ___ NO

Describe with references to map produced in Part IV:
THERE ARE STREAMS FLOWING INTO AND OUT OF LAUGHING JACOBS LAKE, AND THE LAKE ITSELF IS IN THE FIVE YEAR BOUNDARY. THE TEN YEAR BOUNDARY INCLUDES A PORTION OF YELLOW LAKE. THERE IS A STEEP RAVINE ASSOCIATED WITH THE SOUTHWESTERN EDGE OF THE FIVE AND TEN YEAR BOUNDARIES

2) Aquifer Material:

A) Does the drilling log, well log or other geologic/engineering reports identify that the well is located in an area where the underground conditions are identified as fractured rock and/or basalt terrain?

___ YES X NO

B) Does the drilling log, well log or other geologic/engineering reports indicate that the well is located in an area where the underground conditions are primarily identified as coarse sand and gravel?

X YES ___ NO

3) Is the source located in an aquifer with a high horizontal flow rate? (These can include sources located on flood plains of large rivers, artesian wells with high water pressure, and/or shallow flowing wells and springs.)

__ YES X NO

4) Are there other high capacity wells (agricultural, municipal and/or industrial) located within the CFRs? No

a) Presence of ground water extraction wells removing more than approximately 500 gal/min within...

	YES	NO	unknown
< 6 month travel time	__	X	__
6 month–1 year travel time	__	X	__
1–5 year travel time	__	X	__
5–10 year travel time	__	X	__

b) Presence of ground water recharge wells (dry wells) or heavy irrigation within...

	YES	NO	unknown
< 1 year travel time *	__	X	__
1–5 year travel time	__	X	__
5–10 year travel time	__	X	__

Please identify or describe additional hydrologic or geographic conditions that you believe may affect the shape of the zone of contribution for this source. Where possible, reference them to locations on the map produced in Part IV.

* Well 1R has been used as an injection well as part of a groundwater recharge project, with drinking quality water.

Suggestions and Comments

Did you attend one of the susceptibility workshops? X YES ___ NO

Did you find it useful? X YES ___ NO

Did you seek outside assistance to complete the assessment? X YES ___ NO

This form and instruction packet are still in the process of development. Your comments, suggestions and questions will help us upgrade and improve this assessment form. If you found particular sections confusing or problematic please let us know. How could this susceptibility assessment be improved or made clearer? Did the instruction package help you find the information needed to complete the assessment? How much time did it take you to complete the form? Were you able to complete the assessment without additional/outside expertise? Do you feel the assessment was valuable as a learning experience? Any other comments or constructive criticisms you have would be appreciated.

Be more specific on the CFR vs. WHPA travel — to indicate that WHPA information can be used, if available.

Well 1

SAMMAMISH PLATEAU WELLS 1R & 2
WHPA CAPTURE ZONES

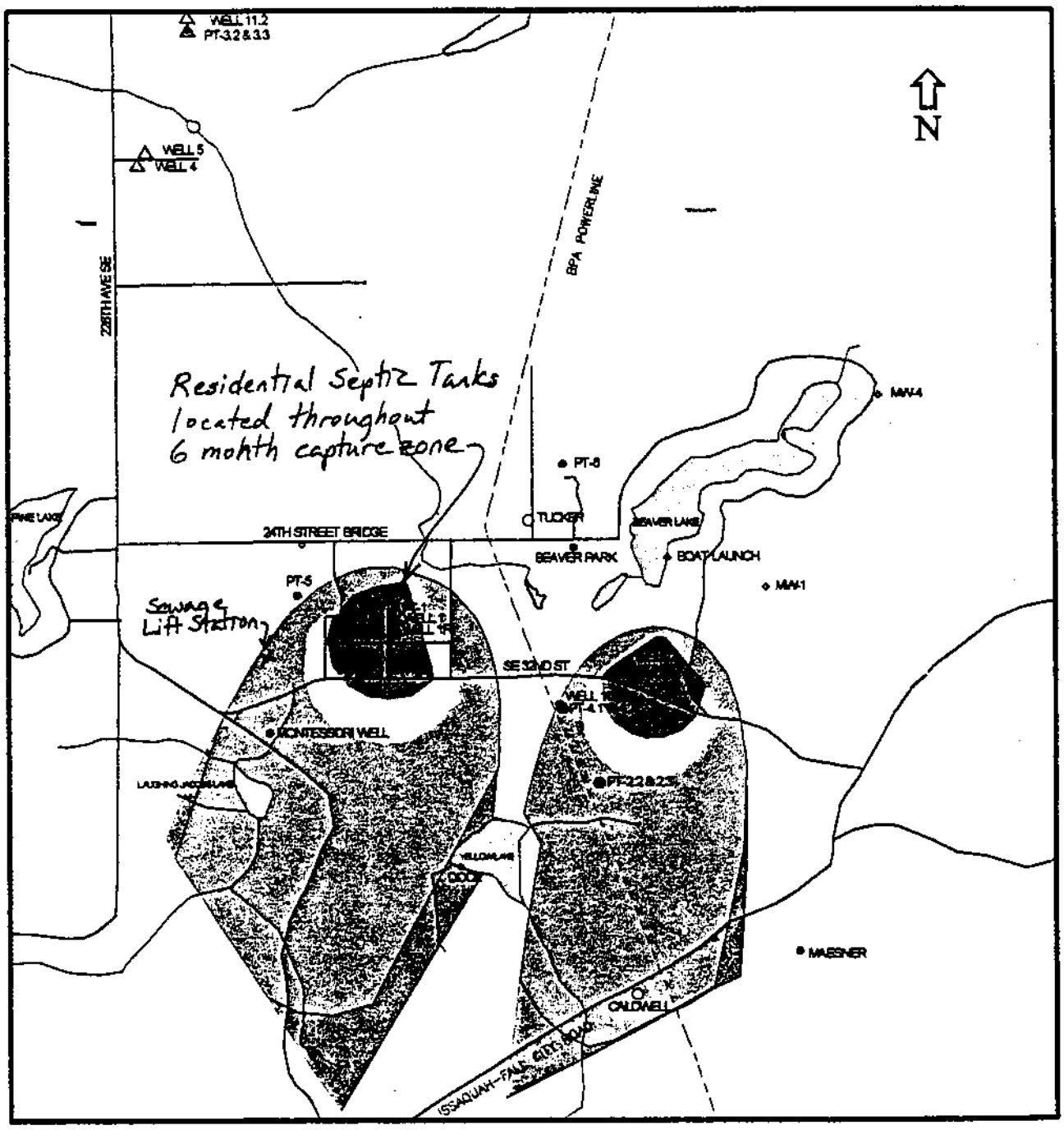

SYMBOL KEY:

- ◇ ZONE I AND SURFACE WATER MONITORING STATIONS
- ○ ZONE IIa MONITORING WELL
- ● ZONE IIb MONITORING WELL
- △ ZONE IV MONITORING WELL

- 6-month capture zone
- 1-year capture zone
- 5-year capture zone
- 10-year capture zone

SCALE (MILES)

0 1/4 1/2 1

KING CC .TY WATER DISTRICT #82 W - 1-R

ELEV. 465'

DEPTH IN FT.

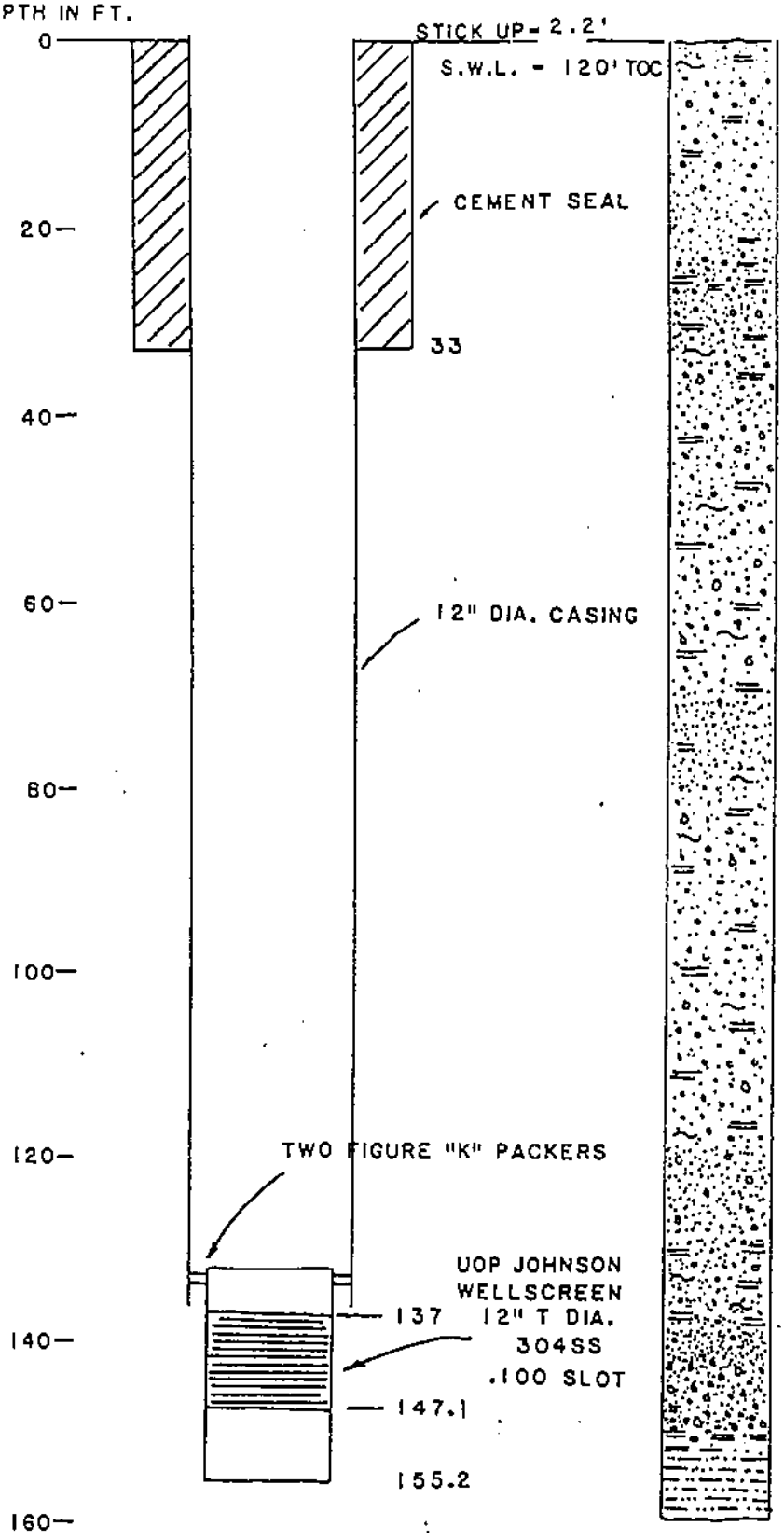

0-3 TOPSOIL,BROWN SAND,GRAVEL, COBBLES,CLAY,SILT

3-17 GRAVEL,BROWN SAND,CLAY

17-23 BROWN SAND,GRAVEL,CLAY

23-25 GRAVEL,SAND,CLAY

25-27 GRAVEL,SANO,CLAY LAYERS

27-70 GRAVEL,SAND,COBBLES,GREY CLAY MINOR SILT

70-80 SAND,GRAVEL,GREY CLAY,MINOR SILT

80-118 PARTIALLY CEMENTED GRAVEL & SANO,GREY CLAY,SOME COBBLES, MINOR SILT

118-128 SAND,GRAVEL,COBBLES,CLEAN WATER BEARING

128-138 SAND,GRAVEL,COBBLES, CLAY,SILT,DIRTY

138-143 SAND,GRAVEL,MINOR CLAY, SILT,CLEAN

143-149 GRAVEL,SAND,COBBLES,CLEAN

149-150 GRAVEL,SAND,BLUE CLAY LAYERS

150-159 BLUE CLAY,SILT,SAND

T.D. 159'

J.R.CARR/ASSOC.

Not Used - Provided FYI only. See WHPA Zones.

Sammamish Plateau Water & Sewer District
Well 1R

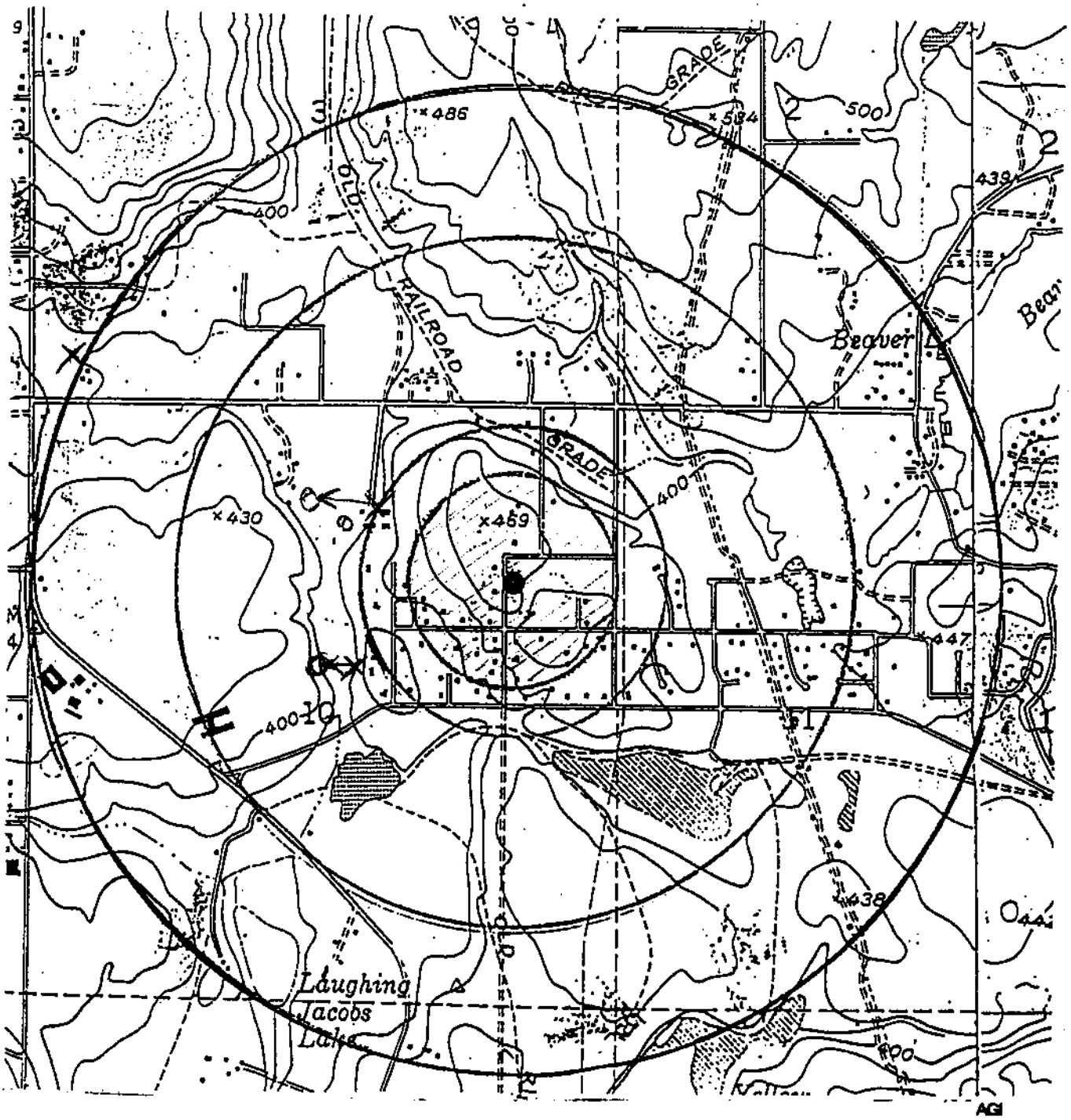

LEGEND

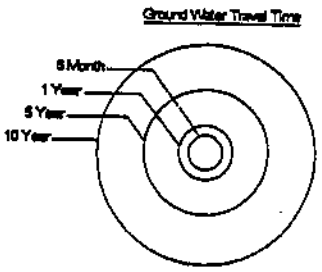

X - SEWER LIFT STATION

▨ - SEPTIC TANKS

SCALE (FT)

0 1000 2000 3000 4000 5000

DEPARTMENT OF CONSERVATION AND DEVELOPMENT

WELL LOG

No. ...../.....

Date June 8, 1964

Record by Driller

Source Driller's Record

Location: State of WASHINGTON

County King

Area

Map

NW ¼ SE ¼ NE ¼ sec. 10 T. 24 N., R. 6 E., E. W.

Diagram of Section

Drilling Co. Ho. O. Meyer Drilling Co.

Address Route 4, Box 17, Kirkland, Washington

Method of Drilling ..... Date July 8, 1954

Owner Harold Hestnes

Address 603 Jones Bldg., Seattle 1, Washington

Land surface, datum ..... ft. above/below

Coordination	Material	Thickness (feet)	Depth (feet)
	(Transcribe driller's terminology literally but paraphrase as necessary. In parentheses, if material water-bearing, so state and record static level if reported. Give depths in feet below land-surface datum unless otherwise indicated. Correlate with stratigraphic column, if feasible. Following log of materials, list all casings, perforations, screens, etc.)		
	Community domestic supply		
	Top soil	3	3
	Yellow hardpan	13	16
	Grey hardpan	8	24
	Gravel & sand, some sed.water	4	28
	Hardpan & coarse gravel	12	40
	Hardpan 50% solids	15	55
	Hardpan with course gravel and boulders	5	60
	Yellow clay and sand	3	63
	Hardpan and sm. gravel	7	70
	Gravel, sand with some sed, some water	5	75
	Red gravel, sand, very little Sediment	5	80
	Gravel & sand, hardpan	5	85
	Dry gravel & sand	5	90
	Coarse sand & med. gravel	10	100
	Coarse sand & coarse gravel	2	102
	Very coarse gravel, up to 6 and 6" dia.	2	104
	Some sed. in coarse gravel and sand	7	111
	Loose coarse gravel & sand	6	117
	Top of water 117'		
	Loose sand & med. coarse gr.	3	120
	Med. coarse sand & water	10	130
	Gravel up to 5" dia. med. coarse sand	6	136
	Test bailed at 50 gpm at 136'		
	Coarse gravel & sand; some rocks had to be broken	4	140
	Very coarse gravel, med. sand	2	142
	Med. grade sand & gravel	5	147
	Thin layer hardpan, med. sand and gravel	3	150
	Blue clay and silt	4	154
	Casing: 12" from 0 to 138'		
	Screened from 138 to 150'		
	SWL: 111'6"		
	Yields 320 gpm with 8' DD after 12 hours		
	400 gpm with 11' DD after 12 hours		
	650 gpm with 16' DD after 12 hours		
	August 5 & 6, 1954		

Sheet ..... of ..... sheets

S. F. No. 7449—OS—6-61—2M.

24/6E-10H

WELL 1

Sec. 11-16

J.R. CARR / ASSOCIATES
CONSULTING HYDROGEOLOGISTS

KING COUNTY WATER DISTRICT #82
WELL #1 - REPLACEMENT
CONSTRUCTION AND TESTING

June 1, 1984

SUMMARY

- The decision to replace Well I was based on inefficiency which when coupled with a declining water level during summer months reduced its yield to about 200 gpm.

- Well 1 - Replacement (1-R) is capable of sustaining a safe yield of 425 gpm with a specific capacity Q/S = 50 gpm/ft - drawdown.

- Water quality from Well 1-R is excellent.

- Well 1-R has a 50% greater specific capacity than Well 1.

(206) 851-5562 P.O. BOX 1158, GIG HARBOR, WA. 98335

I CONSTRUCTION AND TESTING

Well 1-R is located approximately 16 ft. southeast of Well 1 in the SE1/4 of the NE1/4 of Section 10 T24N R6E.

The contract for drilling was awarded to the low bidder, Armstrong Drilling of Puyallup, Washington. All drilling, construction and testing was done with a 72 Speed Star cable tool drill rig. Drilling for Well 1-R began February 23, 1984 and continued to a depth of 159 ft. with 12-inch diameter casing. See Figure 1 for geologic log.

The aquifer, penetrated from 118-149 ft. consists of sand, gravel, and cobbles with minor amounts of clay and silt from 128-138 ft. After sieve analysis of the aquifer samples, screen design was prepared and on March 8 the screen assembly was lowered into the well. Design of the screen assembly is shown in Figure 1. The 12-inch casing was extracted to 137 ft. to expose the screen. After pulling the casing the top of the packer assembly was measured at a depth of 132.1 ft. below ground surface, placing the screened interval at 137-147.1 ft. below ground surface.

A cement surface seal was placed into the annulus between the 16-inch diameter surface casing and the 12-inch diameter pipe, providing a 4 inch annular seal from ground surface to a depth of 33 ft. Initial static water level was 117.8 ft. below ground surface.

Development, using a surge block and bailer, initially produced several feet of sand in the bottom of the well, which after 8 hours development was reduced to a virtually sand-free condition. After development the static water level was 117.8 ft. below ground surface. On March 13, 1984, a 5-inch diameter line-shaft turbine test pump was installed with the intake at 136 ft. Discharge was to the east into a swampy lowland area. Preliminary

testing resulted in the flow rates and corresponding capacities shown below:

Q = 300 gpm	Q/S = 71 gpm/ft-drawdown
Q = 400 gpm	Q/S = 67 gpm/ft-drawdown
Q = 500 gpm	Q/S = 59 gpm/ft-drawdown
Q = 600 gpm	Q/S = 53 gpm/ft-drawdown
Q = 747 gpm	Q/S = 47 gpm/ft-drawdown

These values are approximate as stabilization of the water level was not achieved for each pumping rate. Initial backwashing produced approximately 10 grains/liter of sand.

On March 14, a 6 hour test was run at a flow rate of Q = 610 gpm. The original Well 1, 16 ft. to the northwest, was used as an observation well during testing. Results of the 6-hour test are shown in Figures 2 and 3. After 6 hours the drawdown in the pumping well was 12.2 ft. for a specific capacity Q/S = 50 gpm/ft-drawdown. Drawdown is plotted for the pumping and observation wells in Figure 2. As indicated, aquifer transmissivities of T = 375,000 gpd/ft. and T = 460,000 gpd/ft. were calculated for the pumping and observation wells respectively. Recovery is plotted for the observation well in Figure 3. This data indicates an aquifer transmissivity of T = 413,000 gpd/ft. Using this value a storage coefficient of S = 0.0003 was calculated indicating confined aquifer conditions.

II WATER QUALITY

Water quality data for Well 1-R is presented on page 10. Results of the analysis by W.M.A. Laboratory meet all D.S.H.S. standards. As reported, the nitrate concentration N = 1.6 mg/L is higher than previously reported values for Well 1 of 0.79 mg/L (7/25/83) and 0.3 mg/L (8/3/76). A water sample should be analyzed for nitrate in early August 1984 to determine if the nitrate concentration is seasonally variable. Quarterly analysis for nitrate of the water should be done to evaluate the water quality trend.

III SAFE YIELD

SAFE YIELD = SAFE DRAWDOWN x SPECIFIC CAPACITY

Maximum drawdown level	137 ft.	(Top of Screen)
Static water level	118 ft.	(Ground surface 3/14/84)
Total Available Drawdown	19 ft.	

Less Allowances For:

Seasonal fluctuations	6 ft.	(Estimated from Figure 4)
Total	6 ft.	

Useable Drawdown = 19 - 6 = 13 ft.

Available Yield = Useable Drawdown x Specific Capacity

= 13 ft. x 50 gpm/ft-drawdown

= **650 gpm**

A safety factor of 50% or more is desirable as it allows for unforeseen or unpredictable fluctuations in the water table and promotes longer well life.

Using a Safe Drawdown = 8.5 ft., gives a Safety Factor =

$$\frac{\text{useable drawdown - safe drawdown}}{\text{safe drawdown}}$$

$$= \frac{13 \text{ ft.} - 8.5 \text{ ft.}}{8.5 \text{ ft.}}$$

$$= 53\%$$

SAFE YIELD = SAFE DRAWDOWN x SPECIFIC CAPACITY

SAFE YIELD = 8.5 ft. x 50 gpm/ft-drawdown

= **425 gpm**

IV RECOMMENDATIONS

- Well 1-R should be pumped at a maximum rate of 425 gpm, with the pump bowls at 137 ft. below ground surface, and 8-inch suction pipe to a depth of 151 ft.

- Water levels and corresponding production rates should be monitored closely with special attention in July and August as higher production rates lower the water level.

- Annual withdrawal from this aquifer should be reduced, with planned reductions during late summer and fall.

- Water quality should be monitored quarterly to establish seasonal fluctuations of nitrate and other indicators of potential contamination.

Prepared by:

J.R. CARR/ASSOCIATES

T. L. Mogg

J. R. Carr

TLM/JRC/vg

KING COUNTY WATER DISTRICT #82 WELL 1-R FIGURE 1

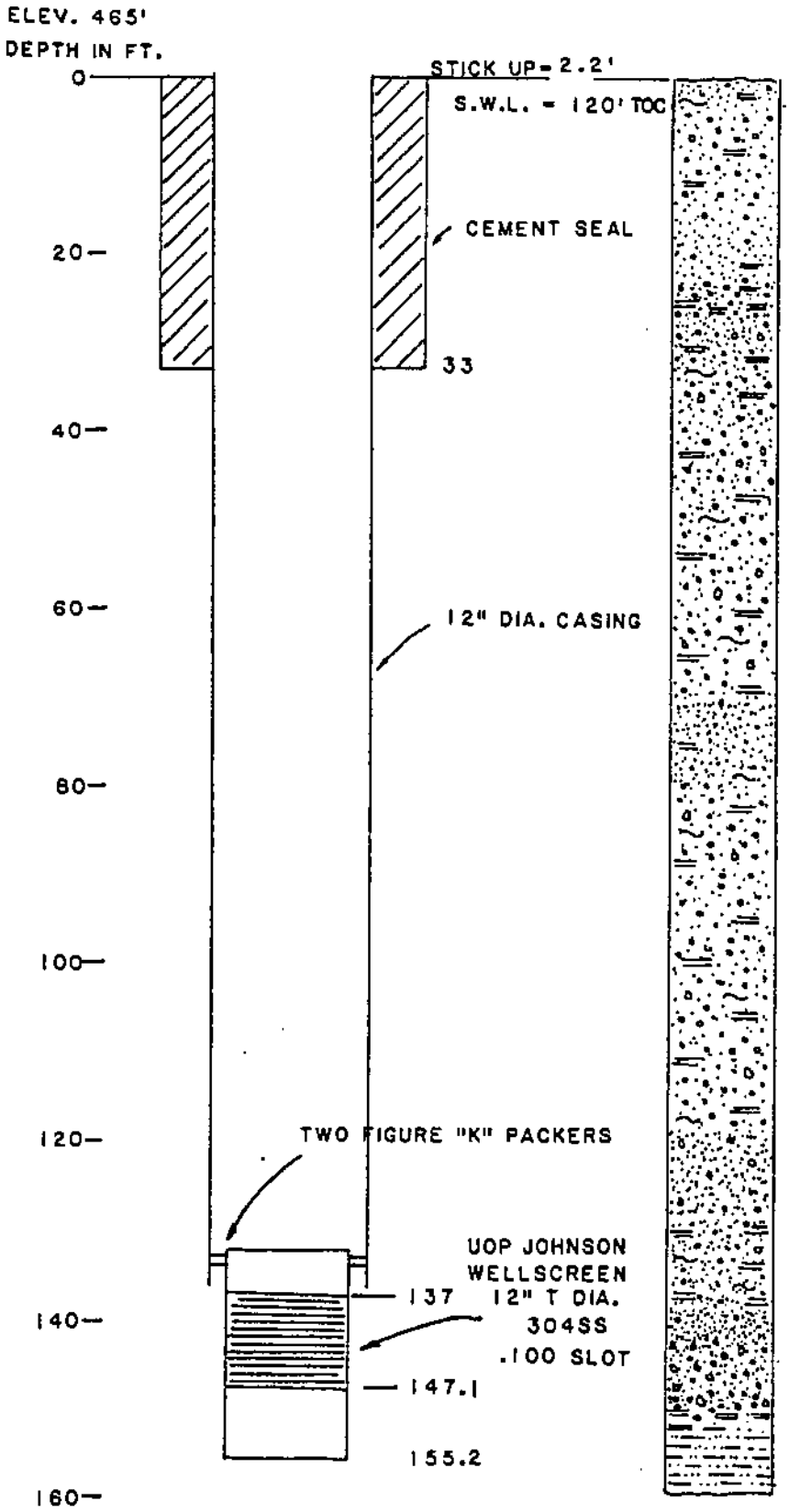

0-3 TOPSOIL, BROWN SAND, GRAVEL, COBBLES, CLAY, SILT
3-17 GRAVEL, BROWN SAND, CLAY

17-23 BROWN SAND, GRAVEL, CLAY

23-25 GRAVEL, SAND, CLAY
25-27 GRAVEL, SAND, CLAY LAYERS
27-70 GRAVEL, SAND, COBBLES, GREY CLAY MINOR SILT

70-80 SAND, GRAVEL, GREY CLAY, MINOR SIL.

80-118 PARTIALLY CEMENTED GRAVEL & SAND, GREY CLAY, SOME COBBLES MINOR SILT

118-128 SAND, GRAVEL, COBBLES, CLEAN WATER BEARING

128-138 SAND, GRAVEL, COBBLES, CLAY, SILT, DIRTY

138-143 SAND, GRAVEL, MINOR CLAY, SILT, CLEAN
143-149 GRAVEL, SAND, COBBLES, CLEAN

149-150 GRAVEL, SAND, BLUE CLAY LAYERS
150-159 BLUE CLAY, SILT, SAND

T.D. 159'

J.R.CARR/ASSOC.

SEMI-LOGARITHMIC 46 5507
KEUFFEL & ESSER CO.

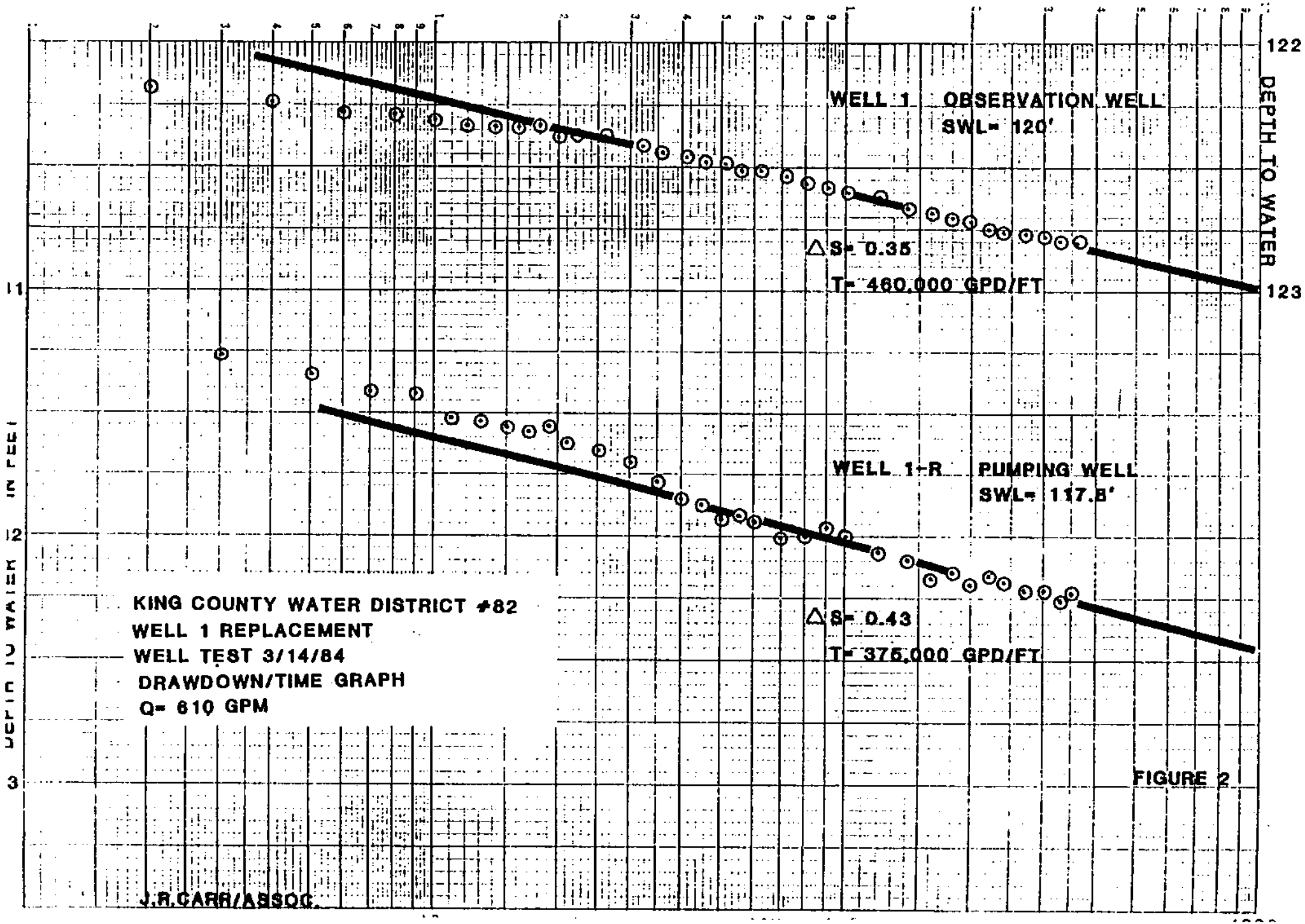

FIGURE 2

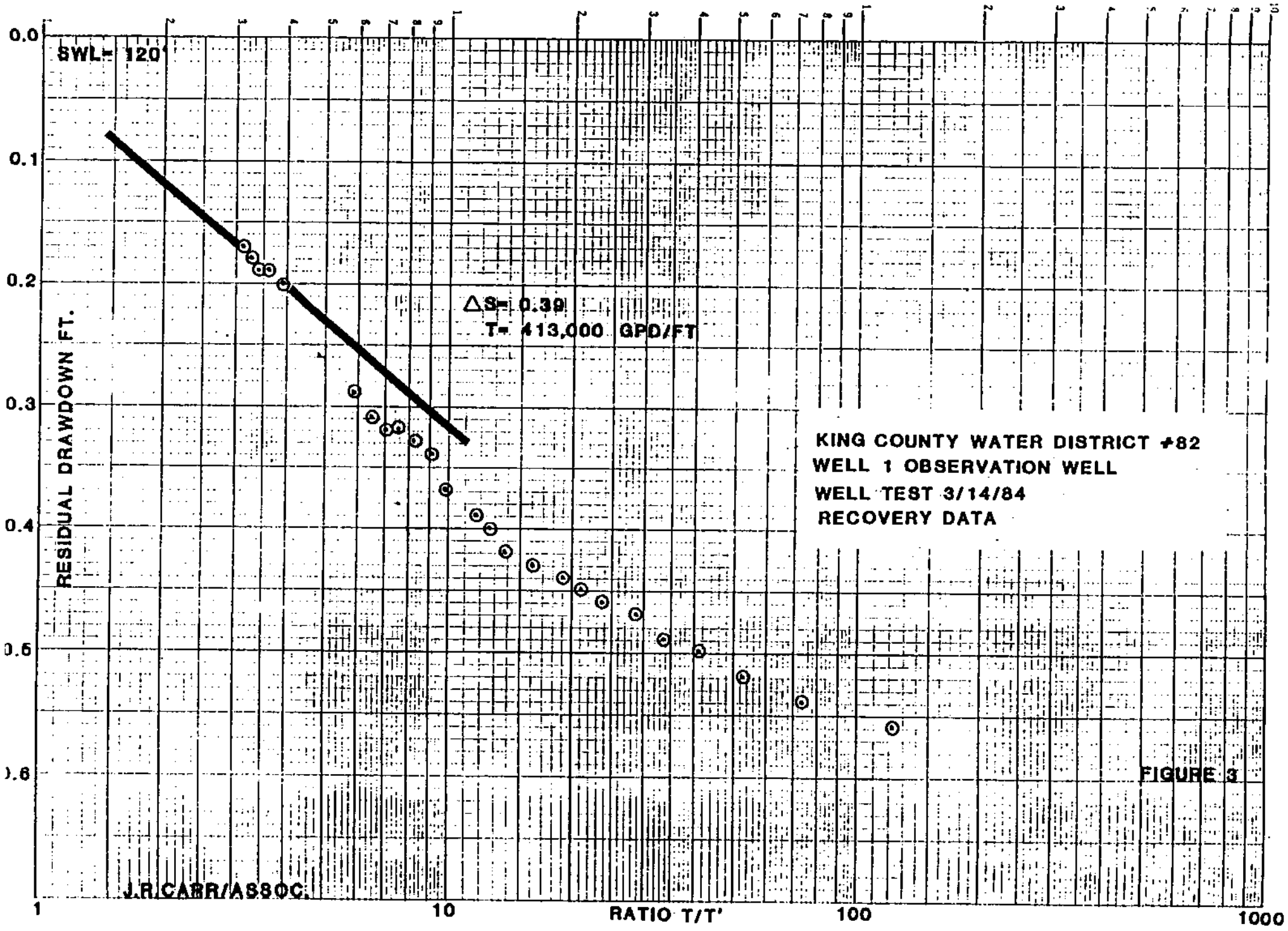
SWL= 120'
ΔS= 0.39
T= 413,000 GPD/FT
KING COUNTY WATER DISTRICT #82
WELL 1 OBSERVATION WELL
WELL TEST 3/14/84
RECOVERY DATA
RESIDUAL DRAWDOWN FT.
0.0
0.1
0.2
0.3
0.4
0.5
0.6
1
10
100
1000
RATIO T/T'
J.R.CARR/ASSOC.

FIGURE 3

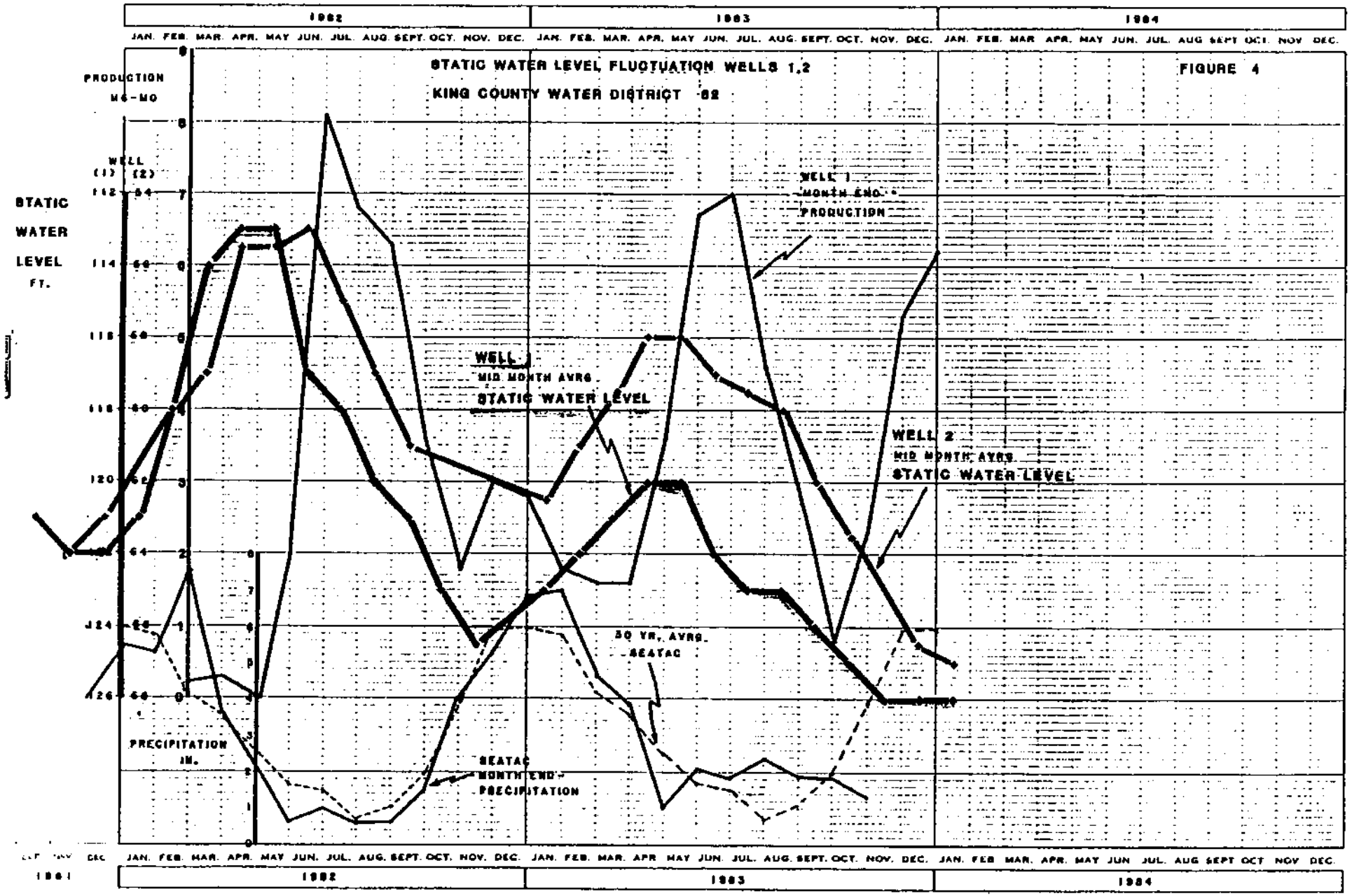

J.R. CARR/ASSOC.

ase Print Plainly
E HEAVY PENCIL
O NOT WRITE IN SHADED AREAS

LABORATORY NAME

WMA Lab - Tacoma

SEE BACK FOR INSTRUCTIONS

WATER SAMPLE INFORMATION FOR INORGANIC CHEMICAL ANALYSES

MBER	CO.	CITY	DATE RECEIVED	DATE COLLECTED	COLLECTED BY: Doug Deal
403445	17		03/15/84	03/14/84	Telephone: 206-851-5562

This a follow up of a previous out of compliance sample? Yes ☐ No ☐

If yes, what was the laboratory number of the previous sample? — — — — — — —

TEM I.D. NO.	SYSTEM NAME:	SYSTEM CLASS (circle one)	COUNTY
	KCWD 82	(1) 2 3 4	King

SAMPLE LOCATION	THIS SAMPLE TAKEN BEFORE TREATMENT	IF TAKEN *AFTER* TREATMENT WAS IT
1	☑ U AFTER ☐ T	FILTERED FLUORIDATED CHLORINATED WATER SOFTENER: TYPE USED

SOURCE TYPE:	SOURCE NO.	IF SOURCE IS LAKE OR STREAM, ENTER NAME	IF SAMPLE WAS DRAWN FROM DISTRIBUTION SYSTEM IT WAS COLLECTED FROM SYSTEM AT: (ADDRESS)
3 — 1. SURFACE ✓ 3. WELL — 2. SPRING — 4. PURCHASE	— —		

DATE ORIGINAL REPORT 03/20/84

REMARKS:
Well 1-R
1330
6 hr test at 600 GPM

SEND REPORT TO: (PRINT FULL NAME & ADDRESS)
J.R. Carr / Associates — Name
P.O. Box 1158 — Street
Gig Harbor — CITY, WA. — 98335 ZIP CODE
Telephone: (206) 851-5562 — Area Code

LABORATORY REPORT
(DO NOT WRITE BELOW THIS LINE)

TESTS		*MCL		Less Than <	RESULTS		Compliance YES	Compliance NO	Chemist Initials	Laboratory Number (if different than above)
Arsenic	As	0.05	P		0.002	mg/l	✓		JTV	
ium	Ba	1.0	P		00.03	mg/l	✓		JTV	
Cadmium	Cd	0.01	P		0.001	mg/l	✓		JTV	
omium	Cr	0.05	P		0.001	mg/l	✓		JTV	
Iron	Fe	0.3			00.03	mg/l	✓		JTV	
d	Pb	0.05	P		0.001	mg/l	✓		JTV	
Manganese	Mn	0.05			0.012	mg/l	✓		JTV	
cury	Hg	0.002	P		.0005	mg/l	✓		DLA	
nium	Se	0.01	P		0.001	mg/l	✓		JTV	
er	Ag	0.05	P		0.001	mg/l	✓		JTV	
ium	Na				009	mg/l	✓		JTV	
Hardness					062	mg/l As CaCO3	✓		DLA	
ductivity		700			118	Micromhos/cm 25° C	✓		DLA	
Turbidity		1.0	P		00.5	NTU	✓		DLA	
or		15.0			01.	Color Units	✓		DLA	
Fluoride	F	2.0	P		00.1	mg/l	✓		DLA	
ed	as N	10.0	P		01.6	mg/l	✓		DLA	
Chloride	Cl	250			001	mg/l	✓		DLA	
fate	SO_4	250				mg/l				

CL is the Maximum Contaminant Level Allowed

Laboratory Supervisor

Health
Environmental Health

WATER FACILITIES INVENTORY (WFI)

Read Instructions on back before completing

FILE
DATE RECEIVED 01/12/94
UPDATED
FEB 1 1994
Ans'd.....
DATE UPDATED: 01/11/94

1. SYSTEM ID NO.	2. COUNTY	GROUP	TYPE	WRIA
59003	KING	A	COMM	9

3. SYSTEM NAME: SAMMAMISH PLATEAU WATER & SEWER

STREET ADDRESS: 1510 228TH AVE SE.

P.O. BOX (IF APPLICABLE):

CITY: ISSAQUAH STATE: WA ZIP CODE: 98027

4. OWNER'S NAME (LAST, FIRST): SAMMAMISH PLATEAU WATER & OWNER NO.: 3007

STREET ADDRESS: 1510 228TH AVE. S.E.

P.O. BOX (IF APPLICABLE):

CITY: ISSAQUAH STATE: WA ZIP CODE: 98027

5. SYSTEM CONTACT PERSON: RONALD E. LITTLE - MANAGER TITLE:

DAY TELEPHONE: 206-392-6256 EVENING TELEPHONE:

6. OWNERSHIP (CHECK ONE ONLY)

- [ ] PRIVATE: NON-PROFIT
- [ ] PRIVATE: FOR-PROFIT
- [X] LOCAL GOVERNMENT (COUNTY/CITY/PUD/WATER DISTRICT)
- [ ] STATE
- [ ] FEDERAL

7. PREDOMINANT CHARACTERISTIC (CHECK ONE ONLY)

- [X] RESIDENTIAL
- [ ] RECREATIONAL
- [ ] BUSINESS/INDUSTRIAL/AGRICULTURAL/COMMERCIAL
- [ ] LODGING/FOOD SERVICE
- [ ] SCHOOL/DAY CARE
- [ ] OTHER (CHURCHES, ETC.)

WFI COMPLETED BY: TITLE:

DAY TELEPHONE: DATE:

8. SUBMITTED FOR: [ ] NEW SYSTEM [ ] NO CHANGE [ ] REACTIVATE [ ] SYSTEM NAME CHANGE* [ ] UPDATE [ ] DELETE

*OLD SYSTEM NAME - ENTER ONLY IF CHANGING WITH THIS WFI

SYSTEMS SERVING ANY RESIDENTS (PEOPLE LIVING IN A DWELLING SERVED BY THE SYSTEM), COMPLETE THIS SECTION

9. NUMBER ACTIVE RESIDENTIAL CONNECTIONS: 8844

10. NUMBER ACTIVE RESIDENTIAL POPULATION: 25,647

SYSTEMS SERVING ANY NON-RESIDENTS (I.E., TRAVELERS, EMPLOYEES, STUDENTS, ETC.), COMPLETE THIS SECTION

11. NUMBER NON-RESIDENTIAL CONNECTIONS:

12. ENTER AVERAGE DAILY NON-RESIDENTIAL POPULATION SERVED FOR EACH MONTH: MAKE ENTRY FOR EACH MONTH

JAN		AUG	
	MAY		NOV
MAR		SEP	

13. DOES THE SYSTEM SERVE AT LEAST 25 OF THE SAME NON-RESIDENTS FOR 4 OR MORE DAYS PER WEEK FOR AT LEAST 180 DAYS PER YEAR? [ ] YES [X] NO

14. TOTAL NUMBER CONNECTIONS METERED: 8,844

15. DISTRIBUTION RESERVOIR(S) TOTAL CAPACITY: 12,850,000 GALLONS

16. DOH SOURCE NUMBER	17. SOURCE NAME (LIST UTILITY'S NAME FOR SOURCE IF SOURCE IS PURCHASED OR INTERTIED; LIST SELLER'S ID# AND NAME USING FOLLOWING FORMAT: XXXXXX/NAME EXAMPLE: 77050Y/SEATTLE)	18. SOURCE CATEGORY: WELL	WELL FIELD	SURFACE	SPRING	RANNEY/INF. GAL.	INTERTIE	PURCHASE-TREATED	PURCHASE-UNTREATED	19. USE: PERMANENT	SEASONAL	EMERGENCY	20. SOURCE METERED	21. TREATMENT: NONE	CHLORINATION	FILTRATION	FLUORIDATION	OTHER	22. WELL DEPTH (FEET)	23. SOURCE CAPACITY (GPM)	24. SOURCE LOCATION: 1/4, 1/4 SEC.	SEC. NO.	TWP.	RNG.	SWTR EVALUATION VOC EVALUATION
S01	WELL 1	X							X					X					154	500	SW/NE	10	24N	06E	
S02	WELL 2	X								X				X					132	360	NW/SE	11	24N	06E	
S03	WELL # 5	X							X						X				716	450	NW/SW	34	25N	06E	
S04	WELL # 4	X							X						X				714	625	SW/NW	34	25N	06E	
S05	WELL 6	X								X					X				365	600	NE/SE	32	25N	06E	
S06	WELL #7	X								X				X					150	2,000	SE/SE	21	24N	06E	
S07	WELL #8	X							X					X					150	3,500	SE/SE	21	24N	06E	

MINIMUM REQUIRED BACTERIOLOGICAL SAMPLING SCHEDULE

25.	26.	JAN	FEB	MAR	APR	MAY	JUN	JUL	AUG	SEP	OCT	NOV	DEC
		30	30	30	30	30	30	30	30	30	30	30	30

NO. APPROVED SERVICES (PER PLANS): 0 DATE OF LAST SANITARY SURVEY: 0000 BY DOH [ ] LHD [ ]

SYSTEM IN CRITICAL WATER SUPPLY SERVICE AREA? [X] YES [ ] NO GW MGMT AREA? [ ] YES [ ] NO FOR LHD USE ONLY

EFFECTIVE DATE RETRO. CHANGES: SIGNATURE OF DOH REVIEWER: DATE:

WATER SYSTEM

1989

SAMMAMISH PLATEAU WATER & SEWER DISTRICT

WATER SAMPLE INFORMATION FOR INORGANIC CHEMICAL ANALYSES - 1989

ITEM	WELL 1 8/4/89	WELL 2 4/10/89	WELL 4 4/10/89	WELL 5 4/10/89	WELL 6 7/17/89	WELL 7 7/17/89	WELL 8 4/10/89	*MCL
pH	7.06	7.23	8.22	8.32	7.46	7.48	*7.05	----
Arsenic	*0.010	*0.010	*0.010	*0.010	*0.010	*0.010	*0.010	0.05
Barium	*0.25	*0.25	*0.25	*0.25	*0.25	*0.25	*0.25	1.0
Cadmium	*0.002	*0.002	*0.002	*0.002	*0.002	*0.002	*0.002	0.01
Chromium	*0.010	*0.010	*0.010	*0.010	*0.010	*0.010	*0.010	0.005
Iron	*0.05	*0.05	*0.05	*0.05	*0.05	0.05	*0.05	0.3
Lead	*0.010	*0.010	*0.010	*0.010	*0.010	*0.010	*0.010	0.05
Manganese	*0.010	*0.010	0.041	0.042	0.026	*0.010	*0.010	0.05
Mercury	*0.0010	*0.0010	*0.0010	*0.0010	*0.0010	*0.0010	*0.0010	0.002
Selenium	*0.005	*0.005	*0.005	*0.005	*0.005	*0.005	*0.005	0.01
Silver	*0.010	*0.010	*0.010	*0.010	*0.010	*0.010	0.010	0.05
Sodium	*10	*10	*10	*10	*10	*10	*10	
Hardness	60	87	63	61	48	74	81	
Conductivity	155	220	160	150	120	200	200	700
Turbidity	*0.1	*0.4	*0.2	*0.1	*0.1	0.2	*0.1	1.0
Color	*5.0	*5.0	*5.0	*5.0	*5.0	15.0	*5.0	15.0
Fluoride	*0.2	*0.2	*0.2	*0.2	*0.2	*0.2	*0.2	2.0
Nitrate	1.1	*0.7	*0.2	*0.2	*0.2	1.6	*0.2	10.0
Chloride	*10	*10	*10	*10	*10	*10	*10	250
Sulfate								250

PARTS PER MILLION

*MCL is the Maximum Contaminant Level Allowed

*Less Than

(Note: Well 7 was re-tested for Iron & Turbidity and those numbers are listed above.)

SAMMAMISH PLATEAU WATER AND SEWER DISTRICT
WATER SAMPLE INFORMATION FOR INORGANIC CHEMICAL ANALYSIS - 1990

ITEM	WELL 1 9/7/90	WELL 2 4/10/89	WELL 4 9/7/90	WELL 5 9/7/90	WELL 6 9/7/90	WELL 7 9/7/90	WELL 8 9/7/90	** MCL
pH	6.74	7.23	7.26	7.74	7.88	7.29	7.12	
Arsenic	<0.010	<0.010	<0.010	<0.010	<0.010	<0.010	<0.010	0.05
Barium	<0.25	<0.25	<0.25	<0.25	<0.25	<0.25	<0.25	1.00
Cadmium	<0.002	<0.002	<0.002	<0.002	<0.002	<0.002	<0.002	0.01
Chromium	<0.010	<0.010	<0.010	<0.010	<0.010	<0.010	<0.010	0.05
Iron	<0.05	<0.05	<0.05	<0.05	<0.05	<0.05	<0.05	0.3
Lead	<0.005	<0.0100	<0.005	<0.005	<0.005	<0.005	<0.005	0.05
Manganese	<0.010	<0.0100	<0.039	<0.037	<0.028	<0.010	<0.010	0.05
Mercury	<0.0010	<0.0010	<0.0010	<0.0010	<0.0010	<0.0010	<0.0010	0.002
Selenium	<0.05	<0.005	<0.005	<0.005	<0.005	<0.005	<0.005	0.01
Silver	<0.010	<0.0100	<0.010	<0.010	<0.010	<0.010	<0.010	0.05
Sodium	<10	<10	<10	<10	<10	<10	<11	
Hardness	79	87	58	58	51	72	72	
Conductivity	85	220	150	154	125	189	188	700
Turbidity	<0.2	<0.4000	<0.1	<0.1	<0.2	<0.1	<0.9	1.0
Color	<5.0	<5.0	<10.0	<10.0	<5.0	<5.0	<10.	15
Fluoride	<0.2	<0.2000	<0.2	<0.2	<0.2	<0.2	<0.2	2.0
Nitrate	<1.3	<0.7000	<0.2	<0.2	<0.2	<0.2	<1.3	10.0
Chloride	<10	<10	<10	<10	<10	<10	<10	250

PARTS PER MILLION

< Less than Detectable Limits

** Maximum Contaminant Level

SAMMAMISH PLATEAU WATER AND SEWER DISTRICT
WATER SAMPLE INFORMATION FOR INORGANIC CHEMICAL ANALYSIS - 1991

ITEM	WELL 1 7/12/91	WELL 2 7/12/91	WELL 4 7/12/91	WELL 5 7/12/91	WELL 6 7/12/91	WELL 7 7/12/91	WELL 8 7/12/91	** MCL
pH	6.6	6.4	7.3	6.7	6.7	7.1	6.8	
Arsenic	<0.010	<0.010	<0.010	<0.010	<0.010	<0.010	<0.010	0.05
Barium	<0.25	<0.25	<0.25	<0.25	<0.25	<0.25	<0.25	1.00
Cadmium	<0.002	<0.002	<0.002	<0.002	<0.002	<0.002	<0.002	0.01
Chromium	<0.010	<0.010	<0.010	<0.010	<0.010	<0.010	<0.010	0.05
Iron	<0.05	<0.05	<0.05	<0.05	<0.05	<0.05	<0.05	0.3
Lead	<0.005	<0.005	<0.005	<0.005	<0.005	<0.005	<0.005	0.05
Manganese	<0.010	<0.010	<0.018	<0.026	<0.023	<0.010	<0.010	0.05
Mercury	<0.0010	<0.010	<0.0010	<0.0010	<0.0010	<0.0010	<0.0010	0.002
Selenium	<0.005	<0.005	<0.005	<0.005	<0.005	<0.005	<0.005	0.01
Silver	<0.010	<0.010	<0.010	<0.010	<0.010	<0.010	<0.010	0.05
Sodium	7.	6.	9.	8	5	10	12	
Hardness	61	66	52	51	43	61	75	
Conductivity	180	270	120	130	120	190	210	700
Turbidity	0.2	0.6	.4	<0.3	.3	.4	0.3	1.0
Color	<5.0	<5.0	<5.0	<5.0	<5.0	<5.0	<5.	15
Fluoride	<0.2	<0.2	<0.2	<0.2	<0.2	<0.2	<0.2	
Nitrate	1.2	<1.9	1.8	<0.2	<0.2	<0.2	1.3	
Chloride	<10	<10	<10	<10	21	24	<10	

SAMMAMISH PLATEAU WATER AND SEWER DISTRICT
WATER SAMPLE INFORMATION FOR INORGANIC CHEMICAL ANALYSIS - 1992

ITEM	WELL 1 2/14/92	WELL 2 2/14/92	WELL 4 2/14/92	WELL 5 2/14/92	WELL 6 2/14/92	WELL 7 2/14/92	WELL 8 7/12/91	** MCL
pH	7.0	7.3	7.93	8.4	8.4	7.7	6.8	
Arsenic	<0.010	<0.01	<0.01	<0.01	<0.01	<0.01	<0.010	.05
Barium	<0.1	<0.1	<0.1	<0.1	<0.1	<0.1	<0.25	1.00
Cadmium	<0.002	<0.002	<0.002	<0.002	<0.002	<0.002	<0.002	0.01
Chromium	<0.05	<0.05	<0.05	<0.05	<0.05	<0.05	<0.010	0.05
Iron	<0.05	<0.05	<0.05	<0.05	0.37	<0.05	<0.05	0.3
Lead	<0.002	<0.002	<0.0025	<0.002	<0.002	<0.002	<0.005	0.05
Manganese	<0.01	<0.01	0.043	<0.041	0.038	<0.01	<0.010	0.05
Mercury	<0.0002	<0.0002	<0.0002	<0.0002	<0.0002	<0.0002	<0.0010	0.002
Selenium	<0.005	<0.005	<0.005	<0.005	<0.005	<0.005	<0.005	0.01
Silver	<0.01	<0.01	<0.01	<0.01	<0.01	<0.01	<0.010	0.05
Sodium	9.5	6.1	8.7	8.4	4.8	10	12	
Hardness	85.	75	62	62	56	79	75	
Conductivity	180.	150	140	140	120	170	210	700
Turbidity	0.46	0.42	.33	0.32	.90	.32	0.3	1.0
Color	<5.0	<5.0	<5.0	<5.0	<5.0	<5.0	<5.	15
Fluoride	<0.5	<0.5	<0.5	<0.5	<0.5	<0.5	<0.2	2
Nitrate	1.0	<1.8	<1.0	<1.0	<1.0	<1.0	1.3	10
Chloride	<20.	<20	<20	<20	<20	<20	<10	250
Sulfate	10.	<10.	<10.	<10	<10	11		250
Copper	<0.02	<0.02	<0.02	<0.02	<0.02	<0.02		1.0
Zinc	<0.05	<0.05	<0.05	<0.05	<0.05	<0.05		5.0
Aluminum	<5.0	<5.0	<5.0	<5.0	<5.0	<5.0		
Calcium	19.	18.	18	18	16	20.		

SAMMAMISH PLATEAU WATER AND SEWER DISTRICT
WATER SAMPLE INFORMATION FOR INORGANIC CHEMICAL ANALYSIS - 1993

ITEM	WELL 1	WELL 2	WELL 4	WELL 5	WELL 6	WELL 7	WELL 8	WELL 9	** MCL
	3-2-93	3-2-93	3-2-93	3-2-93	3-2-93	3-2-93	3-2-93	3-2-93	
Arsenic	< 0.01	< 0.01	< 0.01	< 0.01	< 0.01	< 0.01	< 0.01	< 0.01	0.05
Barium	< 0.1	< 0.1	< 0.1	< 0.1	< 0.1	< 0.1	< 0.1	< 0.1	1
Cadmium	< 0.002	< 0.002	< 0.002	< 0.002	< 0.002	< 0.002	< 0.002	< 0.002	0.01
Chromium	< 0.05	< 0.05	< 0.05	< 0.05	< 0.05	< 0.05	< 0.05	< 0.05	0.05
Copper	< 0.02	< 0.02	< 0.02	< 0.02	< 0.02	< 0.02	< 0.02	< 0.02	1.3
Iron	< 0.05	< 0.05	< 0.05	< 0.05	< 0.05	< 0.05	< 0.05	< 0.17	0.3
Lead	< 0.002	< 0.002	< 0.002	< 0.002	< 0.002	< 0.002	< 0.002	< 0.002	0.05
Manganese	< 0.01	< 0.01	< 0.043	< 0.041	< 0.092	< 0.01	< 0.01	< 0.01	0.05
Mercury	< 0.0002	< 0.0002	< 0.0002	< 0.0002	< 0.0002	< 0.0002	< 0.0002	< 0.0002	0.002
Selenium	< 0.005	< 0.005	< 0.005	< 0.005	< 0.005	< 0.005	< 0.005	< 0.005	0.01
Silver	< 0.01	< 0.01	< 0.01	< 0.01	< 0.01	< 0.01	< 0.01	< 0.01	0.05
Sodium	9.1	9.3	9.0	7.7	8.4	9.5	10.	8.5	
Zinc	< 0.05	< 0.05	< 0.05	< 0.05	< 0.05	< 0.05	< 0.05	< 0.05	5
Hardness	78.	80	65	65	93	79	75	68	
Conductivity	190	150	160	150	210	190	190	160	700
Turbidity	0.10	0.49	0.17	0.15	0.1	0.1	0.14	0.43	1
Color	5.	5.	5.	5.	5.	5.	5.	5.	15
Chloride	< 20	< 20	< 20	< 20	< 20	< 20	< 20	< 20	250
Fluoride	< 0.5	< 0.5	< 0.5	< 0.5	< 0.5	< 0.5	< 0.5	< 0.5	2
Nitrate	< 1.0	< 1.0	< 1.0	< 1.0	< 1.0	< 1.0	< 1.1	< 1.0	10
Sulfate	< 10	< 10	< 10	< 13	< 10	< 10	< 10	< 10	250

LEGEND

< Less Than Detectable Limits

** Maximum Contaminant Level

GROUND WATER CONTAMINATION
Susceptibility Assessment Survey Form

SAMMAMISH PLATEAU WATER & SEWER DISTRICT
1510 228th Avenue S.E.
Issaquah, Washington 98027

WELL NO. 2

GROUND WATER CONTAMINATION
Susceptibility Assessment Survey Form

TABLE OF CONTENTS

- Susceptibility Assessment Survey Form
- Well 2 Asbuilt
- Sammamish Plateau Well 2 WHPA Capture Zones
- Well 2 WHPA Zones - FYI
- Well Log
- Water Facilities Inventory Form
- Inorganic Chemical Analysis 1989 - 1993

Ground Water Contamination Susceptibility Assessment Survey Form

Version 2.1

IMPORTANT! Please complete one form for each ground water source (well, wellfield, spring) used in your water system. Photocopy as necessary.

PART I: System Information

Well owner/manager : SAMMAMISH PLATEAU WATER & SEWER DIST.

Water system name : SAMMAMISH PLATEAU WATER & SEWER DIST.

County: KING

Water system number: 409009 Source number: S02

Well depth: 132 (ft.) (*From WFI form*)

Source name: WELL 2

WA well identification tag number: ___ ___ ___-___ ___ ___

X well not tagged

Number of connections: 9000 Population served: 26,000

Township: 24 N Range: 06E

Section: 11 1/4 1/4 Section: NW/SE

Latitude/longitude (if available): _____/_____

How was lat./long. determined?

_____ global positioning device _____ survey _____ topographic map

____other: _____

• Please refer to Assistance Packet for details and explanations of all questions in Parts II through V.

PART II: Well Construction and Source Information

1) Date well originally constructed: 10/15/68 month/day/year

last reconstruction: ___/___/___ month/day/year

_____ information unavailable

2) Well driller: RICHARDSON WELL DRILLING
219 So. 115TH ST.
TACOMA, WA. 98444

___ well driller unknown

3) Type of well:

X Drilled: ___ rotary ___ bored X cable (percussion) ___ Dug

___ Other: ___ spring(s) ___ lateral collector (Ranney)

___ driven ___ jetted ___ other: _____

Additional comments: _____

4) Well report available? X YES (attach copy to form) ___ NO

If no well log is available, please attach any other records documenting well construction; e.g. boring logs, "as built" sheets, engineering reports, well reconstruction logs.

5) Average pumping rate: 360 (gallons/min)

Source of information: WATER FACILITIES INVENTORY

If not documented, how was pumping rate determined? _____

___ Pumping rate unknown.

6) Is this source treated? No

If so, what type of treatment:

___ disinfection ___ filtration ___ carbon filter ___ air stripper ___ other

Purpose of treatment (describe materials to be removed or controlled by treatment):

_____

7) If source is chlorinated, is a chlorine residual maintained: ___ YES ___ NO N/A

Residual level: _____ (*At the point closest to the source.*)

PART III: Hydrogeologic Information

1) Depth to top of open interval: [check one]

___ < 20 ft ___ 20–50 ft ___ 50–100 ft X 100–200 ft ___ > 200 ft

___ information unavailable ('< ' *means less than;* '> ' *means greater than*)

2) Depth to ground water (static water level):

___ < 20 ft ___ 20–50 ft X 50–100 ft ___ > 100 ft

___ flowing well/spring (artesian)

How was water level determined?

X well log ___ other: _____

___ depth to ground water unknown

3) If source is a flowing well or spring, what is the confining pressure: N/A

_____ psi (pounds per square inch)
or
_____ feet above wellhead

4) If source is a flowing well or spring, is there a surface impoundment, reservoir, or catchment associated with this source: ___ YES ___ NO N/A

5) Wellhead elevation (height above mean sea level): 414 (ft)

How was elevation determined? ___ topographic map X Drilling/Well Log ___ altimeter

___ other: _____

___ information unavailable

6) Confining layers: (This can be completed only for those sources with a drilling log, well log or geologic report describing subsurface conditions. Please refer to assistance package for example.)

X evidence of a confining layer in well log

___ no evidence of a confining layer in well log

If there is evidence of a confining layer, is the depth to ground water more than 20 feet above the top of the open interval? X YES ___ NO

___ information unavailable

7) Sanitary setback:

___ < 100 ft* X 100–120 ft ___ 120–200 ft ___ > 200 ft
* if less than 100 ft describe the site conditions:

8) Wellhead construction:

X wellhead enclosed in a wellhouse

X controlled access (describe): FENCED + GATED

___ other uses for wellhouse (describe): ___

___ no wellhead control

9) Surface seal:

___ 18 ft

___ < 18 ft (no Department of Ecology approval) ('< ' *means less than*)

___ < 18 ft (Approved by Ecology, include documentation) ('< ' *means less than*)

X > 18 ft ('> ' *means greater than*)

___ depth of seal unknown

___ no surface seal

10) Annual rainfall (inches per year):

___ < 10 in/yr ___ 10–25 in/yr X > 25 in/yr

PART IV: Mapping Your Ground Water Resource

1) Annual volume of water pumped: 44,373,500 (gallons)

How was this determined?

X meter

___ estimated: ___ pumping rate (_____)

___ pump capacity (_____)

___ other: _____

2) "Calculated Fixed Radius" estimate of ground water movement:
(see Instruction Packet)

6 month ground water travel time : 440 (ft)

1 year ground water travel time : 620 (ft)

5 year ground water travel time: 1390 (ft)

10 year ground water travel time: 1970 (ft)

These are the CFR's per this packet. The District has additional WHPA Capture Zone Information for this well, which is attached. The following questions are answered for the capture zones identified on the WHPA map.

Information available on length of screened/open interval?

X YES ___ NO

Length of screened/open interval: 20 (ft)

3) Is there a river, lake, pond, stream, or other obvious surface water body within the 6 month time of travel boundary? ___ YES X NO (mark and identify on map).

4) Is there a stormwater and/or wastewater facility, treatment lagoon, or holding pond located within the 6 month time of travel boundary? ___ YES X NO (mark and identify on map).

Comments: _____

PART V: Assessment of Water Quality

1) Regional sources of risk to ground water:

Please indicate if any of the following are present within a circular area around your water source having a radius up to and including the five year ground water travel time:

	6 month	1 year	5 year	unknown
likely pesticide application	✓	✓		
stormwater injection wells	No	No	No	
other injection wells *see comments	No	No	No	
abandoned ground water well				✓
landfills, dumps, disposal areas	No	No	No	
known hazardous materials clean-up site	No	No	No	
water system(s) with known quality problems				✓
population density > 1 house/acre	YES	YES	YES	
residences commonly have septic tanks	YES	YES	YES	
Wastewater treatment lagoons	No	No	No	
sites used for land application of waste	No	No	No	

Mark and identify on map any of the risks listed above which are located within the 6 month time of travel boundary? (*Please include a map of the wellhead and time of travel areas with this form. Please locate and mark any of the following.*)

If other recorded or potential sources of ground water contamination exist within the ten year time of travel circular zone around your water supply, please describe:

*Well 2 has been used as an injection well as part of a groundwater recharge project, with drinking quality water.

2) Source specific water quality records:

Please indicate the occurrence of any test results since 1986 that meet the following conditions: (Unless listed on assessment, MCLs are listed in assistance package.)

A. Nitrate: (Nitrate MCL = 10 mg/l)

	YES	NO
Results greater than MCL		X
< 2 mg/liter nitrate	X	
2-5 mg/liter nitrate		X
> 5 mg/liter nitrate		X
___ Nitrate sampling records unavailable		

B. VOCs: (VOC detection level 0.5 ug/l or 0.0005 mg/l.)

	YES	NO
Results greater than MCL or SAL		X
VOCs detected at least once		X
VOCs never detected	X	
___ VOC sampling records unavailable		

C. EDB/DBCP:

(EDB MCL = 0.05 ug/l or 0.00005 mg/l. DBCP MCL = 0.2 ug/l or 0.0002 mg/l.)

	YES	NO
EDB/DBCP detected below MCL at least once		
EDB/DBCP detected above MCL at least once		
EDB/DBCP never detected		

___ EDB/DBCP tests required but not yet completed

X EDB/DBCP tests not required

D. Other SOCs (Pesticides):

	YES	NO
Other SOCs detected (pesticides and other synthetic organic chemicals)		

___ Other SOC tests performed but none detected (list test methods in comments

X Other SOC tests not performed

If any SOCs in addition to EDB/DBCP were detected, please identify and date. If other SOC tests were performed, but no SOCs detected, list test methods here: _____

E. Bacterial contamination:

	YES	NO
Any bacterial detection(s) in the past 3 years in samples taken from the source (not distribution sampling records).	___	X
Has source (in past 3 years) had a bacteriological contamination problem found in distribution samples that was attributed to the source.	___	X

___ Source sampling records for bacteria unavailable

Part VI: Geographic or Hydrologic Factors Contributing to a Non-Circular Zone of Contribution

The following questions will help identify those ground water systems which may not be accurately represented by the calculated fixed radius (CFR) method described in Part IV. For these sources, the CFR areas should be used as a preliminary delineation of the critical time of travel zones for that source. As a system develops its Wellhead Protection Plan for theses sources, a more detailed delineation method should be considered.

1) Is there evidence of obvious hydrologic boundaries within the 10 year time of travel zone of the CFR? (Does the largest circle extend over a stream, river, lake, up a steep hillside, and/or over a mountain or ridge?)

X YES ___ NO

Describe with references to map produced in Part IV:

THEIR ARE STREAMS FEEDING AND EXITING YELLOW LAKE, IN THE 5 YEAR CAPTURE ZONE, ALTHOUGH YELLOW LAKE IS OUTSIDE THE CAPTURE ZONE. THERE IS ALSO A RAVINE LOCATED AT THE SOUTHERN EDGE OF THE FIVE AND TEN YEAR CAPTURE ZONES.

2) Aquifer Material:

A) Does the drilling log, well log or other geologic/engineering reports identify that the well is located in an area where the underground conditions are identified as fractured rock and/or basalt terrain?

___ YES X NO

B) Does the drilling log, well log or other geologic/engineering reports indicate that the well is located in an area where the underground conditions are primarily identified as coarse sand and gravel?

X YES ___ NO

3) Is the source located in an aquifer with a high horizontal flow rate? (These can include sources located on flood plains of large rivers, artesian wells with high water pressure, and/or shallow flowing wells and springs.)

___ YES X NO

4) Are there other high capacity wells (agricultural, municipal and/or industrial) located within the CFRs? No

a) Presence of ground water extraction wells removing more than approximately 500 gal/min within...

	YES	NO	unknown
< 6 month travel time		✓	
6 month–1 year travel time		✓	
1–5 year travel time		✓	
5–10 year travel time		✓	

b) Presence of ground water recharge wells (dry wells) or heavy irrigation within...

	YES	NO	unknown
< 1 year travel time		✓	
1–5 year travel time		✓	
5–10 year travel time		✓	

Please identify or describe additional hydrologic or geographic conditions that you believe may affect the shape of the zone of contribution for this source. Where possible, reference them to locations on the map produced in Part IV.

* Well 2 has been used as an injection well as part of a groundwater recharge project, with drinking quality water.

Suggestions and Comments

Did you attend one of the susceptibility workshops? X YES ___ NO

Did you find it useful? X YES ___ NO

Did you seek outside assistance to complete the assessment? X YES ___ NO

This form and instruction packet are still in the process of development. Your comments, suggestions and questions will help us upgrade and improve this assessment form. If you found particular sections confusing or problematic please let us know. How could this susceptibility assessment be improved or made clearer? Did the instruction package help you find the information needed to complete the assessment? How much time did it take you to complete the form? Were you able to complete the assessment without additional/outside expertise? Do you feel the assessment was valuable as a learning experience? Any other comments or constructive criticisms you have would be appreciated.

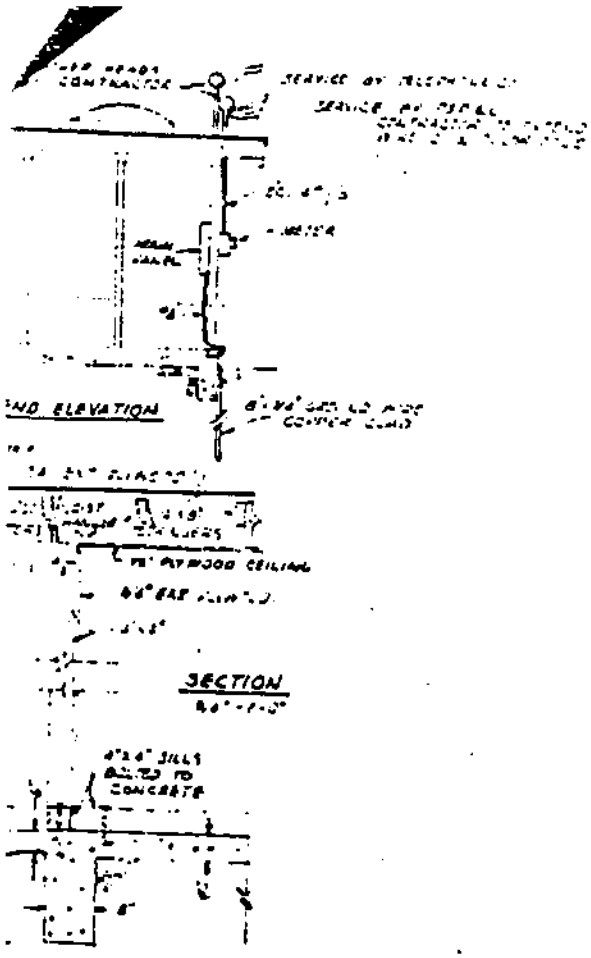

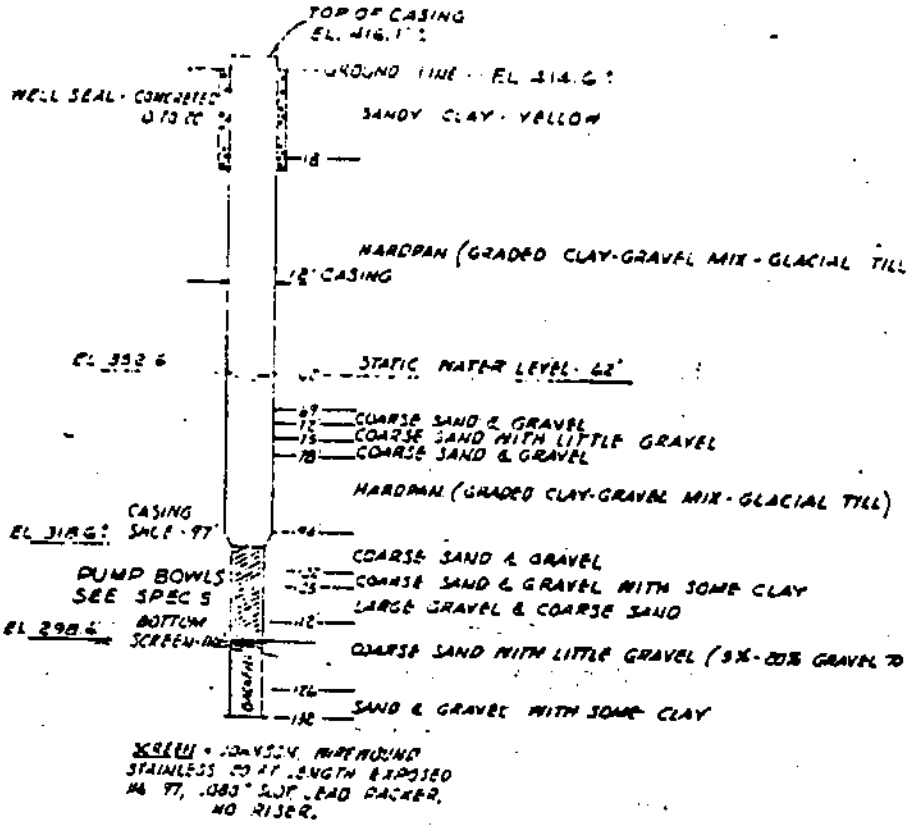

LOG OF EXISTING WELL Nº 2

CONTRACT II - U.L.I.D. Nº 1, Nº 2 & Nº 3

KING COUNTY WATER DISTRICT Nº 121

WELL SITE & CONTROL BUILDING Nº 2
BUILDING PLAN MECHANICAL & ELEC DETAILS

Well 2

SAMMAMISH PLATEAU WELLS 1R & 2
WHPA CAPTURE ZONES

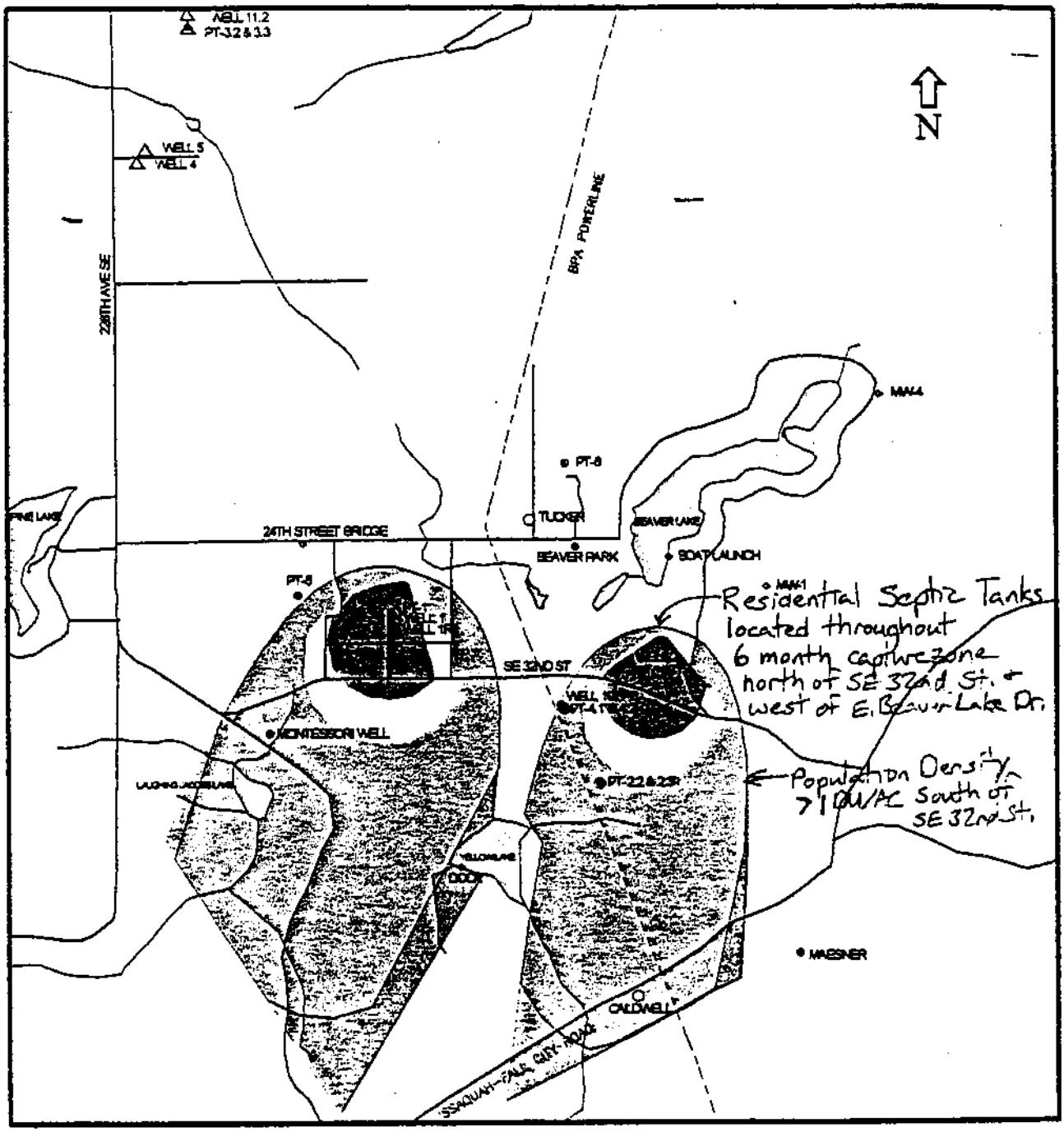

SYMBOL KEY:

- ◇ ZONE I AND SURFACE WATER MONITORING STATIONS
- ○ ZONE IIa MONITORING WELL
- ● ZONE IIb MONITORING WELL
- △ ZONE IV MONITORING WELL

- 6-month capture zone
- 1-year capture zone
- 5-year capture zone
- 10-year capture zone

SCALE (MILES)

0 1/4 1/2 1

Not Used - Provided FYI only. See WHPA Zones

Sammamish Plateau Water & Sewer District

Well 2

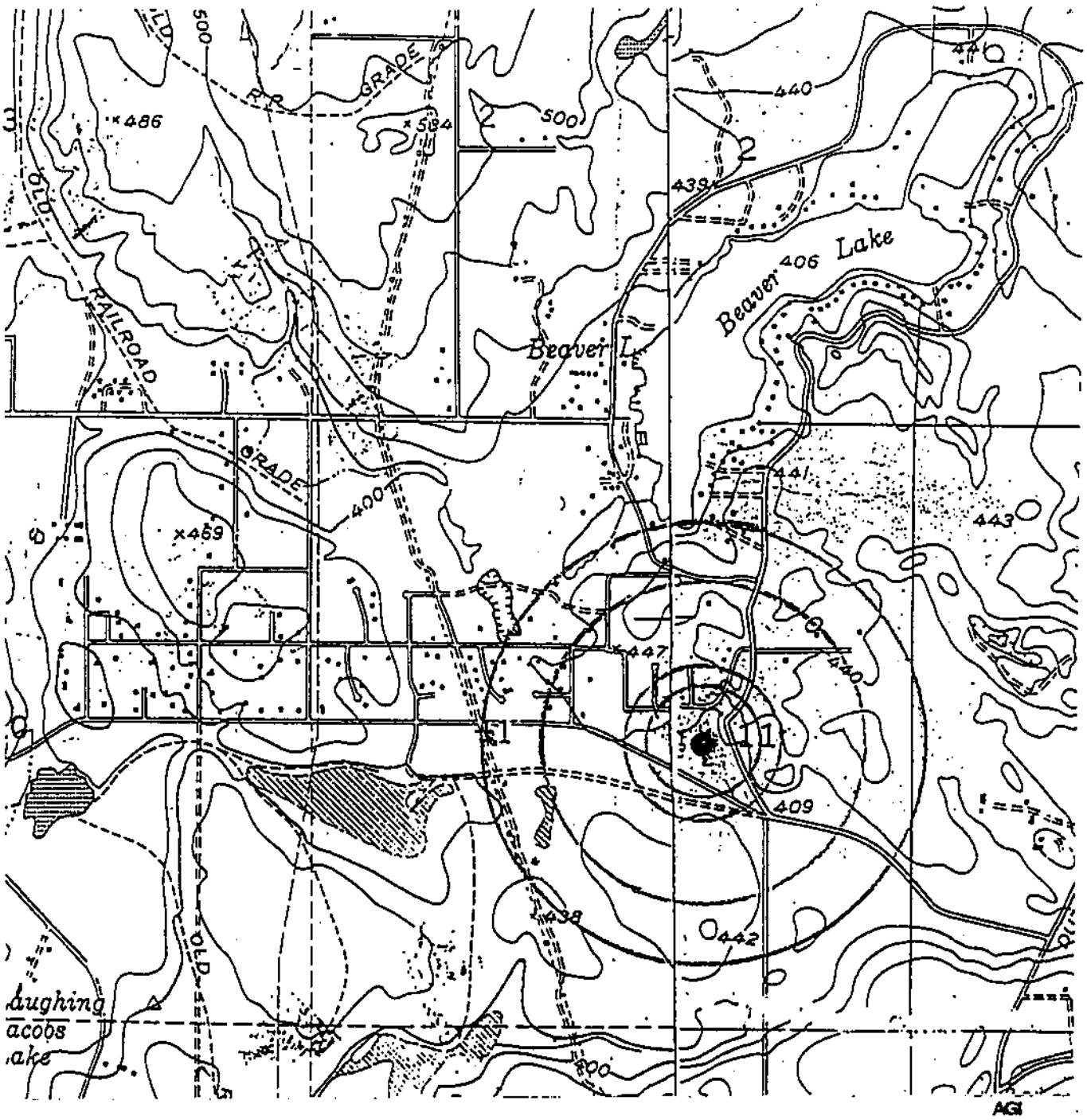

"LEGEND"

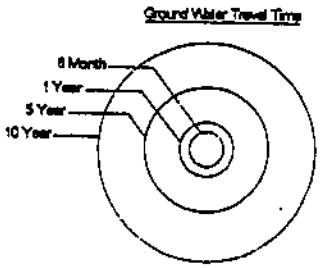

SCALE (FT)

0 1000 2000 3000 4000 5000

WATER WELL REPORT

STATE OF WASHINGTON

Application No. _____

Permit No. _____

(1) OWNER: Name King County Water District #121 Address 24256 SE 32nd, Rt 1, Issaquah, Wn 98027

(2) LOCATION OF WELL: County King — NW ¼ SE ¼ Sec 11 T. 24 N., R. 6E W.M.

Bearing and distance from section or subdivision corner 570 ft West & 100 ft South of NE corner of NW 1/4

(3) PROPOSED USE: Domestic ☐ Industrial ☐ Municipal ☒ Irrigation ☐ Test Well ☐ Other ☐

(4) TYPE OF WORK: Owner's number of well (if more than one) 2

New well ☒ Method: Dug ☐ Bored ☐ Deepened ☐ Cable ☒ Driven ☐ Reconditioned ☐ Rotary ☐ Jetted ☐

(5) DIMENSIONS: Diameter of well 12 inches. Drilled 132 ft. Depth of completed well 116 ft.

(6) CONSTRUCTION DETAILS:

Casing installed: 12 " Diam. from 0 ft. to 97 ft.

Threaded ☐ _____ " Diam. from _____ ft. to _____ ft.

Welded ☒ _____ " Diam. from _____ ft. to _____ ft.

Perforations: Yes ☐ No ☒

Type of perforator used _____

SIZE of perforations _____ in. by _____ in.

_____ perforations from _____ ft. to _____ ft.

_____ perforations from _____ ft. to _____ ft.

_____ perforations from _____ ft. to _____ ft.

Screens: Yes ☒ No ☐

Manufacturer's Name UPO Johnson

Type Stainless Steel Model No. _____

Diam. 12" Slot size .080" from 96 ft. to 116 ft.

Diam. _____ Slot size _____ from _____ ft. to _____ ft.

Gravel packed: Yes ☐ No ☒ Size of gravel: _____

Gravel placed from _____ ft. to _____ ft.

Surface seal: Yes ☒ No ☐ To what depth? 20 ft.

Material used in seal Concrete

Did any strata contain unusable water? Yes ☐ No ☒

Type of water? _____ Depth of strata _____

Method of sealing strata off _____

(7) PUMP: Manufacturer's Name _____

Type _____ H.P. _____

(8) WATER LEVELS: Land-surface elevation above mean sea level 414

Static level 62 ft. below top of well Date 10/10/68

Artesian pressure _____ lbs. per square inch Date _____

Artesian water is controlled by _____ (Cap, valve, etc.)

(9) WELL TESTS: Drawdown is amount water level is lowered below static level

Was a pump test made? Yes ☒ No ☐ If yes, by whom? Driller

Yield: 300 gal./min. with 11 ft. drawdown after 12 hrs.

" 500 " 36 " 12 "

" " " "

Recovery data (time taken as zero when pump turned off) (water level measured from well top to water level)

Time	Water Level	Time	Water Level	Time	Water Level

Date of test 10/10 & 10/11/68

Bailer test _____ gal./min. with _____ ft. drawdown after _____ hrs.

Artesian flow _____ g.p.m. Date _____

Temperature of water 50°F Was a chemical analysis made? Yes ☒ No ☐

(10) WELL LOG:

Formation: Describe by color, character, size of material and structure, and show thickness of aquifers and the kind and nature of the material in each stratum penetrated, with at least one entry for each change of formation.

MATERIAL	FROM	TO
Yellow sandy clay	0	18
Hardpan	18	69
Coarse sand & gravel, water	69	72
Coarse sand & little gravel	72	75
Coarse gravel & sand	75	78
Hardpan	78	90
Light brown hardpan	90	94
Coarse sand & gravel Water	94	101
Coarse sand & gravel	101	102
Clay coated sand & gravel	102	105
Large gravel & coarse sand	105	111
Large gravel & coarse sand	111	112
Coarse sand & little gravel	112	113
Coarse sand & little pea gravel	113	119
Coarse sand & little gravel	119	122
Coarse sand & some gravel	122	126
Clay coated sand & gravel	126	132

Work started Sept. 17 19 68 Completed Oct. 15, 19 68

WELL DRILLER'S STATEMENT:

This well was drilled under my jurisdiction and this report is true to the best of my knowledge and belief.

NAME Richardson Well Drilling Co., Inc. (Person, firm, or corporation) (Type or print)

Address 219 So. 115th St., Tacoma, Wash. 98444

[Signed] [signature] (Well Driller)

License No. 223-02-6500 Date October 30, 19 68

(USE ADDITIONAL SHEETS IF NECESSARY)

L. F. No. 7256—(Rev. 2-68)—3-68—5M. 4516.

Reg. # 9070
Cert. # 6802

STATE OF WASHINGTON
DEPARTMENT OF CONSERVATION
DIVISION OF WATER RESOURCES

WELL LOG

Record by Driller

Source Driller's Record

Location: State of WASHINGTON

County King

Area

Map

NW ¼ SE ¼ sec. 11 T. 24 N., R. 6 E. W.

Diagram of Section

Drilling Co. Richardson Well Drilling Co., Inc.

Address 219 So. 115th St., Tacoma, Wash. 98444

Method of Drilling Cable Date October 30, 1968

Owner King County Water District No. 121

Address 24256 S.E. 32nd, Rt. 1, Issaquah, WA

Land surface, datum 414 ft. above mean sea level

SWL: 62 ft. Date October 10, 1968 Dims. 12" x 116'

Consolidation	Material	From (feet)	To (feet)
	(Transcribe driller's terminology literally but paraphrase as necessary, in parentheses. If material water-bearing, so state and record static level if reported. Give depths in feet below land-surface datum unless otherwise indicated. Correlate with stratigraphic column, if feasible. Following log of materials, list all casings, perforations, screens, etc.)		
	Municipal		
	Clay, yellow sandy	0	18
	Hardpan	18	69
	Sand, coarse & gravel, water	69	72
	Sand, coarse & little gravel	72	75
	Gravel, coarse & sand	75	78
	Hardpan	78	90
	Hardpan, light brown	90	94
	Sand, coarse & gravel, water	94	101
	Sand, coarse & gravel	101	102
	Sand, clay coated & gravel	102	105
	Gravel, large & sand, coarse	105	111
	Gravel, large & sand, coarse	111	112
	Sand, coarse & little gravel	112	113
	Sand, coarse & little pea gravel	113	119
	Sand, coarse & little gravel	119	122

WELL LOG—Continued 17 No...../.....

Consolidation	Material	From (feet)	To (feet)
	Depth forward		
	Sand, coarse & some gravel	122	126
	Sand, clay coated & gravel	126	132
	Casing: 12" from 0 ft. to 97 ft.		
	Screens: UOP Johnson, Stainless		
	Diam: 12" slot size .080 from 96 ft. to 116 ft.		
	Surface seal: to 20 ft., concrete		
	Pump test: 300 g.p.m. with 11 ft. after 12 h		
	500 g.p.m. with 36 ft. " 12 "		

1449—OS—12-63.

Health
Environmental Health

WATER FACILITIES INVENTORY (WFI)

Read Instructions on back before completing

DATE RECEIVED FEB 1 1994 Ans'd.....
DATE UPDATED 01/12/94

1. SYSTEM ID NO.	2. COUNTY	GROUP	TYPE	WRIA
90027	King	A	COMM	9

3. SYSTEM NAME: SAMMAMISH PLATEAU WATER & SEWER

STREET ADDRESS: 1510 228TH AVE SE.

P.O. BOX (IF APPLICABLE):

CITY: ISSAQUAH STATE: WA ZIP CODE: 98027

4. OWNER'S NAME (LAST, FIRST): SAMMAMISH PLATEAU WATER & OWNER NO. 3007

STREET ADDRESS: 1510 228TH AVE. S.E.

P.O. BOX (IF APPLICABLE):

CITY: ISSAQUAH STATE: WA ZIP CODE: 98027

5. SYSTEM CONTACT PERSON: RONALD E. LITTLE TITLE: MANAGER

DAY TELEPHONE: 206-392-6256 EVENING TELEPHONE:

WFI COMPLETED BY: TITLE:

DAY TELEPHONE: DATE:

8. SUBMITTED FOR: [ ] NEW SYSTEM [ ] NO CHANGE [ ] REACTIVATE [ ] SYSTEM NAME CHANGE* [ ] UPDATE [ ] DELETE

*OLD SYSTEM NAME - ENTER ONLY IF CHANGING WITH THIS WFI

SYSTEMS SERVING ANY RESIDENTS (PEOPLE LIVING IN A DWELLING SERVED BY THE SYSTEM), COMPLETE THIS SECTION

9. NUMBER ACTIVE RESIDENTIAL CONNECTIONS: 8844

10. NUMBER ACTIVE RESIDENTIAL POPULATION: 25,647

SYSTEMS SERVING ANY NON-RESIDENTS (I.E., TRAVELERS, EMPLOYEES, STUDENTS, ETC.), COMPLETE THIS SECTION

11. NUMBER NON-RESIDENTIAL CONNECTIONS:

12. ENTER AVERAGE DAILY NON-RESIDENTIAL POPULATION SERVED FOR EACH MONTH. MAKE ENTRY FOR EACH MONTH

JAN		JULY	
	MAY		NOV.
MAR		SEP	

13. DOES THE SYSTEM SERVE AT LEAST 25 OF THE SAME NON-RESIDENTS FOR 4 OR MORE DAYS PER WEEK FOR AT LEAST 180 DAYS PER YEAR? [ ] YES [X] NO

14. TOTAL NUMBER CONNECTIONS METERED: 8,844

15. DISTRIBUTION RESERVOIR(S) TOTAL CAPACITY: 12,850,000 GALLONS

6. OWNERSHIP (CHECK ONE ONLY)
- [ ] PRIVATE: NON-PROFIT
- [ ] PRIVATE: FOR-PROFIT
- [X] LOCAL GOVERNMENT (COUNTY / CITY / PUD / WATER DISTRICT)
- [ ] STATE
- [ ] FEDERAL

7. PREDOMINANT CHARACTERISTIC (CHECK ONE ONLY)
- [X] RESIDENTIAL
- [ ] RECREATIONAL
- [ ] BUSINESS / INDUSTRIAL / AGRICULTURAL / COMMERCIAL
- [ ] LODGING / FOOD SERVICE
- [ ] SCHOOL / DAY CARE
- [ ] OTHER (CHURCHES, ETC.)

16. DOH SOURCE NUMBER	17. SOURCE NAME (LIST UTILITY'S NAME FOR SOURCE. IF SOURCE IS PURCHASED OR INTERTIED, LIST SELLER'S ID# AND NAME USING FOLLOWING FORMAT: XXXXXX / NAME EXAMPLE: 77050Y / SEATTLE)	18. SOURCE CATEGORY: WELL	WELL FIELD	SURFACE	SPRING	RANNEY / INF. GAL.	INTERTIE	PURCHASE-TREATED	PURCHASE-UNTREATED	19. USE: PERMANENT	SEASONAL	EMERGENCY	20. SOURCE METERED	21. TREATMENT: NONE	CHLORINATION	FILTRATION	FLUORIDATION	OTHER	22. WELL DEPTH (FEET)	23. SOURCE CAPACITY (GPM)	24. SOURCE LOCATION: 1/4, 1/4 SEC.	SEC. NO.	TWP	RNG.	SWTR EVALUATION VOC EVALUATION
001	WELL 1	X								X				X					154	500	SW/NE	10	24N	06E	
002	WELL 2	X									X			X					132	360	NW/SE	11	24N	06E	
003	WELL # 5	X								X					X				716	450	NW/SW	34	25N	06E	
004	WELL # 4	X								X					X				714	625	SW/NW	34	25N	06E	
005	WELL 6	X									X				X				365	600	NE/SE	32	25N	06E	
006	WELL #7	X									X			X					150	2,000	SE/SE	21	24N	06E	
007	WELL #8	X								X				X					150	3,500	SE/SE	21	24N	06E	

MINIMUM REQUIRED BACTERIOLOGICAL SAMPLING SCHEDULE

25.	26. JAN	FEB	MAR	APR	MAY	JUN	JUL	AUG	SEP	OCT	NOV	DEC
	30	30	30	30	30	30	30	30	30	30	30	30

NO. APPROVED SERVICES (PER PLANS): 0 DATE OF LAST SANITARY SURVEY: 0000 BY DOH [ ] LHD [ ]

SYSTEM IN CRITICAL WATER SUPPLY SERVICE AREA? [X] YES [ ] NO GW MGMT AREA? [ ] YES [ ] NO FOR LHD USE ONLY

EFFECTIVE DATE RETRO. CHANGES: SIGNATURE OF DOH REVIEWER: DATE:

WATER SYSTEM

DOH 331-111 (Rev. 5/92)

1989

SAMMAMISH PLATEAU WATER & SEWER DISTRICT

WATER SAMPLE INFORMATION FOR INORGANIC CHEMICAL ANALYSES - 1989

ITEM	WELL 1 8/4/89	WELL 2 4/10/89	WELL 4 4/10/89	WELL 5 4/10/89	WELL 6 7/17/89	WELL 7 7/17/89	WELL 8 4/10/89	*MCL
pH	7.06	7.23	8.22	8.32	7.46	7.48	*7.05	----
Arsenic	*0.010	*0.010	*0.010	*0.010	*0.010	*0.010	*0.010	0.05
Barium	*0.25	*0.25	*0.25	*0.25	*0.25	*0.25	*0.25	1.0
Cadmium	*0.002	*0.002	*0.002	*0.002	*0.002	*0.002	*0.002	0.01
Chromium	*0.010	*0.010	*0.010	*0.010	*0.010	*0.010	*0.010	0.005
Iron	*0.05	*0.05	*0.05	*0.05	*0.05	0.05	*0.05	0.3
Lead	*0.010	*0.010	*0.010	*0.010	*0.010	*0.010	*0.010	0.05
Manganese	*0.010	*0.010	0.041	0.042	0.026	*0.010	*0.010	0.05
Mercury	*0.0010	*0.0010	*0.0010	*0.0010	*0.0010	*0.0010	*0.0010	0.002
Selenium	*0.005	*0.005	*0.005	*0.005	*0.005	*0.005	*0.005	0.01
Silver	*0.010	*0.010	*0.010	*0.010	*0.010	*0.010	0.010	0.05
Sodium	*10	*10	*10	*10	*10	*10	*10	
Hardness	60	87	63	61	48	74	81	
Conductivity	155	220	160	150	120	200	200	700
Turbidity	*0.1	*0.4	*0.2	*0.1	*0.1	0.2	*0.1	1.0
Color	*5.0	*5.0	*5.0	*5.0	*5.0	15.0	*5.0	15.0
Fluoride	*0.2	*0.2	*0.2	*0.2	*0.2	*0.2	*0.2	2.0
Nitrate	1.1	*0.7	*0.2	*0.2	*0.2	1.6	*0.2	10.0
Chloride	*10	*10	*10	*10	*10	*10	*10	250
Sulfate								250

PARTS PER MILLION

*MCL Is the Maximum Contaminant Level Allowed

*Less Than

(Note: Well 7 was re-tested for Iron & Turbidity and those numbers are listed above.)

AnTest/Lab

SAMMAMISH PLATEAU WATER AND SEWER DISTRICT
WATER SAMPLE INFORMATION FOR INORGANIC CHEMICAL ANALYSIS - 1990

ITEM	WELL 1 9/7/90	WELL 2 4/10/89	WELL 4 9/7/90	WELL 5 9/7/90	WELL 6 9/7/90	WELL 7 9/7/90	WELL 8 9/7/90	** MCL
pH	6.74	7.23	7.26	7.74	7.88	7.29	7.12	
Arsenic	<0.010	<0.010	<0.010	<0.010	<0.010	<0.010	<0.010	0.05
Barium	<0.25	<0.25	<0.25	<0.25	<0.25	<0.25	<0.25	1.00
Cadmium	<0.002	<0.002	<0.002	<0.002	<0.002	<0.002	<0.002	0.01
Chromium	<0.010	<0.010	<0.010	<0.010	<0.010	<0.010	<0.010	0.05
Iron	<0.05	<0.05	<0.05	<0.05	<0.05	<0.05	<0.05	0.3
Lead	<0.005	<0.0100	<0.005	<0.005	<0.005	<0.005	<0.005	0.05
Manganese	<0.010	<0.0100	<0.039	<0.037	<0.028	<0.010	<0.010	0.05
Mercury	<0.0010	<0.0010	<0.0010	<0.0010	<0.0010	<0.0010	<0.0010	0.002
Selenium	<0.05	<0.005	<0.005	<0.005	<0.005	<0.005	<0.005	0.01
Silver	<0.010	<0.0100	<0.010	<0.010	<0.010	<0.010	<0.010	0.05
Sodium	<10	<10	<10	<10	<10	<10	<11	
Hardness	79	87	58	58	51	72	72	
Conductivity	85	220	150	154	125	189	188	700
Turbidity	<0.2	<0.4000	<0.1	<0.1	<0.2	<0.1	<0.9	1.0
Color	<5.0	<5.0	<10.0	<10.0	<5.0	<5.0	<10.	15
Fluoride	<0.2	<0.2000	<0.2	<0.2	<0.2	<0.2	<0.2	2.0
Nitrate	<1.3	<0.7000	<0.2	<0.2	<0.2	<0.2	<1.3	10.0
Chloride	<10	<10	<10	<10	<10	<10	<10	250

PARTS PER MILLION

\< Less than Detectable Limits

** Maximum Contaminant Level

SAMMAMISH PLATEAU WATER AND SEWER DISTRICT
WATER SAMPLE INFORMATION FOR INORGANIC CHEMICAL ANALYSIS - 1991

ITEM	WELL 1 7/12/91	WELL 2 7/12/91	WELL 4 7/12/91	WELL 5 7/12/91	WELL 6 7/12/91	WELL 7 7/12/91	WELL 8 7/12/91	** MCL
pH	6.6	6.4	7.3	6.7	6.7	7.1	6.8	
Arsenic	<0.010	<0.010	<0.010	<0.010	<0.010	<0.010	<0.010	0.05
Barium	<0.25	<0.25	<0.25	<0.25	<0.25	<0.25	<0.25	1.00
Cadmium	<0.002	<0.002	<0.002	<0.002	<0.002	<0.002	<0.002	0.01
Chromium	<0.010	<0.010	<0.010	<0.010	<0.010	<0.010	<0.010	0.05
Iron	<0.05	<0.05	<0.05	<0.05	<0.05	<0.05	<0.05	0.3
Lead	<0.005	<0.005	<0.005	<0.005	<0.005	<0.005	<0.005	0.05
Manganese	<0.010	<0.010	<0.018	<0.026	<0.023	<0.010	<0.010	0.05
Mercury	<0.0010	<0.010	<0.0010	<0.0010	<0.0010	<0.0010	<0.0010	0.002
Selenium	<0.005	<0.005	<0.005	<0.005	<0.005	<0.005	<0.005	0.01
Silver	<0.010	<0.010	<0.010	<0.010	<0.010	<0.010	<0.010	0.05
Sodium	7.	6.	9.	8	5	10	12	
Hardness	61	66	52	51	43	61	75	
Conductivity	180	270	120	130	120	190	210	700
Turbidity	0.2	0.6	.4	<0.3	.3	.4	0.3	1.0
Color	<5.0	<5.0	<5.0	<5.0	<5.0	<5.0	<5.	15
Fluoride	<0.2	<0.2	<0.2	<0.2	<0.2	<0.2	<0.2	
Nitrate	1.2	<1.9	1.8	<0.2	<0.2	<0.2	1.3	
Chloride	<10	<10	<10	<10	21	24	<10	

SAMMAMISH PLATEAU WATER AND SEWER DISTRICT
WATER SAMPLE INFORMATION FOR INORGANIC CHEMICAL ANALYSIS - 1992

ITEM	WELL 1 2/14/92	WELL 2 2/14/92	WELL 4 2/14/92	WELL 5 2/14/92	WELL 6 2/14/92	WELL 7 2/14/92	WELL 8 7/12/91	** MCL
pH	7.0	7.3	7.93	8.4	8.4	7.7	6.8	
Arsenic	<0.010	<0.01	<0.01	<0.01	<0.01	<0.01	<0.010	.05
Barium	<0.1	<0.1	<0.1	<0.1	<0.1	<0.1	<0.25	1.00
Cadmium	<0.002	<0.002	<0.002	<0.002	<0.002	<0.002	<0.002	0.01
Chromium	<0.05	<0.05	<0.05	<0.05	<0.05	<0.05	<0.010	0.05
Iron	<0.05	<0.05	<0.05	<0.05	0.37	<0.05	<0.05	0.3
Lead	<0.002	<0.002	<0.0025	<0.002	<0.002	<0.002	<0.005	0.05
Manganese	<0.01	<0.01	0.043	<0.041	0.038	<0.01	<0.010	0.05
Mercury	<0.0002	<0.0002	<0.0002	<0.0002	<0.0002	<0.0002	<0.0010	0.002
Selenium	<0.005	<0.005	<0.005	<0.005	<0.005	<0.005	<0.005	0.01
Silver	<0.01	<0.01	<0.01	<0.01	<0.01	<0.01	<0.010	0.05
Sodium	9.5	6.1	8.7	8.4	4.8	10	12	
Hardness	85.	75	62	62	56	79	75	
Conductivity	180.	150	140	140	120	170	210	700
Turbidity	0.46	0.42	.33	0.32	.90	.32	0.3	1.0
Color	<5.0	<5.0	<5.0	<5.0	<5.0	<5.0	<5.	15
Fluoride	<0.5	<0.5	<0.5	<0.5	<0.5	<0.5	<0.2	2
Nitrate	1.0	<1.8	<1.0	<1.0	<1.0	<1.0	1.3	10
Chloride	<20.	<20	<20	<20	<20	<20	<10	250
Sulfate	10.	<10.	<10.	<10	<10	11		250
Copper	<0.02	<0.02	<0.02	<0.02	<0.02	<0.02		1.0
Zinc	<0.05	<0.05	<0.05	<0.05	<0.05	<0.05		5.0
Aluminum	<5.0	<5.0	<5.0	<5.0	<5.0	<5.0		
Calcium	19.	18.	18	18	16	20.		

SAMMAMISH PLATEAU WATER AND SEWER DISTRICT
WATER SAMPLE INFORMATION FOR INORGANIC CHEMICAL ANALYSIS - 1993

ITEM	WELL 1	WELL 2	WELL 4	WELL 5	WELL 6	WELL 7	WELL 8	WELL 9	** MCL
	3-2-93	3-2-93	3-2-93	3-2-93	3-2-93	3-2-93	3-2-93	3-2-93	
Arsenic	< 0.01	< 0.01	< 0.01	< 0.01	< 0.01	< 0.01	< 0.01	< 0.01	0.05
Barium	< 0.1	< 0.1	< 0.1	< 0.1	< 0.1	< 0.1	< 0.1	< 0.1	1
Cadmium	< 0.002	< 0.002	< 0.002	< 0.002	< 0.002	< 0.002	< 0.002	< 0.002	0.01
Chromium	< 0.05	< 0.05	< 0.05	< 0.05	< 0.05	< 0.05	< 0.05	< 0.05	0.05
Copper	< 0.02	< 0.02	< 0.02	< 0.02	< 0.02	< 0.02	< 0.02	< 0.02	1.3
Iron	< 0.05	< 0.05	< 0.05	< 0.05	< 0.05	< 0.05	< 0.05	< 0.17	0.3
Lead	< 0.002	< 0.002	< 0.002	< 0.002	< 0.002	< 0.002	< 0.002	< 0.002	0.05
Manganese	< 0.01	< 0.01	< 0.043	< 0.041	< 0.092	< 0.01	< 0.01	< 0.01	0.05
Mercury	< 0.0002	< 0.0002	< 0.0002	< 0.0002	< 0.0002	< 0.0002	< 0.0002	< 0.0002	0.002
Selenium	< 0.005	< 0.005	< 0.005	< 0.005	< 0.005	< 0.005	< 0.005	< 0.005	0.01
Silver	< 0.01	< 0.01	< 0.01	< 0.01	< 0.01	< 0.01	< 0.01	< 0.01	0.05
Sodium	9.1	9.3	9.0	7.7	8.4	9.5	10.	8.5	
Zinc	< 0.05	< 0.05	< 0.05	< 0.05	< 0.05	< 0.05	< 0.05	< 0.05	5
Hardness	78.	80	65	65	93	79	75	68	
Conductivity	190	150	160	150	210	190	190	160	700
Turbidity	0.10	0.49	0.17	0.15	0.1	0.1	0.14	0.43	1
Color	5.	5.	5.	5.	5.	5.	5.	5.	15
Chloride	< 20	< 20	< 20	< 20	< 20	< 20	< 20	< 20	250
Fluoride	< 0.5	< 0.5	< 0.5	< 0.5	< 0.5	< 0.5	< 0.5	< 0.5	2
Nitrate	< 1.0	< 1.0	< 1.0	< 1.0	< 1.0	< 1.0	< 1.1	< 1.0	10
Sulfate	< 10	< 10	< 10	< 13	< 10	< 10	< 10	< 10	250

LEGEND

< Less Than Detectable Limits

** Maximum Contaminant Level

GROUND WATER CONTAMINATION
Susceptibility Assessment Survey Form

SAMMAMISH PLATEAU WATER & SEWER DISTRICT
1510 – 228TH Avenue SE
Sammamish, Washington 98075

(425) 392-6256

WELL 2.2

GROUND WATER CONTAMINATION
Susceptibility Assessment Survey Form

TABLE OF CONTENTS

- Susceptibility Assessment Survey Form
- Well 2.2 Calculated Fixed Radius – FYI
- Water Well Report
- Well 2.2 Hydrogeologic Log and Construction Details
- Wellhead Protection Program for Plateau and Cascade View Well Report Information
    - Aquifer Zone II definition
    - WHPAs and Potential Contaminants
    - Figure 4.1 - WHPA Capture Zones
- Water Sample Tests
    - Water Bacteriological Analysis – 5/21/96
    - Inorganic Chemical Analysis – 5/21/96
    - Water Sample Information for Radiation Chemical Analyses – 5/21/96
    - ICP Metals – 5/21/96

Ground Water Contamination
Susceptibility Assessment Survey Form
Version 2.2

IMPORTANT! Please complete one form for each ground water source (well, well field, spring) used in your water system. Photocopy as necessary.

PART I: System Information

Well owner/manager: **Sammamish Plateau Water & Sewer District**

Water system name: **Sammamish Plateau Water & Sewer District**

County: **King**

Water system number: **409009** Source number: _____

Well depth: **180** (ft.) (From WFI form)

Source name: **Well 2.2**

WA well identification tag number: **AAD383**

_____ well not tagged

Number of connections: **14358** Population served: **48,036**

Township: **24N** Range: **06E**

Section: **11** 1/4 1/4 Section: **NW/SW**

Latitude/longitude (if available): _____ / _____

How was lat./long. determined?

_____ global positioning device _____ survey _____ topographic map
___ other: _____

* Please refer to Assistance Packet for details and explanations of all questions in Parts II through V.

PART II: Well Construction and Source Information

1) Date well originally constructed: **05 / 09 / 96** month/day/year

_____ last reconstruction: ___/___/___ month/day/year

_____ information unavailable

2) Well driller: **Holt Drilling, Inc.**

___ well driller unknown

3) Type of well:

_X_ **Drilled**: ___ rotary ___ bored _X_ cable (percussion) ___ Dug

___ **Other**: ___ spring(s) ___ lateral collector (Ranney)

___ driven ___ jetted ___ other:

Additional comments: _____

4) Well report available? _X_ YES (attach copy to form) ___ NO

If no well log is available, please attach any other records documenting well construction; e.g. boring logs, "as built" sheets, engineering reports, well reconstruction logs.

5) Average pumping rate: **500** (gallons/min)

Source of information: **Recharge/Production Well 2.2 Construction and Testing Report**

If not documented, how was pumping rate determined? _____

_____ Pumping rate unknown

6) Is this source treated?

If so, what type of treatment:

___ disinfection _X_ filtration ___ carbon filter ___ air stripper _X_ other

Purpose of treatment (describe materials to be removed or controlled by treatment):

The water is chlorinated and filtered to remove Manganese. The water is also treated with sodium hydroxide (NaOH) for corrosion control.

7) If source is chlorinated, is a chlorine residual maintained: _X_ YES ___ NO

Residual level: **minimum 0.3ppm free after the filters** *(At the point closest to the source.)*

PART III: Hydrogeologic Information

1) Depth to top of open interval: [check one]

__ < 20 ft __ 20–50 ft __ 50–100 ft X 100–200 ft __ >200 ft

__ information unavailable ('<' means less than; '>' means greater than)

2) Depth to ground water (static water level):

__ < 20 ft __ 20–50 ft X 50–100 ft __ >100 ft

__ flowing well/spring (artesian)

How was water level determined?

X well log __ other: _____

__ depth to ground water unknown

3) If source is a flowing well or spring, what is the confining pressure:

_____ psi (pounds per square inch)
or
_____ feet above wellhead

4) If source is a flowing well or spring, is there a surface impoundment, reservoir, or catchment associated with this source: __ YES __ NO

5) Wellhead elevation (height above mean sea level): 420 (ft)

How was elevation determined?
X topographic map __ Drilling/Well Log __ altimeter

__ other: _____

__ information unavailable

6) Confining layers: (This can be completed only for those sources with a drilling log, well log or geologic report describing subsurface conditions. Please refer to assistance package for example.)

X evidence of a confining layer in well log

__ no evidence of a confining layer in well log

If there is evidence of a confining layer, is the depth to ground water more than 20 feet above the bottom of the lowest confining layer? X YES __ NO

__ information unavailable

7) Sanitary setback:

__ < 100 ft* _X_ 100–120 ft __ 120–200 ft __ > 200 ft
* if less than 100 ft describe the site conditions:

The well is drilled approximately 68 feet from the eastern property line, which is the right of way line of Beaver Lake Drive. However, the roadway was relocated and the ditchline and roadbed are more then 100 feet from the well.

8) Wellhead construction:

_X_ wellhead enclosed in a well house

_X_ controlled access (describe): **The well is locked in a shelter that is monitored.**

__ other uses for well house (describe): _____

__ no wellhead control

9) Surface seal:

__ 18 ft

__ < 18 ft (no Department of Ecology approval) ('<' means less than)

__ < 18 ft (Approved by Ecology, include documentation) ('<' means less than)

_X_ > 18 ft ('>' means greater than)

__ depth of seal unknown

__ no surface seal

10) Annual rainfall (inches per year):

__ < 10 in/yr __ 10–25 in/yr _X_ > 25 in/yr

PART IV: Mapping Your Ground Water Resource

1) Annual volume of water pumped: **261,000,000** (gallons)

How was this determined?

__ meter

__ estimated: __ pumping rate (_____)

__ pump capacity (_____)

_X_ other: **Water rights**

2) "Calculated Fixed Radius" estimate of ground water movement:
(see Instruction Packet)

6 month ground water travel time: **1,390** (ft)

1 year ground water travel time: **1,970** (ft)

5 year ground water travel time: **4,400** (ft)

10 year ground water travel time: **6,220** (ft)

Information available on length of screened/open interval?

_X_ YES __ NO

Length of screened/open interval: **25** (ft)

These are the CFR's per this packet. The District has additional Well Head Protection Area (WHPA) Capture Zone information, which is attached. The following questions are answered for the capture zones identified on the WHPA map.

3) Is there a river, lake, pond, stream, or other obvious surface water body within the 6-month time of travel boundary? _X_ YES __ NO (mark and identify on map).

There are two wetlands located on the Well 2.2 property. One wetland is approximately 120-feet to the northwest and the other approximately 60-feet to the southeast.

4) Is there a storm water and/or wastewater facility, treatment lagoon, or holding pond located within the 6-month time of travel boundary? __ YES _X_ NO (mark and identify on map).

Comments: **Septic Systems serve the homes to the north of SE 32nd Way and west of Beaver Lake Drive and are within the 6-month time of travel boundary. Gravity sewers serve the areas to the south of SE 32nd Way and east of Beaver Lake Drive.**

PART V: Assessment of Water Quality

1) Regional sources of risk to ground water:

Please indicate if any of the following are present within a circular area around your water source having a radius up to and including the five year ground water travel time:

	6 month	1 year	5 year	unknown
likely pesticide application				X
stormwater injection wells	**No**	**No**	**No**	
other injection wells **(see comments)**	**No**	**No**	**No**	
abandoned ground water well				X
landfills, dumps, disposal areas	**No**	**No**	**No**	
known hazardous materials clean-up site	**No**	**No**	**No**	
water system(s) with known quality problems				X
population density > 1 house/acre	**4 house / acre**			
residences commonly have septic tanks	**Yes**	**No**	**No**	
Wastewater treatment lagoons	**No**	**No**	**No**	
sites used for land application of waste	**No**	**No**	**No**	

Mark and identify on map any of the risks listed above which are located within the 6 month time of travel boundary? *(Please include a map of the wellhead and time of travel areas with this form. Please locate and mark any of the following.)*

If other recorded or potential sources of ground water contamination exist within the ten year time of travel circular zone around your water supply, please describe:

Well 2.1 has been used as an injection well as part of a groundwater recharge project. System, or domestic, water was used in the project.

Septic systems serve the homes to the north of SE 32nd Way and west of Beaver Lake Drive.

2) Source specific water quality records:

Please indicate the occurrence of any test results since 1986 that meet the following conditions (Unless listed on assessment, MCLs are listed in assistance package):

A. Nitrate: (Nitrate MCL = 10 mg/l)	YES	NO
Results greater than MCL		X
< 2 mg/liter nitrate	X	
2–5 mg/liter nitrate		X
> 5 mg/liter nitrate		X
Nitrate sampling records unavailable		X

B. VOCs: (VOC detection level 0.5 ug/l or 0.0005 mg/l.)	YES	NO
Results greater than MCL or SAL		X
VOCs detected at least once		X
VOCs never detected	X	
VOC sampling records unavailable		X

C. EDB/DBCP:	YES	NO
(EDB MCL = 0.05 ug/l or 0.00005 mg/l. DBCP MCL = 0.2 ug/l or 0.0002 mg/l.)		
EDB/DBCP detected below MCL at least once		X
EDB/DBCP detected above MCL at least once		X
EDB/DBCP never detected		X
EDB/DBCP tests required but not yet completed		X
EDB/DBCP tests not required	X	

D. Other SOCs (Pesticides):	YES	NO
Other SOCs detected		X
(pesticides and other synthetic organic chemicals)		X
Other SOC tests performed but none detected * (list test methods in comments)		X
Other SOC tests not performed	X	

If any SOCs in addition to EDB/DBCP were detected, please identify and date. If other SOC tests were performed, but no SOCs detected, list test methods here: _____

_____

_____

_____

_____

E. Bacterial contamination:	YES	NO
Any bacterial detection(s) in the past 3 years in samples taken from the source (not distribution sampling records).		X
Has source (in past 3 years) had a bacteriological contamination problem found in distribution samples that was attributed to the source.		X
Source sampling records for bacteria unavailable		X

Part VI: Geographic or Hydrologic Factors Contributing to a Non-Circular Zone of Contribution

The following questions will help identify those ground water systems which may not be accurately represented by the calculated fixed radius (CFR) method described in Part IV. For these sources, the CFR areas should be used as a preliminary delineation of the critical time of travel zones for that source. As a system develops its Wellhead Protection Plan for theses sources, a more detailed delineation method should be considered.

1) Is there evidence of obvious hydrologic boundaries within the 10-year time of travel zone of the CFR? (Does the largest circle extend over a stream, river, lake, up a steep hillside, and/or over a mountain or ridge?)

X YES _____ NO

Describe with references to map produced in Part IV:

There are streams feeding and discharging from Yellow Lake, in the 5 year capture zone, although Yellow Lake is outside the capture zone. There is also a ravine located at the southern edge of the five and ten year capture zones.

2) Aquifer Material:

A) Does the drilling log, well log or other geologic/engineering reports identify that the well is located in an area where the underground conditions are identified as fractured rock and/or basalt terrain?

_____ YES X NO

B) Does the drilling log, well log or other geologic/engineering reports indicate that the well is located in an area where the underground conditions are primarily identified as coarse sand and gravel?

X YES _____ NO

3) Is the source located in an aquifer with a high horizontal flow rate? (These can include sources located on flood plains of large rivers, artesian wells with high water pressure, and/or shallow flowing wells and springs.)

_____YES __X__NO

4) Are there other high capacity wells (agricultural, municipal and/or industrial) located within the CFRs?
__X__YES _____NO

a) Presence of ground water extraction wells removing more than approximately 500 gal/min within...

	YES	NO	unknown
< 6 month travel time		X	
6 month–1 year travel time	X		
1–5 year travel time	X		
5–10 year travel time		X	

b) Presence of groundwater recharge wells (dry wells) or heavy irrigation within...

	YES	NO	unknown
< 1 year travel time	X		
1–5 year travel time		X	
5–10 year travel time		X	

Please identify or describe additional hydrologic or geographic conditions that you believe may affect the shape of the zone of contribution for this source. Where possible, reference them to locations on the map produced in Part IV.

The Wellhead Protection Program for Plateau and Cascade View Wells Report prepared in June 24, 1998 for the Sammamish Plateau Water & Sewer District discussed the ground water flow for the Plateau Area wells. The ground water flow directions within each aquifer were evaluated using static water levels from well completed within the aquifers. Well 2.2 is in aquifer zone II, which is made up of three subzones; IIa, IIb, and IIc. The top of zone II occurs at elevations of approximately 350 to 160 feet above MSL. Zone II thickness ranges from 5 to 150 feet. A potentiometer surface map for wells completed in Zone II shows that ground water flow is generally to the northwest or northeast direction.

The WHPA for aquifer zone II is attached and is used to answer the questions in this survey.

Suggestions and Comments

Did you attend one of the susceptibility workshops? ______YES __X___NO

Did you find it useful? ______YES ______NO

Did you seek outside assistance to complete the assessment? __X__YES ______NO

- -

This form and instruction packet are still in the process of development. Your comments, suggestions and questions will help us upgrade and improve this assessment form. If you found particular sections confusing or problematic please let us know. How could this susceptibility assessment be improved or made clearer? Did the instruction package help you find the information needed to complete the assessment? How much time did it take you to complete the form? Were you able to complete the assessment without additional/outside expertise? Do you feel the assessment was valuable as a learning experience? Any other comments or constructive criticisms you have would be appreciated.

Sammamish Plateau Water and Sewer District
Well 2.2
"Calculated Fixed Radius" Water Travel Times
FOR INFORMATION ONLY (WHPA USED FOR ANALYSIS)

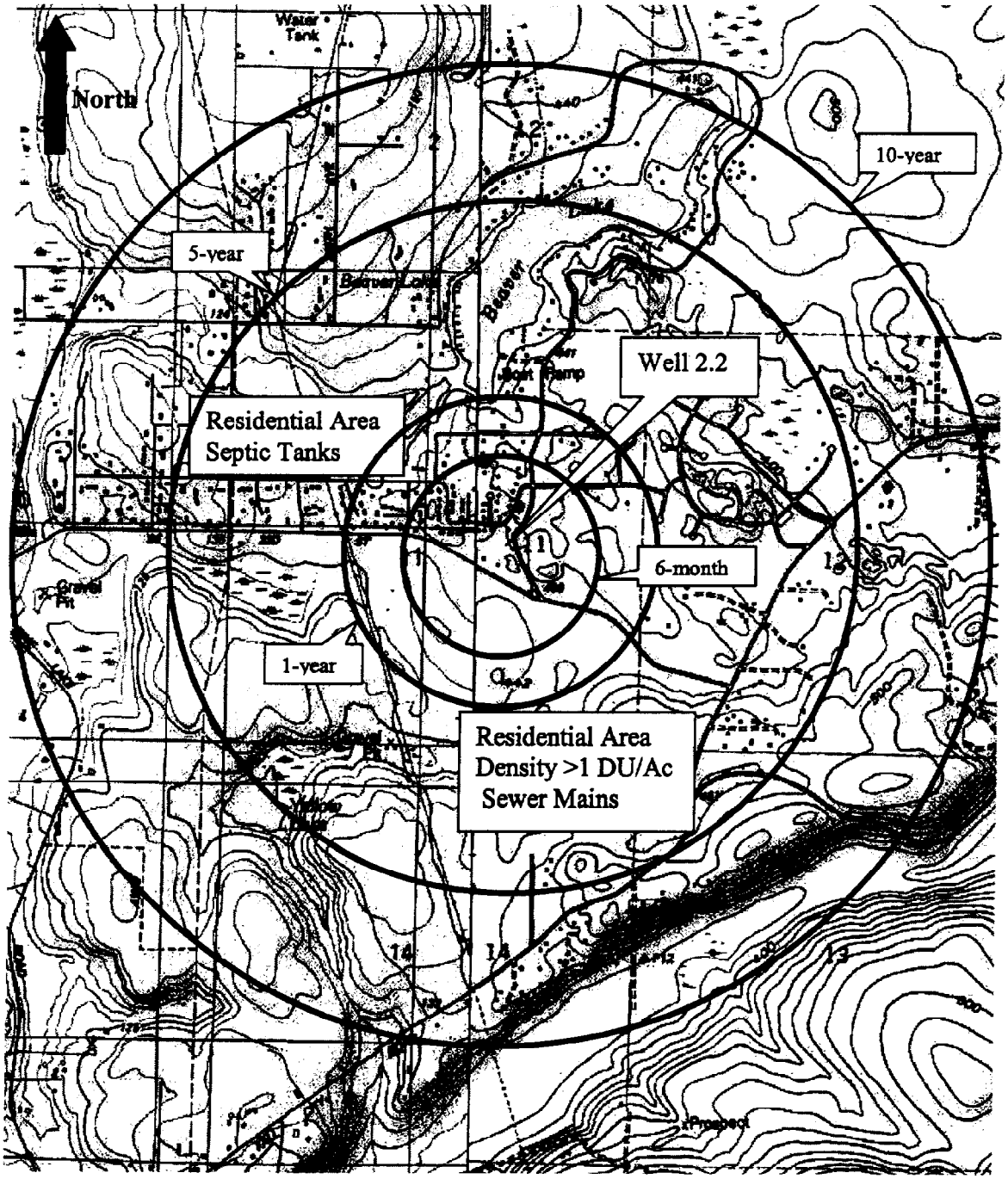

Scale: 1" = 2,000'
Ground Water Travel Times shown:
6 month, 1 year, 5 year and 10 year

File Original and First Copy with Department of Ecology
Second Copy—Owner's Copy
Third Copy—Driller's Copy

WATER WELL REPORT

STATE OF WASHINGTON

Start Card No. W 16281

UNIQUE WELL I.D. #AAD383

Water Right Permit No. _____

(1) OWNER: Name Sammamish Plateau Water and Sewer District Address 1510 228th Avenue SE, Issaquah, WA 98029

(2) LOCATION OF WELL: County King, NW ¼ SE ¼ Sec. 11 T. 24 N., R. 6E W.M.

(2a) STREET ADDDRESS OF WELL (or nearest address) 3401 East Beaver Lake Drive

(3) PROPOSED USE: ☐ Domestic ☐ Irrigation ☐ DeWater Industrial ☐ Test Well ☐ Municipal ☒ Other ☐

(4) TYPE OF WORK: Owner's number of well (if more than one) 2.2

Abandoned ☐ New well ☒ Deepened ☐ Reconditioned ☐ Method: Dug ☐ Cable ☒ Rotary ☐ Bored ☐ Driven ☐ Jetted ☐

(5) DIMENSIONS: Diameter of well 16 inches.

Drilled 182 feet. Depth of completed well 180 ft.

(6) CONSTRUCTION DETAILS:

Casing installed: 16" Diam. from +2 ft. to 149 ft.

Welded ☒ _____" Diam. from _____ ft. to _____ ft.

Liner installed ☐ _____" Diam. from _____ ft. to _____ ft.

Threaded ☐

Perforations: Yes ☐ No ☒

Type of perforator used _____

SIZE of perforations _____ in. by _____ in.

_____ perforations from _____ ft. to _____ ft.

_____ perforations from _____ ft. to _____ ft.

_____ perforations from _____ ft. to _____ ft.

Screens: Yes ☒ No ☐

Manufacturer's Name Johnson

Type 304 Stainless Variable Model No. TS

Diam. 16" Slot size 0.030 to 0.050 from 150 ft. to 155 ft.

Diam. 16" Slot size 0.050 from 155 ft. to 170 ft.

16" 0.040 from 170 ft. to 175 ft.

Gravel packed: Yes ☐ No ☒ Size of gravel _____

Gravel placed from _____ ft. to _____ ft.

Surface seal: Yes ☒ No ☐ To what depth? 32 ft.

Material used in seal Cement/Bentonite

Did any strata contain unusable water? Yes ☐ No ☒

Type of water? _____ Depth of strata _____

Method of sealing strata off _____

(7) PUMP: Manufacturer's Name _____

Type: _____ H.P. _____

(8) WATER LEVELS: Land-surface elevation above mean sea level approx. 417 ft.

Static level 63.8 ft. below top of well Date 5-9-96

Artesian pressure _____ lbs. per square inch Date _____

Artesian water is controlled by _____ (Cap, valve, etc.)

(9) WELL TESTS: Drawdown is amount water level is lowered below static level

Was a pump test made? Yes ☒ No ☐ If yes, by whom? AGI

Yield: 500 gal./min. with 44.59 ft. drawdown after 24 hrs.

" " " "

" " " "

Recovery data (time taken as zero when pump turned off) (water level measured from well top to water level)

Time	Water Level	Time	Water Level	Time	Water Level
1 min	84.65	5 min	80.50	60 min	66.67
2 min	83.10	10 min	77.32	125 min	64.98
3 min	82.18	20 min	73.11	203 min	64.56

Date of test 5-20 to 21-96

Bailer test _____ gal./min. with _____ ft. drawdown after _____ hrs.

Airtest _____ gal./min. with stem set at _____ ft. for _____ hrs.

Artesian flow _____ g.p.m. Date _____

Temperature of water 51°F Was a chemical analysis made? Yes ☒ No ☐

(10) WELL LOG or ABANDONMENT PROCEDURE DESCRIPTION

Formation: Describe by color, character, size of material and structure, and show thickness of aquifers and the kind and nature of the material in each stratum penetrated, with at least one entry for each change of information.

MATERIAL	FROM	TO
Fill material	0	8
Yellow silty sand grading from fill-clay	8	23
Tan-gray silt-bound sand and gravel	23	68
Brown coarse sand w/gravel increasing w/dth	68	78
Gray-tan Till	78	96
Gray sand & grvl w/large cobbles, w-bearing	96	103
Gray Till	103	114
Gray to brwn coarse sand & grvl, w-bearing	114	132
Gray fine to medium coarse sand w/silt	132	147
Gray coarse sand & gravel, water-bearing	147	175
Gray silty clay w/little gravel	175	182

Work started April 16, 1996 19. Completed May 9, 1996

WELL CONSTRUCTOR CERTIFICATION:

I constructed and/or accept responsibility for construction of this well, and its compliance with all Washington well construction standards. Materials used and the information reported above are true to my best knowledge and belief.

NAME Holt Drilling 10621 Todd Road East (PERSON, FIRM, OR CORPORATION) (TYPE OR PRINT)

Address Puyallup, WA 98372

(Signed) Randy Holt (WELL DRILLER) License No. 1099

Contractor's Registration No. HOLTTI6 6870J Date 7-9, 1996

(USE ADDITIONAL SHEETS IF NECESSARY)

ECY 050-1-20 (10/87) -1329- 18

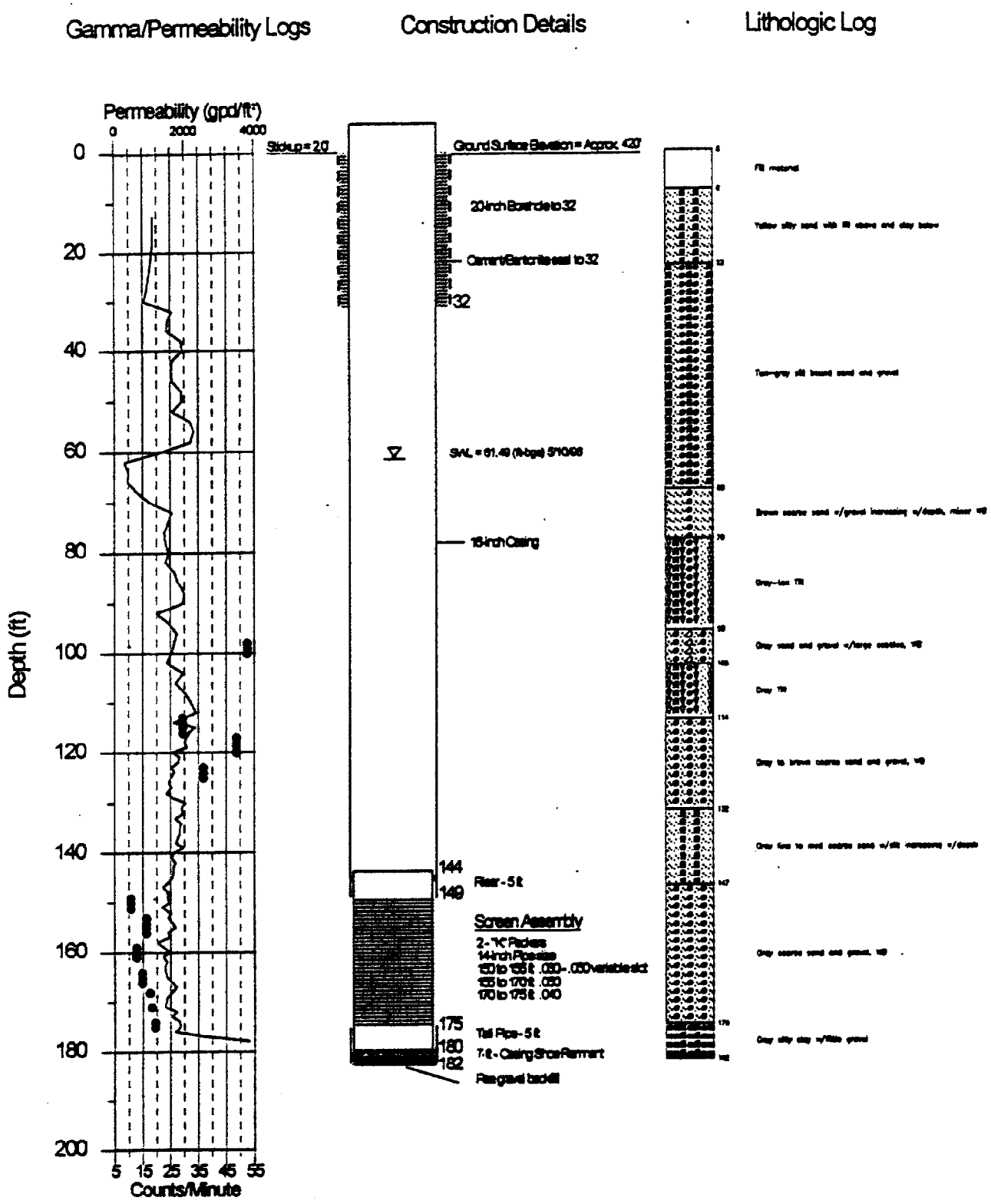

AGI TECHNOLOGIES

Sammamish Plateau Water and Sewer District
Project # 15,287.008

Well 2.2 Hydrogeologic Logs and Construction Details

Figure 2

completed in three of the four aquifers that lie beneath the Plateau Upland: Zones II, III, and IV.

Aquifer Zone II - Plateau Wells 1R, 2, 10, and Proposed Wells 2.2, 15, and 16

- Aquifer Zone II transmissivity ranges between 5,000 and 300,000 gallons per day per foot (gpd/ft), and thickness ranges between 5 and 150 feet.
- The aquifer system is bounded by the Plateau margins to the north, east, and west, and a bedrock boundary exists to the south and southeast of the North Fork Channel.
- The central portion of the Plateau near the North Fork receives most of the recharge. The general direction of ground water flow in Aquifer Zone II is northward between District Wells 10 and 15. North of District Well 10, ground water flows east and west toward the Plateau margins.
- The hydraulic gradient in Aquifer Zone II is approximately 0.001 to 0.002 between District Wells 10 and 15.

Aquifer Zone III Plateau Wells 6 and 11.1

- Aquifer Zone III transmissivity ranges between 11,000 and 45,000 gpd/ft, and thickness ranges between 20 and 100 feet.
- Data are insufficient to determine aquifer boundaries; however, it is likely the aquifer is bounded by bedrock to the south near the North Fork Channel.
- The aquifer is recharged in the central portion of the Plateau. The direction of ground water flow is away from the north-south ground water divide and appears to be eastward in the vicinity of Well 11.1. At Well 6, ground water flows to the west.
- The hydraulic gradient in Aquifer Zone III is approximately 0.001 eastward at Well 11.1 and approximately 0.003 westward at Well 6.

Aquifer Zone IV Plateau Wells 4, 5, and 11.2

- Aquifer Zone IV transmissivity ranges between 14,000 and 42,000 gpd/ft, and thickness ranges between 90 and 200 feet.

4.3.3 Additional Data Needs

To maintain the inventory of potential sources of contamination, the following data need to be collected and included during future risk analysis updates:

- Status of previously identified potential contamination sources
- New potential contamination sources

4.4 WHPAs AND POTENTIAL CONTAMINANTS

Figures 4.1 through 4.6 show the WHPAs delineated for the District's production wells and the location of potential contaminant sources. Each WHPA and the risk from potential contaminant sources are described in the following sections.

4.4.1 Plateau Aquifer Zone II

WHPAs for District Wells 1R, 2.1, 2.2, 10, 15, and 16 are contiguous, so they were evaluated as one well field; the composite WHPA is shown in Figure 4.1. From the proposed District Well 16 location at the northern limit, the combined WHPA fans over 30,000 feet to the south-southwest and over 22,000 feet to the southeast. The Klahanie housing development, two regional thoroughfares, one powerline, and one gas line lie within this WHPA. Potential sources of contamination, identified by yellow numbers on Figure 4.1, include:

No. 8 - Natural gas line right-of-way where herbicides may be used for maintenance.

No. 10 - Active fire station which has an active diesel underground storage tank.

No. 11 - Powerline right-of-way where herbicides may be used for maintenance.

No. 12 - Regional thoroughfare where hazardous materials may be spilled in a truck accident and where herbicides may be used for maintenance.

No. 29 - Junior High School where degreasers and cleaners are used for maintenance.

No. 32 - Sanitary sewer pipes which could break and leak contents (not identified by a yellow number on Figure 4.1 because of the widespread nature of potential source).

No. 33 - Residential septic systems which could either overflow or leak and discharge to soil before adequate biodegradation occurs (not identified by a yellow number on Figure 4.1 because of the widespread nature of potential source).

Risk assessment for the above activities shows no high or medium-risk activities.

4.4.2 Plateau Aquifer Zone III

District Wells 6 and 11.1 were evaluated separately because they are not contiguous, as shown on Figure 4.2. The Well 6 WHPA extends approximately 3,600 feet to the east in a relatively narrow, 500-foot wide fan. No potential sources of contamination were located within or near this WHPA. The Well 11.1 WHPA extends approximately 2,000 feet uniformly in a radial pattern and encompasses the Sammamish Plaza shopping complex. Potential sources of contamination identified by yellow numbers on Figure 4.2 include:

No. 1 - Removed underground storage tank, which is not on the Department of Ecology (DOE) leaking underground storage tank list.

No. 2 - Location of illegal drug laboratory, which was removed from the DOE contaminated site list.

No. 3 - Inglewood Junior High School, which may store hazardous laboratory chemicals which could spill.

No. 4 - Removed underground storage tank, which is not on the DOE leaking underground storage tank list.

No. 6 - Active underground storage tanks, which are not on the DOE leaking underground storage tank list.

No. 7 - Removed underground storage tank, which is on the DOE leaking underground storage tank list.

No. 8 - Natural gas line right of way where herbicides may be used for maintenance.

No. 9 - One active and one removed underground storage tank, which are on the DOE leaking underground storage tank list.

No. 11 - Powerline right-of-way where herbicides may be used for maintenance.

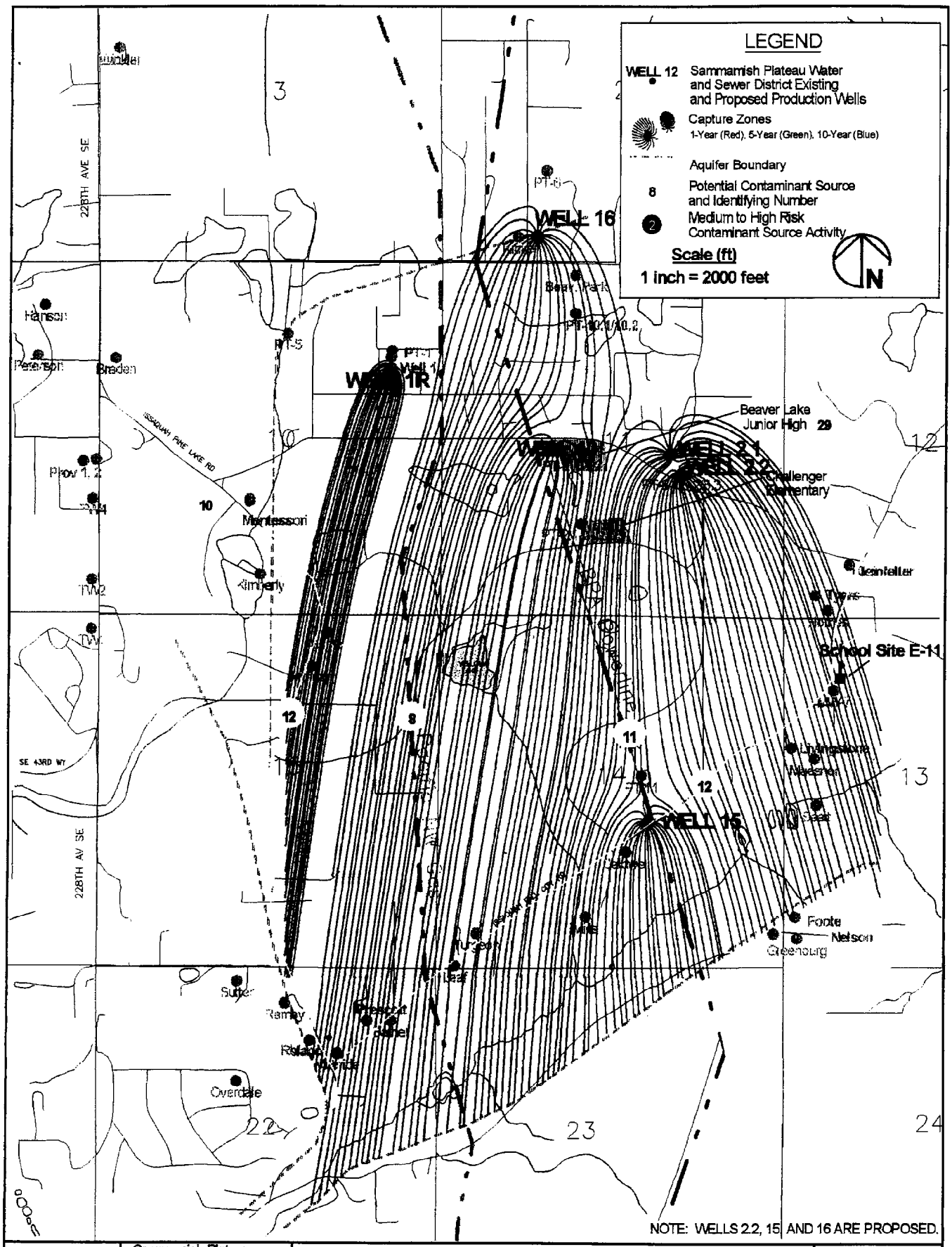

AGI TECHNOLOGIES

Sammamish Plateau Water and Sewer District
Wellhead Protection
Project No. - 15,287.015

Wellhead Protection Areas
Composite Aquifer Zone II - Plateau Area

Figure 4.1
D:\coffey\plat-whp\fig1-6.grf

SOUND ANALYTICAL SERVICES

4813 PACIFIC HWY. E. TACOMA, WA 98424

(206) 922-2310 FAX (206) 922-5047

WATER BACTERIOLOGICAL ANALYSIS

SAMPLE COLLECTION: READ INSTRUCTIONS ON BACK OF GOLDENROD COPY
If instructions are not followed, sample will be rejected.

DATE COLLECTED (MONTH / DAY / YEAR)	TIME COLLECTED	COUNTY NAME
5/28/10	15:02 ☐ AM ☑ PM	King

TYPE OF SYSTEM: ☑ PUBLIC ☐ INDIVIDUAL (serves only 1 residence)

IF PUBLIC SYSTEM, COMPLETE: TAN NUMBER [redacted] CIRCLE GROUP (A) B

NAME OF SYSTEM: PUSD Well 3,2

SPECIFIC LOCATION WHERE SAMPLE COLLECTED (ie, kitchen tap @ school, fire station, fountain): change c 6x5" orifice

TELEPHONE NO. DAY ( ) [illegible] EVENING ( )

SAMPLE COLLECTED BY: (Name): Jeff E Coffey/AGI

SYSTEM OWNER/MANAGER: (Name): Ron Little

SOURCE TYPE: ☐ GROUND WATER UNDER SURFACE INFLUENCE
☐ SURFACE ☑ WELL or WELL FIELD ☐ SPRING ☐ PURCHASED or INTERTIE ☐ COMBINATION or OTHER

SEND REPORT TO: (Print Full Name, Address and Zip Code)
AGI Technologies Attn: Jeff Coffey
PO Box 1158
Harbor WASHINGTON 18335

[redacted]

REMARKS: 16331

LABORATORY RESULTS (for lab use only)

METHOD USED: MF | MPN | PA | MMO

TOTAL COLIFORM: [illegible] /100 ml E. COLI: [illegible] /100 ml
FECAL COLIFORM: [illegible] /100 ml HETEROTROPHIC: [illegible] /per ml

[redacted]

DRINKING WATER SAMPLE RESULTS

☑ UNSATISFACTORY, Coliforms present
REPEAT SAMPLES REQUIRED: ☐ E. Coli present ☑ E. Coli absent ☐ Fecal present ☐ Fecal absent

☐ SATISFACTORY, Coliforms absent

SEE REVERSE SIDE OF GREEN COPY FOR EXPLANATION OF RESULTS

[redacted] ROUTE | ACCT. #

SOUND ANALYTICAL SERVICES, INC.

4813 PACIFIC HIGHWAY EAST, TACOMA, WASHINGTON 98424 • TELEPHONE 206-922-2310 • FAX 206-922-5047

WATER SAMPLE INFORMATION FOR INORGANIC CHEMICAL ANALYSIS

DO NOT WRITE IN SHADED AREAS. PLEASE FILL BOXES NUMBERED 1 THRU 13, SEE BACK FOR INSTRUCTIONS

LABORATORY NUMBER: 107[illegible]

DATE RECEIVED: [illegible]

1. Date Collected: 5/21/96

2. System Name:

3. System ID: [illegible]

4. Circle Group: (A) B

5. County: K[illegible]

6. Source Type: (circle) Surface (Well) Spring Purchase

7. Sample Taken (circle) (Before Treatment) After Treatment

8. Source No.: [illegible] Source Name: [illegible]

10. Collected By: [illegible]

Telephone: ( ) [illegible]

11. If taken after treatment, circle: Fluoridation Chlorination Filtration Other _____ Water Softener Type _____

12. If taken from distribution, indicate address

Name:

13. Party to pay for testing:

Name: [illegible]

Address: [illegible]

Telephone: ( )

14. Remarks [illegible]

LABORATORY REPORT (Do Not Write Inside This Box)

Tests		MCL	Less Than <	Result	Units	Compliance Yes	Compliance No	Chemist Initials
Antimony	Sb	0.006		ND	mg/L	✓		PK
Arsenic	As	0.05		0.010	mg/L	✓		PK
Barium	Ba	2.0		ND	mg/L	✓		PK
Beryllium	Be	0.004		ND	mg/L	✓		PK
Cadmium	Cd	0.005		ND	mg/L	✓		PK
Chromium	Cr	0.1		ND	mg/L	✓		PK
Copper	Cu	1.3 *		ND	mg/L	✓		PK
Iron	Fe	0.3		ND	mg/L	✓		PK
Lead	Pb	0.015 *		ND	mg/L	✓		PK
Manganese	Mn	0.05		0.08	mg/L		✓	PK
Mercury	Hg	0.002		ND	mg/L	✓		LC
Nickel	Ni	0.1		ND	mg/L	✓		PK
Selenium	Se	0.050		ND	mg/L	✓		PK
Silver	Ag	0.1		ND	mg/L	✓		PK
Sodium	Na	None		5.0	mg/L			PK
Thallium	Tl	0.002		ND	mg/L	✓		PK
Zinc	Zn	5.0		ND	mg/L	✓		PK
Hardness		None		70	mg/L			KD
Conductivity		700		140	umhos	✓		KK
Turbidity		1.0		0.2	NTU	✓		KK
Color		15.0		ND	Units	✓		KK
Chloride	Cl	250		3	mg/L	✓		LK
Cyanide	CN	0.2		ND	mg/L	✓		LE
Fluoride	F	2.0		ND	mg/L	✓		KK
Nitrate	as N	10.0		0.16	mg/L	✓		LK
Nitrite	as N	1.0		ND	mg/L	✓		LK
Sulfate	SO_4	250		8	mg/L	✓		LK
TDS		500		120	mg/L	✓		KK

LABORATORY COMMENTS

* FEDERAL ACTION LEVEL

Laboratory Supervisor: [illegible]

Date of Report: [illegible]

MCL - Maximum Contaminant Level

Reference SOP #SAS-0513

WHITE COPY - STATE GREEN COPY - CUSTOMER BLUE COPY - LABORATORY GOLDENROD COPY - REGIONAL OFFICE

Please Print Plainly

USE HEAVY PENCIL

Health Services Division
PUBLIC HEALTH LABORATORIES
1610 N.E. 150TH ST., SEATTLE, WA 98155-7224

WATER SAMPLE INFORMATION FOR RADIATION CHEMICAL ANALYSES

NUMBER	SYSTEM NAME:	SYSTEM I.D. NO.	SYSTEM CLASS (circle one)	SOURCE NUMBER
0 1 0 5261	SAMMAMISH PLATEAU WATER&SEWER	NEW	1 2 3 4	NEW

Is this follow up of a previous out of compliance sample? Yes ☐ No ☐

If yes, what was the laboratory number of the previous sample?

COUNTY: KING

SOURCE TYPE: ____1. SURFACE ____3. WELL ____2. SPRING ____4. PURCHASE

IF SOURCE IS LAKE OR STREAM, ENTER NAME

IF SAMPLE WAS DRAWN FROM DISTRIBUTION SYSTEM IT WAS COLLECTED FROM SYSTEM AT: (ADDRESS)

DATE OF FINAL REPORT: 06/06/96

DATE COLLECTED	DATE RECEIVED
05/21/96	05/23/96

SEND REPORT TO: (PRINT FULL NAME & ADDRESS)

RON LITTLE
NAME

SAMMAMISH PLATEAU WATER/SEWER
1510 - 228th AVE. S.E.
STREET

ISSAQUAH WA 98029
CITY ZIP CODE

TELEPHONE: (206) 851-5562
AREA CODE

LABORATORY REPORT
(DO NOT WRITE BELOW THIS LINE)

ANALYSES	LESS THAN	RESULTS pCi/L	*MCL pCi/L	COMPLIANCE YES	COMPLIANCE NO	CHEMIST INITIALS
Gross Alpha		ND		✓		
Uranium						
Gross Alpha minus Uranium			15			
Radium-226			3			
Radium-228						
Radium-226 Plus Radium-228			5			
RADON-222		135 ± 25 pCi/L				MS/VBR
Gross Beta		ND	50	✓		
Strontium-89			80			
Strontium-90			8			
Cesium-134			80			
Iodine-131			3			
Tritium			20,000			

LABORATORY SUPERVISOR (Name or Initials): VBR / JCM 6-6-

CHARGE: $50.00 + $70.00 → $120.00
RN ALPHA/BETA TOTAL

REMARKS:

ADDITIONAL COPY TO:

SCOTT COFFEY
AGI TECHNOLOGIES
P.O. BOX 1158
GIG HARBOR, WA 98335

*MCL is the maximum contaminant Level Allowed
pCi/L is picoCuries per liter

DOH 4-0224 (Rev. 3/90) -60-

SOUND ANALYTICAL SERVICES, INC.

ANALYTICAL & ENVIRONMENTAL CHEMISTS

4813 PACIFIC HIGHWAY EAST, TACOMA, WASHINGTON 98424 - TELEPHONE (206)922-2310 - FAX (206)922-5047

Report To: Sammamish Plateau Water & Sewer District

Date: June 6, 1996

Report On: Analysis of Water

Report No.: 56831

IDENTIFICATION:
Sample received on 05-22-96
P.O. No. 478

ANALYSIS:

Lab Sample No. 56831-1

Client ID: Well 2.2

ICP Metals Per EPA Method 6010
Date Analyzed: 5-23-96
Units: mg/L

Parameter	Result	PQL
Calcium	15	0.50
Potassium	3.4	0.50
Magnesium	4.8	0.10

General Chemistry
Units: mg/L

Parameter	Method	Result	PQL
Bicarbonate (as $CaCO_3$)	SM 2320B	65	5

PQL - Practical Quantitation Limit

GROUND WATER CONTAMINATION
Susceptibility Assessment Survey Form

SAMMAMISH PLATEAU WATER & SEWER DISTRICT
1510 228th Avenue S.E.
Issaquah, Washington 98027

WELL NO. 4

GROUND WATER CONTAMINATION
Susceptibility Assessment Survey Form

TABLE OF CONTENTS

- Susceptibility Assessment Survey Form
- Sammamish Plateau Well 4 WHPA Capture Zones
- Well Log
- Elevation Illustration
- Water Facilities Inventory Form
- Inorganic Chemical Analysis 1989 - 1993

Ground Water Contamination Susceptibility Assessment Survey Form

Version 2.1

IMPORTANT! Please complete one form for each ground water source (well, wellfield, spring) used in your water system. Photocopy as necessary.

PART I: System Information

Well owner/manager : SAMMAMISH PLATEAU WATER + SEWER DIST.

Water system name : SAMMAMISH PLATEAU WATER + SEWER DIST

County: KING

Water system number: 409009 Source number: 504

Well depth: 714 (ft.) (*From WFI form*)

Source name: WELL #4

WA well identification tag number: ___ ___ ___-___ ___ ___

_____ well not tagged

Number of connections: 9000 Population served: 26,000

Township: 25 N Range: 06E

Section: 34 1/4 1/4 Section: SW/NW

Latitude/longitude (if available): _____/_____

How was lat./long. determined?

_____ global positioning device _____ survey _____ topographic map

____other: _____

* Please refer to Assistance Packet for details and explanations of all questions in Parts II through V.

PART II: Well Construction and Source Information

1) Date well originally constructed: 3/23/70 month/day/year

last reconstruction: ___/___/___ month/day/year

_____ information unavailable

2) Well driller: RICHARDSON WELL DRILLING
P.O. BOX 2266
TACOMA, WA. 98444

__ well driller unknown

3) Type of well:

X Drilled: __ rotary __ bored X cable (percussion) __ Dug

__ Other: __ spring(s) __ lateral collector (Ranney)

__ driven __ jetted __ other: _____

Additional comments: _____

4) Well report available? X YES (attach copy to form) __ NO

If no well log is available, please attach any other records documenting well construction; e.g. boring logs, "as built" sheets, engineering reports, well reconstruction logs.

5) Average pumping rate: 625 gpM (gallons/min)

Source of information: WATER FACILITIES INVENTORY

If not documented, how was pumping rate determined? _____

__ Pumping rate unknown

6) Is this source treated?

If so, what type of treatment:

__ disinfection __ filtration __ carbon filter __ air stripper X other

Purpose of treatment (describe materials to be removed or controlled by treatment):

CHLORINATION FOR ODOR CONTROL.

7) If source is chlorinated, is a chlorine residual maintained: __ YES X NO

Residual level: _____ (*At the point closest to the source.*)

PART III: Hydrogeologic Information

1) Depth to top of open interval: [check one]

___ < 20 ft ___ 20–50 ft ___ 50–100 ft ___ 100–200 ft X >200 ft

___ information unavailable ('< ' *means less than;* '> ' *means greater than*)

2) Depth to ground water (static water level):

___ < 20 ft ___ 20–50 ft ___ 50–100 ft X >100 ft

___ flowing well/spring (artesian)

How was water level determined?

X well log ___ other: _____

___ depth to ground water unknown

3) If source is a flowing well or spring, what is the confining pressure: N/A

_____ psi (pounds per square inch)
or
_____ feet above wellhead

4) If source is a flowing well or spring, is there a surface impoundment, reservoir, or catchment associated with this source: ___ YES ___ NO NA

5) Wellhead elevation (height above mean sea level): 360± (ft)

How was elevation determined? ___ topographic map ___ Drilling/Well Log ___ altimeter

___ other: HYDRAULIC PROFILE MAP

___ information unavailable

6) Confining layers: (This can be completed only for those sources with a drilling log, well log or geologic report describing subsurface conditions. Please refer to assistance package for example.)

X evidence of a confining layer in well log

___ no evidence of a confining layer in well log

If there is evidence of a confining layer, is the depth to ground water more than 20 feet above the ~~top~~ bottom of ~~the open interval~~ OF THE LOWEST CONFINING LAYER? X YES ___ NO

___ information unavailable

7) Sanitary setback:

___ < 100 ft* X 100–120 ft ___ 120–200 ft ___ > 200 ft
* if less than 100 ft describe the site conditions:

8) Wellhead construction:

✓ wellhead enclosed in a wellhouse

✓ controlled access (describe): Locked entrance/exit in wellhouse

___ other uses for wellhouse (describe): ___

___ no wellhead control

9) Surface seal:

___ 18 ft

___ < 18 ft (no Department of Ecology approval) (*'<' means less than*)

___ < 18 ft (Approved by Ecology, include documentation) (*'<' means less than*)

X > 18 ft (*'>' means greater than*)

___ depth of seal unknown

___ no surface seal

10) Annual rainfall (inches per year):

___ < 10 in/yr ___ 10–25 in/yr X > 25 in/yr

PART IV: Mapping Your Ground Water Resource

1) Annual volume of water pumped: 105,062,000 (gallons)

How was this determined?

X meter

___ estimated: ___ pumping rate (_____)

___ pump capacity (_____)

___ other: _____

2) "Calculated Fixed Radius" estimate of ground water movement:
(see Instruction Packet)

6 month ground water travel time : 620 (ft)

1 year ground water travel time : 880 (ft)

5 year ground water travel time: 1970 (ft)

10 year ground water travel time: 2780 (ft)

Information available on length of screened/open interval?

X YES ___ NO

Length of screened/open interval: 20 (ft)

3) Is there a river, lake, pond, stream, or other obvious surface water body within the 6 month time of travel boundary? X YES ___ NO (mark and identify on map).

4) Is there a stormwater and/or wastewater facility, treatment lagoon, or holding pond located within the 6 month time of travel boundary? ___ YES X NO (mark and identify on map).

Comments: _____

PART V: Assessment of Water Quality

1) Regional sources of risk to ground water:

Please indicate if any of the following are present within a circular area around your water source having a radius up to and including the five year ground water travel time:

	6 month	1 year	5 year	unknown
likely pesticide application	✓	✓	✓	
stormwater injection wells	No	No	No	
other injection wells	No	No	No	
abandoned ground water well				✓
landfills, dumps, disposal areas	No	No	No	
known hazardous materials clean-up site	No	No	No	
water system(s) with known quality problems				✓
population density > 1 house/acre	YES	YES	YES	
residences commonly have septic tanks	✓	✓	✓	
Wastewater treatment lagoons	No	No	No	
sites used for land application of waste	No	No	No	

Mark and identify on map any of the risks listed above which are located within the 6 month time of travel boundary? (*Please include a map of the wellhead and time of travel areas with this form. Please locate and mark any of the following.*)

If other recorded or potential sources of ground water contamination exist within the ten year time of travel circular zone around your water supply, please describe:

2) Source specific water quality records:

Please indicate the occurrence of any test results since 1986 that meet the following conditions: (Unless listed on assessment. MCLs are listed in assistance package.)

A. Nitrate: (Nitrate MCL = 10 mg/l)	YES	NO
Results greater than MCL		X
< 2 mg/liter nitrate	X	
2-5 mg/liter nitrate		X
> 5 mg/liter nitrate		X
___ Nitrate sampling records unavailable		

B. VOCs: (VOC detection level 0.5 ug/l or 0.0005 mg/l.)	YES	NO
Results greater than MCL or SAL		X
VOCs detected at least once		X
VOCs never detected	X	
___ VOC sampling records unavailable		

C. EDB/DBCP:	YES	NO
(EDB MCL = 0.05 ug/l or 0.00005 mg/l. DBCP MCL = 0.2 ug/l or 0.0002 mg/l.)		
EDB/DBCP detected below MCL at least once		
EDB/DBCP detected above MCL at least once		
EDB/DBCP never detected		

___ EDB/DBCP tests required but not yet completed

X EDB/DBCP tests not required

D. Other SOCs (Pesticides):	YES	NO
Other SOCs detected		
(pesticides and other synthetic organic chemicals)		

___ Other SOC tests performed but none detected

(list test methods in comments

X Other SOC tests not performed

If any SOCs in addition to EDB/DBCP were detected, please identify and date. If other SOC tests were performed, but no SOCs detected, list test methods here: _____

_____

_____

_____

E. Bacterial contamination:

	YES	NO
Any bacterial detection(s) in the past 3 years in samples taken from the source (not distribution sampling records).		X
Has source (in past 3 years) had a bacteriological contamination problem found in distribution samples that was attributed to the source.		X

___ Source sampling records for bacteria unavailable

Part VI: Geographic or Hydrologic Factors Contributing to a Non-Circular Zone of Contribution

The following questions will help identify those ground water systems which may not be accurately represented by the calculated fixed radius (CFR) method described in Part IV. For these sources, the CFR areas should be used as a preliminary delineation of the critical time-of travel zones for that source. As a system develops its Wellhead Protection Plan for theses sources, a more detailed delineation method should be considered.

1) Is there evidence of obvious hydrologic boundaries within the 10 year time of travel zone of the CFR? (Does the largest circle extend over a stream, river, lake, up a steep hillside, and/or over a mountain or ridge?)

X YES ___ NO

Describe with references to map produced in Part IV:

2 PERENNIAL STREAMS Flowing into and out of a large wetland in the north third of the capture zones. Steep hill going up to the south.

2) Aquifer Material:

A) Does the drilling log, well log or other geologic/engineering reports identify that the well is located in an area where the underground conditions are identified as fractured rock and/or basalt terrain?

___ YES X NO

B) Does the drilling log, well log or other geologic/engineering reports indicate that the well is located in an area where the underground conditions are primarily identified as coarse sand and gravel?

X YES ___ NO

3) Is the source located in an aquifer with a high horizontal flow rate? (These can include sources located on flood plains of large rivers, artesian wells with high water pressure, and/or shallow flowing wells and springs.)

__ YES X NO

4) Are there other high capacity wells (agricultural, municipal and/or industrial) located within the CFRs? YES

a) Presence of ground water extraction wells removing more than approximately 500 gal/min within...

	YES	NO	unknown
< 6 month travel time	/		
6 month–1 year travel time	/		
1–5 year travel time	/		
5–10 year travel time	/		

b) Presence of ground water recharge wells (dry wells) or heavy irrigation within...

	YES	NO	unknown
< 1 year travel time		/	
1–5 year travel time		/	
5–10 year travel time		/	

Please identify or describe additional hydrologic or geographic conditions that you believe may affect the shape of the zone of contribution for this source. Where possible, reference them to locations on the map produced in Part IV.

Suggestions and Comments

Did you attend one of the susceptibility workshops? X YES ___ NO

Did you find it useful? X YES ___ NO

Did you seek outside assistance to complete the assessment? X YES ___ NO

- -

This form and instruction packet are still in the process of development. Your comments, suggestions and questions will help us upgrade and improve this assessment form. If you found particular sections confusing or problematic please let us know. How could this susceptibility assessment be improved or made clearer? Did the instruction package help you find the information needed to complete the assessment? How much time did it take you to complete the form? Were you able to complete the assessment without additional/outside expertise? Do you feel the assessment was valuable as a learning experience? Any other comments or constructive criticisms you have would be appreciated.

____

____

____

____

____

____

____

____

____

Sammamish Plateau Water & Sewer District
Well 4

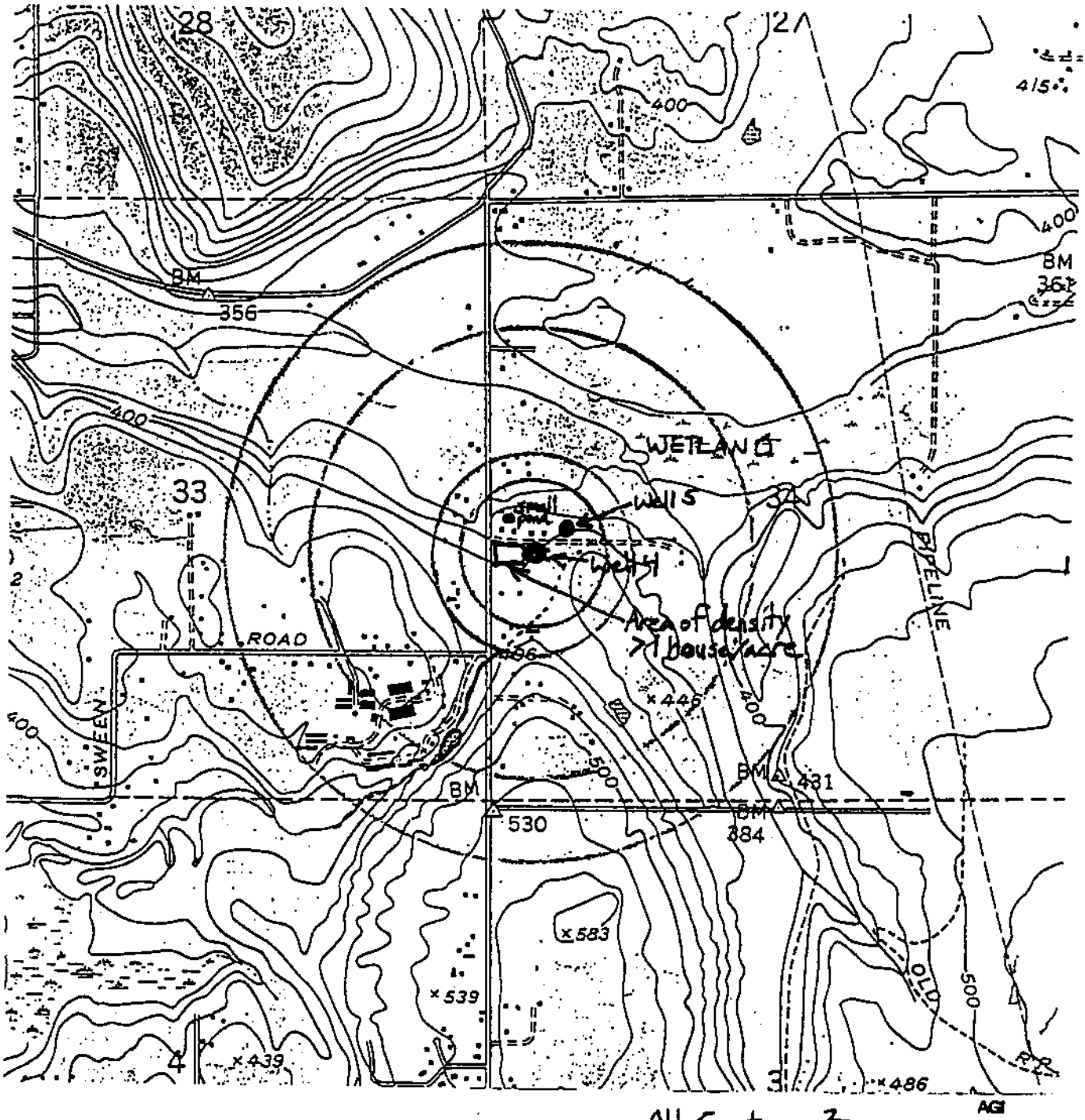

LEGEND

All Capture Zone areas served by residential septic tanks.

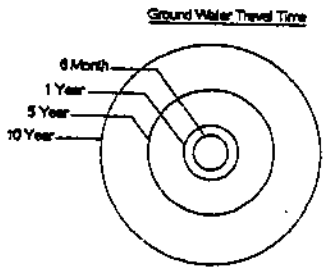

SCALE (FT)

0 1000 2000 3000 4000 5000

...e Original and First Copy with ... Division of Water Management ...ond Copy—Owner's Copy ...rd Copy—Driller's Copy

WATER WELL REPORT

STATE OF WASHINGTON

Application No. 10373

Permit No. [illegible]

(1) OWNER: Name King County Water District # 82 Address [illegible]

(2) LOCATION OF WELL: County King [illegible]

Bearing and distance from section or subdivision corner 85 feet east & 70 feet [illegible] quarter corner of [illegible]

(3) PROPOSED USE: Domestic [ ] Industrial [ ] Municipal [ ] Irrigation [ ] Test Well [ ] Other [ ]

(4) TYPE OF WORK: Owner's number of well [illegible] (if more than one) [illegible]

New well [illegible] Method [illegible] Boring [illegible] Cable [illegible] Driven [illegible]

(5) DIMENSIONS: [illegible]

(6) CONSTRUCTION DETAILS: [illegible]

Casing installed: [illegible]

Perforations [illegible]

Screens [illegible]

Gravel [illegible]

Surface seal [illegible]

(7) PUMP: [illegible]

(8) WATER LEVELS: [illegible]

(9) WELL TESTS: [illegible]

(10) WELL LOG: [illegible]

Formation: Describe by color, character, size of material and structure and show thickness of aquifers and the kind and nature of the material in each stratum penetrated, with at least one entry for each change of formation.

MATERIAL	FROM	TO
[illegible]		

WELL DRILLER'S STATEMENT

This well was drilled under my [illegible] true to the best of my knowledge and belief.

NAME [illegible]

Address [illegible]

(Signed) [illegible]

USE ADDITIONAL SHEETS IF NECESSARY

Appl. 10373
Per. 9719

STATE OF WASHINGTON
DEPARTMENT OF CONSERVATION
DIVISION OF WATER RESOURCES

WELL LOG

Record by Driller

Source Driller's record

Location: State of WASHINGTON

County King

Area

Map

NW ¼ SW ¼ sec 34 T 25 N., R 6 E. WM

Diagram of Section

Drilling Co. Richardson Well Drilling Co., Inc.

Address P.O.Box 2266, Tacoma, WA 98444

Method of Drilling cable Date March 13 19 70

Owner King County Water District #82

Address Issaquah, WA

Land surface, datum ft above/below

SWL: 175 Date March 16, 19 70 Dims.: 12" x 717

Correlation	Material	From (feet)	To (feet)
	Municipal supply		
	top soil	0	3
	hardpan & boulders	m 3	43
	sand cemented & gravel	43	72
	clay, yellow, gravel & sand	72	79
	hardpan, brown	79	110
	clay & sand, yellow	110	118
	hardpan, brown	118	155
	clay, bn, gravel & sand	155	169
	gravel, sand & clay grey	169	190
	clay (bn) fine sand & gravel	190	199
	gravel, course sand & some water	199	202
	gravel, sand & clay grey	202	221
	clay, grey & fine sand	221	249
	sand-course & fine & clay grey	249	264
	rock, gravel & clay grey	264	271

(Transcribe driller's terminology literally but paraphrase as necessary, in parentheses. If material water-bearing, so state and record static level if reported. Give depths in feet below land-surface datum unless otherwise indicated. Correlate with stratigraphic column, if feasible. Following log of materials, list all casings, perforations, screens, etc.)

Turn up

Sheet ____ of ____ sheets

ELL LOG.—Continued No...../.....-.....

Diss-ation	Material	From (feet)	To (feet)
	Depth forward	———	
	sand, cemented & gravel	271	280
	rock, gravel & grey clay	280	330
	clay, sand & gravel	330	351
	clay, grey sand & gravel	351	370
	sand, cemented & gravel	370	380
	glay gray & gravel XXX	380	397
	sand cemented & gravel	397	411
	clay grey, some sand & gravel	411	433
	clay, grey & fine sand	433	542
	clay, dry grey	542	570
	sand, fine & clay grey	570	574
	clay grey	574	595
	sand f & c & gray clay	595	649
	clay, sand grey	649	651
	sand, clay grey & some clay	651	686
	gravel, clay grey & sand	686	689'
	sand, cemented & gravel clay	689	696
	sand & gravel, water formation	696	7171
	Casing: 12" from 0' to 680'		
	Screens: UOP Johnson, stainless Steel		
	10 SS 100 from 697' to 717'		
	Surface Seel: cement 20'		
	Pump test: 750 gpm with ? DD afger 24 hrs.		
	800 broken suction could not get		

F. No. 7449—OS—12-65.

1

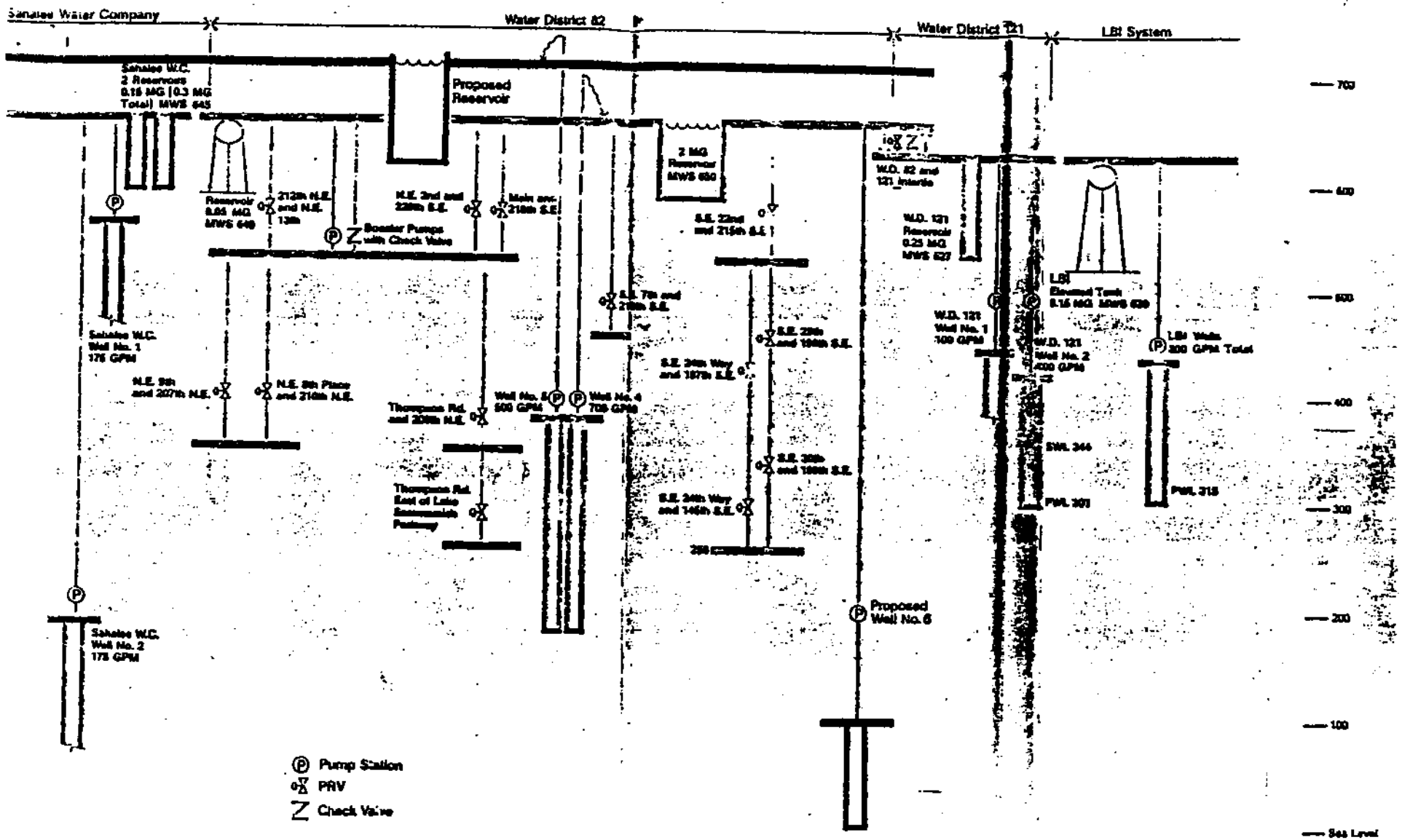

Sahalee Water Company
Water District 82
Water District 121
LBI System
Sahalee W.C.
2 Reservoirs
0.15 MG (0.3 MG
Total) MWS 645
Proposed
Reservoir
2 MG
Reservoir
MWS 650
W.D. 82 and
121 Intertie
Reservoir
0.05 MG
MWS 649
212th N.E.
and N.E.
13th
Booster Pumps
with Check Valve
N.E. 2nd and
228th S.E.
Main and
218th S.E.
S.E. 22nd
and 215th S.E.
W.D. 121
Reservoir
0.25 MG
MWS 627
LBI
Elevated Tank
0.15 MG MWS 630
S.E. 7th and
218th S.E.
W.D. 121
Well No. 1
100 GPM
W.D. 121
Well No. 2
400 GPM
LBI Wells
300 GPM Total
Sahalee W.C.
Well No. 1
175 GPM
S.E. 29th
and 198th S.E.
S.E. 24th Way
and 187th S.E.
N.E. 9th
and 207th N.E.
N.E. 8th Place
and 210th N.E.
Thompson Rd.
and 208th N.E.
Well No. 5
500 GPM
Well No. 4
700 GPM
SWL 344
S.E. 30th
and 199th S.E.
Thompson Rd.
East of Lake
Sammamish
Parkway
S.E. 24th Way
and 146th S.E.
PWL 301
PWL 315
Proposed
Well No. 6
Sahalee W.C.
Well No. 2
175 GPM
Pump Station
PRV
Check Valve
700
600
500
400
300
200
100
Sea Level

Health
Environmental Health

WATER FACILITIES INVENTORY (WFI)

Read Instructions on back before completing

FILE
DATE RECEIVED 01/12/94
UPDATED
FEB 1 1994
Ans'd.....
DATE UPDATED: 01/11/94

1. SYSTEM ID NO.	2. COUNTY	GROUP	TYPE	WRIA
69009	KING	A	COMM	9

3. SYSTEM NAME: SAMMAMISH PLATEAU WATER & SEWER

STREET ADDRESS: 1510 228TH AVE SE.

P.O. BOX (IF APPLICABLE):

CITY: ISSAQUAH STATE: WA ZIP CODE: 98027

4. OWNER'S NAME (LAST, FIRST): SAMMAMISH PLATEAU WATER & OWNER NO. 3007

STREET ADDRESS: 1510 228TH AVE. S.E.

P.O. BOX (IF APPLICABLE):

CITY: ISSAQUAH STATE: WA ZIP CODE: 98027

5. SYSTEM CONTACT PERSON: RONALD E. LITTLE TITLE: MANAGER

DAY TELEPHONE: 206-392-6256 EVENING TELEPHONE:

WFI COMPLETED BY: TITLE:

DAY TELEPHONE: DATE:

8. SUBMITTED FOR: [ ] NEW SYSTEM [ ] NO CHANGE [ ] REACTIVATE [ ] SYSTEM NAME CHANGE* [ ] UPDATE [ ] DELETE

*OLD SYSTEM NAME - ENTER ONLY IF CHANGING WITH THIS WFI

SYSTEMS SERVING ANY RESIDENTS (PEOPLE LIVING IN A DWELLING SERVED BY THE SYSTEM), COMPLETE THIS SECTION

9. NUMBER ACTIVE RESIDENTIAL CONNECTIONS: 8844

10. NUMBER ACTIVE RESIDENTIAL POPULATION: 25,647

SYSTEMS SERVING ANY NON-RESIDENTS (I.E., TRAVELERS, EMPLOYEES, STUDENTS, ETC.), COMPLETE THIS SECTION

11. NUMBER NON-RESIDENTIAL CONNECTIONS:

12. ENTER AVERAGE DAILY NON-RESIDENTIAL POPULATION SERVED FOR EACH MONTH. MAKE ENTRY FOR EACH MONTH

JAN		JULY	
	MAY		NOV.
MAR		SEP	

13. DOES THE SYSTEM SERVE AT LEAST 25 OF THE SAME NON-RESIDENTS FOR 4 OR MORE DAYS PER WEEK FOR AT LEAST 180 DAYS PER YEAR? [ ] YES [X] NO

14. TOTAL NUMBER CONNECTIONS METERED: 8,844

15. DISTRIBUTION RESERVOIR(S) TOTAL CAPACITY: 12,850,000 GALLONS

6. OWNERSHIP (CHECK ONE ONLY)
- [ ] PRIVATE: NON-PROFIT
- [ ] PRIVATE: FOR-PROFIT
- [X] LOCAL GOVERNMENT (COUNTY/CITY/PUD/WATER DISTRICT)
- [ ] STATE
- [ ] FEDERAL

7. PREDOMINANT CHARACTERISTIC (CHECK ONE ONLY)
- [X] RESIDENTIAL
- [ ] RECREATIONAL
- [ ] BUSINESS/INDUSTRIAL/AGRICULTURAL/COMMERCIAL
- [ ] LODGING/FOOD SERVICE
- [ ] SCHOOL/DAY CARE
- [ ] OTHER (CHURCHES, ETC.)

16. DOH SOURCE NUMBER	17. SOURCE NAME (LIST UTILITY'S NAME FOR SOURCE. IF SOURCE IS PURCHASED OR INTERTIED, LIST SELLER'S ID# AND NAME USING FOLLOWING FORMAT: XXXXXX/NAME EXAMPLE: 770501/SEATTLE)	18. SOURCE CATEGORY: WELL	WELL FIELD	SURFACE	SPRING	RANNEY/INF. GAL.	INTERTIE	PURCHASE-TREATED	PURCHASE-UNTREATED	19. USE: PERMANENT	SEASONAL	EMERGENCY	20. SOURCE METERED	21. TREATMENT: NONE	CHLORINATION	FILTRATION	FLUORIDATION	OTHER	22. WELL DEPTH (FEET)	23. SOURCE CAPACITY (GPM)	24. SOURCE LOCATION: 1/4, 1/4 SEC.	SEC. NO.	TWP	RNG.	SWTR EVALUATION VOC EVALUATION
301	WELL 1	X								X				X					154	500	SW/NE	10	24N	06E	
302	WELL 2	X									X			X					132	360	NW/SE	11	24N	06E	
303	WELL # 5	X								X					X				716	450	NW/SW	34	25N	06E	
304	WELL # 4	X								X					X				714	625	SW/NW	34	25N	06E	
305	WELL 6	X									X				X				365	600	NE/SE	32	25N	06E	
306	WELL #7	X									X			X					150	2,000	SE/SE	21	24N	06E	
307	WELL #8	X								X				X					150	3,500	SE/SE	21	24N	06E	

MINIMUM REQUIRED BACTERIOLOGICAL SAMPLING SCHEDULE

25.	26.	JAN	FEB	MAR	APR	MAY	JUN	JUL	AUG	SEP	OCT	NOV	DEC
		30	30	30	30	30	30	30	30	30	30	30	30

NO. APPROVED SERVICES (PER PLANS): 0 DATE OF LAST SANITARY SURVEY: 0000 BY DOH [ ] LHD [ ]

SYSTEM IN CRITICAL WATER SUPPLY SERVICE AREA? [X] YES [ ] NO GW MGMT AREA? [ ] YES [ ] NO FOR LHD USE ONLY

EFFECTIVE DATE RETRO. CHANGES: SIGNATURE OF DOH REVIEWER: DATE:

WATER SYSTEM

1989

SAMMAMISH PLATEAU WATER & SEWER DISTRICT

WATER SAMPLE INFORMATION FOR INORGANIC CHEMICAL ANALYSES - 1989

ITEM	WELL 1 8/4/89	WELL 2 4/10/89	WELL 4 4/10/89	WELL 5 4/10/89	WELL 6 7/17/89	WELL 7 7/17/89	WELL 8 4/10/89	*MCL
pH	7.06	7.23	8.22	8.32	7.46	7.48	*7.05	----
Arsenic	*0.010	*0.010	*0.010	*0.010	*0.010	*0.010	*0.010	0.05
Barium	*0.25	*0.25	*0.25	*0.25	*0.25	*0.25	*0.25	1.0
Cadmium	*0.002	*0.002	*0.002	*0.002	*0.002	*0.002	*0.002	0.01
Chromium	*0.010	*0.010	*0.010	*0.010	*0.010	*0.010	*0.010	0.005
Iron	*0.05	*0.05	*0.05	*0.05	*0.05	0.05	*0.05	0.3
Lead	*0.010	*0.010	*0.010	*0.010	*0.010	*0.010	*0.010	0.05
Manganese	*0.010	*0.010	0.041	0.042	0.026	*0.010	*0.010	0.05
Mercury	*0.0010	*0.0010	*0.0010	*0.0010	*0.0010	*0.0010	*0.0010	0.002
Selenium	*0.005	*0.005	*0.005	*0.005	*0.005	*0.005	*0.005	0.01
Silver	*0.010	*0.010	*0.010	*0.010	*0.010	*0.010	0.010	0.05
Sodium	*10	*10	*10	*10	*10	*10	*10	
Hardness	60	87	63	61	48	74	81	
Conductivity	155	220	160	150	120	200	200	700
Turbidity	*0.1	*0.4	*0.2	*0.1	*0.1	0.2	*0.1	1.0
Color	*5.0	*5.0	*5.0	*5.0	*5.0	15.0	*5.0	15.0
Fluoride	*0.2	*0.2	*0.2	*0.2	*0.2	*0.2	*0.2	2.0
Nitrate	1.1	*0.7	*0.2	*0.2	*0.2	1.6	*0.2	10.0
Chloride	*10	*10	*10	*10	*10	*10	*10	250
Sulfate								250

PARTS PER MILLION

*MCL Is the Maximum Contaminant Level Allowed

*Less Than

(Note: Well 7 was re-tested for Iron & Turbidity and those numbers are listed above.)

SAMMAMISH PLATEAU WATER AND SEWER DISTRICT
WATER SAMPLE INFORMATION FOR INORGANIC CHEMICAL ANALYSIS - 1990

ITEM	WELL 1 9/7/90	WELL 2 4/10/89	WELL 4 9/7/90	WELL 5 9/7/90	WELL 6 9/7/90	WELL 7 9/7/90	WELL 8 9/7/90	** MCL
pH	6.74	7.23	7.26	7.74	7.88	7.29	7.12	
Arsenic	<0.010	<0.010	<0.010	<0.010	<0.010	<0.010	<0.010	0.05
Barium	<0.25	<0.25	<0.25	<0.25	<0.25	<0.25	<0.25	1.00
Cadmium	<0.002	<0.002	<0.002	<0.002	<0.002	<0.002	<0.002	0.01
Chromium	<0.010	<0.010	<0.010	<0.010	<0.010	<0.010	<0.010	0.05
Iron	<0.05	<0.05	<0.05	<0.05	<0.05	<0.05	<0.05	0.3
Lead	<0.005	<0.0100	<0.005	<0.005	<0.005	<0.005	<0.005	0.05
Manganese	<0.010	<0.0100	<0.039	<0.037	<0.028	<0.010	<0.010	0.05
Mercury	<0.0010	<0.0010	<0.0010	<0.0010	<0.0010	<0.0010	<0.0010	0.002
Selenium	<0.05	<0.005	<0.005	<0.005	<0.005	<0.005	<0.005	0.01
Silver	<0.010	<0.0100	<0.010	<0.010	<0.010	<0.010	<0.010	0.05
Sodium	<10	<10	<10	<10	<10	<10	<11	
Hardness	79	87	58	58	51	72	72	
Conductivity	85	220	150	154	125	189	188	700
Turbidity	<0.2	<0.4000	<0.1	<0.1	<0.2	<0.1	<0.9	1.0
Color	<5.0	<5.0	<10.0	<10.0	<5.0	<5.0	<10.	15
Fluoride	<0.2	<0.2000	<0.2	<0.2	<0.2	<0.2	<0.2	2.0
Nitrate	<1.3	<0.7000	<0.2	<0.2	<0.2	<0.2	<1.3	10.0
Chloride	<10	<10	<10	<10	<10	<10	<10	250

PARTS PER MILLION

< Less than Detectable Limits

** Maximum Contaminant Level

SAMMAMISH PLATEAU WATER AND SEWER DISTRICT
WATER SAMPLE INFORMATION FOR INORGANIC CHEMICAL ANALYSIS - 1991

ITEM	WELL 1 7/12/91	WELL 2 7/12/91	WELL 4 7/12/91	WELL 5 7/12/91	WELL 6 7/12/91	WELL 7 7/12/91	WELL 8 7/12/91	** MCL
pH	6.6	6.4	7.3	6.7	6.7	7.1	6.8	
Arsenic	<0.010	<0.010	<0.010	<0.010	<0.010	<0.010	<0.010	0.05
Barium	<0.25	<0.25	<0.25	<0.25	<0.25	<0.25	<0.25	1.00
Cadmium	<0.002	<0.002	<0.002	<0.002	<0.002	<0.002	<0.002	0.01
Chromium	<0.010	<0.010	<0.010	<0.010	<0.010	<0.010	<0.010	0.05
Iron	<0.05	<0.05	<0.05	<0.05	<0.05	<0.05	<0.05	0.3
Lead	<0.005	<0.005	<0.005	<0.005	<0.005	<0.005	<0.005	0.05
Manganese	<0.010	<0.010	<0.018	<0.026	<0.023	<0.010	<0.010	0.05
Mercury	<0.0010	<0.010	<0.0010	<0.0010	<0.0010	<0.0010	<0.0010	0.002
Selenium	<0.005	<0.005	<0.005	<0.005	<0.005	<0.005	<0.005	0.01
Silver	<0.010	<0.010	<0.010	<0.010	<0.010	<0.010	<0.010	0.05
Sodium	7.	6.	9.	8	5	10	12	
Hardness	61	66	52	51	43	61	75	
Conductivity	180	270	120	130	120	190	210	700
Turbidity	0.2	0.6	.4	<0.3	.3	.4	0.3	1.0
Color	<5.0	<5.0	<5.0	<5.0	<5.0	<5.0	<5.	15
Fluoride	<0.2	<0.2	<0.2	<0.2	<0.2	<0.2	<0.2	
Nitrate	1.2	<1.9	1.8	<0.2	<0.2	<0.2	1.3	
Chloride	<10	<10	<10	<10	21	24	<10	

SAMMAMISH PLATEAU WATER AND SEWER DISTRICT
WATER SAMPLE INFORMATION FOR INORGANIC CHEMICAL ANALYSIS - 1992

ITEM	WELL 1 2/14/92	WELL 2 2/14/92	WELL 4 2/14/92	WELL 5 2/14/92	WELL 6 2/14/92	WELL 7 2/14/92	WELL 8 7/12/91	** MCL
pH	7.0	7.3	7.93	8.4	8.4	7.7	6.8	
Arsenic	<0.010	<0.01	<0.01	<0.01	<0.01	<0.01	<0.010	.05
Barium	<0.1	<0.1	<0.1	<0.1	<0.1	<0.1	<0.25	1.00
Cadmium	<0.002	<0.002	<0.002	<0.002	<0.002	<0.002	<0.002	0.01
Chromium	<0.05	<0.05	<0.05	<0.05	<0.05	<0.05	<0.010	0.05
Iron	<0.05	<0.05	<0.05	<0.05	0.37	<0.05	<0.05	0.3
Lead	<0.002	<0.002	<0.0025	<0.002	<0.002	<0.002	<0.005	0.05
Manganese	<0.01	<0.01	0.043	<0.041	0.038	<0.01	<0.010	0.05
Mercury	<0.0002	<0.0002	<0.0002	<0.0002	<0.0002	<0.0002	<0.0010	0.002
Selenium	<0.005	<0.005	<0.005	<0.005	<0.005	<0.005	<0.005	0.01
Silver	<0.01	<0.01	<0.01	<0.01	<0.01	<0.01	<0.010	0.05
Sodium	9.5	6.1	8.7	8.4	4.8	10	12	
Hardness	85.	75	62	62	56	79	75	
Conductivity	180.	150	140	140	120	170	210	700
Turbidity	0.46	0.42	.33	0.32	.90	.32	0.3	1.0
Color	<5.0	<5.0	<5.0	<5.0	<5.0	<5.0	<5.	15
Fluoride	<0.5	<0.5	<0.5	<0.5	<0.5	<0.5	<0.2	2
Nitrate	1.0	<1.8	<1.0	<1.0	<1.0	<1.0	1.3	10
Chloride	<20.	<20	<20	<20	<20	<20	<10	250
Sulfate	10.	<10.	<10.	<10	<10	11		250
Copper	<0.02	<0.02	<0.02	<0.02	<0.02	<0.02		1.0
Zinc	<0.05	<0.05	<0.05	<0.05	<0.05	<0.05		5.0
Aluminum	<5.0	<5.0	<5.0	<5.0	<5.0	<5.0		
Calcium	19.	18.	18	18	16	20.		

SAMMAMISH PLATEAU WATER AND SEWER DISTRICT
WATER SAMPLE INFORMATION FOR INORGANIC CHEMICAL ANALYSIS - 1993

ITEM	WELL 1	WELL 2	WELL 4	WELL 5	WELL 6	WELL 7	WELL 8	WELL 9	** MCL
	3-2-93	3-2-93	3-2-93	3-2-93	3-2-93	3-2-93	3-2-93	3-2-93	
Arsenic	< 0.01	< 0.01	< 0.01	< 0.01	< 0.01	< 0.01	< 0.01	< 0.01	0.05
Barium	< 0.1	< 0.1	< 0.1	< 0.1	< 0.1	< 0.1	< 0.1	< 0.1	1
Cadmium	< 0.002	< 0.002	< 0.002	< 0.002	< 0.002	< 0.002	< 0.002	< 0.002	0.01
Chromium	< 0.05	< 0.05	< 0.05	< 0.05	< 0.05	< 0.05	< 0.05	< 0.05	0.05
Copper	< 0.02	< 0.02	< 0.02	< 0.02	< 0.02	< 0.02	< 0.02	< 0.02	1.3
Iron	< 0.05	< 0.05	< 0.05	< 0.05	< 0.05	< 0.05	< 0.05	< 0.17	0.3
Lead	< 0.002	< 0.002	< 0.002	< 0.002	< 0.002	< 0.002	< 0.002	< 0.002	0.05
Manganese	< 0.01	< 0.01	< 0.043	< 0.041	< 0.092	< 0.01	< 0.01	< 0.01	0.05
Mercury	< 0.0002	< 0.0002	< 0.0002	< 0.0002	< 0.0002	< 0.0002	< 0.0002	< 0.0002	0.002
Selenium	< 0.005	< 0.005	< 0.005	< 0.005	< 0.005	< 0.005	< 0.005	< 0.005	0.01
Silver	< 0.01	< 0.01	< 0.01	< 0.01	< 0.01	< 0.01	< 0.01	< 0.01	0.05
Sodium	9.1	9.3	9.0	7.7	8.4	9.5	10.	8.5	
Zinc	< 0.05	< 0.05	< 0.05	< 0.05	< 0.05	< 0.05	< 0.05	< 0.05	5
Hardness	78.	80	65	65	93	79	75	68	
Conductivity	190	150	160	150	210	190	190	160	700
Turbidity	0.10	0.49	0.17	0.15	0.1	0.1	0.14	0.43	1
Color	5.	5.	5.	5.	5.	5.	5.	5.	15
Chloride	< 20	< 20	< 20	< 20	< 20	< 20	< 20	< 20	250
Fluoride	< 0.5	< 0.5	< 0.5	< 0.5	< 0.5	< 0.5	< 0.5	< 0.5	2
Nitrate	< 1.0	< 1.0	< 1.0	< 1.0	< 1.0	< 1.0	< 1.1	< 1.0	10
Sulfate	< 10	< 10	< 10	< 13	< 10	< 10	< 10	< 10	250

LEGEND

< Less Than Detectable Limits

** Maximum Contaminant Level

Ground Water Contamination
Susceptibility Assessment Survey Form
Version 2.2

IMPORTANT! Please complete one form for each ground water source (well, wellfield, spring) used in your water system.
Photocopy as necessary.

PART I: System Information

Well owner/manager : Sammamish Plateau Water & Sewer District

Water system name : Sammamish Plateau Water & Sewer District

County: King

Water system number: 409009 Source number: New Replacement Well (Replaces Original Well 4 source number SO4

Well depth: 855 (ft.) (*From WFI form*)

Source name: Well 4R

WA well identification tag number: AAS–270
_____ well not tagged

Number of connections: 14358 Population served: 48,036

Township: 25N Range: 06E

Section: 34 1/4 1/4 Section: NW1/4 of the SW1/4

Latitude/longitude (if available): 47.609 / -122.03
How was lat./long. determined?

_____ global positioning device _____ survey _____ topographic map
_x_ other: Online King County imap - http://www.metrokc.gov/gis/mapportal/iMAP_main.htm

* Please refer to Assistance Packet for details and explanations of all questions in Parts II through V.

PART II: Well Construction and Source Information

1) Date well originally constructed: 03 / 18 / 04 month/day/year

last reconstruction: __ / __ /__ month/day/year

_____ information unavailable

2) Well driller: Stephen J Schneider – Schneider Equipment Inc.

21881 River Road NE

St. Paul, Oregon 97137

__ well driller unknown

3) Type of well:

_x_ Drilled: _x_ rotary __ bored __ cable (percussion) __ Dug

__ Other: __ spring(s) __ lateral collector (Ranney)

__ driven __ jetted __ other:

Additional comments: _____

4) Well report available? _x_ YES (attach copy to form) __ NO

If no well log is available, please attach any other records documenting well construction; e.g. boring logs, "as built" sheets, engineering reports, well reconstruction logs.

5) Average pumping rate: 2,000 (gallons/min)

Source of information: Replacement Well 4R Construction and Testing Report (CDM, 2004)

If not documented, how was pumping rate determined? _____

__ Pumping rate unknown

6) Is this source treated?

If so, what type of treatment:

_x_ disinfection _x_ filtration __ carbon filter __ air stripper __ other

Purpose of treatment (describe materials to be removed or controlled by treatment):

Water is chlorinated and filtered to remove Manganese and Arsenic

7) If source is chlorinated, is a chlorine residual maintained: _X_ YES __ NO

Residual level: minimum 0.3 ppm free after the filters (*At the point closest to the source.*)

PART III: Hydrogeologic Information

1) Depth to top of open interval: [check one]

__ < 20 ft __ 20–50 ft __ 50–100 ft __ 100–200 ft _X_ >200 ft

__ information unavailable ('<' *means less than;* '>' *means greater than*)

2) Depth to ground water (static water level):

__ < 20 ft __ 20–50 ft __ 50–100 ft _X_ >100 ft

__ flowing well/spring (artesian)

How was water level determined?

__ well log _X_ other: Measured to within 0.01 ft with electronic sounding device

_ depth to ground water unknown

3) If source is a flowing well or spring, what is the confining pressure:

_____ psi (pounds per square inch)
or
_____ feet above wellhead

4) If source is a flowing well or spring, is there a surface impoundment, reservoir, or catchment associated with this source: __ YES __ NO

5) Wellhead elevation (height above mean sea level): 352 (ft)

How was elevation determined? _X_ topographic map __ Drilling/Well Log __ altimeter

__ other: _____

___ information unavailable

6) Confining layers: (This can be completed only for those sources with a drilling log, well log or geologic report describing subsurface conditions. Please refer to assistance package for example.)

_X_ evidence of a confining layer in well log

___ no evidence of a confining layer in well log

If there is evidence of a confining layer, is the depth to ground water more than 20 feet above the **bottom** of the **lowest confining layer**? _X_ YES __ NO

__ information unavailable

7) Sanitary setback:

_X_ < 100 ft* __ 100–120 ft __ 120–200 ft __ > 200 ft

* if less than 100 ft describe the site conditions:

Well site is about 70 feet from Main Street – a gravel county road that provides access to about 12 Properties. A setback exemption was allowed by King County Health Department due to the deep (695 ft) surface seal

8) Wellhead construction:

_X_ wellhead enclosed in a wellhouse

_X_ controlled access (describe): The well will be locked in a wellhouse that is monitored via telemetered security systems

__ other uses for wellhouse (describe): _____

__ no wellhead control

9) Surface seal:

__ 18 ft

__ < 18 ft (no Department of Ecology approval) ('<' *means less than*)

__ < 18 ft (Approved by Ecology, include documentation)('<' *means less than*)

_x_ > 18 ft ('>' *means greater than*)

__ depth of seal unknown

__ no surface seal

10) Annual rainfall (inches per year):

__ < 10 in/yr __ 10–25 in/yr _X_ > 25 in/yr

PART IV: Mapping Your Ground Water Resource

1) Annual volume of water pumped: 359,739,504 (gallons)

How was this determined?

__ meter

__ estimated: __ pumping rate (_____)

__ pump capacity (_____)

X other: Water Rights

2) "Calculated Fixed Radius" estimate of ground water movement:
(see Instruction Packet)

6 month ground water travel time : 780 (ft)

1 year ground water travel time : 1,103 (ft)

5 year ground water travel time: 2,467 (ft)

10 year ground water travel time: 3,489 (ft)

Information available on length of screened/open interval?

X YES__ NO

Length of screened/open interval: 85 (ft)

3) Is there a river, lake, pond, stream, or other obvious surface water body within the 6 month time of travel boundary? X YES __ NO (mark and identify on map).

4) Is there a stormwater and/or wastewater facility, treatment lagoon, or holding pond located within the 6 month time of travel boundary? X YES __ NO (mark and identify on map).

Comments: A large wetland occupies the north half of the 6-month time of travel boundary. Septic Systems serve the homes along Main Street. A gravity sewer line runs parallel along Main Street

PART V: Assessment of Water Quality

1) Regional sources of risk to ground water:

Please indicate if any of the following are present within a circular area around your water source having a radius up to and including the five year ground water travel time:

	6 month	1 year	5 year	unknown
likely pesticide application	_____	_____	_____	__X__
stormwater injection wells	_____	_____	_____	_____
other injection wells (See Comments)	__X__	__X__	__X__	_____
abandoned ground water well	_____	_____	_____	_____
landfills, dumps, disposal areas	_____	_____	_____	_____
known hazardous materials clean-up site	_____	_____	_____	_____
water system(s) with known quality problems	_____	_____	_____	_____
population density > 1 house/acre	_____	_____	_____	_____
residences commonly have septic tanks	_____	_____	_____	_____
Wastewater treatment lagoons	_____	_____	_____	_____
sites used for land application of waste	_____	_____	_____	_____

Mark and identify on map any of the risks listed above which are located within the 6 month time of travel boundary? (*Please include a map of the wellhead and time of travel areas with this form. Please locate and mark any of the following*.)

If other recorded or potential sources of ground water contamination exist within the ten year time of travel circular zone around your water supply, please describe:

The Wellhead Protection Program for Plateau and Cascade View wells Report prepared in June 24, 1998 for the Sammamish Plateau Water & Sewer District discussed the ground water flow for the Plateau area wells. Well 4R is in Zone IV. The top of Zone IV occurs at elevations of approximately 340 to 500 feet below sea level. Sections related to potential sources for the Zone IV and shallower Zone III aquifers are attached and used to Answer the questions in the above survey. Well 5 continues to be used as a recharge well as part of a groundwater recharge project. Potable system groundwater is used for the injection source.

2) Source specific water quality records:

Please indicate the occurrence of any test results since 1986 that meet the following conditions: (Unless listed on assessment, MCLs are listed in assistance package.)

A. Nitrate: (Nitrate MCL = 10 mg/l)	YES	NO
Results greater than MCL	____	_X
< 2 mg/liter nitrate	_X _	
2–5 mg/liter nitrate	____	
> 5 mg/liter nitrate	____	
Nitrate sampling records unavailable	____	

B. VOCs: (VOC detection level 0.5 ug/l or 0.0005 mg/l.)	YES	NO
Results greater than MCL or SAL	____	_X
VOCs detected at least once	____	_X
VOCs never detected	__X__	
VOC sampling records unavailable	____	_X

C. EDB/DBCP:	YES	NO
(EDB MCL = 0.05 ug/l or 0.00005 mg/l. DBCP MCL = 0.2 ug/l or 0.0002 mg/l.)		
EDB/DBCP detected below MCL at least once	____	
EDB/DBCP detected above MCL at least once	____	
EDB/DBCP never detected	____	
EDB/DBCP tests required but not yet completed	____	
EDB/DBCP tests not required	_X__	

D. Other SOCs (Pesticides):	YES
Other SOCs detected (pesticides and other synthetic organic chemicals)	____
Other SOC tests performed but none detected (list test methods in comments)	____
Other SOC tests not performed	_X__

If any SOCs in addition to EDB/DBCP were detected, please identify and date. If other SOC tests were performed, but no SOCs detected, list test methods here: _____

_____

_____

_____

E. Bacterial contamination: YES NO

Any bacterial detection(s) in the past 3 years in samples taken from the source (not distribution sampling records).....____ __X_

Has source (in past 3 years) had a bacteriological contamination problem found in distribution samples that was attributed to the source.....____ __X__

Source sampling records for bacteria unavailable ____

Part VI: Geographic or Hydrologic Factors Contributing to a Non-Circular Zone of Contribution

The following questions will help identify those ground water systems which may not be accurately represented by the calculated fixed radius (CFR) method described in Part IV. For these sources, the CFR areas should be used as a preliminary delineation of the critical time of travel zones for that source. As a system develops its Wellhead Protection Plan for theses sources, a more detailed delineation method should be considered.

1) Is there evidence of obvious hydrologic boundaries within the 10 year time of travel zone of the CFR? (Does the largest circle extend over a stream, river, lake, up a steep hillside, and/or over a mountain or ridge?)

__ YES _X_ NO

Describe with references to map produced in Part IV:

_____

_____

2) Aquifer Material:

A) Does the drilling log, well log or other geologic/engineering reports identify that the well is located in an area where the underground conditions are identified as fractured rock and/or basalt terrain?

__ YES _X_ NO

B) Does the drilling log, well log or other geologic/engineering reports indicate that the well is located in an area where the underground conditions are primarily identified as coarse sand and gravel?

_X_ YES __ NO

3) Is the source located in an aquifer with a high horizontal flow rate? (These can include sources located on flood plains of large rivers, artesian wells with high water pressure, and/or shallow flowing wells and springs.)

__ YES _X_ NO

4) Are there other high capacity wells (agricultural, municipal and/or industrial) located within the CFRs? YES

a) Presence of ground water extraction wells removing more than approximately 500 gal/min within...

	YES	NO	unknown
< 6 month travel time	___	_X_	____
6 month–1 year travel time	___	_X_	____
1–5 year travel time	_X_	___	____
5–10 year travel time	___	_X_	____

b) Presence of ground water recharge wells (dry wells) or heavy irrigation within...

	YES	NO	unknown
< 1 year travel time	_X__	___	____
1–5 year travel time	___	___	____
5–10 year travel time	___	___	____

Please identify or describe additional hydrologic or geographic conditions that you believe may affect the shape of the zone of contribution for this source. Where possible, reference them to locations on the map produced in Part IV.

The Wellhead Protection Program for Plateau and Cascade View wells Report prepared in June 24, 1998

for the Sammamish Plateau Water & Sewer District discussed the ground water flow for the Plateau area wells.

The ground water flow directions within each aquifer zone were evaluated using static water level from wells

completed within the aquifer zone. Well 4R is in Zone IV. The top of Zone IV occurs at elevations of approximately

340 to 500 feet below sea level. A potentiometric surface map for wells completed in Zone IV shows that ground

water flow is generally to the west and northwest direction.

Suggestions and Comments

Did you attend one of the susceptibility workshops? __ YES _X_ NO

Did you find it useful? __ YES __ NO

Did you seek outside assistance to complete the assessment? _X_ YES __ NO

- -

This form and instruction packet are still in the process of development. Your comments, suggestions and questions will help us upgrade and improve this assessment form. If you found particular sections confusing or problematic please let us know. How could this susceptibility assessment be improved or made clearer? Did the instruction package help you find the information needed to complete the assessment? How much time did it take you to complete the form? Were you able to complete the assessment without additional/outside expertise? Do you feel the assessment was valuable as a learning experience? Any other comments or constructive criticisms you have would be appreciated.

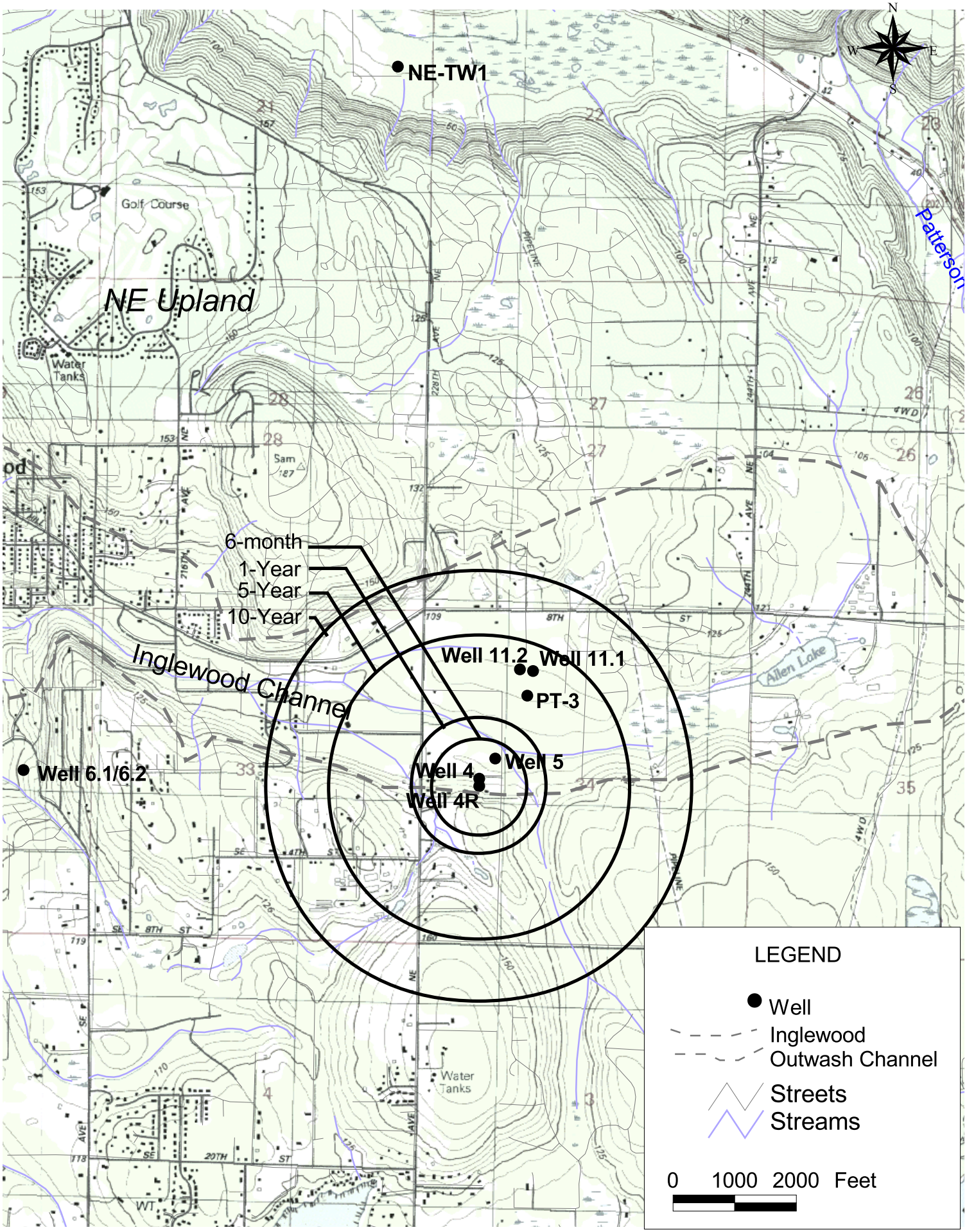

CDM

Sammamish Plateau Water and Sewer District
Well 4R Calculated Fixed Radius Map

Figure A-1

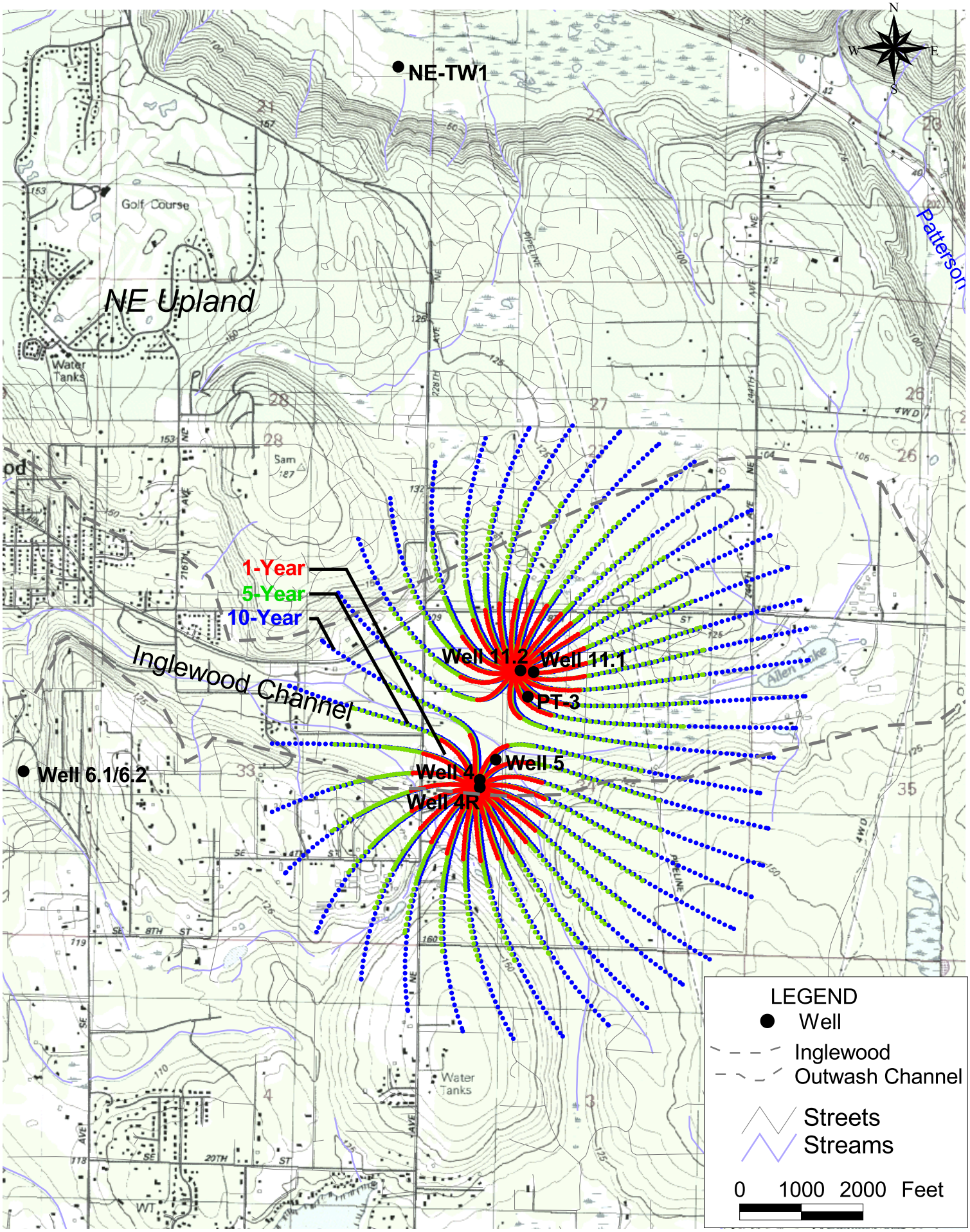

CDM

Sammamish Plateau Water and Sewer District
Well 4R & Well 11.2 Capture Zone Delineations

Figure 9

Table A-1: Input Data for EPA WHPA Code 2.2 Analytical Models

Zone/Well Name	Zone IV / 4R, 11.2

GPTRAC Semi-analytical Options

Variable Name	Symbol	Value
Aquifer type	IAQFR	Confined
Transmissivity	TRANSM	5561 FT2/DAY
Hydraulic gradient	GRADNT	0.002
Ambient flow direction	ALPHA	180°
Porosity	POROS	20 percent
Saturated thickness	B	100 to 200 ft
Confining bed hydraulic conductivity[1]	KPRIM	10^{-1} gal/day/ft2
Confining bed thickness[1]	BPRIM	92 ft
Areal recharge rate[2]	CAPN	NA
Original saturated thickness[2]	CAPH	NA
Maximun radius of influence[2]	RMAX	NA
Boundary conditions	IBOUND	None
Well pumping rate (4R, 11.2)	QPWELL	2,000, and 1,800 gpm
Well recharge rate	QRWELL	NA
X-coordinate (ft) (4R, 11.2)	XPWELL	1,344,847, 1,345,493
Y-coordinate (ft) (4R, 11.2)	YPWELL	224,324, 226,241

1Leaky confined aquifers only; 2 Unconfined aquifers only
NA Not applicable

COMMENTS
Ambient flow direction is measured counterclockwise from x-axis. Well pumping rate was estimated from water right application.

GROUND WATER CONTAMINATION
Susceptibility Assessment Survey Form

SAMMAMISH PLATEAU WATER & SEWER DISTRICT
1510 228th Avenue S.E.
Issaquah, Washington 98027

WELL NO. 6

GROUND WATER CONTAMINATION
Susceptibility Assessment Survey Form

TABLE OF CONTENTS

- Susceptibility Assessment Survey Form
- Sammamish Plateau Well 6 WHPA Capture Zones
- Well Log
- Elevation Illustration
- Water Facilities Inventory Form
- Inorganic Chemical Analysis 1989 - 1993

Ground Water Contamination
Susceptibility Assessment Survey Form
Version 2.1

IMPORTANT! Please complete one form for each ground water source (well, wellfield, spring) used in your water system. Photocopy as necessary.

PART I: System Information

Well owner/manager : SAMMAMISH PLATEAU WATER & SEWER DIST.

Water system name : SAMMAMISH PLATEAU WATER & SEWER DIST

County: KING

Water system number: 409009 Source number: 505

Well depth: 365 (ft.) (*From WFI form*)

Source name: WELL 6

WA well identification tag number: ___ ___ ___-___ ___ ___

_____ well not tagged

Number of connections: 9000 Population served*: 26,000

Township: 25 N Range: 06E

Section: 32 1/4 1/4 Section: NE/SE

Latitude/longitude (if available): _____/_____

How was lat./long. determined?

_____ global positioning device _____ survey _____ topographic map
____other: _____

* Please refer to Assistance Packet for details and explanations of all questions in Parts II through V.

PART II: Well Construction and Source Information

1) Date well originally constructed: 8 / __ / 80 month/day/year

last reconstruction: __ / __ / __ month/day/year

_____ information unavailable

2) Well driller: STORY T ARMSTRONG
10715 66TH AVE E.
PUYALLUP WA.

___ well driller unknown

3) Type of well:

X Drilled: ___ rotary ___ bored X cable (percussion) ___ Dug

___ Other: ___ spring(s) ___ lateral collector (Ranney)

___ driven ___ jetted ___ other: _____

Additional comments: _____

4) Well report available? X YES (attach copy to form) ___ NO

If no well log is available, please attach any other records documenting well construction; e.g. boring logs, "as built" sheets, engineering reports, well reconstruction logs.

5) Average pumping rate: 600 (gallons/min)

Source of information: WATER FACILITIES INVENTORY

If not documented, how was pumping rate determined? _____

___ Pumping rate unknown

6) Is this source treated? YES

If so, what type of treatment:

___ disinfection ___ filtration ___ carbon filter ___ air stripper X other

Purpose of treatment (describe materials to be removed or controlled by treatment):
CHLORINATION FOR ODOR CONTROL

7) If source is chlorinated, is a chlorine residual maintained: ___ YES X NO

Residual level: _____ *(At the point closest to the source.)*

PART III: Hydrogeologic Information

1) Depth to top of open interval: [check one]

___ < 20 ft ___ 20–50 ft ___ 50–100 ft ___ 100–200 ft X >200 ft

___ information unavailable ('< ' *means less than;* '> ' *means greater than*)

2) Depth to ground water (static water level):

___ < 20 ft ___ 20–50 ft ___ 50–100 ft X > 100 ft

___ flowing well/spring (artesian)

How was water level determined?

X well log ___ other: _____

___ depth to ground water unknown

3) If source is a flowing well or spring, what is the confining pressure: N/A

_____ psi (pounds per square inch)
or
_____ feet above wellhead

4) If source is a flowing well or spring, is there a surface impoundment, reservoir, or catchment associated with this source: ___ YES ___ NO N/A

5) Wellhead elevation (height above mean sea level): 280 (ft)

How was elevation determined? ___ topographic map X Drilling/Well Log ___ altimeter

___ other: _____

___ information unavailable

6) Confining layers: (This can be completed only for those sources with a drilling log, well log or geologic report describing subsurface conditions. Please refer to assistance package for example.)

YES evidence of a confining layer in well log

___ no evidence of a confining layer in well log

If there is evidence of a confining layer, is the depth to ground water more than 20 feet above the top of the open interval? X YES ___ NO

___ information unavailable

7) Sanitary setback:

___ < 100 ft* X 100–120 ft ___ 120–200 ft _ _ > 200 ft
* if less than 100 ft describe the site conditions:

_____

_____

_____

_____

8) Wellhead construction:

X wellhead enclosed in a wellhouse

X controlled access (describe): FENCED + GATED (LOCKED)

_____

___ other uses for wellhouse (describe): _____

_____

___ no wellhead control

9) Surface seal:

___ 18 ft

___ < 18 ft (no Department of Ecology approval) (*'<' means less than*)

___ < 18 ft (Approved by Ecology, include documentation) (*'<' means less than*)

X > 18 ft (*'>' means greater than*)

___ depth of seal unknown

___ no surface seal

10) Annual rainfall (inches per year):

___ < 10 in/yr ___ 10–25 in/yr X > 25 in/yr

PART IV: Mapping Your Ground Water Resource

1) Annual volume of water pumped: 15,477,100 (gallons)

How was this determined?

X meter

___ estimated: ___ pumping rate (_____)

___ pump capacity (_____)

___ other: _____

2) "Calculated Fixed Radius" estimate of ground water movement:
(see Instruction Packet)

6 month ground water travel time : 280 (ft)

1 year ground water travel time : 390 (ft)

5 year ground water travel time: 880 (ft)

10 year ground water travel time: 1240 (ft)

Information available on length of screened/open interval?

X YES ___ NO

Length of screened/open interval: 20 (ft)

3) Is there a river, lake, pond, stream, or other obvious surface water body within the 6 month time of travel boundary? ___ YES X NO (mark and identify on map).

4) Is there a stormwater and/or wastewater facility, treatment lagoon, or holding pond located within the 6 month time of travel boundary? ___ YES X NO (mark and identify on map).

Comments: _____

PART V: Assessment of Water Quality

1) Regional sources of risk to ground water:

Please indicate if any of the following are present within a circular area around your water source having a radius up to and including the five year ground water travel time:

	6 month	1 year	5 year	unknown
likely pesticide application	✓	✓	✓	
stormwater injection wells	No	No	No	
other injection wells	No	No	No	
abandoned ground water well				✓
landfills, dumps, disposal areas	No	No	No	
known hazardous materials clean-up site	No	No	No	
water system(s) with known quality problems				✓
population density > 1 house/acre	YES	YES	YES	
residences commonly have septic tanks	✓	✓	✓	
Wastewater treatment lagoons	No	No	No	
sites used for land application of waste	No	No	No	

Mark and identify on map any of the risks listed above which are located within the 6 month time of travel boundary? (*Please include a map of the wellhead and time of travel areas with this form. Please locate and mark any of the following.*)

If other recorded or potential sources of ground water contamination exist within the ten year time of travel circular zone around your water supply, please describe:

_____

_____

_____

_____

_____

_____

2) Source specific water quality records:

Please indicate the occurrence of any test results since 1986 that meet the following conditions: (Unless listed on assessment, MCLs are listed in assistance package.)

A. Nitrate: (Nitrate MCL = 10 mg/l)	YES	NO
Results greater than MCL		X
< 2 mg/liter nitrate	X	
2-5 mg/liter nitrate		
> 5 mg/liter nitrate		
___ Nitrate sampling records unavailable		

B. VOCs: (VOC detection level 0.5 ug/l or 0.0005 mg/l.)	YES	NO
Results greater than MCL or SAL		X
VOCs detected at least once		X
VOCs never detected	X	
___ VOC sampling records unavailable		

C. EDB/DBCP: (EDB MCL = 0.05 ug/l or 0.00005 mg/l. DBCP MCL = 0.2 ug/l or 0.0002 mg/l.)	YES	NO
EDB/DBCP detected below MCL at least once		
EDB/DBCP detected above MCL at least once		
EDB/DBCP never detected		
___ EDB/DBCP tests required but not yet completed		
X EDB/DBCP tests not required		

D. Other SOCs (Pesticides):	YES	NO
Other SOCs detected (pesticides and other synthetic organic chemicals)		

___ Other SOC tests performed but none detected
(list test methods in comments
X Other SOC tests not performed

If any SOCs in addition to EDB/DBCP were detected, please identify and date. If other SOC tests were performed, but no SOCs detected, list test methods here: _____

E. Bacterial contamination:

	YES	NO
Any bacterial detection(s) in the past 3 years in samples taken from the source (not distribution sampling records).	___	X
Has source (in past 3 years) had a bacteriological contamination problem found in distribution samples that was attributed to the source.	___	X

___ Source sampling records for bacteria unavailable

Part VI: Geographic or Hydrologic Factors Contributing to a Non-Circular Zone of Contribution

The following questions will help identify those ground water systems which may not be accurately represented by the calculated fixed radius (CFR) method described in Part IV. For these sources, the CFR areas should be used as a preliminary delineation of the critical time of travel zones for that source. As a system develops its Wellhead Protection Plan for theses sources, a more detailed delineation method should be considered.

1) Is there evidence of obvious hydrologic boundaries within the 10 year time of travel zone of the CFR? (Does the largest circle extend over a stream, river, lake, up a steep hillside, and/or over a mountain or ridge?)

✓ YES ___ NO

Describe with references to map produced in Part IV:

STEEP HILLSIDE + ravine. This area is on the hillside coming down from the East Sammamish Plateau to Lake Sammamish.

2) Aquifer Material:

A) Does the drilling log, well log or other geologic/engineering reports identify that the well is located in an area where the underground conditions are identified as fractured rock and/or basalt terrain?

___ YES ✓ NO

B) Does the drilling log, well log or other geologic/engineering reports indicate that the well is located in an area where the underground conditions are primarily identified as coarse sand and gravel?

✓ YES ___ NO

3) Is the source located in an aquifer with a high horizontal flow rate? (These can include sources located on flood plains of large rivers, artesian wells with high water pressure, and/or shallow flowing wells and springs.)

___ YES ✓ NO

4) Are there other high capacity wells (agricultural, municipal and/or industrial) located within the CFRs? No

a) Presence of ground water extraction wells removing more than approximately 500 gal/min within...

	YES	NO	unknown
< 6 month travel time	___	✓	___
6 month–1 year travel time	___	✓	___
1–5 year travel time	___	✓	___
5–10 year travel time	___	✓	___

b) Presence of ground water recharge wells (dry wells) or heavy irrigation within...

	YES	NO	unknown
< 1 year travel time	___	✓	___
1–5 year travel time	___	✓	___
5–10 year travel time	___	✓	___

Please identify or describe additional hydrologic or geographic conditions that you believe may affect the shape of the zone of contribution for this source. Where possible, reference them to locations on the map produced in Part IV.

Suggestions and Comments

Did you attend one of the susceptibility workshops? X YES ___ NO

Did you find it useful? X YES ___ NO

Did you seek outside assistance to complete the assessment? X YES ___ NO

This form and instruction packet are still in the process of development. Your comments, suggestions and questions will help us upgrade and improve this assessment form. If you found particular sections confusing or problematic please let us know. How could this susceptibility assessment be improved or made clearer? Did the instruction package help you find the information needed to complete the assessment? How much time did it take you to complete the form? Were you able to complete the assessment without additional/outside expertise? Do you feel the assessment was valuable as a learning experience? Any other comments or constructive criticisms you have would be appreciated.

Sammamish Plateau Water & Sewer District
Well 6

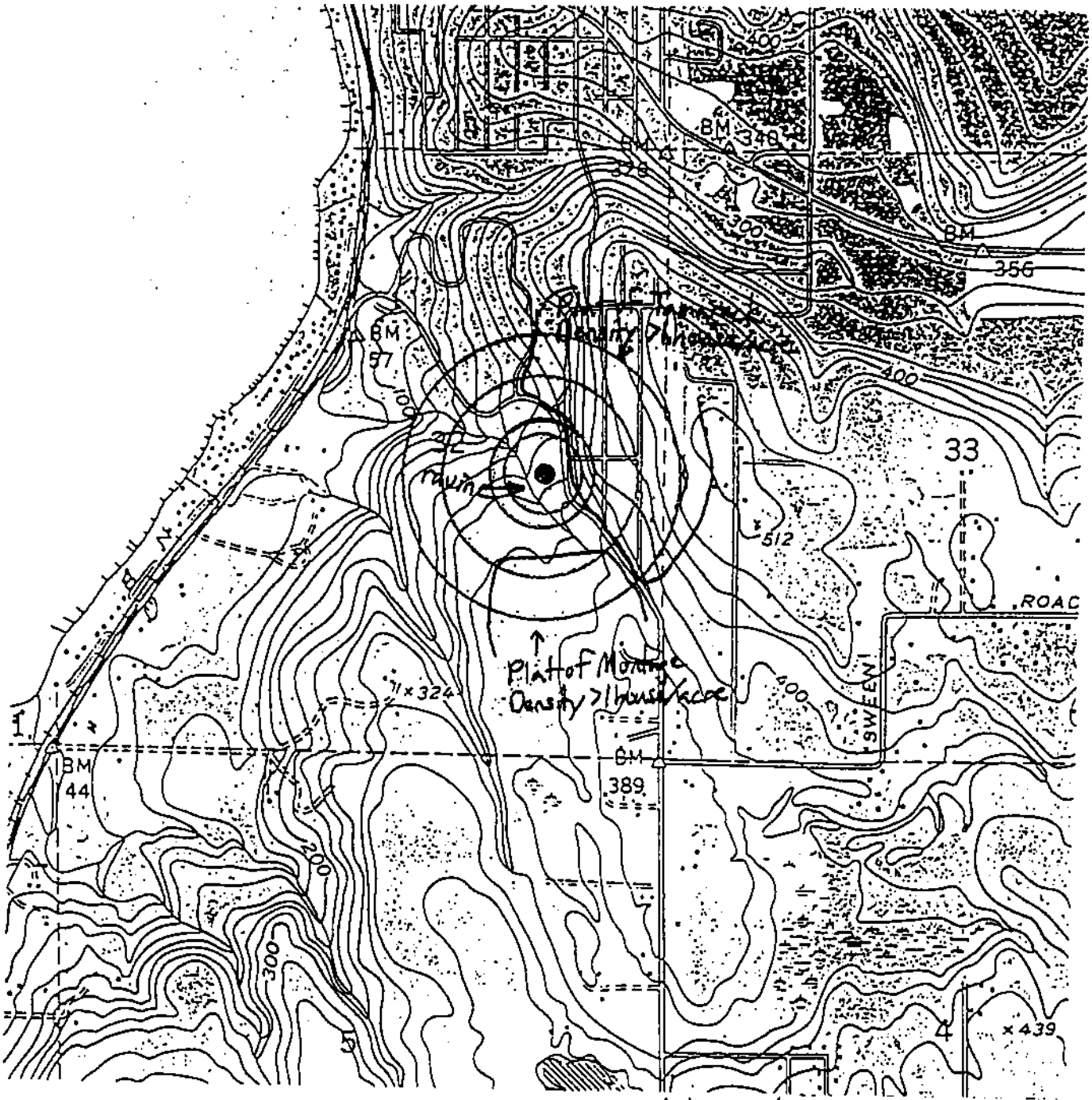

All residences, except those in the Plat of Montage are served by septic tanks.

"LEGEND"

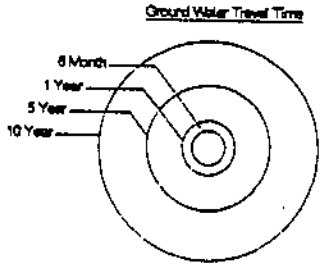

SCALE (FT)

0 1000 2000 3000 4000 5000

File Original and First Copy with Department of Ecology
Second Copy — Owner's Copy
Third Copy — Driller's Copy

WATER WELL REPORT

STATE OF WASHINGTON

Application No. G1-23897
Permit No. G1-23897

(1) OWNER: Name KING COUNTY WATER DIST. 82 Address 1510 228th AVE. S.E. ISSAQUAH

(2) LOCATION OF WELL: County KING — NE¼ SE¼ Sec 32 T 25 N. R 6E W.M.

Bearing and distance from section or subdivision corner 2538 ft N & 1020 ft W of SE cor Sec 22-25-6 E

(3) PROPOSED USE: Domestic ☐ Industrial ☐ Municipal ☒ Irrigation ☐ Test Well ☐ Other ☐

(4) TYPE OF WORK: Owner's number of well (if more than one) 6
New well ☒ Method: Dug ☐ Bored ☐
Deepened ☐ Cable ☒ Driven ☐
Reconditioned ☐ Rotary ☐ Jetted ☐

(5) DIMENSIONS: Diameter of well 12" inches.
Drilled 366 ft. Depth of completed well 366 ft.

(6) CONSTRUCTION DETAILS:
Casing installed: 16" Diam. from 0 ft. to 20 ft.
Threaded ☐ 12" Diam. from 0 ft. to 366 ft.
Welded ☒ Diam. from ft. to
$500.00
Perforations: Yes ☐ No ☒
Type of perforator used
SIZE of perforations in. by in.
perforations from ft. to ft.
perforations from ft. to ft.
perforations from ft. to ft.
Screens: Yes ☒ No ☐
Manufacturer's Name JOHNSON
Type STAINLESS Model No.
Diam. 6 Slot size 50 from 340 ft. to 360 ft.
Diam. Slot size from ft. to ft.
Gravel packed: Yes ☒ No ☐ Size of gravel MONTERY 5
Gravel placed from 325 ft. to 366 ft.
Surface seal: Yes ☒ No ☐ To what depth? 20 ft.
Material used in seal CONCRETE
Did any strata contain unusable water? Yes ☐ No ☒
Type of water? Depth of strata
Method of sealing strata off

(7) PUMP: Manufacturer's Name PEERLESS
Type TURBINE HP 125

(8) WATER LEVELS: Land-surface elevation above mean sea level 280 ft.
Static level 112.1 ft. below top of well Date 8/80
Artesian pressure lbs. per square inch Date
Artesian water is controlled by (Cap, valve, etc.)

(9) WELL TESTS: Drawdown is amount water level is lowered below static level
Was a pump test made? Yes ☒ No ☐ If yes, by whom? DRILLER
Yield: 600 gal./min. with 142 ft. drawdown after 6 hrs.

Recovery data (time taken as zero when pump turned off) (water level measured from well top to water level)

Time	Water Level	Time	Water Level	Time	Water Level
1	160'	1000	119'		
10	145'				
100	132'				

Date of test 8-4-80
Bailer test gal./min. with ft. drawdown after hrs.
Artesian flow g.p.m. Date
Temperature of water Was a chemical analysis made? Yes ☒ No ☐

(10) WELL LOG:

Formation: Describe by color, character, size of material and structure, and show thickness of aquifers and the kind and nature of the material in each stratum penetrated, with at least one entry for each change of formation.

MATERIAL	FROM	TO
SAND & GRAVEL W/CLAY	0	37
SANDY CLAY	37	50
SAND & GRAVEL W/ CLAY	50	68
COMPACTED SAND & GRAVEL	68	108
BROWN SAND AND GRAVEL	108	142
WATER BEARING		
BROWN FINE SAND	142	178
GRAY SILT FINE SAND	178	214
& CLAY LAYER OF PEAT		
GRAY VERY FINE SAND	214	250
GRAY VERY DIRTY FINE	250	280
TO MED. SAND		
SILT & CLAY W/ SAND LAYERS	280	296
DARK GRAY SILT & CLAY	296	339
GRAY POORLY SORTED SAND	339	362
& GRAVEL		
SILT & CLAY & FINE SAND	362	366

Work started JULY 1980 Completed Sept. 1980

WELL DRILLER'S STATEMENT:
This well was drilled under my jurisdiction and this report is true to the best of my knowledge and belief.

NAME Story & Armstrong
(Person, firm, or corporation) (Type or print)

Address 10715 - 66th Av. East Puyallup, Wn

[Signed] [signature] (Well Driller)

License No. 0492 Date 9-17 1982

(USE ADDITIONAL SHEETS IF NECESSARY)

7-80-1-20

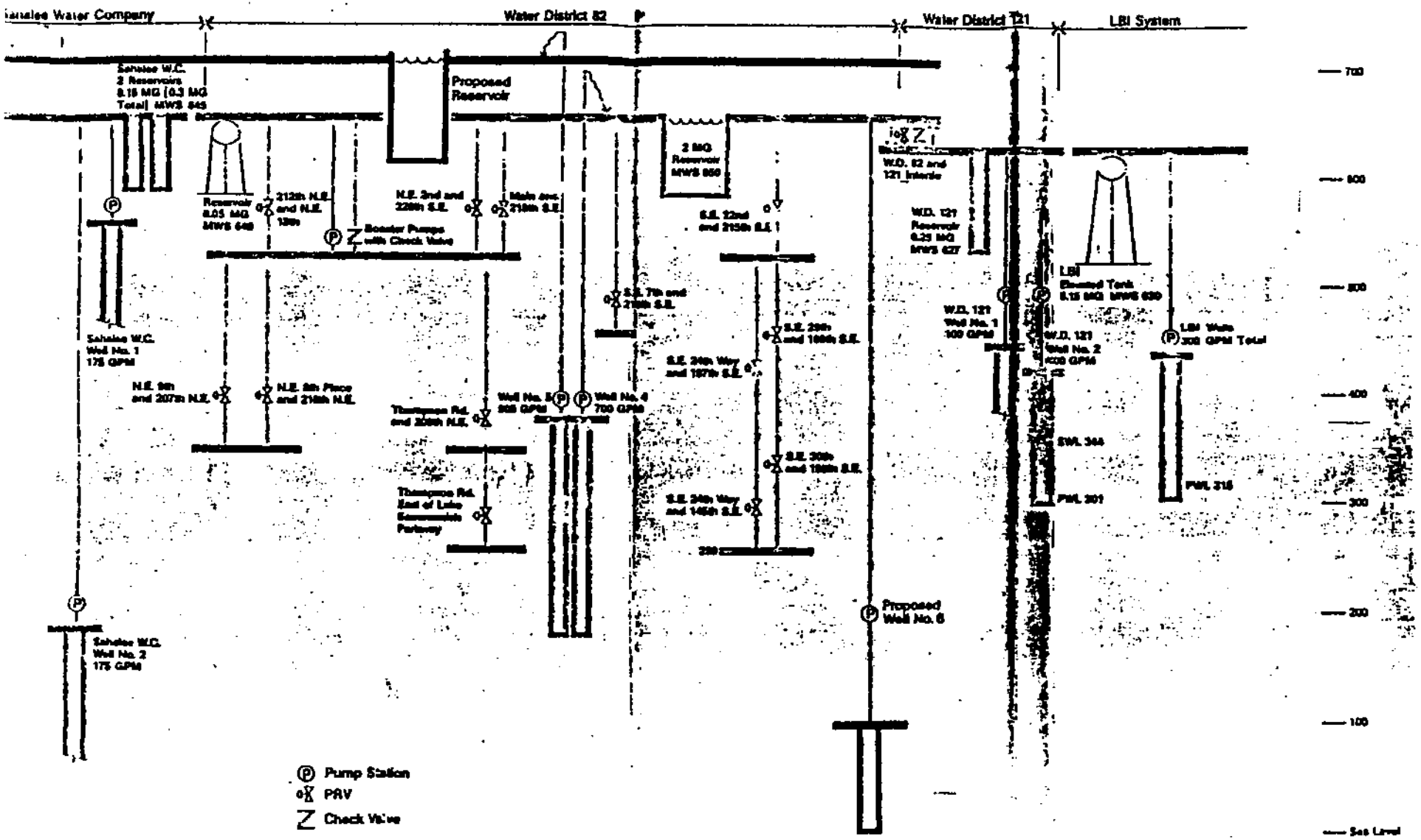
Water District 82
Water District 121
LBI System
Proposed Reservoir
2 MG Reservoir MWS 850
Proposed Well No. 6
Pump Station
PRV
Check Valve
700
600
500
400
300
200
100
Sea Level

Health
Environmental Health

WATER FACILITIES INVENTORY (WFI)

Read instructions on back before completing

DATE RECEIVED FEB 1 1994
Ads'd.....
DATE UPDATED 01/11/94

1. SYSTEM ID NO.	2. COUNTY	GROUP	TYPE	WRIA
90000	KING	A	COMM	9

3. SYSTEM NAME: SAMMAMISH PLATEAU WATER & SEWER

STREET ADDRESS: 1510 228TH AVE SE.

P.O. BOX (IF APPLICABLE):

CITY: ISSAQUAH STATE: WA ZIP CODE: 98027

4. OWNER'S NAME (LAST, FIRST): SAMMAMISH PLATEAU WATER & OWNER NO. 3007

STREET ADDRESS: 1510 228TH AVE. S.E.

P.O. BOX (IF APPLICABLE):

CITY: ISSAQUAH STATE: WA ZIP CODE: 98027

5. SYSTEM CONTACT PERSON: RONALD E. LITTLE TITLE: MANAGER

DAY TELEPHONE: 206-392-6256 EVENING TELEPHONE:

WFI COMPLETED BY: TITLE:

DAY TELEPHONE: DATE:

8. SUBMITTED FOR: [ ] NEW SYSTEM [ ] SYSTEM NAME CHANGE* [ ] NO CHANGE [ ] UPDATE [ ] REACTIVATE [ ] DELETE

*OLD SYSTEM NAME - ENTER ONLY IF CHANGING WITH THIS WFI

6. OWNERSHIP (CHECK ONE ONLY)

- [ ] PRIVATE: NON-PROFIT
- [ ] PRIVATE: FOR-PROFIT
- [X] LOCAL GOVERNMENT (COUNTY/CITY/PUD/WATER DISTRICT)
- [ ] STATE
- [ ] FEDERAL

7. PREDOMINANT CHARACTERISTIC (CHECK ONE ONLY)

- [X] RESIDENTIAL
- [ ] RECREATIONAL
- [ ] BUSINESS/INDUSTRIAL/AGRICULTURAL/COMMERCIAL
- [ ] LODGING/FOOD SERVICE
- [ ] SCHOOL/DAY CARE
- [ ] OTHER (CHURCHES, ETC.)

SYSTEMS SERVING ANY RESIDENTS (PEOPLE LIVING IN A DWELLING SERVED BY THE SYSTEM), COMPLETE THIS SECTION

9. NUMBER ACTIVE RESIDENTIAL CONNECTIONS: 8844

10. NUMBER ACTIVE RESIDENTIAL POPULATION: 25,647

SYSTEMS SERVING ANY NON-RESIDENTS (I.E., TRAVELERS, EMPLOYEES, STUDENTS, ETC.), COMPLETE THIS SECTION

11. NUMBER NON-RESIDENTIAL CONNECTIONS:

12. ENTER AVERAGE DAILY NON-RESIDENTIAL POPULATION SERVED FOR EACH MONTH. MAKE ENTRY FOR EACH MONTH

JAN		JULY	
	MAY		NOV.
MAR		SEP	

13. DOES THE SYSTEM SERVE AT LEAST 25 OF THE SAME NON-RESIDENTS FOR 4 OR MORE DAYS PER WEEK FOR AT LEAST 180 DAYS PER YEAR? [ ] YES [X] NO

14. TOTAL NUMBER CONNECTIONS METERED: 8,844

15. DISTRIBUTION RESERVOIR(S) TOTAL CAPACITY: 12,850,000 GALLONS

16. DOH SOURCE NUMBER	17. SOURCE NAME (LIST UTILITY'S NAME FOR SOURCE. IF SOURCE IS PURCHASED OR INTERTIED, LIST SELLER'S ID# AND NAME USING FOLLOWING FORMAT: XXXXXX/NAME EXAMPLE: 77050Y/SEATTLE)	18. SOURCE CATEGORY: WELL	WELL FIELD	SURFACE	SPRING	RAINEY/INF. GAL.	INTERTIE	PURCHASE-TREATED	PURCHASE-UNTREATED	19. USE: PERMANENT	SEASONAL	EMERGENCY	20. SOURCE METERED	21. TREATMENT: NONE	CHLORINATION	FILTRATION	FLUORIDATION	OTHER	22. WELL DEPTH (FEET)	23. SOURCE CAPACITY (GPM)	24. SOURCE LOCATION: 1/4, 1/4 SEC.	SEC. NO.	TWP	RNG.	SWTR EVALUATION / VOC EVALUATION
001	WELL 1	X							X					X					154	500	SW/NE	10	24N	06E	
002	WELL 2	X								X				X					132	360	NW/SE	11	24N	06E	
003	WELL # 5	X							X						X				716	450	NW/SW	34	25N	06E	
004	WELL # 4	X							X						X				714	625	SW/NW	34	25N	06E	
005	WELL 6	X								X					X				365	500	NE/SE	32	25N	06E	
006	WELL #7	X								X				X					150	2,000	SE/SE	21	24N	06E	
007	WELL #8	X							X					X					150	3,500	SE/SE	21	24N	06E	

MINIMUM REQUIRED BACTERIOLOGICAL SAMPLING SCHEDULE

25.	26. JAN	FEB	MAR	APR	MAY	JUN	JUL	AUG	SEP	OCT	NOV	DEC
	30	30	30	30	30	30	30	30	30	30	30	30

10. APPROVED SERVICES (PER PLANS): 0 DATE OF LAST SANITARY SURVEY: 0000 BY DOH [ ] LHD [ ]

SYSTEM IN CRITICAL WATER SUPPLY SERVICE AREA? [X] YES [ ] NO GW MGMT AREA? [ ] YES [ ] NO FOR LHO USE ONLY

EFFECTIVE DATE RETRO. CHANGES: SIGNATURE OF DOH REVIEWER: DATE:

WATER SYSTEM

1989

SAMMAMISH PLATEAU WATER & SEWER DISTRICT

WATER SAMPLE INFORMATION FOR INORGANIC CHEMICAL ANALYSES - 1989

ITEM	WELL 1 8/4/89	WELL 2 4/10/89	WELL 4 4/10/89	WELL 5 4/10/89	WELL 6 7/17/89	WELL 7 7/17/89	WELL 8 4/10/89	*MCL
pH	7.06	7.23	8.22	8.32	7.46	7.48	*7.05	----
Arsenic	*0.010	*0.010	*0.010	*0.010	*0.010	*0.010	*0.010	0.05
Barium	*0.25	*0.25	*0.25	*0.25	*0.25	*0.25	*0.25	1.0
Cadmium	*0.002	*0.002	*0.002	*0.002	*0.002	*0.002	*0.002	0.01
Chromium	*0.010	*0.010	*0.010	*0.010	*0.010	*0.010	*0.010	0.005
Iron	*0.05	*0.05	*0.05	*0.05	*0.05	0.05	*0.05	0.3
Lead	*0.010	*0.010	*0.010	*0.010	*0.010	*0.010	*0.010	0.05
Manganese	*0.010	*0.010	0.041	0.042	0.026	*0.010	*0.010	0.05
Mercury	*0.0010	*0.0010	*0.0010	*0.0010	*0.0010	*0.0010	*0.0010	0.002
Selenium	*0.005	*0.005	*0.005	*0.005	*0.005	*0.005	*0.005	0.01
Silver	*0.010	*0.010	*0.010	*0.010	*0.010	*0.010	0.010	0.05
Sodium	*10	*10	*10	*10	*10	*10	*10	
Hardness	60	87	63	61	48	74	81	
Conductivity	155	220	160	150	120	200	200	700
Turbidity	*0.1	*0.4	*0.2	*0.1	*0.1	0.2	*0.1	1.0
Color	*5.0	*5.0	*5.0	*5.0	*5.0	15.0	*5.0	15.0
Fluoride	*0.2	*0.2	*0.2	*0.2	*0.2	*0.2	*0.2	2.0
Nitrate	1.1	*0.7	*0.2	*0.2	*0.2	1.6	*0.2	10.0
Chloride	*10	*10	*10	*10	*10	*10	*10	250
Sulfate								250

PARTS PER MILLION

*MCL Is the Maximum Contaminant Level Allowed

*Less Than

(Note: Well 7 was re-tested for Iron & Turbidity and those numbers are listed above.)

SAMMAMISH PLATEAU WATER AND SEWER DISTRICT
WATER SAMPLE INFORMATION FOR INORGANIC CHEMICAL ANALYSIS - 1990

ITEM	WELL 1 9/7/90	WELL 2 4/10/89	WELL 4 9/7/90	WELL 5 9/7/90	WELL 6 9/7/90	WELL 7 9/7/90	WELL 8 9/7/90	** MCL
pH	6.74	7.23	7.26	7.74	7.88	7.29	7.12	
Arsenic	<0.010	<0.010	<0.010	<0.010	<0.010	<0.010	<0.010	0.05
Barium	<0.25	<0.25	<0.25	<0.25	<0.25	<0.25	<0.25	1.00
Cadmium	<0.002	<0.002	<0.002	<0.002	<0.002	<0.002	<0.002	0.01
Chromium	<0.010	<0.010	<0.010	<0.010	<0.010	<0.010	<0.010	0.05
Iron	<0.05	<0.05	<0.05	<0.05	<0.05	<0.05	<0.05	0.3
Lead	<0.005	<0.0100	<0.005	<0.005	<0.005	<0.005	<0.005	0.05
Manganese	<0.010	<0.0100	<0.039	<0.037	<0.028	<0.010	<0.010	0.05
Mercury	<0.0010	<0.0010	<0.0010	<0.0010	<0.0010	<0.0010	<0.0010	0.002
Selenium	<0.05	<0.005	<0.005	<0.005	<0.005	<0.005	<0.005	0.01
Silver	<0.010	<0.0100	<0.010	<0.010	<0.010	<0.010	<0.010	0.05
Sodium	<10	<10	<10	<10	<10	<10	<11	
Hardness	79	87	58	58	51	72	72	
Conductivity	85	220	150	154	125	189	188	700
Turbidity	<0.2	<0.4000	<0.1	<0.1	<0.2	<0.1	<0.9	1.0
Color	<5.0	<5.0	<10.0	<10.0	<5.0	<5.0	<10.	15
Fluoride	<0.2	<0.2000	<0.2	<0.2	<0.2	<0.2	<0.2	2.0
Nitrate	<1.3	<0.7000	<0.2	<0.2	<0.2	<0.2	<1.3	10.0
Chloride	<10	<10	<10	<10	<10	<10	<10	250

PARTS PER MILLION

\< Less than Detectable Limits

** Maximum Contaminant Level

SAMMAMISH PLATEAU WATER AND SEWER DISTRICT
WATER SAMPLE INFORMATION FOR INORGANIC CHEMICAL ANALYSIS - 1991

ITEM	WELL 1 7/12/91	WELL 2 7/12/91	WELL 4 7/12/91	WELL 5 7/12/91	WELL 6 7/12/91	WELL 7 7/12/91	WELL 8 7/12/91	** MCL
pH	6.6	6.4	7.3	6.7	6.7	7.1	6.8	
Arsenic	<0.010	<0.010	<0.010	<0.010	<0.010	<0.010	<0.010	0.05
Barium	<0.25	<0.25	<0.25	<0.25	<0.25	<0.25	<0.25	1.00
Cadmium	<0.002	<0.002	<0.002	<0.002	<0.002	<0.002	<0.002	0.01
Chromium	<0.010	<0.010	<0.010	<0.010	<0.010	<0.010	<0.010	0.05
Iron	<0.05	<0.05	<0.05	<0.05	<0.05	<0.05	<0.05	0.3
Lead	<0.005	<0.005	<0.005	<0.005	<0.005	<0.005	<0.005	0.05
Manganese	<0.010	<0.010	<0.018	<0.026	<0.023	<0.010	<0.010	0.05
Mercury	<0.0010	<0.010	<0.0010	<0.0010	<0.0010	<0.0010	<0.0010	0.002
Selenium	<0.005	<0.005	<0.005	<0.005	<0.005	<0.005	<0.005	0.01
Silver	<0.010	<0.010	<0.010	<0.010	<0.010	<0.010	<0.010	0.05
Sodium	7.	6.	9.	8	5	10	12	
Hardness	61	66	52	51	43	61	75	
Conductivity	180	270	120	130	120	190	210	700
Turbidity	0.2	0.6	.4	<0.3	.3	.4	0.3	1.0
Color	<5.0	<5.0	<5.0	<5.0	<5.0	<5.0	<5.	15
Fluoride	<0.2	<0.2	<0.2	<0.2	<0.2	<0.2	<0.2	
Nitrate	1.2	<1.9	1.8	<0.2	<0.2	<0.2	1.3	
Chloride	<10	<10	<10	<10	21	24	<10	

SAMMAMISH PLATEAU WATER AND SEWER DISTRICT
WATER SAMPLE INFORMATION FOR INORGANIC CHEMICAL ANALYSIS - 1992

ITEM	WELL 1 2/14/92	WELL 2 2/14/92	WELL 4 2/14/92	WELL 5 2/14/92	WELL 6 2/14/92	WELL 7 2/14/92	WELL 8 7/12/91	** MCL
pH	7.0	7.3	7.93	8.4	8.4	7.7	6.8	
Arsenic	<0.010	<0.01	<0.01	<0.01	<0.01	<0.01	<0.010	.05
Barium	<0.1	<0.1	<0.1	<0.1	<0.1	<0.1	<0.25	1.00
Cadmium	<0.002	<0.002	<0.002	<0.002	<0.002	<0.002	<0.002	0.01
Chromium	<0.05	<0.05	<0.05	<0.05	<0.05	<0.05	<0.010	0.05
Iron	<0.05	<0.05	<0.05	<0.05	0.37	<0.05	<0.05	0.3
Lead	<0.002	<0.002	<0.0025	<0.002	<0.002	<0.002	<0.005	0.05
Manganese	<0.01	<0.01	0.043	<0.041	0.038	<0.01	<0.010	0.05
Mercury	<0.0002	<0.0002	<0.0002	<0.0002	<0.0002	<0.0002	<0.0010	0.002
Selenium	<0.005	<0.005	<0.005	<0.005	<0.005	<0.005	<0.005	0.01
Silver	<0.01	<0.01	<0.01	<0.01	<0.01	<0.01	<0.010	0.05
Sodium	9.5	6.1	8.7	8.4	4.8	10	12	
Hardness	85.	75	62	62	56	79	75	
Conductivity	180.	150	140	140	120	170	210	700
Turbidity	0.46	0.42	.33	0.32	.90	.32	0.3	1.0
Color	<5.0	<5.0	<5.0	<5.0	<5.0	<5.0	<5.	15
Fluoride	<0.5	<0.5	<0.5	<0.5	<0.5	<0.5	<0.2	2
Nitrate	1.0	<1.8	<1.0	<1.0	<1.0	<1.0	1.3	10
Chloride	<20.	<20	<20	<20	<20	<20	<10	250
Sulfate	10.	<10.	<10.	<10	<10	11		250
Copper	<0.02	<0.02	<0.02	<0.02	<0.02	<0.02		1.0
Zinc	<0.05	<0.05	<0.05	<0.05	<0.05	<0.05		5.0
Aluminum	<5.0	<5.0	<5.0	<5.0	<5.0	<5.0		
Calcium	19.	18.	18	18	16	20.		

SAMMAMISH PLATEAU WATER AND SEWER DISTRICT
WATER SAMPLE INFORMATION FOR INORGANIC CHEMICAL ANALYSIS - 1993

ITEM	WELL 1	WELL 2	WELL 4	WELL 5	WELL 6	WELL 7	WELL 8	WELL 9	** MCL
	3-2-93	3-2-93	3-2-93	3-2-93	3-2-93	3-2-93	3-2-93	3-2-93	
Arsenic	< 0.01	< 0.01	< 0.01	< 0.01	< 0.01	< 0.01	< 0.01	< 0.01	0.05
Barium	< 0.1	< 0.1	< 0.1	< 0.1	< 0.1	< 0.1	< 0.1	< 0.1	1
Cadmium	< 0.002	< 0.002	< 0.002	< 0.002	< 0.002	< 0.002	< 0.002	< 0.002	0.01
Chromium	< 0.05	< 0.05	< 0.05	< 0.05	< 0.05	< 0.05	< 0.05	< 0.05	0.05
Copper	< 0.02	< 0.02	< 0.02	< 0.02	< 0.02	< 0.02	< 0.02	< 0.02	1.3
Iron	< 0.05	< 0.05	< 0.05	< 0.05	< 0.05	< 0.05	< 0.05	< 0.17	0.3
Lead	< 0.002	< 0.002	< 0.002	< 0.002	< 0.002	< 0.002	< 0.002	< 0.002	0.05
Manganese	< 0.01	< 0.01	< 0.043	< 0.041	< 0.092	< 0.01	< 0.01	< 0.01	0.05
Mercury	< 0.0002	< 0.0002	< 0.0002	< 0.0002	< 0.0002	< 0.0002	< 0.0002	< 0.0002	0.002
Selenium	< 0.005	< 0.005	< 0.005	< 0.005	< 0.005	< 0.005	< 0.005	< 0.005	0.01
Silver	< 0.01	< 0.01	< 0.01	< 0.01	< 0.01	< 0.01	< 0.01	< 0.01	0.05
Sodium	9.1	9.3	9.0	7.7	8.4	9.5	10.	8.5	
Zinc	< 0.05	< 0.05	< 0.05	< 0.05	< 0.05	< 0.05	< 0.05	< 0.05	5
Hardness	78.	80	65	65	93	79	75	68	
Conductivity	190	150	160	150	210	190	190	160	700
Turbidity	0.10	0.49	0.17	0.15	0.1	0.1	0.14	0.43	1
Color	5.	5.	5.	5.	5.	5.	5.	5.	15
Chloride	< 20	< 20	< 20	< 20	< 20	< 20	< 20	< 20	250
Fluoride	< 0.5	< 0.5	< 0.5	< 0.5	< 0.5	< 0.5	< 0.5	< 0.5	2
Nitrate	< 1.0	< 1.0	< 1.0	< 1.0	< 1.0	< 1.0	< 1.1	< 1.0	10
Sulfate	< 10	< 10	< 10	< 13	< 10	< 10	< 10	< 10	250

LEGEND

< Less Than Detectable Limits

** Maximum Contaminant Level

GROUND WATER CONTAMINATION
Susceptibility Assessment Survey Form

SAMMAMISH PLATEAU WATER & SEWER DISTRICT
1510 228th Avenue S.E.
Issaquah, Washington 98027

WELL NO. 7

GROUND WATER CONTAMINATION
Susceptibility Assessment Survey Form

TABLE OF CONTENTS

- Susceptibility Assessment Survey Form
- Sammamish Plateau Well 7 WHPA Capture Zones
- Well Log
- Water Facilities Inventory Form
- Inorganic Chemical Analysis 1989 - 1993

Ground Water Contamination
Susceptibility Assessment Survey Form
Version 2.1

IMPORTANT! Please complete one form for each ground water source (well, wellfield, spring) used in your water system. Photocopy as necessary.

PART I: System Information

Well owner/manager : SAMMAMISH PLATEAU WATER + SEWER DIST.

Water system name : SAMMAMISH PLATEAU WATER + SEWER DIST

County: KING

Water system number: 409009 Source number: SO 6

Well depth: 150 (ft.) (*From WFI form*)

Source name: WELL 7

WA well identification tag number: ___ ___ ___-___ ___ ___

_____ well not tagged

Number of connections: 9000 Population served: 26,000

Township: 24 N Range: 06E

Section: 21 1/4 1/4 Section: SE/SE

Latitude/longitude (if available): _____/_____

How was lat./long. determined?

_____ global positioning device _____ survey _____ topographic map
____other: _____

* Please refer to Assistance Packet for details and explanations of all questions in Parts II through V.

PART II: Well Construction and Source Information

1) Date well originally constructed: 3 / 18 / 84 month/day/year

last reconstruction: ___ / ___ / ___ month/day/year

_____ information unavailable

2) Well driller: LOKKAIDO DRILLING & DEV.
P.O. BOX 100
GRAHAM, WA.

___ well driller unknown

3) Type of well:

X Drilled: ___ rotary ___ bored X cable (percussion) ___ Dug

___ Other: ___ spring(s) ___ lateral collector (Ranney)

___ driven ___ jetted ___ other: _____

Additional comments: _____

4) Well report available? X YES (attach copy to form) ___ NO

If no well log is available, please attach any other records documenting well construction: e.g. boring logs, "as built" sheets, engineering reports, well reconstruction logs.

5) Average pumping rate: 2,000 (gallons/min)

Source of information: WATER FACILITIES INVENTORY

If not documented, how was pumping rate determined? _____

___ Pumping rate unknown

6) Is this source treated? YES - will be

If so, what type of treatment:

___ disinfection ___ filtration ___ carbon filter ___ air stripper X other

Purpose of treatment (describe materials to be removed or controlled by treatment):

IN 1994 TREATMENT TO RAISE PH USING SODIUM HYDROXIDE - FOR CORROSION CONTROL TO BE IMPLEMENTED IN FALL OF 1994.

7) If source is chlorinated, is a chlorine residual maintained: ___ YES ___ NO N/A

Residual level: _____ *(At the point closest to the source.)*

PART III: **Hydrogeologic Information**

1) Depth to top of open interval: [check one]

___ < 20 ft ___ 20–50 ft X 50–100 ft ___ 100–200 ft ___ > 200 ft

___ information unavailable ('< ' *means less than;* '> ' *means greater than*)

2) Depth to ground water (static water level):

X < 20 ft ___ 20–50 ft ___ 50–100 ft ___ > 100 ft

___ flowing well/spring (artesian)

How was water level determined?

X well log ___ other: _____

___ depth to ground water unknown

3) If source is a flowing well or spring, what is the confining pressure: N/A

_____ psi (pounds per square inch)
or
_____ feet above wellhead

4) If source is a flowing well or spring, is there a surface impoundment, reservoir, or catchment associated with this source: ___ YES ___ NO N/A

5) Wellhead elevation (height above mean sea level): ±72 (ft)

How was elevation determined? ___ topographic map ✓ Drilling/Well Log ___ altimeter

___ other: _____

___ information unavailable

6) Confining layers: (This can be completed only for those sources with a drilling log, well log or geologic report describing subsurface conditions. Please refer to assistance package for example.)

YES evidence of a confining layer in well log

___ no evidence of a confining layer in well log

If there is evidence of a confining layer, is the depth to ground water more than 20 feet above the top of the open interval? ✓ YES ___ NO

___ information unavailable

7) Sanitary setback:

X < 100 ft* ___ 100–120 ft ___ 120–200 ft ___ > 200 ft

* if less than 100 ft describe the site conditions:

_____

_____

_____

_____

8) Wellhead construction:

X wellhead enclosed in a wellhouse

X controlled access (describe): GATED/LOCKED

_____

___ other uses for wellhouse (describe): _____

_____

___ no wellhead control

9) Surface seal:

___ 18 ft

___ < 18 ft (no Department of Ecology approval) ('< ' *means less than*)

___ < 18 ft (Approved by Ecology, include documentation) ('< ' *means less than*)

X > 18 ft ('> ' *means greater than*)

___ depth of seal unknown

___ no surface seal

10) Annual rainfall (inches per year):

___ < 10 in/yr ___ 10–25 in/yr X > 25 in/yr

PART IV: Mapping Your Ground Water Resource

1) Annual volume of water pumped: 519,977,000 (gallons)

How was this determined?

X meter

___ estimated: ___ pumping rate (_____)

___ pump capacity (_____)

___ other: _____

2) "Calculated Fixed Radius" estimate of ground water movement:
(see Instruction Packet)

6 month ground water travel time : 800 (ft)

1 year ground water travel time : 1140 (ft)

5 year ground water travel time: 2540 (ft)

10 year ground water travel time: 3590 (ft)

The Sammamish Plateau Water + Sewer District Participated in the Lower Issaquah Valley Wellhead Protection Plan. The Figures for 1yr, 5yr + 10yr Capture Zones are attached, as well as figures regarding potential contamination sources. A copy of the report is also included. District Wells 7 + 8 are considered combined.

Information available on length of screened/open interval?

✓ YES ___ NO

Length of screened/open interval: 85 (ft)

3) Is there a river, lake, pond, stream, or other obvious surface water body within the 6 month time of travel boundary? ✓ YES ___ NO (mark and identify on map).

4) Is there a stormwater and/or wastewater facility, treatment lagoon, or holding pond located within the 6 month time of travel boundary? ___ YES ___ NO (mark and identify on map).

Comments: _____

PART V: Assessment of Water Quality

1) Regional sources of risk to ground water:

Please indicate if any of the following are present within a circular area around your water source having a radius up to and including the five year ground water travel time:

Note: We need the one yr. capture zone →

	6 month	1 year	5 year	unknown
likely pesticide application	✓	✓	✓	
stormwater injection wells				✓
other injection wells				✓
abandoned ground water well				✓
landfills, dumps, disposal areas	No	No	No	
known hazardous materials clean-up site	No	No	Yes	✓
water system(s) with known quality problems				✓
population density > 1 house/acre	No	No	No	
residences commonly have septic tanks	No	No	Yes	
Wastewater treatment lagoons	No	No	No	
sites used for land application of waste	No	No	No	

Mark and identify on map any of the risks listed above which are located within the 6 month time of travel boundary? *(Please include a map of the wellhead and time of travel areas with this form. Please locate and mark any of the following.)*

If other recorded or potential sources of ground water contamination exist within the ten year time of travel circular zone around your water supply, please describe:

Underground STORAGE TANKS - See attached Figures + Table
Chemical Handlers
Lube/Oil Change Facilities
Car Repair Stations
Dry Cleaners

2) Source specific water quality records:

Please indicate the occurrence of any test results since 1986 that meet the following conditions: (Unless listed on assessment, MCLs are listed in assistance package.)

A. Nitrate: (Nitrate MCL = 10 mg/l)	YES	NO
Results greater than MCL		X
< 2 mg/liter nitrate	X	
2-5 mg/liter nitrate		X
> 5 mg/liter nitrate		X
___ Nitrate sampling records unavailable		

B. VOCs: (VOC detection level 0.5 ug/l or 0.0005 mg/l.)	YES	NO
Results greater than MCL or SAL		X
VOCs detected at least once		X
VOCs never detected	X	
___ VOC sampling records unavailable		

C. EDB/DBCP:	YES	NO
(EDB MCL = 0.05 ug/l or 0.00005 mg/l. DBCP MCL = 0.2 ug/l or 0.0002 mg/l.)		
EDB/DBCP detected below MCL at least once		
EDB/DBCP detected above MCL at least once		
EDB/DBCP never detected		

___ EDB/DBCP tests required but not yet completed

X EDB/DBCP tests not required

D. Other SOCs (Pesticides):	YES	NO
Other SOCs detected (pesticides and other synthetic organic chemicals)		

___ Other SOC tests performed but none detected

(list test methods in comments

X Other SOC tests not performed

If any SOCs in addition to EDB/DBCP were detected, please identify and date. If other SOC tests were performed, but no SOCs detected, list test methods here: _____

_____

_____

_____

E. Bacterial contamination:

	YES	NO
Any bacterial detection(s) in the past 3 years in samples taken from the source (not distribution sampling records).	___	X
Has source (in past 3 years) had a bacteriological contamination problem found in distribution samples that was attributed to the source.	___	X

___ Source sampling records for bacteria unavailable

Part VI: Geographic or Hydrologic Factors Contributing to a Non-Circular Zone of Contribution

The following questions will help identify those ground water systems which may not be accurately represented by the calculated fixed radius (CFR) method described in Part IV. For these sources, the CFR areas should be used as a preliminary delineation of the critical time of travel zones for that source. As a system develops its Wellhead Protection Plan for theses sources, a more detailed delineation method should be considered.

1) Is there evidence of obvious hydrologic boundaries within the 10 year time of travel zone of the CFR? (Does the largest circle extend over a stream, river, lake, up a steep hillside, and/or over a mountain or ridge?)

✓ YES ___ NO

Describe with references to map produced in Part IV:

ISSAQUAH CREEK
STEEP HILL (GRAVEL PIT) GRAND RIDGE AREA

2) Aquifer Material:

A) Does the drilling log, well log or other geologic/engineering reports identify that the well is located in an area where the underground conditions are identified as fractured rock and/or basalt terrain?

___ YES ✓ NO

B) Does the drilling log, well log or other geologic/engineering reports indicate that the well is located in an area where the underground conditions are primarily identified as coarse sand and gravel?

✓ YES ___ NO

3) Is the source located in an aquifer with a high horizontal flow rate? (These can include sources located on flood plains of large rivers, artesian wells with high water pressure, and/or shallow flowing wells and springs.)

__ YES ✓ NO

4) Are there other high capacity wells (agricultural, municipal and/or industrial) located within the CFRs? YES

a) Presence of ground water extraction wells removing more than approximately 500 gal/min within...

	YES	NO	unknown
< 6 month travel time	✓		
6 month–1 year travel time	✓		
1–5 year travel time	✓		
5–10 year travel time	✓		

b) Presence of ground water recharge wells (dry wells) or heavy irrigation within...

	YES	NO	unknown
< 1 year travel time			✓
1–5 year travel time			✓
5–10 year travel time			✓

Please identify or describe additional hydrologic or geographic conditions that you believe may affect the shape of the zone of contribution for this source. Where possible, reference them to locations on the map produced in Part IV.

See Lower Issaquah Valley Wellhead Protection Plan

District Wells 7 + 8 are considered together.
The District is currently applying for a Well Field designation

Suggestions and Comments

Did you attend one of the susceptibility workshops? X YES ___ NO

Did you find it useful? X YES ___ NO

Did you seek outside assistance to complete the assessment? X YES ___ NO

. . . .

This form and instruction packet are still in the process of development. Your comments, suggestions and questions will help us upgrade and improve this assessment form. If you found particular sections confusing or problematic please let us know. How could this susceptibility assessment be improved or made clearer? Did the instruction package help you find the information needed to complete the assessment? How much time did it take you to complete the form? Were you able to complete the assessment without additional/outside expertise? Do you feel the assessment was valuable as a learning experience? Any other comments or constructive criticisms you have would be appreciated.

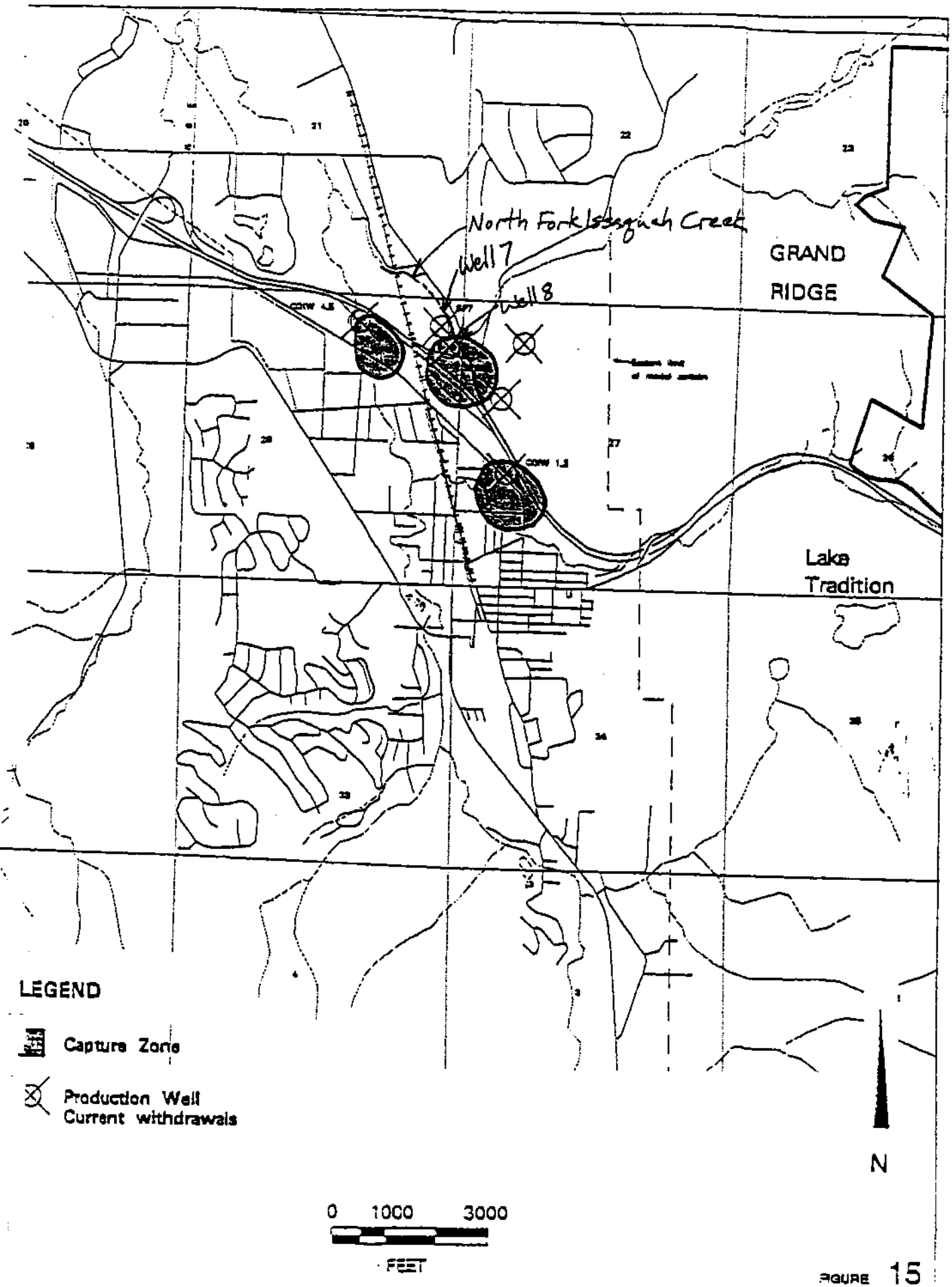

FIGURE 15

ONE YEAR CAPTURE ZONES FOR PRODUCTION WELLS

SAMMAMISH PLATEAU/WHP STUDY/WA

Golder Associates

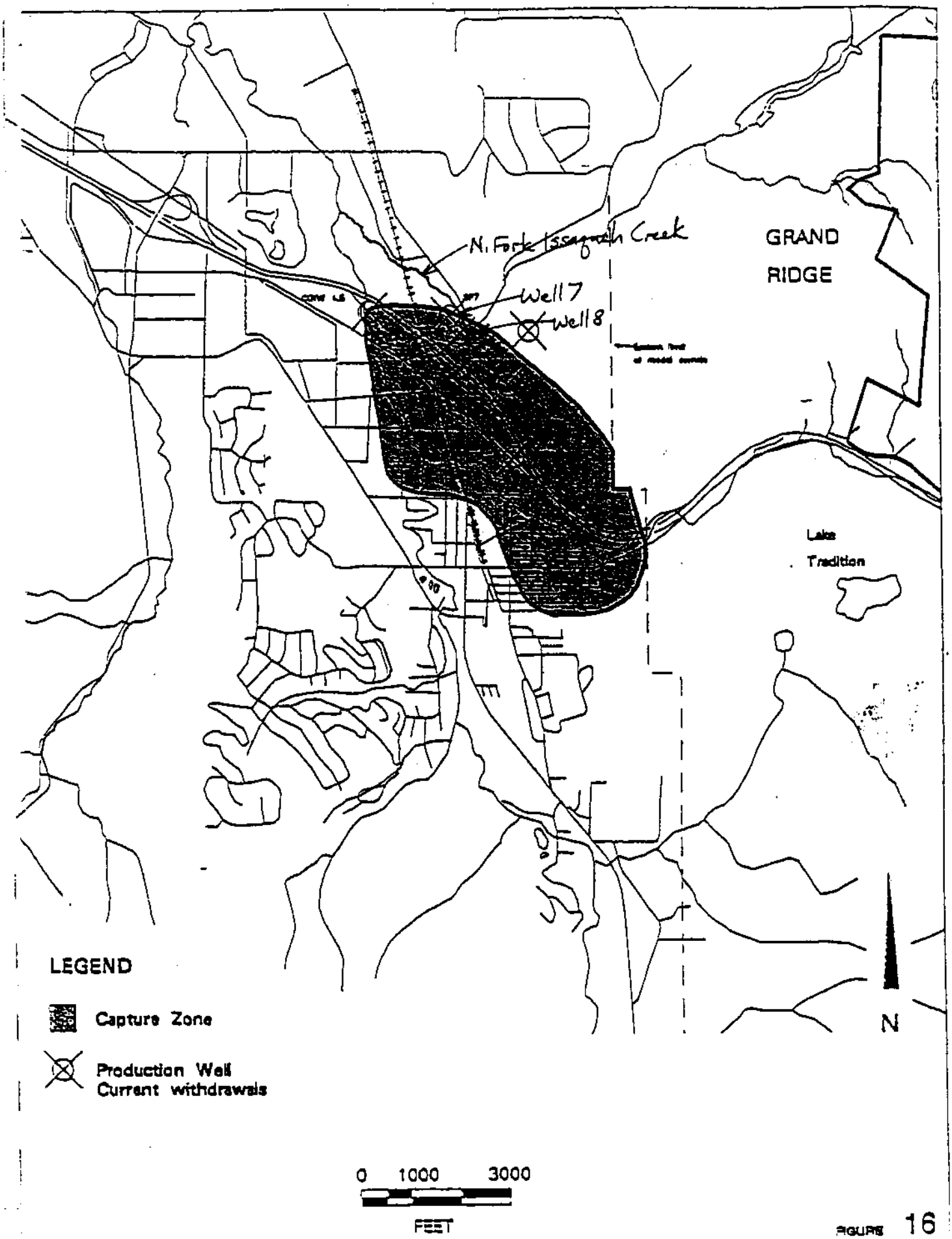

FIGURE 16

FIVE YEAR CAPTURE ZONE FOR PRODUCTION WELLS

SAMMAMISH PLATEAU/WHP STUDY/WA

Golder Associates

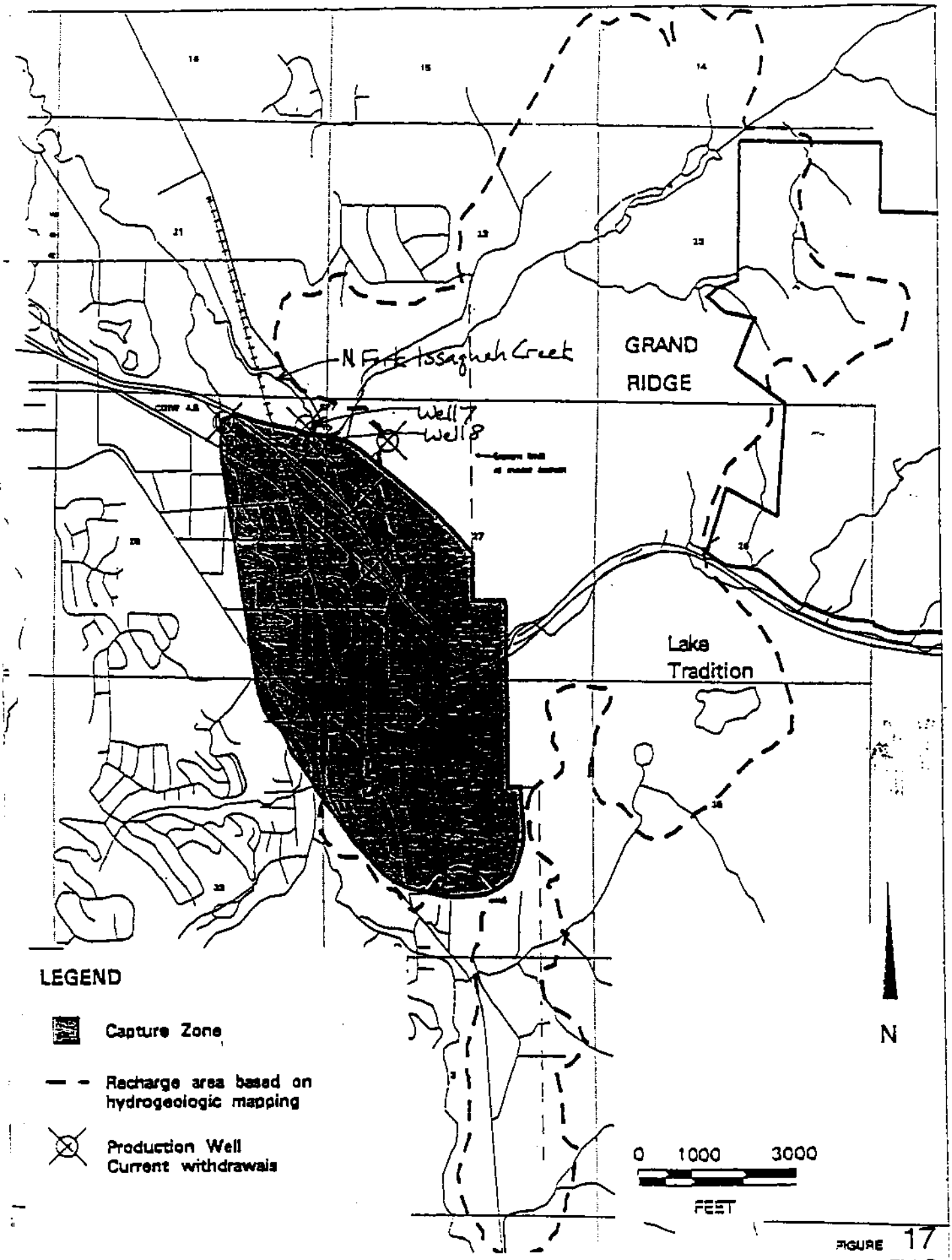

FIGURE 17

TEN YEAR CAPTURE ZONE FOR PRODUCTION WELLS

SAMMAMISH PLATEAU/WHP STUDY/WA

Golder Associates

3-1252 fgo10.aml 9/5/93

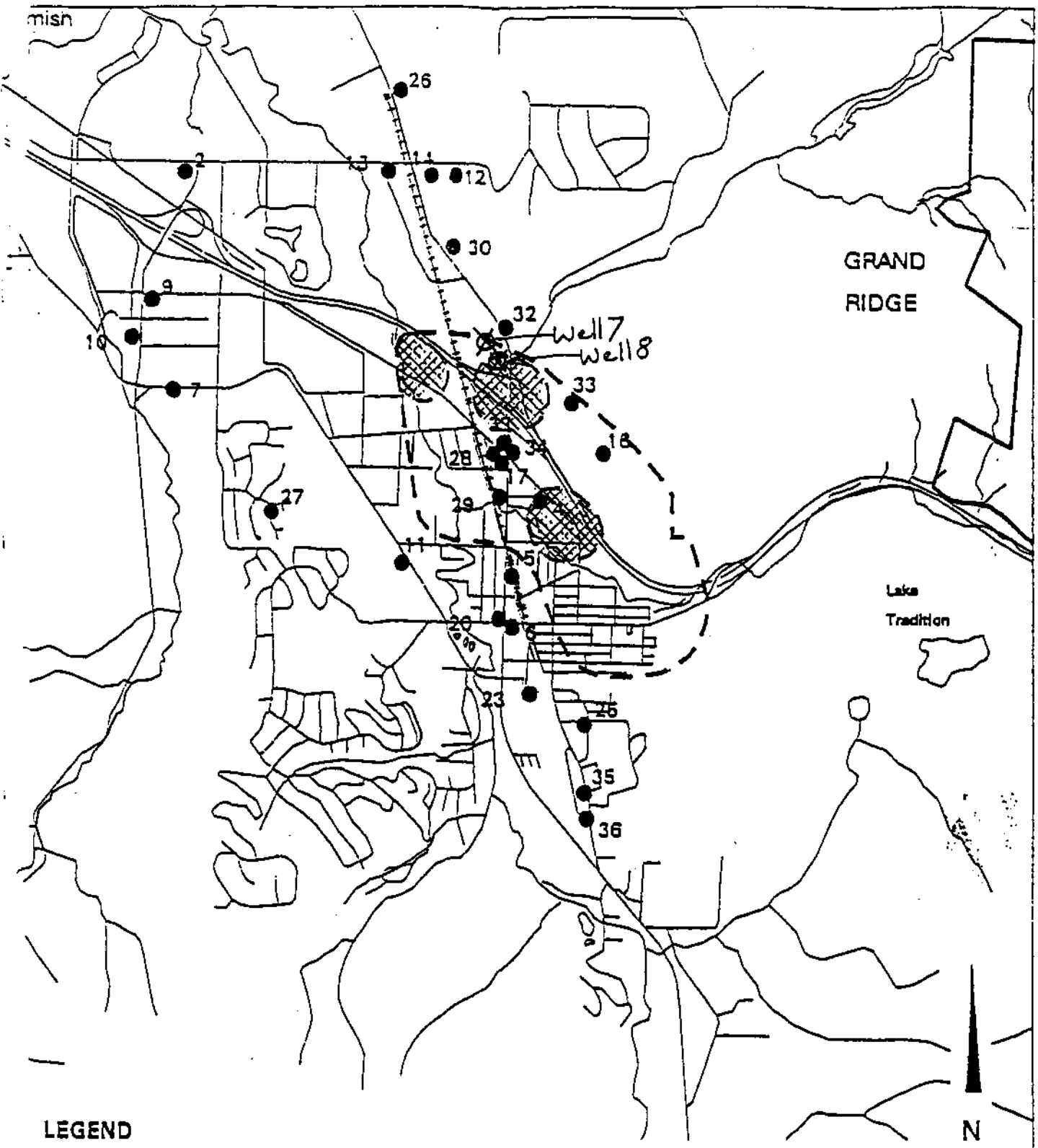

LEGEND

13 ● Underground Storage Tank (Reference number)

One year capture zones

— — Five year capture zone

Sites 1, 3, 5, 8, 18, 19, 21, 22, 24, and 31 are outside the immediate vicinity of capture zones

0 1000 3000

FEET

FIGURE 23

UNDERGROUND STORAGE TANKS IN VICINITY OF 1-YR AND 5-YR CAPTURE ZONES

SAMMAMISH PLATEAU/WHP STUDY/WA

1-1252 figure.aml 9/3/93

Golder Associates

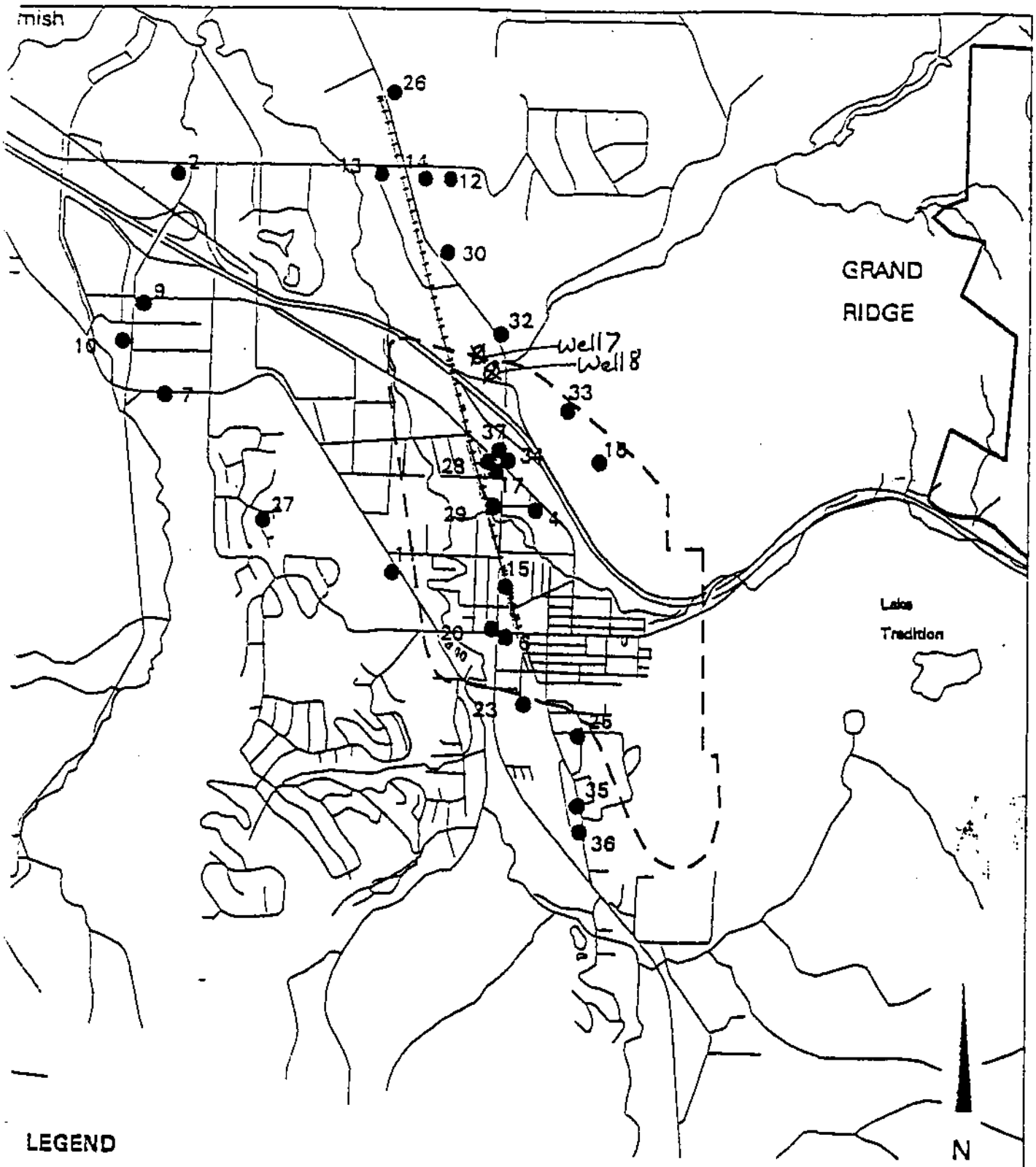

LEGEND

● 13 Underground Storage Tank (Reference number)

— — Ten year capture zone

Sites 1, 3, 5, 8, 18, 19, 21, 22, 24, and 31 are outside the immediate vicinity of capture zone

0 1000 3000

FEET

FIGURE 24

UNDERGROUND STORAGE TANKS IN VICINITY OF 10-YR CAPTURE ZONE

SAMMAMISH PLATEAU/WHP STUDY/WA

-1252 fguqic2.aml 5/16/93

Golder Associates

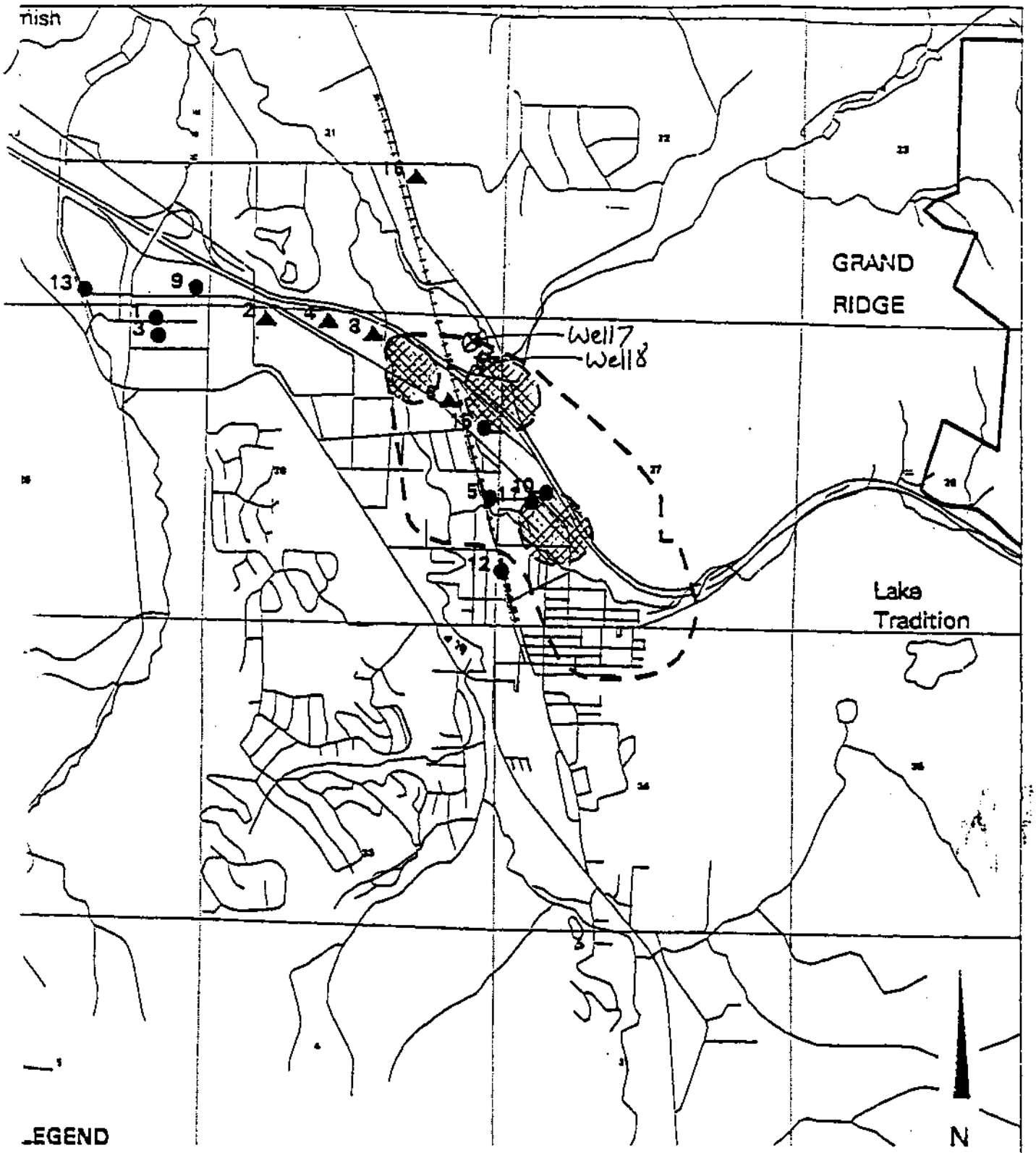

LEGEND

13 ● Chemical Handlers (Chemical handler reference number)

4 ▲ Onsite Dry Cleaners (Chemical handler reference number)

One year capture zones

— - Five year capture zone

Sites 7 and 14 are not within map range

0 1000 3000

FEET

FIGURE 26

CHEMICAL HANDLER LOCATIONS IN VICINITY OF 1-YR AND 5-YR CAPTURE ZONES

SAMMAMISH PLATEAU/WHP STUDY/WA

1252 fgsc.ami 11/11/93

Golder Associates

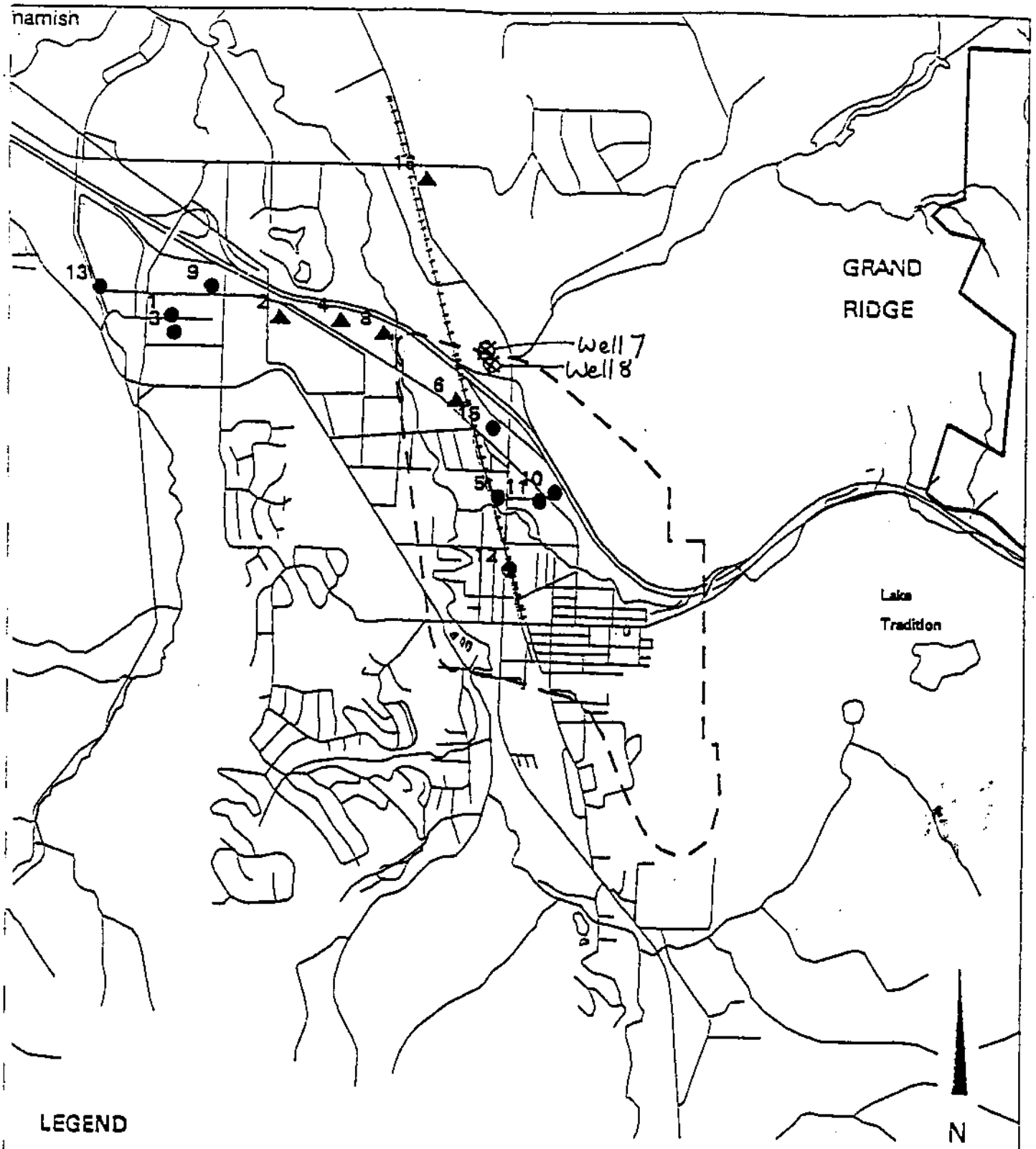

LEGEND

13 ● Chemical Handlers (Chemical handler reference number)

4 ▲ Onsite Dry Cleaners (Chemical handler reference number)

— - Ten year capture zone

Sites 7 and 14 are not within map range

0 1000 3000

FEET

FIGURE 27

CHEMICAL HANDLER LOCATIONS IN VICINITY OF 10-YEAR CAPTURE ZONE

SAMMAMISH PLATEAU/WHP STUDY/WA

13-1252 fgdo10.aml 5/18/93

Golder Associates

Sammamish Plateau Water & Sewer District

Well 7

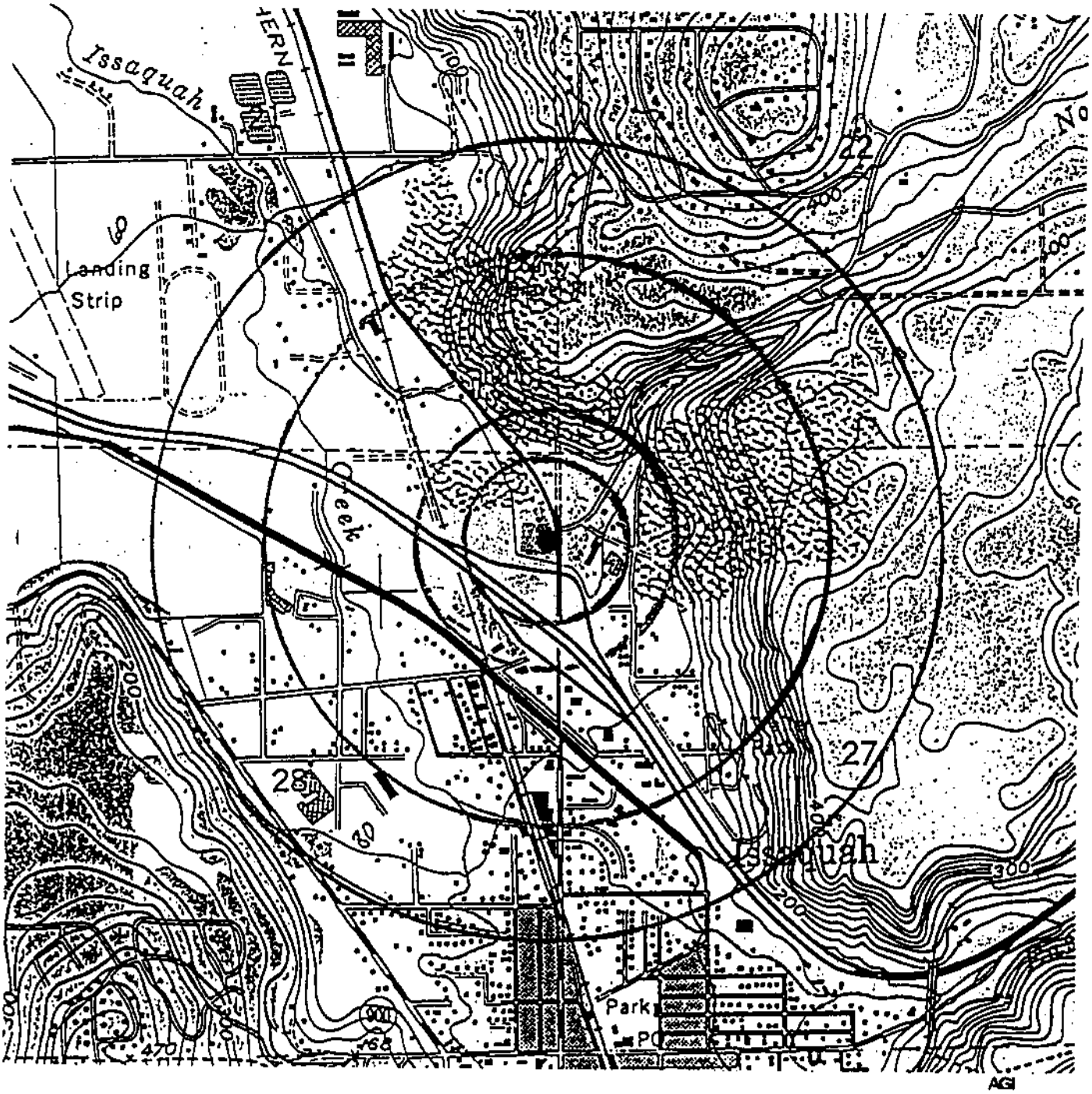

LEGEND

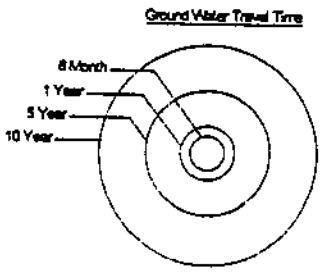

SCALE (FT)

0 1000 2000 3000 4000 5000

TABLE 15

SUMMARY UST'S AND CHEMICAL HANDLERS IN WHPA'S

	Source Type/Number	Owner	Contaminant	Quantity Onsite (gallons)	Previous Quantities	Number of Operational Tanks
1-YR WHPA - COI 1/2	UST-14	Reda Transportation	Gasoline	20,000	NA	1
	CH-10	Gilman Auto Body	Solvent	55	NA	-
	CH-11	Grange Supply	Solvent	55	NA	-
	UST-4	Grange Supply	Gasoline	70,000	NA	3
1-YR WHPA - COI 4/5	None					
1-YR WHPA - SPWSD 7/8	CH-15	Precision Tune	Waste oil	500		-
	UST-17	Chevron	Gasoline	60,000	NA	3
	UST-28	B.P.	Gasoline	82,200	NA	5
	UST-34	Arco	Gasoline	81,100	NA	5
	UST-37	Texaco	Gasoline	80,000	NA	4
5-YR WHPA	UST-33	Lakeside	Gasoline	61,100	NA	5
	UST-16	Closed	Gasoline	0	3,300	0
	UST-17	Chevron	Gasoline	60,000	NA	3
	UST-28	B.P.	Gasoline	82,200	NA	5
	UST-34	Arco	Gasoline	81,000	122,200	5
	UST-37	Texaco	Gasoline	80,000	NA	4
	UST-29	Darigold	Gasoline	60,000	60,000+	3
	CH-6	Dirks Dry Clean	Solvent	55	NA	-
	CH-5	Darigold	Diesel	NA	NA	-
	CH-12	Lakeside	Waste Oil/Solvent	5000/50	NA	-
10-YR WHPA	UST-15	Issaquah Feed	Gasoline	0	4,400	0
	UST-20	Mobil (closed)	Gasoline	30,000[a]	51,100	1
	UST-6	Texaco	Gasoline	50,000	NA	3
	UST-23	Issaquah Middle School	Gasoline	30,000	31,100	2
	UST-25	Clark Elementary	Gasoline	1,100	2,200	1
	UST-35	Bus Garage	Gasoline	0	11,100	1
	UST-36	Transportation	Gasoline	60,000	NA	1

[a] status unknown
[b] closed in-place
NA Not available

File Original and First Copy with Department of Ecology
Second Copy — Owner's Copy
Third Copy — Driller's Copy

WATER WELL REPORT

STATE OF WASHINGTON

Application No. .....

Permit No. .....

(1) OWNER: Name KING COUNTY WATER DISTRICT 82 Address 1510 228th SE

(2) LOCATION OF WELL: County KING — NE ¼ NE ¼ Sec. 28 T. 24 N., R. 6 W.M.

Bearing and distance from section or subdivision corner

(3) PROPOSED USE: Domestic ☐ Industrial ☐ Municipal ☒ Irrigation ☐ Test Well ☐ Other ☐

(4) TYPE OF WORK: Owner's number of well (if more than one) 7

New well ☒ Deepened ☐ Reconditioned ☐

Method: Dug ☐ Cable ☒ Rotary ☐ Bored ☐ Driven ☐ Jetted ☐

(5) DIMENSIONS: Diameter of well 16 inches.

Drilled 151 ft. Depth of completed well 151 ft.

(6) CONSTRUCTION DETAILS:

Casing installed: 16 " Diam. from 0 ft. to 82.6 ft.

Threaded ☐ " Diam. from ft. to ft.

Welded ☒ " Diam. from ft. to ft.

Perforations: Yes ☐ No ☒

Type of perforator used

SIZE of perforations in. by in.

perforations from ft. to ft.

perforations from ft. to ft.

perforations from ft. to ft.

Screens: Yes ☒ No ☐

Manufacturer's Name UOP a JOHNSON

Type 304 SS Model No.

Diam. 14 PS Slot size .100 from 82.6 ft. to 103 ft.

Diam. Slot size .100 from 103 ft. to 123.6 ft.

Gravel packed: Yes ☐ No ☒ Size of gravel: .060 136.7-146.9

Gravel placed from ft. to ft.

Surface seal: Yes ☒ No ☐ To what depth? 80 ft.

Material used in seal

Did any strata contain unusable water? Yes ☐ No ☒

Type of water? Depth of strata

Method of sealing strata off

(7) PUMP: Manufacturer's Name

Type: H.P.

(8) WATER LEVELS: Land-surface elevation above mean sea level .... ft.

Static level 6.17 ft. below top of well Date 3/17/84

Artesian pressure lbs. per square inch Date

Artesian water is controlled by (Cap, valve, etc.)

(9) WELL TESTS: Drawdown is amount water level is lowered below static level

Was a pump test made? Yes ☒ No ☐ If yes, by whom? Driller

Yield: 1952 gal./min. with 37.9 ft. drawdown after 24 hrs.

" " " "

" " " "

Recovery data (time taken as zero when pump turned off) (water level measured from well top to water level)

Time	Water Level	Time	Water Level	Time	Water Level

Date of test 3/17/84

Bailer test gal./min. with ft. drawdown after hrs.

Artesian flow g.p.m. Date

Temperature of water 56.3 Was a chemical analysis made? Yes ☒ No ☐

(10) WELL LOG:

Formation: Describe by color, character, size of material and structure, and show thickness of aquifers and the kind and nature of the material in each stratum penetrated, with at least one entry for each change of formation.

MATERIAL	FROM	TO
Fill, wood, clay, gravel, silt	0	6
Gravel, sand, clay, silt	6	17
Gravel, brown sand	17	20
Brown clay, sand	20	24
Brown sand, gravel, clay, silt	24	65
Brown sand, clay, silt	65	69
Brown sand, gravel, clay, silt	69	85
Brown sand, gravel, clay, silt, WATER BEARING	85	90
Gravel, cobbles, brown sand clay, silt	90	130
Brown sand, gravel	130	133
Brown sand, gravel, layers clay	133	136
Sand, gravel, clay, silt, WATER BEARING	136	148
Brown clay, sand, some gravel	148	151

Work started Feb. 28 19 84. Completed Mar. 18 19 84

WELL DRILLER'S STATEMENT:

This well was drilled under my jurisdiction and this report is true to the best of my knowledge and belief.

NAME Hokkaido Drilling & Dev. Corp. (Person, firm, or corporation) (Type or print)

Address P.O. Box 100 Graham, WA

[Signed] (Well Driller)

License No. 0492 Date April 10 19 84

(USE ADDITIONAL SHEETS IF NECESSARY)

ECY 050-1-75

SPW&SD WELLS 7 & 8
PUMPING WELLS

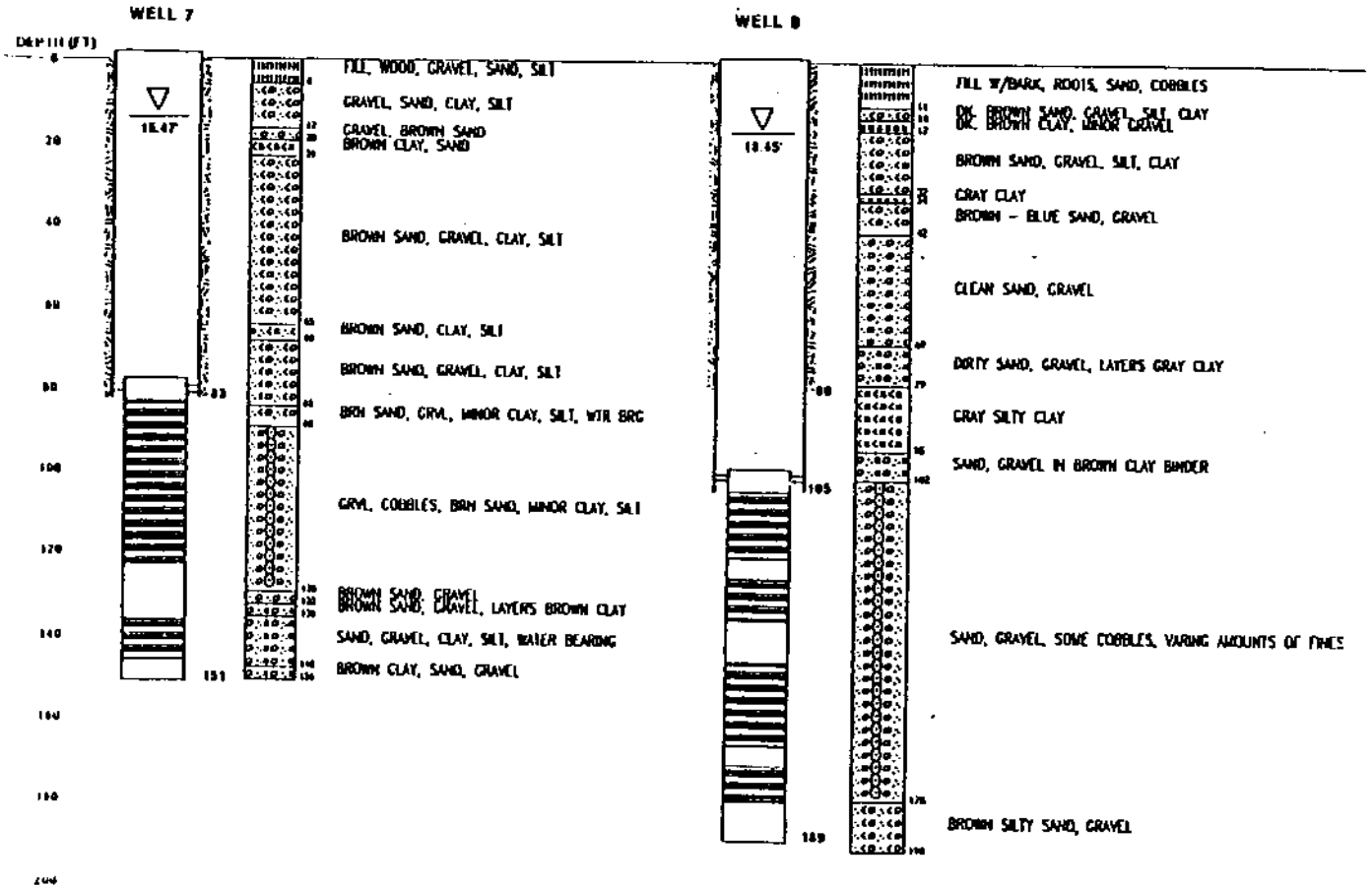

NOTE:

- WELL 8 IS 350 FEET SOUTH OF WELL 7
- WELLS 7 & 8 ARE 16-INCH DIAMETER WITH 14-INCH SCREEN ASSEMBLIES
- ▽ NON-PUMPING WATER LEVELS (9/16/90)
- GROUND SURFACE ELEVATION APPROX. 72 FEE
- NOT TO SCALE

FIGURE 1-4

CARR/ASSOCIATES 9265

Health
Environmental Health

WATER FACILITIES INVENTORY (WFI)

Read instructions on back before completing

DATE RECEIVED FEB 1 1994
Ans'd.....
DATE UPDATED 01/11/94

1. SYSTEM ID NO.	2. COUNTY	GROUP	TYPE	WRIA
00002	17	A	COMM	9

3. SYSTEM NAME: SAMMAMISH PLATEAU WATER & SEWER

STREET ADDRESS: 1510 228TH AVE SE.

P.O. BOX (IF APPLICABLE):

CITY: ISSAQUAH STATE: WA ZIP CODE: 98027

4. OWNER'S NAME (LAST, FIRST): SAMMAMISH PLATEAU WATER & OWNER NO.: 3007

STREET ADDRESS: 1510 228TH AVE. S.E.

P.O. BOX (IF APPLICABLE):

CITY: ISSAQUAH STATE: WA ZIP CODE: 98027

5. SYSTEM CONTACT PERSON: DONALD E. LITTLE - MANAGER TITLE:

DAY TELEPHONE: 206-392-6256 EVENING TELEPHONE:

6. OWNERSHIP (CHECK ONE ONLY)

- [ ] PRIVATE: NON-PROFIT
- [ ] PRIVATE: FOR-PROFIT
- [x] LOCAL GOVERNMENT (COUNTY/CITY/PUD/WATER DISTRICT)
- [ ] STATE
- [ ] FEDERAL

7. PREDOMINANT CHARACTERISTIC (CHECK ONE ONLY)

- [x] RESIDENTIAL
- [ ] RECREATIONAL
- [ ] BUSINESS/INDUSTRIAL/AGRICULTURAL/COMMERCIAL
- [ ] LODGING/FOOD SERVICE
- [ ] SCHOOL/DAY CARE
- [ ] OTHER (CHURCHES, ETC.)

WFI COMPLETED BY: TITLE:

DAY TELEPHONE: DATE:

8. SUBMITTED FOR: [ ] NEW SYSTEM [ ] NO CHANGE [ ] REACTIVATE [ ] SYSTEM NAME CHANGE* [ ] UPDATE [ ] DELETE

*OLD SYSTEM NAME - ENTER ONLY IF CHANGING WITH THIS WFI

SYSTEMS SERVING ANY RESIDENTS (PEOPLE LIVING IN A DWELLING SERVED BY THE SYSTEM), COMPLETE THIS SECTION

9. NUMBER ACTIVE RESIDENTIAL CONNECTIONS: 8844

10. NUMBER ACTIVE RESIDENTIAL POPULATION: 25,647

SYSTEMS SERVING ANY NON-RESIDENTS (I.E., TRAVELERS, EMPLOYEES, STUDENTS, ETC.), COMPLETE THIS SECTION

11. NUMBER NON-RESIDENTIAL CONNECTIONS:

12. ENTER AVERAGE DAILY NON-RESIDENTIAL POPULATION SERVED FOR EACH MONTH. MAKE ENTRY FOR EACH MONTH

JAN.		JULY	
	MAY		NOV.
MAR.		SEP.	

13. DOES THE SYSTEM SERVE AT LEAST 25 OF THE SAME NON-RESIDENTS FOR 4 OR MORE DAYS PER WEEK FOR AT LEAST 180 DAYS PER YEAR? [ ] YES [x] NO

14. TOTAL NUMBER CONNECTIONS METERED: 8,844

15. DISTRIBUTION RESERVOIR(S) TOTAL CAPACITY: 12,850,000 GALLONS

16. DOH SOURCE NUMBER	17. SOURCE NAME (LIST UTILITY'S NAME FOR SOURCE. IF SOURCE IS PURCHASED OR INTERTIED, LIST SELLER'S ID# AND NAME USING FOLLOWING FORMAT: XXXXXX/NAME EXAMPLE: 77060Y/SEATTLE)	18. SOURCE CATEGORY: WELL	WELL (RB4)	SURFACE	SPRING	RAINEY/INF. GAL.	INTERTIE	PURCHASE-TREATED	PURCHASE-UNTREATED	19. USE: PERMANENT	SEASONAL	EMERGENCY	20. SOURCE METERED	21. TREATMENT: NONE	CHLORINATION	FILTRATION	FLUORIDATION	OTHER	22. WELL DEPTH (FEET)	23. SOURCE CAPACITY (GPM)	24. SOURCE LOCATION: 1/4, 1/4 SEC.	SEC. NO.	TWP	RNG.	SWTR EVALUATION VOC EVALUATION
001	WELL 1	X								X				X					154	500	SW/NE	10	24N	06E	
002	WELL 2	X									X			X					132	360	NW/SE	11	24N	06E	
003	WELL # 5	X								X					X				716	450	NW/SW	34	25N	06E	
004	WELL # 4	X								X					X				714	625	SW/NW	34	25N	06E	
005	WELL 6	X									X				X				365	500	NE/SE	32	25N	06E	
006	WELL #7	X									X			X					150	2,000	SE/SE	21	24N	06E	
007	WELL #8	X								X				X					150	3,500	SE/SE	21	24N	06E	

MINIMUM REQUIRED BACTERIOLOGICAL SAMPLING SCHEDULE

25.	26.	JAN	FEB	MAR	APR	MAY	JUN	JUL	AUG	SEP	OCT	NOV	DEC
		30	30	30	30	30	30	30	30	30	30	30	30

NO. APPROVED SERVICES (PER PLANS): 0 DATE OF LAST SANITARY SURVEY: 0000 BY DOH [ ] LHD [ ]

SYSTEM IN CRITICAL WATER SUPPLY SERVICE AREA? [x] YES [ ] NO GW MGMT AREA? [ ] YES [ ] NO FOR LHD USE ONLY

EFFECTIVE DATE RETRO. CHANGES: SIGNATURE OF DOH REVIEWER: DATE:

WATER SYSTEM

1989

SAMMAMISH PLATEAU WATER & SEWER DISTRICT

WATER SAMPLE INFORMATION FOR INORGANIC CHEMICAL ANALYSES - 1989

ITEM	WELL 1 8/4/89	WELL 2 4/10/89	WELL 4 4/10/89	WELL 5 4/10/89	WELL 6 7/17/89	WELL 7 7/17/89	WELL 8 4/10/89	*MCL
pH	7.06	7.23	8.22	8.32	7.46	7.48	*7.05	----
Arsenic	*0.010	*0.010	*0.010	*0.010	*0.010	*0.010	*0.010	0.05
Barium	*0.25	*0.25	*0.25	*0.25	*0.25	*0.25	*0.25	1.0
Cadmium	*0.002	*0.002	*0.002	*0.002	*0.002	*0.002	*0.002	0.01
Chromium	*0.010	*0.010	*0.010	*0.010	*0.010	*0.010	*0.010	0.005
Iron	*0.05	*0.05	*0.05	*0.05	*0.05	0.05	*0.05	0.3
Lead	*0.010	*0.010	*0.010	*0.010	*0.010	*0.010	*0.010	0.05
Manganese	*0.010	*0.010	0.041	0.042	0.026	*0.010	*0.010	0.05
Mercury	*0.0010	*0.0010	*0.0010	*0.0010	*0.0010	*0.0010	*0.0010	0.002
Selenium	*0.005	*0.005	*0.005	*0.005	*0.005	*0.005	*0.005	0.01
Silver	*0.010	*0.010	*0.010	*0.010	*0.010	*0.010	0.010	0.05
Sodium	*10	*10	*10	*10	*10	*10	*10	
Hardness	60	87	63	61	48	74	81	
Conductivity	155	220	160	150	120	200	200	700
Turbidity	*0.1	*0.4	*0.2	*0.1	*0.1	0.2	*0.1	1.0
Color	*5.0	*5.0	*5.0	*5.0	*5.0	15.0	*5.0	15.0
Fluoride	*0.2	*0.2	*0.2	*0.2	*0.2	*0.2	*0.2	2.0
Nitrate	1.1	*0.7	*0.2	*0.2	*0.2	1.6	*0.2	10.0
Chloride	*10	*10	*10	*10	*10	*10	*10	250
Sulfate								250

PARTS PER MILLION

*MCL Is the Maximum Contaminant Level Allowed

*Less Than

(Note: Well 7 was re-tested for Iron & Turbidity and those numbers are listed above.)

AnTest/Lab

SAMMAMISH PLATEAU WATER AND SEWER DISTRICT
WATER SAMPLE INFORMATION FOR INORGANIC CHEMICAL ANALYSIS - 1990

ITEM	WELL 1 9/7/90	WELL 2 4/10/89	WELL 4 9/7/90	WELL 5 9/7/90	WELL 6 9/7/90	WELL 7 9/7/90	WELL 8 9/7/90	** MCL
pH	6.74	7.23	7.26	7.74	7.88	7.29	7.12	
Arsenic	<0.010	<0.010	<0.010	<0.010	<0.010	<0.010	<0.010	0.05
Barium	<0.25	<0.25	<0.25	<0.25	<0.25	<0.25	<0.25	1.00
Cadmium	<0.002	<0.002	<0.002	<0.002	<0.002	<0.002	<0.002	0.01
Chromium	<0.010	<0.010	<0.010	<0.010	<0.010	<0.010	<0.010	0.05
Iron	<0.05	<0.05	<0.05	<0.05	<0.05	<0.05	<0.05	0.3
Lead	<0.005	<0.0100	<0.005	<0.005	<0.005	<0.005	<0.005	0.05
Manganese	<0.010	<0.0100	<0.039	<0.037	<0.028	<0.010	<0.010	0.05
Mercury	<0.0010	<0.0010	<0.0010	<0.0010	<0.0010	<0.0010	<0.0010	0.002
Selenium	<0.05	<0.005	<0.005	<0.005	<0.005	<0.005	<0.005	0.01
Silver	<0.010	<0.0100	<0.010	<0.010	<0.010	<0.010	<0.010	0.05
Sodium	<10	<10	<10	<10	<10	<10	<11	
Hardness	79	87	58	58	51	72	72	
Conductivity	85	220	150	154	125	189	188	700
Turbidity	<0.2	<0.4000	<0.1	<0.1	<0.2	<0.1	<0.9	1.0
Color	<5.0	<5.0	<10.0	<10.0	<5.0	<5.0	<10.	15
Fluoride	<0.2	<0.2000	<0.2	<0.2	<0.2	<0.2	<0.2	2.0
Nitrate	<1.3	<0.7000	<0.2	<0.2	<0.2	<0.2	<1.3	10.0
Chloride	<10	<10	<10	<10	<10	<10	<10	250

PARTS PER MILLION

< Less than Detectable Limits

** Maximum Contaminant Level

SAMMAMISH PLATEAU WATER AND SEWER DISTRICT
WATER SAMPLE INFORMATION FOR INORGANIC CHEMICAL ANALYSIS - 1991

ITEM	WELL 1 7/12/91	WELL 2 7/12/91	WELL 4 7/12/91	WELL 5 7/12/91	WELL 6 7/12/91	WELL 7 7/12/91	WELL 8 7/12/91	** MCL
pH	6.6	6.4	7.3	6.7	6.7	7.1	6.8	
Arsenic	<0.010	<0.010	<0.010	<0.010	<0.010	<0.010	<0.010	0.05
Barium	<0.25	<0.25	<0.25	<0.25	<0.25	<0.25	<0.25	1.00
Cadmium	<0.002	<0.002	<0.002	<0.002	<0.002	<0.002	<0.002	0.01
Chromium	<0.010	<0.010	<0.010	<0.010	<0.010	<0.010	<0.010	0.05
Iron	<0.05	<0.05	<0.05	<0.05	<0.05	<0.05	<0.05	0.3
Lead	<0.005	<0.005	<0.005	<0.005	<0.005	<0.005	<0.005	0.05
Manganese	<0.010	<0.010	<0.018	<0.026	<0.023	<0.010	<0.010	0.05
Mercury	<0.0010	<0.010	<0.0010	<0.0010	<0.0010	<0.0010	<0.0010	0.002
Selenium	<0.005	<0.005	<0.005	<0.005	<0.005	<0.005	<0.005	0.01
Silver	<0.010	<0.010	<0.010	<0.010	<0.010	<0.010	<0.010	0.05
Sodium	7.	6.	9.	8	5	10	12	
Hardness	61	66	52	51	43	61	75	
Conductivity	180	270	120	130	120	190	210	700
Turbidity	0.2	0.6	.4	<0.3	.3	.4	0.3	1.0
Color	<5.0	<5.0	<5.0	<5.0	<5.0	<5.0	<5.	15
Fluoride	<0.2	<0.2	<0.2	<0.2	<0.2	<0.2	<0.2	
Nitrate	1.2	<1.9	1.8	<0.2	<0.2	<0.2	1.3	
Chloride	<10	<10	<10	<10	21	24	<10	

SAMMAMISH PLATEAU WATER AND SEWER DISTRICT
WATER SAMPLE INFORMATION FOR INORGANIC CHEMICAL ANALYSIS - 1992

ITEM	WELL 1 2/14/92	WELL 2 2/14/92	WELL 4 2/14/92	WELL 5 2/14/92	WELL 6 2/14/92	WELL 7 2/14/92	WELL 8 7/12/91	** MCL
pH	7.0	7.3	7.93	8.4	8.4	7.7	6.8	
Arsenic	<0.010	<0.01	<0.01	<0.01	<0.01	<0.01	<0.010	.05
Barium	<0.1	<0.1	<0.1	<0.1	<0.1	<0.1	<0.25	1.00
Cadmium	<0.002	<0.002	<0.002	<0.002	<0.002	<0.002	<0.002	0.01
Chromium	<0.05	<0.05	<0.05	<0.05	<0.05	<0.05	<0.010	0.05
Iron	<0.05	<0.05	<0.05	<0.05	0.37	<0.05	<0.05	0.3
Lead	<0.002	<0.002	<0.0025	<0.002	<0.002	<0.002	<0.005	0.05
Manganese	<0.01	<0.01	0.043	<0.041	0.038	<0.01	<0.010	0.05
Mercury	<0.0002	<0.0002	<0.0002	<0.0002	<0.0002	<0.0002	<0.0010	0.002
Selenium	<0.005	<0.005	<0.005	<0.005	<0.005	<0.005	<0.005	0.01
Silver	<0.01	<0.01	<0.01	<0.01	<0.01	<0.01	<0.010	0.05
Sodium	9.5	6.1	8.7	8.4	4.8	10	12	
Hardness	85.	75	62	62	56	79	75	
Conductivity	180.	150	140	140	120	170	210	700
Turbidity	0.46	0.42	.33	0.32	.90	.32	0.3	1.0
Color	<5.0	<5.0	<5.0	<5.0	<5.0	<5.0	<5.	15
Fluoride	<0.5	<0.5	<0.5	<0.5	<0.5	<0.5	<0.2	2
Nitrate	1.0	<1.8	<1.0	<1.0	<1.0	<1.0	1.3	10
Chloride	<20.	<20	<20	<20	<20	<20	<10	250
Sulfate	10.	<10.	<10.	<10	<10	11		250
Copper	<0.02	<0.02	<0.02	<0.02	<0.02	<0.02		1.0
Zinc	<0.05	<0.05	<0.05	<0.05	<0.05	<0.05		5.0
Aluminum	<5.0	<5.0	<5.0	<5.0	<5.0	<5.0		
Calcium	19.	18.	18	18	16	20.		

SAMMAMISH PLATEAU WATER AND SEWER DISTRICT
WATER SAMPLE INFORMATION FOR INORGANIC CHEMICAL ANALYSIS - 1993

ITEM	WELL 1	WELL 2	WELL 4	WELL 5	WELL 6	WELL 7	WELL 8	WELL 9	** MCL
	3-2-93	3-2-93	3-2-93	3-2-93	3-2-93	3-2-93	3-2-93	3-2-93	
Arsenic	< 0.01	< 0.01	< 0.01	< 0.01	< 0.01	< 0.01	< 0.01	< 0.01	0.05
Barium	< 0.1	< 0.1	< 0.1	< 0.1	< 0.1	< 0.1	< 0.1	< 0.1	1
Cadmium	< 0.002	< 0.002	< 0.002	< 0.002	< 0.002	< 0.002	< 0.002	< 0.002	0.01
Chromium	< 0.05	< 0.05	< 0.05	< 0.05	< 0.05	< 0.05	< 0.05	< 0.05	0.05
Copper	< 0.02	< 0.02	< 0.02	< 0.02	< 0.02	< 0.02	< 0.02	< 0.02	1.3
Iron	< 0.05	< 0.05	< 0.05	< 0.05	< 0.05	< 0.05	< 0.05	< 0.17	0.3
Lead	< 0.002	< 0.002	< 0.002	< 0.002	< 0.002	< 0.002	< 0.002	< 0.002	0.05
Manganese	< 0.01	< 0.01	< 0.043	< 0.041	< 0.092	< 0.01	< 0.01	< 0.01	0.05
Mercury	< 0.0002	< 0.0002	< 0.0002	< 0.0002	< 0.0002	< 0.0002	< 0.0002	< 0.0002	0.002
Selenium	< 0.005	< 0.005	< 0.005	< 0.005	< 0.005	< 0.005	< 0.005	< 0.005	0.01
Silver	< 0.01	< 0.01	< 0.01	< 0.01	< 0.01	< 0.01	< 0.01	< 0.01	0.05
Sodium	9.1	9.3	9.0	7.7	8.4	9.5	10.	8.5	
Zinc	< 0.05	< 0.05	< 0.05	< 0.05	< 0.05	< 0.05	< 0.05	< 0.05	5
Hardness	78.	80	65	65	93	79	75	68	
Conductivity	190	150	160	150	210	190	190	160	700
Turbidity	0.10	0.49	0.17	0.15	0.1	0.1	0.14	0.43	1
Color	5.	5.	5.	5.	5.	5.	5.	5.	15
Chloride	< 20	< 20	< 20	< 20	< 20	< 20	< 20	< 20	250
Fluoride	< 0.5	< 0.5	< 0.5	< 0.5	< 0.5	< 0.5	< 0.5	< 0.5	2
Nitrate	< 1.0	< 1.0	< 1.0	< 1.0	< 1.0	< 1.0	< 1.1	< 1.0	10
Sulfate	< 10	< 10	< 10	< 13	< 10	< 10	< 10	< 10	250

LEGEND

< Less Than Detectable Limits

** Maximum Contaminant Level

GROUND WATER CONTAMINATION
Susceptibility Assessment Survey Form

SAMMAMISH PLATEAU WATER & SEWER DISTRICT
1510 228th Avenue S.E.
Issaquah, Washington 98027

WELL NO. 8

GROUND WATER CONTAMINATION
Susceptibility Assessment Survey Form

TABLE OF CONTENTS

- Susceptibility Assessment Survey Form
- Sammamish Plateau Well 8 WHPA Capture Zones
- Well Log
- Water Facilities Inventory Form
- Inorganic Chemical Analysis 1989 - 1993

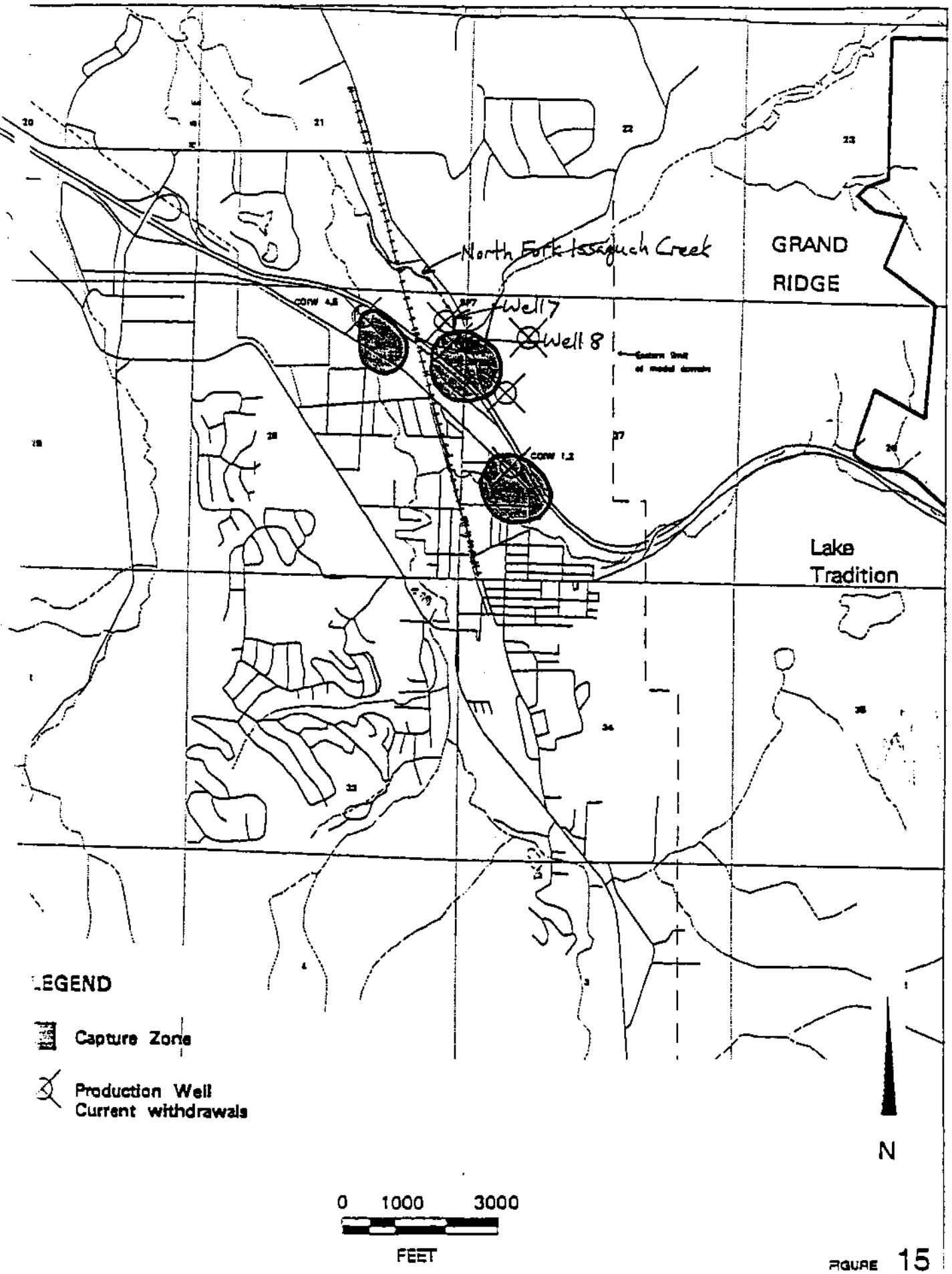

FIGURE 15

ONE YEAR CAPTURE ZONES FOR PRODUCTION WELLS

SAMMAMISH PLATEAU/WHP STUDY/WA

32 fgp1.aml 4/5/93

Golder Associates

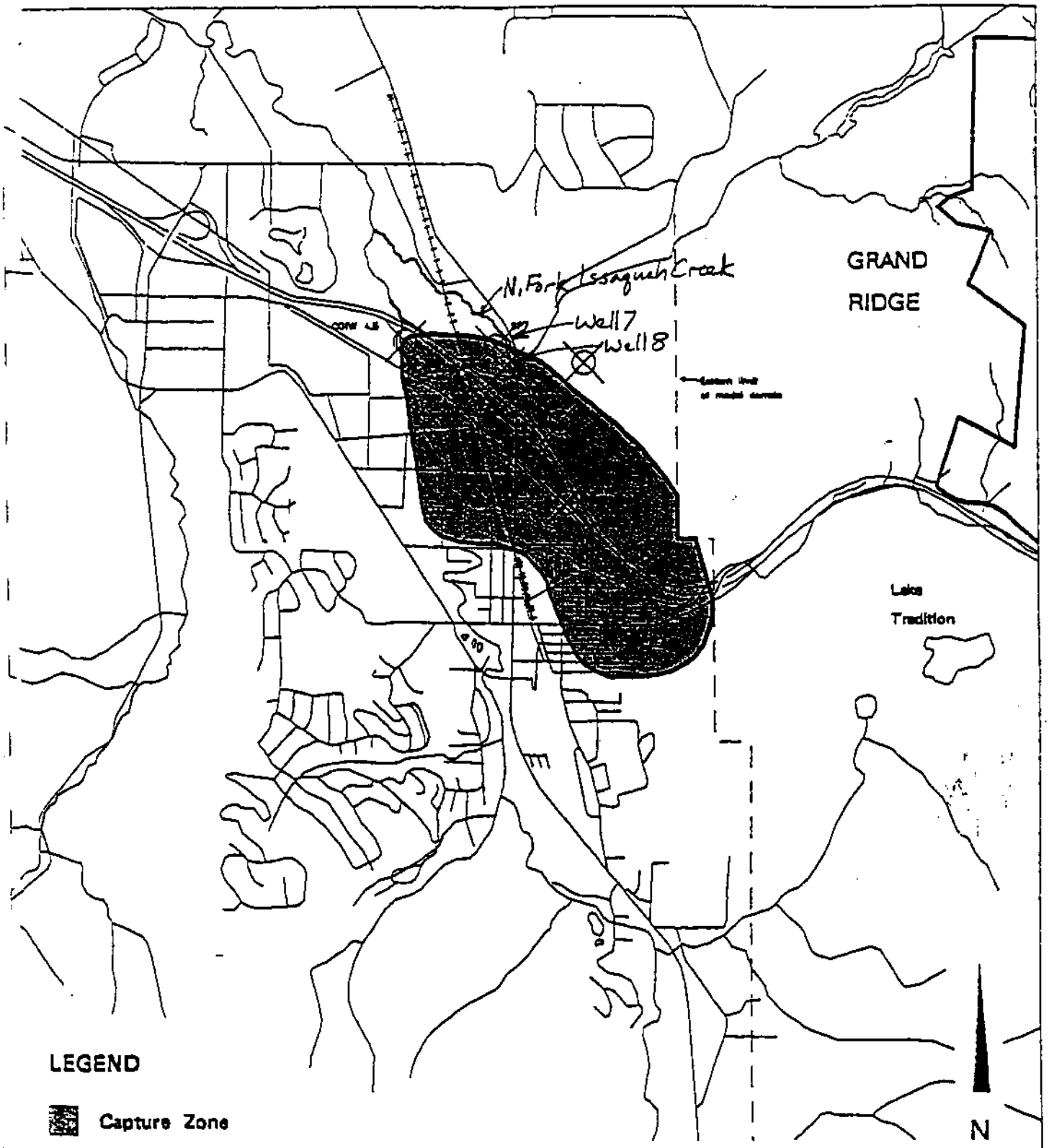

LEGEND

Capture Zone

Production Well
Current withdrawals

0 1000 3000

FEET

FIGURE 16

FIVE YEAR CAPTURE ZONE FOR PRODUCTION WELLS

SAMMAMISH PLATEAU/WHP STUDY/WA

Golder Associates

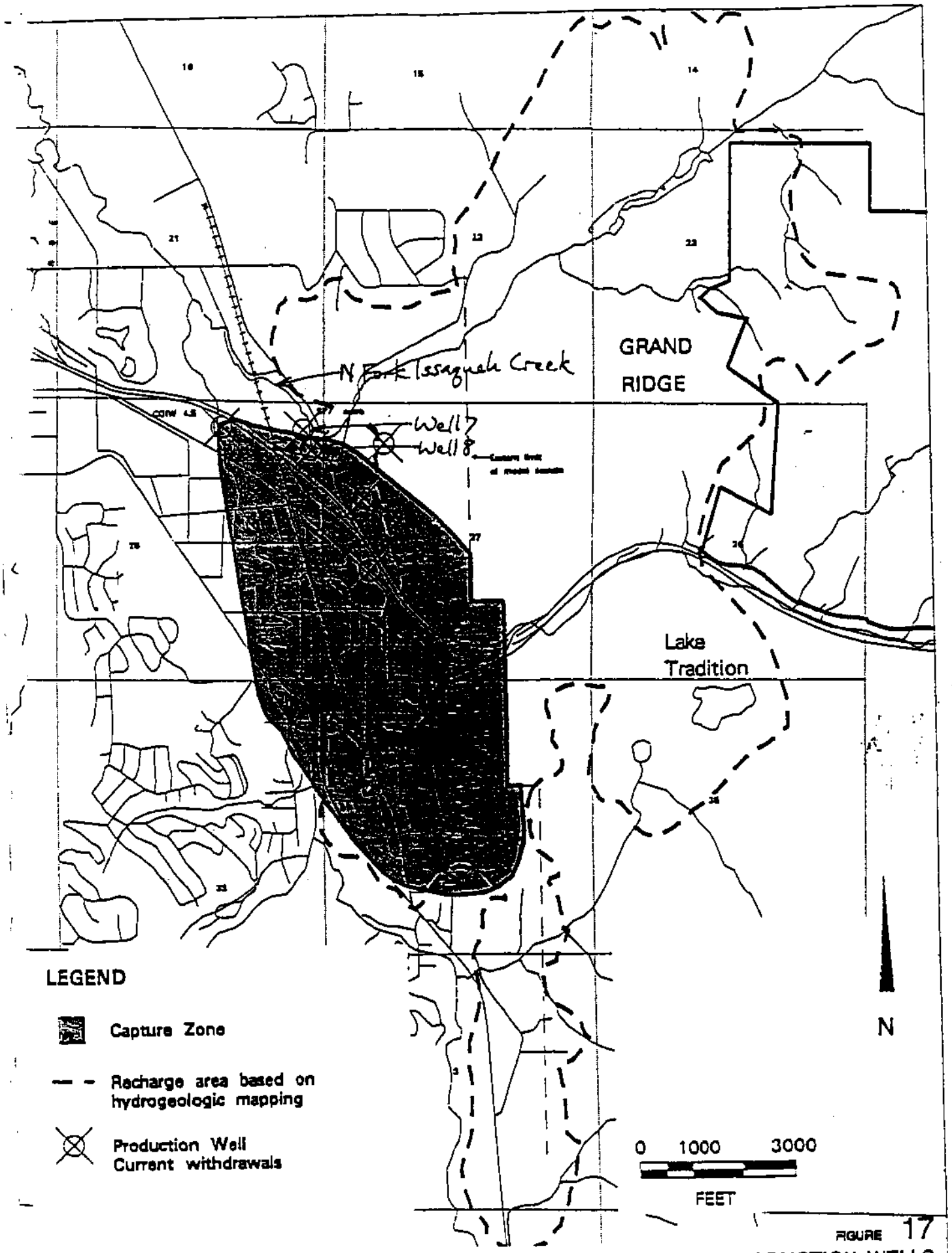

FIGURE 17

TEN YEAR CAPTURE ZONE FOR PRODUCTION WELLS

SAMMAMISH PLATEAU/WHP STUDY/WA

Golder Associates

013-1252 tpc10.aml 9/6/93

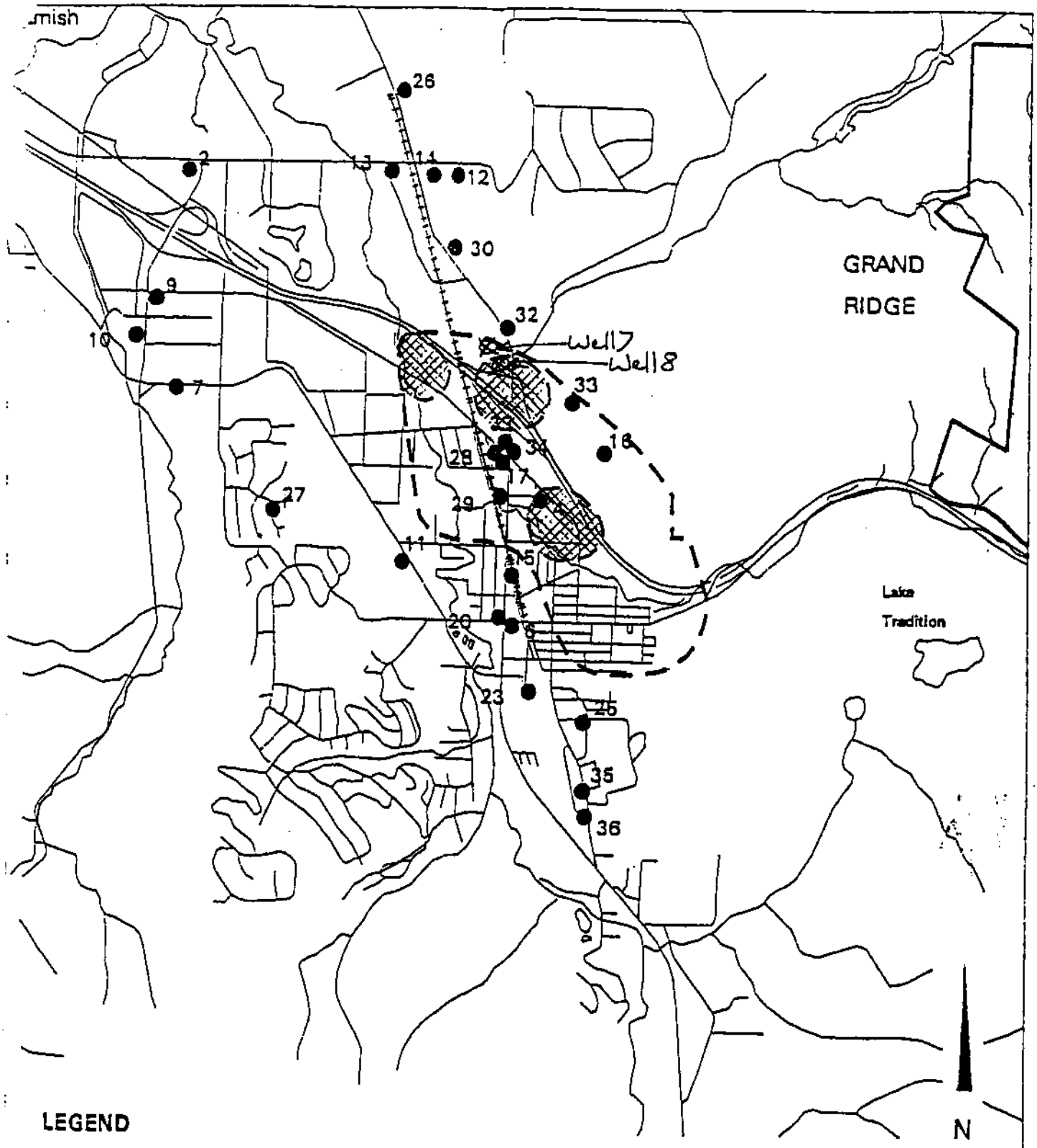

LEGEND

13 ● Underground Storage Tank (Reference number)

One year capture zones

Five year capture zone

Sites 1, 3, 5, 8, 18, 19, 21, 22, 24, and 31 are outside the immediate vicinity of capture zones

0 1000 3000

FEET

FIGURE 23

UNDERGROUND STORAGE TANKS IN VICINITY OF 1-YR AND 5-YR CAPTURE ZONES

SAMMAMISH PLATEAU/WHP STUDY/WA

3-1252 \gugio.aml 5/3/93

Golder Associates

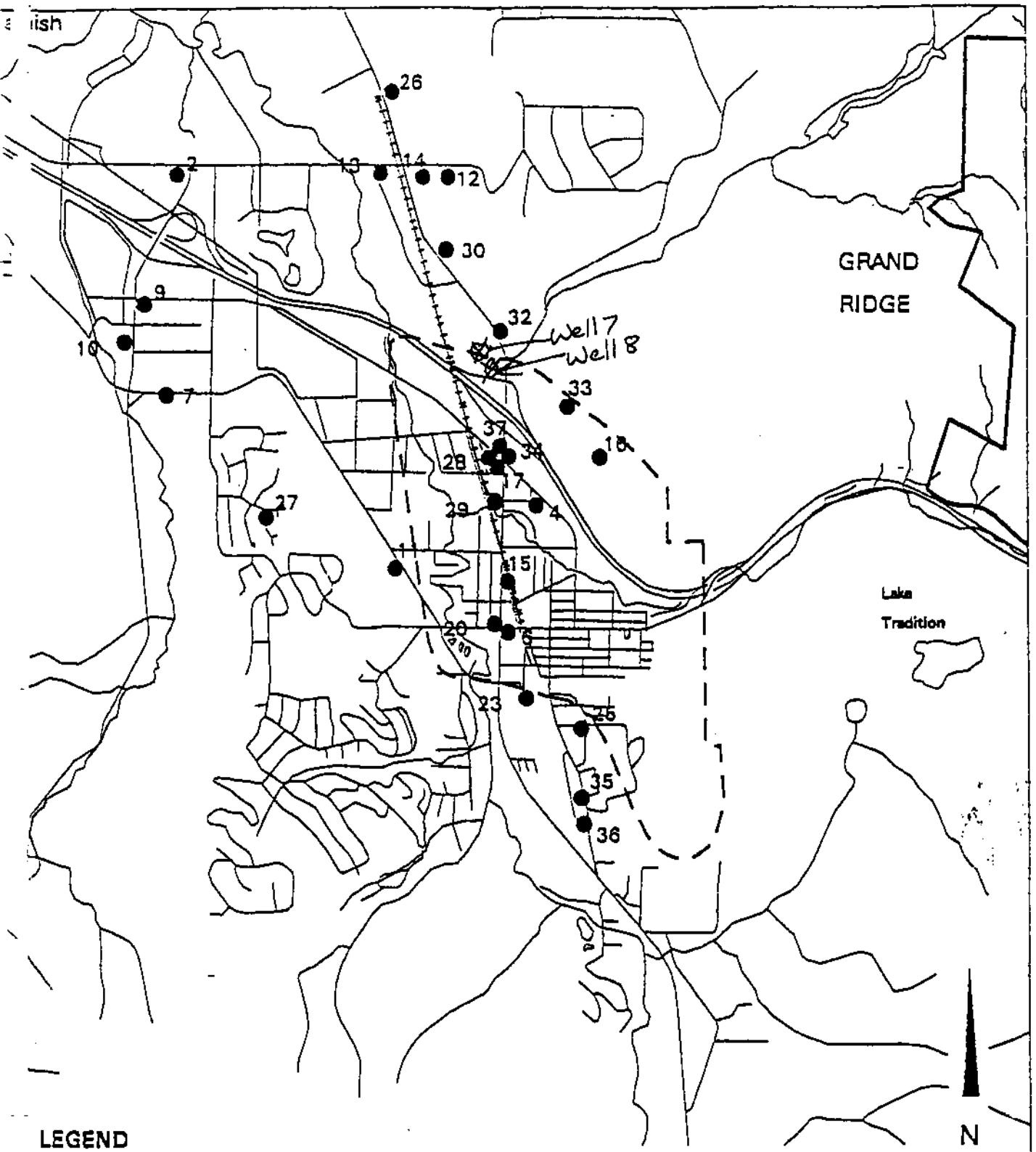

LEGEND

●13 Underground Storage Tank (Reference number)

— - Ten year capture zone

Sites 1, 3, 5, 8, 18, 19, 21, 22, 24, and 31 are outside the immediate vicinity of capture zone

0 1000 3000

FEET

FIGURE 24

UNDERGROUND STORAGE TANKS IN VICINITY OF 10-YR CAPTURE ZONE

SAMMAMISH PLATEAU/WHP STUDY/WA

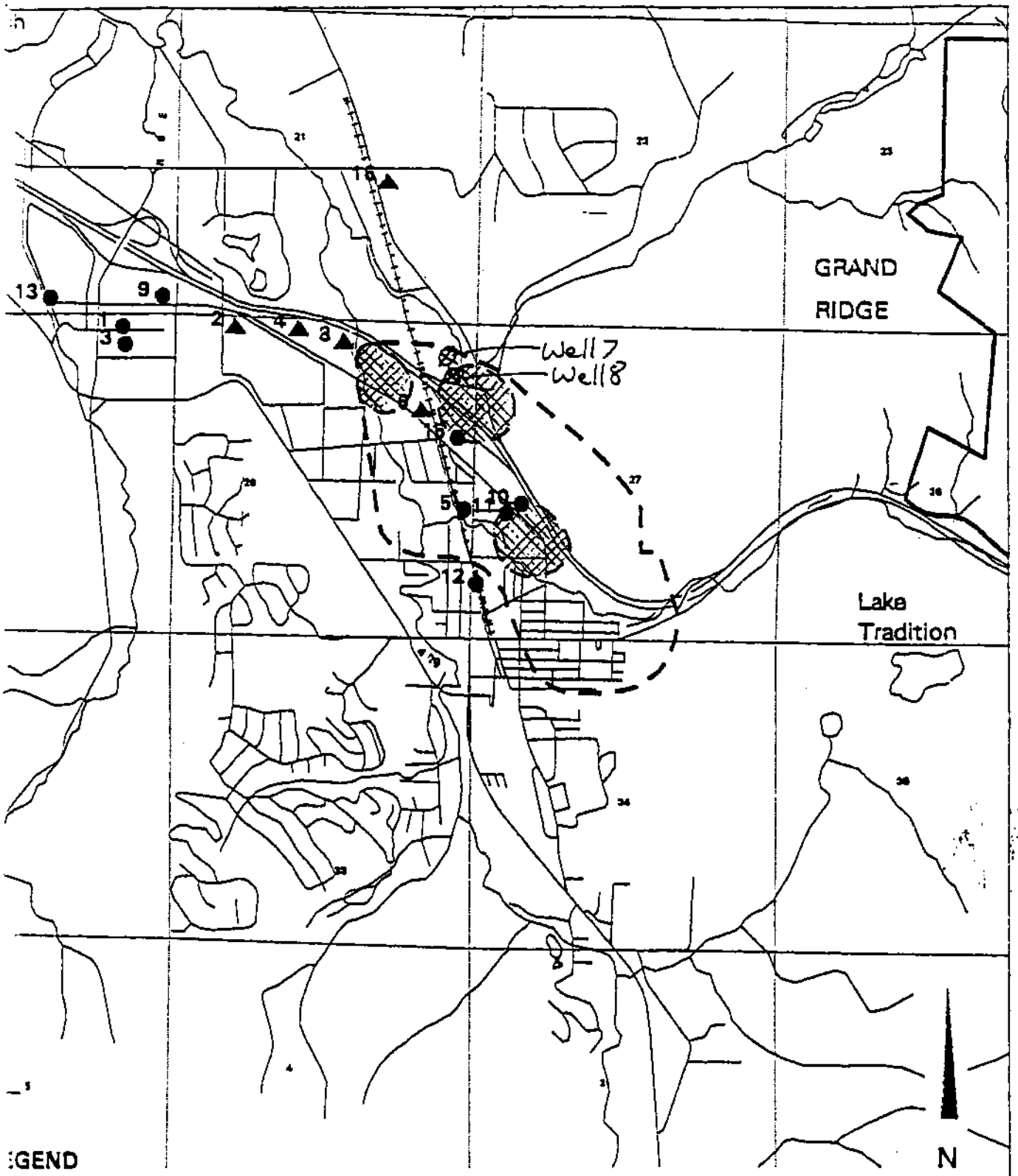

:GEND

13
● Chemical Handlers
(Chemical handler reference number)

4
▲ Onsite Dry Cleaners
(Chemical handler reference number)

One year capture zones

— — Five year capture zone

:tes 7 and 14 are not within map range

0 1000 3000
FEET

FIGURE 26
CHEMICAL HANDLER LOCATIONS IN
VICINITY OF 1-YR AND 5-YR CAPTURE ZONES
SAMMAMISH PLATEAU/WHP STUDY/WA

.2 fgcld.aml 11/11/93

Golder Associates

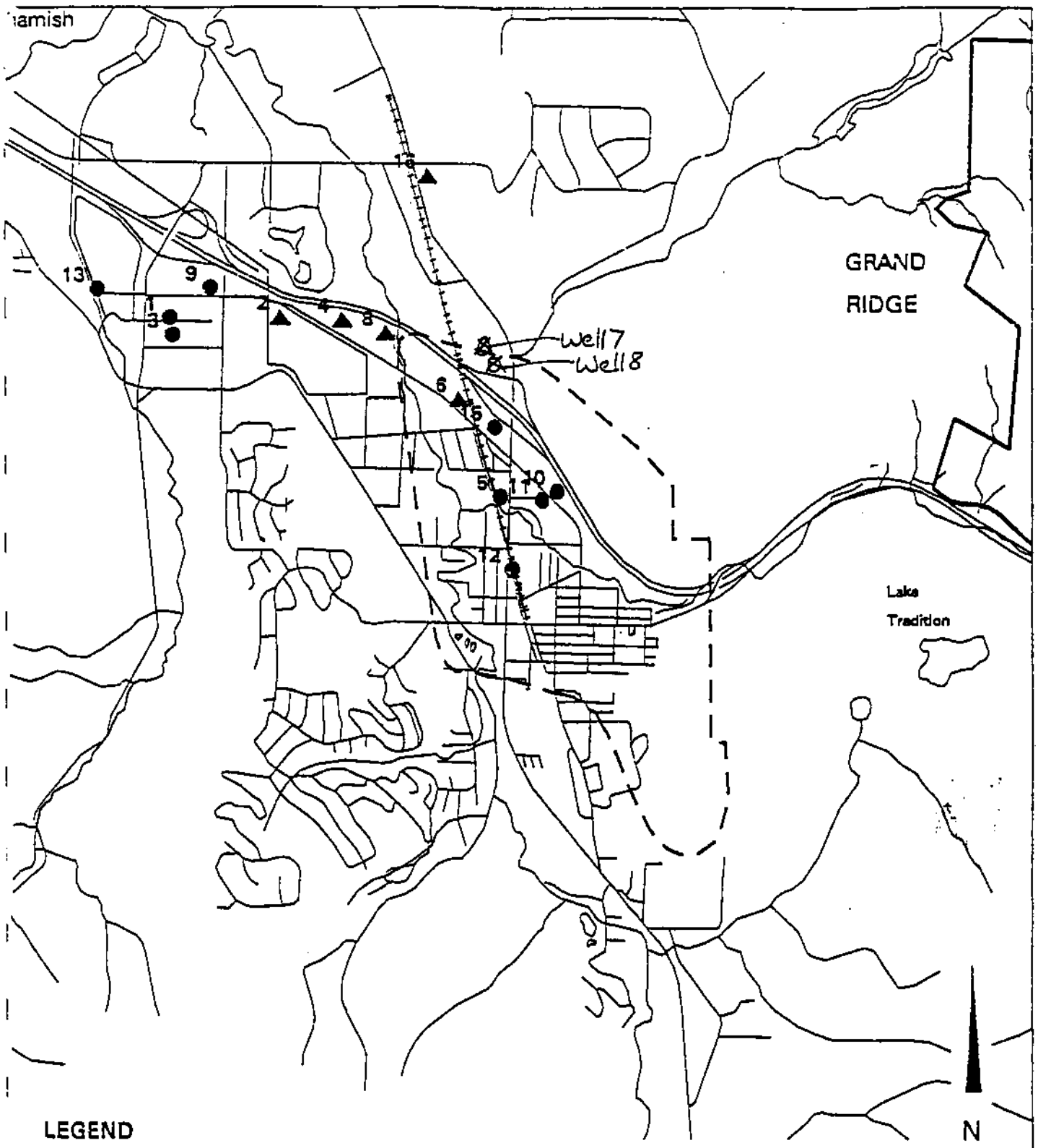

LEGEND

13 ● Chemical Handlers (Chemical handler reference number)

4 ▲ Onsite Dry Cleaners (Chemical handler reference number)

— - Ten year capture zone

Sites 7 and 14 are not within map range

0 1000 3000

FEET

FIGURE 27

CHEMICAL HANDLER LOCATIONS IN VICINITY OF 10-YEAR CAPTURE ZONE

SAMMAMISH PLATEAU/WHP STUDY/WA

113-1252 fgclc10.aml 5/18/93

Golder Associates

TABLE 15

SUMMARY UST'S AND CHEMICAL HANDLERS IN WHPA'S

	Source Type/Number	Owner	Contaminant	Quantity Onsite (gallons)	Previous Quantities	Number of Operational Tanks
1-YR WHPA - COI 1/2	UST-14	Reda Transportation	Gasoline	20,000	NA	1
	CH-10	Gilman Auto Body	Solvent	55	NA	-
	CH-11	Grange Supply	Solvent	55	NA	-
	UST-4	Grange Supply	Gasoline	70,000	NA	3
1-YR WHPA - COI 4/5	None					
1-YR WHPA - SPWSD 7/8	CH-15	Precision Tune	Waste oil	500		-
	UST-17	Chevron	Gasoline	60,000	NA	3
	UST-28	B.P.	Gasoline	82,200	NA	5
	UST-34	Arco	Gasoline	81,100	NA	5
	UST-37	Texaco	Gasoline	60,000	NA	4
5-YR WHPA	UST-33	Lakeside	Gasoline	61,100	NA	5
	UST-16	Closed	Gasoline	0	3,300	0
	UST-17	Chevron	Gasoline	60,000	NA	3
	UST-28	B.P.	Gasoline	82,200	NA	5
	UST-34	Arco	Gasoline	81,000	122,200	5
	UST-37	Texaco	Gasoline	80,000	NA	4
	UST-29	Darigold	Gasoline	60,000	60,000+	3
	CH-6	Dirks Dry Clean	Solvent	55	NA	-
	CH-5	Darigold	Diesel	NA	NA	-
	CH-12	Lakeside	Waste Oil/Solvent	5000/50	NA	-
10-YR WHPA	UST-15	Issaquah Feed	Gasoline	0	4,400	0
	UST-20	Mobil (closed)	Gasoline	30,000[1]	51,100	1
	UST-6	Texaco	Gasoline	50,000	NA	3
	UST-23	Issaquah Middle School	Gasoline	30,000	31,100	2
	UST-25	Clark Elementary	Gasoline	1,100	2,200	1
	UST-35	Bus Garage	Gasoline	0	11,100	1
	UST-36	Transportation	Gasoline	60,000	NA	1

[1] status unknown
[2] closed in-place
NA Not available

File Original and First Copy with Department of Ecology
Second Copy — Owner's Copy
Third Copy — Driller's Copy

WATER WELL REPORT
STATE OF WASHINGTON

Application No. .....
Permit No. .....

(1) OWNER: Name KING COUNTY WATER DISTRICT #82 Address 1510 228 th SE

(2) LOCATION OF WELL: County KING — NE ¼ NE ¼ Sec 28 T 24 N., R 6 E W.M.
Bearing and distance from section or subdivision corner

(3) PROPOSED USE: Domestic ☐ Industrial ☐ Municipal ☒
Irrigation ☐ Test Well ☐ Other ☐

(4) TYPE OF WORK: Owner's number of well (if more than one) 8
New well ☒ Method: Dug ☐ Bored ☐
Deepened ☐ Cable ☒ Driven ☐
Reconditioned ☐ Rotary ☐ Jetted ☐

(5) DIMENSIONS: Diameter of well 16 inches.
Drilled 190 ft. Depth of completed well ~~192~~ 189 ft.

(6) CONSTRUCTION DETAILS:
Casing installed: 16 " Diam. from +2.0 ft. to 105 ft.
Threaded ☐ " Diam. from 120 ft. to 125 ft.
Welded ☐ " Diam. from 135 ft. to 145 ft.

Perforations: Yes ☐ No ☒ 165 - 170
179 - 189
Type of perforator used
SIZE of perforations in. by in.
perforations from ft. to ft.
perforations from ft. to ft.
perforations from ft. to ft.

Screens: Yes ☒ No ☐
Manufacturer's Name uop-JOHNSON 304-SS
Type 16T Model No.
Diam. Slot size .060 from 105 ft. to 120 ft.
Diam. Slot size from 125 ft. to 135 ft.
~~145-165, 170-179~~

Gravel packed: Yes ☐ No ☒ Size of gravel:
Gravel placed from ft. to ft.

Surface seal: Yes ☒ No ☐ To what depth? 80 ft.
Material used in seal Cement/Bentonite
Did any strata contain unusable water? Yes ☐ No ☒
Type of water? Depth of strata
Method of sealing strata off

(7) PUMP: Manufacturer's Name
Type: H.P.

(8) WATER LEVELS: Land-surface elevation above mean sea level .... + 72 ft.
Static level 12.6 ft. below top of well Date 8/27/84
Artesian pressure lbs. per square inch Date
Artesian water is controlled by (Cap, valve, etc.)

(9) WELL TESTS: Drawdown is amount water level is lowered below static level
Was a pump test made? Yes ☒ No ☐ If yes, by whom? Driller
Yield: 1977 gal./min. with 22 ft. drawdown after 8 hrs.
" " " "
" " " "

Recovery data (time taken as zero when pump turned off) (water level measured from well top to water level)

Time	Water Level	Time	Water Level	Time	Water Level

Date of test
Bailer test gal./min. with ft. drawdown after hrs.
Artesian flow g.p.m. Date
Temperature of water Was a chemical analysis made? Yes ☐ No ☐

(10) WELL LOG:
Formation: Describe by color, character, size of material and structure, and show thickness of aquifers and the kind and nature of the material in each stratum penetrated, with at least one entry for each change of formation.

MATERIAL	FROM	TO
Fill, w/bark,roots,sand,cbls	0	11
D.Brown sand,gravel,silt,clay	11	14
D.Brown clay, minor gravel	14	17
Brown sand, gravel,silt,clay	17	32
Grey clay	32	34
Brown-blue sand,gravel,silt	34	42
wood,peat		
Clean sand, gravel	42	69
Dirty sand, gravel, layers	69	79
grey clay		
Grey silty clay	79	95
Sand, gravel, in brown clay	95	102
binder		
Sand, gravel, some cobbles	102	178
varying amounts	of fines	
Brown silty sand, gravel	178	190

Work started 8/6/84 19.... Completed 8/29/84 19....

WELL DRILLER'S STATEMENT:

This well was drilled under my jurisdiction and this report is true to the best of my knowledge and belief.

NAME Hokkaido Drilling & Developing (Person, firm, or corporation) (Type or print)
Address Graham, WA

[Signed] Bob Cooper (Well Driller)

License No. 1237 Date 9/12 19 84

"USE ADDITIONAL SHEETS IF NECESSARY"

DOE 550-1-20

Health
Environmental Health

WATER FACILITIES INVENTORY (WFI)

Read Instructions on back before completing

FILE
DATE RECEIVED 01/11/94
FEB 1 1994
Ans'd.....
UPDATED
DATE UPDATED 01/11/94

1. SYSTEM ID NO.	2. COUNTY	GROUP	TYPE	WRIA
90[illegible]	KING	A	COMM	9

3. SYSTEM NAME: SAMMAMISH PLATEAU WATER & SEWER

STREET ADDRESS: 1510 228TH AVE SE.

P.O. BOX (IF APPLICABLE):

CITY: ISSAQUAH STATE: WA ZIP CODE: 98027

4. OWNER'S NAME (LAST, FIRST): SAMMAMISH PLATEAU WATER & OWNER NO. 3007

STREET ADDRESS: 1510 228TH AVE. S.E.

P.O. BOX (IF APPLICABLE):

CITY: ISSAQUAH STATE: WA ZIP CODE: 98027

5. SYSTEM CONTACT PERSON: RONALD E. LITTLE - MANAGER TITLE:

DAY TELEPHONE: 206-392-6256 EVENING TELEPHONE:

WFI COMPLETED BY: TITLE:

DAY TELEPHONE: DATE:

8. SUBMITTED FOR: [ ] NEW SYSTEM [ ] SYSTEM NAME CHANGE* [ ] NO CHANGE [ ] UPDATE [ ] REACTIVATE [ ] DELETE

*OLD SYSTEM NAME - ENTER ONLY IF CHANGING WITH THIS WFI

SYSTEMS SERVING ANY RESIDENTS (PEOPLE LIVING IN A DWELLING SERVED BY THE SYSTEM), COMPLETE THIS SECTION

9. NUMBER ACTIVE RESIDENTIAL CONNECTIONS: 8844

10. NUMBER ACTIVE RESIDENTIAL POPULATION: 25,647

SYSTEMS SERVING ANY NON-RESIDENTS (I.E., TRAVELERS, EMPLOYEES, STUDENTS, ETC.), COMPLETE THIS SECTION

11. NUMBER NON-RESIDENTIAL CONNECTIONS:

12. ENTER AVERAGE DAILY NON-RESIDENTIAL POPULATION SERVED FOR EACH MONTH. MAKE ENTRY FOR EACH MONTH.

JAN		JULY	
	MAY		NOV.
MAR		SEP	

13. DOES THE SYSTEM SERVE AT LEAST 25 OF THE SAME NON-RESIDENTS FOR 4 OR MORE DAYS PER WEEK FOR AT LEAST 180 DAYS PER YEAR? [ ] YES [X] NO

14. TOTAL NUMBER CONNECTIONS METERED: 8,844

15. DISTRIBUTION RESERVOIR(S) TOTAL CAPACITY: 12,850,000 GALLONS

6. OWNERSHIP (CHECK ONE ONLY)

- [ ] PRIVATE NON-PROFIT
- [ ] PRIVATE FOR-PROFIT
- [X] LOCAL GOVERNMENT (COUNTY/CITY/PUD/WATER DISTRICT)
- [ ] STATE
- [ ] FEDERAL

7. PREDOMINANT CHARACTERISTIC (CHECK ONE ONLY)

- [X] RESIDENTIAL
- [ ] RECREATIONAL
- [ ] BUSINESS/INDUSTRIAL/AGRICULTURAL/COMMERCIAL
- [ ] LODGING/FOOD SERVICE
- [ ] SCHOOL/DAY CARE
- [ ] OTHER (CHURCHES, ETC.)

16. DOH SOURCE NUMBER	17. SOURCE NAME (LIST UTILITY'S NAME FOR SOURCE. IF SOURCE IS PURCHASED OR INTERTIED, LIST SELLER'S ID# AND NAME USING FOLLOWING FORMAT: XXXXXX/NAME EXAMPLE: 77050Y/SEATTLE)	18. SOURCE CATEGORY: WELL	WELL FIELD	SURFACE	SPRING	RAINWT/INF. GAL	INTERTIE	PURCHASE-TREATED	PURCHASE-UNTREATED	19. USE: PERMANENT	SEASONAL	EMERGENCY	20. SOURCE METERED	21. TREATMENT: NONE	CHLORINATION	FILTRATION	FLUORIDATION	OTHER	22. WELL DEPTH (FEET)	23. SOURCE CAPACITY (GPM)	24. SOURCE LOCATION: 1/4, 1/4 SEC.	SEC. NO.	TWP	RNG.	SWTR EVALUATION VOC EVALUATION
501	WELL 1	X								X				X					154	500	SW/NE	10	24N	06E	
502	WELL 2	X									X			X					132	360	NW/SE	11	24N	06E	
503	WELL # 5	X								X					X				716	450	NW/SW	34	25N	06E	
504	WELL # 4	X								X					X				714	625	SW/NW	34	25N	06E	
505	WELL 6	X									X				X				365	500	NE/SE	32	25N	06E	
506	WELL #7	X									X			X					150	2,000	SE/SE	21	24N	06E	
507	WELL #8	X								X				X					150	3,500	SE/SE	21	24N	06E	

MINIMUM REQUIRED BACTERIOLOGICAL SAMPLING SCHEDULE

25.	26.	JAN	FEB	MAR	APR	MAY	JUN	JUL	AUG	SEP	OCT	NOV	DEC
		30	30	30	30	30	30	30	30	30	30	30	30

NO. APPROVED SERVICES (PER PLANS): 0 DATE OF LAST SANITARY SURVEY: 0000 BY DOH [ ] LHD [ ]

SYSTEM IN CRITICAL WATER SUPPLY SERVICE AREA? [ ] YES [ ] NO GW MGMT AREA? [ ] YES [ ] NO FOR LHD USE ONLY

EFFECTIVE DATE RETRO. CHANGES: SIGNATURE OF DOH REVIEWER: DATE:

WATER SYSTEM

1989

SAMMAMISH PLATEAU WATER & SEWER DISTRICT

WATER SAMPLE INFORMATION FOR INORGANIC CHEMICAL ANALYSES - 1989

ITEM	WELL 1 8/4/89	WELL 2 4/10/89	WELL 4 4/10/89	WELL 5 4/10/89	WELL 6 7/17/89	WELL 7 7/17/89	WELL 8 4/10/89	*MCL
pH	7.06	7.23	8.22	8.32	7.46	7.48	*7.05	----
Arsenic	*0.010	*0.010	*0.010	*0.010	*0.010	*0.010	*0.010	0.05
Barium	*0.25	*0.25	*0.25	*0.25	*0.25	*0.25	*0.25	1.0
Cadmium	*0.002	*0.002	*0.002	*0.002	*0.002	*0.002	*0.002	0.01
Chromium	*0.010	*0.010	*0.010	*0.010	*0.010	*0.010	*0.010	0.005
Iron	*0.05	*0.05	*0.05	*0.05	*0.05	0.05	*0.05	0.3
Lead	*0.010	*0.010	*0.010	*0.010	*0.010	*0.010	*0.010	0.05
Manganese	*0.010	*0.010	0.041	0.042	0.026	*0.010	*0.010	0.05
Mercury	*0.0010	*0.0010	*0.0010	*0.0010	*0.0010	*0.0010	*0.0010	0.002
Selenium	*0.005	*0.005	*0.005	*0.005	*0.005	*0.005	*0.005	0.01
Silver	*0.010	*0.010	*0.010	*0.010	*0.010	*0.010	0.010	0.05
Sodium	*10	*10	*10	*10	*10	*10	*10	
Hardness	60	87	63	61	48	74	81	
Conductivity	155	220	160	150	120	200	200	700
Turbidity	*0.1	*0.4	*0.2	*0.1	*0.1	0.2	*0.1	1.0
Color	*5.0	*5.0	*5.0	*5.0	*5.0	15.0	*5.0	15.0
Fluoride	*0.2	*0.2	*0.2	*0.2	*0.2	*0.2	*0.2	2.0
Nitrate	1.1	*0.7	*0.2	*0.2	*0.2	1.6	*0.2	10.0
Chloride	*10	*10	*10	*10	*10	*10	*10	250
Sulfate								250

PARTS PER MILLION

*MCL Is the Maximum Contaminant Level Allowed

*Less Than

(Note: Well 7 was re-tested for Iron & Turbidity and those numbers are listed above.)

AnTest/tch

SAMMAMISH PLATEAU WATER AND SEWER DISTRICT
WATER SAMPLE INFORMATION FOR INORGANIC CHEMICAL ANALYSIS - 1990

ITEM	WELL 1 9/7/90	WELL 2 4/10/89	WELL 4 9/7/90	WELL 5 9/7/90	WELL 6 9/7/90	WELL 7 9/7/90	WELL 8 9/7/90	** MCL
pH	6.74	7.23	7.26	7.74	7.88	7.29	7.12	
Arsenic	<0.010	<0.010	<0.010	<0.010	<0.010	<0.010	<0.010	0.05
Barium	<0.25	<0.25	<0.25	<0.25	<0.25	<0.25	<0.25	1.00
Cadmium	<0.002	<0.002	<0.002	<0.002	<0.002	<0.002	<0.002	0.01
Chromium	<0.010	<0.010	<0.010	<0.010	<0.010	<0.010	<0.010	0.05
Iron	<0.05	<0.05	<0.05	<0.05	<0.05	<0.05	<0.05	0.3
Lead	<0.005	<0.0100	<0.005	<0.005	<0.005	<0.005	<0.005	0.05
Manganese	<0.010	<0.0100	<0.039	<0.037	<0.028	<0.010	<0.010	0.05
Mercury	<0.0010	<0.0010	<0.0010	<0.0010	<0.0010	<0.0010	<0.0010	0.002
Selenium	<0.05	<0.005	<0.005	<0.005	<0.005	<0.005	<0.005	0.01
Silver	<0.010	<0.0100	<0.010	<0.010	<0.010	<0.010	<0.010	0.05
Sodium	<10	<10	<10	<10	<10	<10	<11	
Hardness	79	87	58	58	51	72	72	
Conductivity	85	220	150	154	125	189	188	700
Turbidity	<0.2	<0.4000	<0.1	<0.1	<0.2	<0.1	<0.9	1.0
Color	<5.0	<5.0	<10.0	<10.0	<5.0	<5.0	<10.	15
Fluoride	<0.2	<0.2000	<0.2	<0.2	<0.2	<0.2	<0.2	2.0
Nitrate	<1.3	<0.7000	<0.2	<0.2	<0.2	<0.2	<1.3	10.0
Chloride	<10	<10	<10	<10	<10	<10	<10	250

PARTS PER MILLION

< Less than Detectable Limits

** Maximum Contaminant Level

SAMMAMISH PLATEAU WATER AND SEWER DISTRICT
WATER SAMPLE INFORMATION FOR INORGANIC CHEMICAL ANALYSIS - 1991

ITEM	WELL 1 7/12/91	WELL 2 7/12/91	WELL 4 7/12/91	WELL 5 7/12/91	WELL 6 7/12/91	WELL 7 7/12/91	WELL 8 7/12/91	** MCL
pH	6.6	6.4	7.3	6.7	6.7	7.1	6.8	
Arsenic	<0.010	<0.010	<0.010	<0.010	<0.010	<0.010	<0.010	0.05
Barium	<0.25	<0.25	<0.25	<0.25	<0.25	<0.25	<0.25	1.00
Cadmium	<0.002	<0.002	<0.002	<0.002	<0.002	<0.002	<0.002	0.01
Chromium	<0.010	<0.010	<0.010	<0.010	<0.010	<0.010	<0.010	0.05
Iron	<0.05	<0.05	<0.05	<0.05	<0.05	<0.05	<0.05	0.3
Lead	<0.005	<0.005	<0.005	<0.005	<0.005	<0.005	<0.005	0.05
Manganese	<0.010	<0.010	<0.018	<0.026	<0.023	<0.010	<0.010	0.05
Mercury	<0.0010	<0.010	<0.0010	<0.0010	<0.0010	<0.0010	<0.0010	0.002
Selenium	<0.005	<0.005	<0.005	<0.005	<0.005	<0.005	<0.005	0.01
Silver	<0.010	<0.010	<0.010	<0.010	<0.010	<0.010	<0.010	0.05
Sodium	7.	6.	9.	8	5	10	12	
Hardness	61	66	52	51	43	61	75	
Conductivity	180	270	120	130	120	190	210	700
Turbidity	0.2	0.6	.4	<0.3	.3	.4	0.3	1.0
Color	<5.0	<5.0	<5.0	<5.0	<5.0	<5.0	<5.	15
Fluoride	<0.2	<0.2	<0.2	<0.2	<0.2	<0.2	<0.2	
Nitrate	1.2	<1.9	1.8	<0.2	<0.2	<0.2	1.3	
Chloride	<10	<10	<10	<10	21	24	<10	

SAMMAMISH PLATEAU WATER AND SEWER DISTRICT
WATER SAMPLE INFORMATION FOR INORGANIC CHEMICAL ANALYSIS - 1992

ITEM	WELL 1 2/14/92	WELL 2 2/14/92	WELL 4 2/14/92	WELL 5 2/14/92	WELL 6 2/14/92	WELL 7 2/14/92	WELL 8 7/12/91	** MCL
pH	7.0	7.3	7.93	8.4	8.4	7.7	6.8	
Arsenic	<0.010	<0.01	<0.01	<0.01	<0.01	<0.01	<0.010	.05
Barium	<0.1	<0.1	<0.1	<0.1	<0.1	<0.1	<0.25	1.00
Cadmium	<0.002	<0.002	<0.002	<0.002	<0.002	<0.002	<0.002	0.01
Chromium	<0.05	<0.05	<0.05	<0.05	<0.05	<0.05	<0.010	0.05
Iron	<0.05	<0.05	<0.05	<0.05	0.37	<0.05	<0.05	0.3
Lead	<0.002	<0.002	<0.0025	<0.002	<0.002	<0.002	<0.005	0.05
Manganese	<0.01	<0.01	0.043	<0.041	0.038	<0.01	<0.010	0.05
Mercury	<0.0002	<0.0002	<0.0002	<0.0002	<0.0002	<0.0002	<0.0010	0.002
Selenium	<0.005	<0.005	<0.005	<0.005	<0.005	<0.005	<0.005	0.01
Silver	<0.01	<0.01	<0.01	<0.01	<0.01	<0.01	<0.010	0.05
Sodium	9.5	6.1	8.7	8.4	4.8	10	12	
Hardness	85.	75	62	62	56	79	75	
Conductivity	180.	150	140	140	120	170	210	700
Turbidity	0.46	0.42	.33	0.32	.90	.32	0.3	1.0
Color	<5.0	<5.0	<5.0	<5.0	<5.0	<5.0	<5.	15
Fluoride	<0.5	<0.5	<0.5	<0.5	<0.5	<0.5	<0.2	2
Nitrate	1.0	<1.8	<1.0	<1.0	<1.0	<1.0	1.3	10
Chloride	<20.	<20	<20	<20	<20	<20	<10	250
Sulfate	10.	<10.	<10.	<10	<10	11		250
Copper	<0.02	<0.02	<0.02	<0.02	<0.02	<0.02		1.0
Zinc	<0.05	<0.05	<0.05	<0.05	<0.05	<0.05		5.0
Aluminum	<5.0	<5.0	<5.0	<5.0	<5.0	<5.0		
Calcium	19.	18.	18	18	16	20.		

SAMMAMISH PLATEAU WATER AND SEWER DISTRICT
WATER SAMPLE INFORMATION FOR INORGANIC CHEMICAL ANALYSIS - 1993

ITEM	WELL 1	WELL 2	WELL 4	WELL 5	WELL 6	WELL 7	WELL 8	WELL 9	** MCL
	3-2-93	3-2-93	3-2-93	3-2-93	3-2-93	3-2-93	3-2-93	3-2-93	
Arsenic	< 0.01	< 0.01	< 0.01	< 0.01	< 0.01	< 0.01	< 0.01	< 0.01	0.05
Barium	< 0.1	< 0.1	< 0.1	< 0.1	< 0.1	< 0.1	< 0.1	< 0.1	1
Cadmium	< 0.002	< 0.002	< 0.002	< 0.002	< 0.002	< 0.002	< 0.002	< 0.002	0.01
Chromium	< 0.05	< 0.05	< 0.05	< 0.05	< 0.05	< 0.05	< 0.05	< 0.05	0.05
Copper	< 0.02	< 0.02	< 0.02	< 0.02	< 0.02	< 0.02	< 0.02	< 0.02	1.3
Iron	< 0.05	< 0.05	< 0.05	< 0.05	< 0.05	< 0.05	< 0.05	< 0.17	0.3
Lead	< 0.002	< 0.002	< 0.002	< 0.002	< 0.002	< 0.002	< 0.002	< 0.002	0.05
Manganese	< 0.01	< 0.01	< 0.043	< 0.041	< 0.092	< 0.01	< 0.01	< 0.01	0.05
Mercury	< 0.0002	< 0.0002	< 0.0002	< 0.0002	< 0.0002	< 0.0002	< 0.0002	< 0.0002	0.002
Selenium	< 0.005	< 0.005	< 0.005	< 0.005	< 0.005	< 0.005	< 0.005	< 0.005	0.01
Silver	< 0.01	< 0.01	< 0.01	< 0.01	< 0.01	< 0.01	< 0.01	< 0.01	0.05
Sodium	9.1	9.3	9.0	7.7	8.4	9.5	10.	8.5	
Zinc	< 0.05	< 0.05	< 0.05	< 0.05	< 0.05	< 0.05	< 0.05	< 0.05	5
Hardness	78.	80	65	65	93	79	75	68	
Conductivity	190	150	160	150	210	190	190	160	700
Turbidity	0.10	0.49	0.17	0.15	0.1	0.1	0.14	0.43	1
Color	5.	5.	5.	5.	5.	5.	5.	5.	15
Chloride	< 20	< 20	< 20	< 20	< 20	< 20	< 20	< 20	250
Fluoride	< 0.5	< 0.5	< 0.5	< 0.5	< 0.5	< 0.5	< 0.5	< 0.5	2
Nitrate	< 1.0	< 1.0	< 1.0	< 1.0	< 1.0	< 1.0	< 1.1	< 1.0	10
Sulfate	< 10	< 10	< 10	< 13	< 10	< 10	< 10	< 10	250

LEGEND

< Less Than Detectable Limits

** Maximum Contaminant Level

Ground Water Contamination
Susceptibility Assessment Survey Form
Version 2.1

IMPORTANT! Please complete one form for each ground water source (well, wellfield, spring) used in your water system. Photocopy as necessary.

PART I: System Information

Well owner/manager : SAMMAMISH PLATEAU WATER + SEWER DIST.

Water system name : SAMMAMISH PLATEAU WATER + SEWER DIST

County: KING

Water system number: 409009 Source number: 507

Well depth: 150 (ft.) (*From WFI form*)

Source name: WELL 8

WA well identification tag number:__ __ __-__ __ __

____ well not tagged

Number of connections: 9000 Population served: 26,000

Township: 24N Range: 06E

Section: 21 1/4 1/4 Section: SE/SE

Latitude/longitude (if available): _____/_____

How was lat./long. determined?

____ global positioning device ____ survey ____ topographic map
____other: _____

* Please refer to Assistance Packet for details and explanations of all questions in Parts II through V.

PART II: Well Construction and Source Information

1) Date well originally constructed: 8/29/84 month/day/year

last reconstruction: __/__/__ month/day/year

____ information unavailable

2) Well driller: HOKKAIDO DRILLING & DEV.
P.O. BOX 100
GRAHAM WA.

___ well driller unknown

3) Type of well:

X Drilled: ___ rotary ___ bored X cable (percussion) ___ Dug

___ Other: ___ spring(s) ___ lateral collector (Ranney)

___ driven ___ jetted ___ other: _____

Additional comments: _____

4) Well report available? X YES (attach copy to form) ___ NO

If no well log is available, please attach any other records documenting well construction; e.g. boring logs, "as built" sheets, engineering reports, well reconstruction logs.

5) Average pumping rate: 3500 (gallons/min)

Source of information: WATER FACILITIES INVENTORY

If not documented, how was pumping rate determined? _____

___ Pumping rate unknown

6) Is this source treated? YES - will be

If so, what type of treatment:

___ disinfection ___ filtration ___ carbon filter ___ air stripper X other

___ Purpose of treatment (describe materials to be removed or controlled by treatment):

IN 1994 TREATMENT TO RAISE PH USING SODIUM HYDROXIDE — FOR CORROSION CONTROL TO BE IMPLEMENTED IN FALL OF 1994

7) If source is chlorinated, is a chlorine residual maintained: ___ YES ___ NO N/A

Residual level: _____ *(At the point closest to the source.)*

PART III: Hydrogeologic Information

1) Depth to top of open interval: [check one]

___ < 20 ft ___ 20–50 ft ___ 50–100 ft X 100–200 ft ___ > 200 ft

___ information unavailable ('< ' *means less than;* '> ' *means greater than*)

2) Depth to ground water (static water level):

X < 20 ft ___ 20–50 ft ___ 50–100 ft ___ > 100 ft

___ flowing well/spring (artesian)

How was water level determined?

X well log ___ other: _____

___ depth to ground water unknown

3) If source is a flowing well or spring, what is the confining pressure: N/A

_____ psi (pounds per square inch)
or
_____ feet above wellhead

4) If source is a flowing well or spring, is there a surface impoundment, reservoir, or catchment associated with this source: ___ YES ___ NO N/A

5) Wellhead elevation (height above mean sea level): ± 72 (ft)

How was elevation determined? ___ topographic map X Drilling/Well Log ___ altimeter

___ other: _____

___ information unavailable

6) Confining layers: (This can be completed only for those sources with a drilling log, well log or geologic report describing subsurface conditions. Please refer to assistance package for example.)

YES evidence of a confining layer in well log

___ no evidence of a confining layer in well log

If there is evidence of a confining layer, is the depth to ground water more than 20 feet above the top of the open interval? X YES ___ NO

___ information unavailable

7) Sanitary setback:

X < 100 ft* ___ 100–120 ft ___ 120–200 ft ___ > 200 ft
* if less than 100 ft describe the site conditions:

8) Wellhead construction:

X wellhead enclosed in a wellhouse

X controlled access (describe): GATED / LOCKED

___ other uses for wellhouse (describe): ___

___ no wellhead control

9) Surface seal:

___ 18 ft

___ < 18 ft (no Department of Ecology approval) ('<' *means less than*)

___ < 18 ft (Approved by Ecology, include documentation) ('<' *means less than*)

X > 18 ft ('>' *means greater than*)

___ depth of seal unknown

___ no surface seal

10) Annual rainfall (inches per year):

___ < 10 in/yr ___ 10–25 in/yr X > 25 in/yr

PART IV: **Mapping Your Ground Water Resource**

1) Annual volume of water pumped: 151,020,000 (gallons)

How was this determined?

X meter

___ estimated: ___ pumping rate (_____)

___ pump capacity (_____)

___ other: _____

2) "Calculated Fixed Radius" estimate of ground water movement:
(see Instruction Packet)

6 month ground water travel time : 440 (ft)

1 year ground water travel time : 620 (ft)

5 year ground water travel time: 1390 (ft)

10 year ground water travel time: 1970 (ft)

The Sammamish Plateau Water + Sewer District participated in the Lower Issaquah Valley Wellhead Protection Plan. The Figures for 1yr., 5yr. + 10yr. Capture Zones are attached, as well as figures regarding potential contamination sources. A complete copy of the report is also included. District Wells 7 + 8 are considered combined

Information available on length of screened/open interval?

X YES ___ NO

Length of screened/open interval: 54 (ft)

3) Is there a river, lake, pond, stream, or other obvious surface water body within the 6 month time of travel boundary? X YES ___ NO (mark and identify on map).

4) Is there a stormwater and/or wastewater facility, treatment lagoon, or holding pond located within the 6 month time of travel boundary? ___ YES ___ NO (mark and identify on map).

Comments: _____

PART V: Assessment of Water Quality

1) Regional sources of risk to ground water:

Please indicate if any of the following are present within a circular area around your water source having a radius up to and including the five year ground water travel time:

Note: We used the 1 year capture zone →

	6 month	1 year	5 year	unknown
likely pesticide application	✓	✓	✓	
stormwater injection wells				✓
other injection wells				✓
abandoned ground water well				✓
landfills, dumps, disposal areas	No	No	No	
known hazardous materials clean-up site	No	No	Yes	✓
water system(s) with known quality problems				✓
population density > 1 house/acre	No	No	No	
residences commonly have septic tanks	No	No	Yes	
Wastewater treatment lagoons	No	No	No	
sites used for land application of waste	No	No	No	

Mark and identify on map any of the risks listed above which are located within the 6 month time of travel boundary? *(Please include a map of the wellhead and time of travel areas with this form. Please locate and mark any of the following.)*

If other recorded or potential sources of ground water contamination exist within the ten year time of travel circular zone around your water supply, please describe:

Underground Storage Tanks - See attached Figures + table
Chemical Handlers
Lube/Oil Change Facilities
Car Repair Stations
Dry Cleaners

2) Source specific water quality records:

Please indicate the occurrence of any test results since 1986 that meet the following conditions: (Unless listed on assessment, MCLs are listed in assistance package.)

A. Nitrate: (Nitrate MCL = 10 mg/l)	YES	NO
Results greater than MCL	___	___
< 2 mg/liter nitrate	___	___
2-5 mg/liter nitrate	___	___
> 5 mg/liter nitrate	___	___
___ Nitrate sampling records unavailable		

B. VOCs: (VOC detection level 0.5 ug/l or 0.0005 mg/l.)	YES	NO
Results greater than MCL or SAL	___	X
VOCs detected at least once	___	X
VOCs never detected	X	___
___ VOC sampling records unavailable		

C. EDB/DBCP:	YES	NO
(EDB MCL = 0.05 ug/l or 0.00005 mg/l. DBCP MCL = 0.2 ug/l or 0.0002 mg/l.)		
EDB/DBCP detected below MCL at least once	___	___
EDB/DBCP detected above MCL at least once	___	___
EDB/DBCP never detected	___	___
___ EDB/DBCP tests required but not yet completed		
X EDB/DBCP tests not required		

D. Other SOCs (Pesticides):	YES	NO
Other SOCs detected (pesticides and other synthetic organic chemicals)	___	___

___ Other SOC tests performed but none detected
(list test methods in comments
X Other SOC tests not performed

If any SOCs in addition to EDB/DBCP were detected, please identify and date. If other SOC tests were performed, but no SOCs detected, list test methods here: _____

_____

_____

_____

E. Bacterial contamination:

	YES	NO
Any bacterial detection(s) in the past 3 years in samples taken from the source (not distribution sampling records).	___	✓
Has source (in past 3 years) had a bacteriological contamination problem found in distribution samples that was attributed to the source.	___	✓

___ Source sampling records for bacteria unavailable

Part VI: Geographic or Hydrologic Factors Contributing to a Non-Circular Zone of Contribution

The following questions will help identify those ground water systems which may not be accurately represented by the calculated fixed radius (CFR) method described in Part IV. For these sources, the CFR areas should be used as a preliminary delineation of the critical time of travel zones for that source. As a system develops its Wellhead Protection Plan for theses sources, a more detailed delineation method should be considered.

1) Is there evidence of obvious hydrologic boundaries within the 10 year time of travel zone of the CFR? (Does the largest circle extend over a stream, river, lake, up a steep hillside, and/or over a mountain or ridge?)

✓ YES ___ NO

Describe with references to map produced in Part IV:

ISSAQUAH CREEK
GRAVEL Pits (Steep Hill) Grand Ridge Area

2) Aquifer Material:

A) Does the drilling log, well log or other geologic/engineering reports identify that the well is located in an area where the underground conditions are identified as fractured rock and/or basalt terrain?

___ YES ✓ NO

B) Does the drilling log, well log or other geologic/engineering reports indicate that the well is located in an area where the underground conditions are primarily identified as coarse sand and gravel?

✓ YES ___ NO

3) Is the source located in an aquifer with a high horizontal flow rate? (These can include sources located on flood plains of large rivers, artesian wells with high water pressure, and/or shallow flowing wells and springs.)

___ YES ✓ NO

4) Are there other high capacity wells (agricultural, municipal and/or industrial) located within the CFRs? YES

a) Presence of ground water extraction wells removing more than approximately 500 gal/min within...

	YES	NO	unknown
< 6 month travel time	✓		
6 month–1 year travel time	✓		
1–5 year travel time	✓		
5–10 year travel time	✓		

b) Presence of ground water recharge wells (dry wells) or heavy irrigation within...

	YES	NO	unknown
< 1 year travel time			✓
1–5 year travel time			✓
5–10 year travel time			✓

Please identify or describe additional hydrologic or geographic conditions that you believe may affect the shape of the zone of contribution for this source. Where possible, reference them to locations on the map produced in Part IV.

See Lower Issaquah Valley Wellhead Protection Plan

District Wells 7+8 are considered together
The District is currently applying for a well field designation.

Suggestions and Comments

Did you attend one of the susceptibility workshops? ___ YES ___ NO

Did you find it useful? ___ YES ___ NO

Did you seek outside assistance to complete the assessment? ___ YES ___ NO

This form and instruction packet are still in the process of development. Your comments, suggestions and questions will help us upgrade and improve this assessment form. If you found particular sections confusing or problematic please let us know. How could this susceptibility assessment be improved or made clearer? Did the instruction package help you find the information needed to complete the assessment? How much time did it take you to complete the form? Were you able to complete the assessment without additional/outside expertise? Do you feel the assessment was valuable as a learning experience? Any other comments or constructive criticisms you have would be appreciated.

_____

_____

_____

_____

_____

_____

_____

_____

_____

Ground Water Contamination
Susceptibility Assessment Survey Form
Version 2.2

IMPORTANT! Please complete one form for each ground water source (well, wellfield, spring) used in your water system.
Photocopy as necessary.

PART I: System Information

Well owner/manager : Sammamish Plateau Water & Sewer District

Water system name : Sammamish Plateau Water & Sewer District

County: King

Water system number: 409009 Source number: S13

Well depth: 222 (ft.) (*From WFI form*)

Source name: Well 9

WA well identification tag number: AAD–365

Number of connections: 14358 Population served: 48,036

Township: 24N Range: 06E

Section: 27 1/4 1/4 Section: SW1/4 of the NW1/4

Latitude/longitude (if available): 47.53978 / -122.03307
How was lat./long. determined?

_____ global positioning device _____ survey _____ topographic map
_x_ other: Online King County imap - http://www.metrokc.gov/gis/mapportal/iMAP_main.htm

* Please refer to Assistance Packet for details and explanations of all questions in Parts II through V.

PART II: Well Construction and Source Information

1) Date well originally constructed: 07 / 15 / 91 month/day/year

last reconstruction: __ / __ /__ month/day/year

_____ information unavailable

2) Well driller: Hokkaido Well Drillng and Development Corporation

24511 104th Avenue Court East

Graham, WA 98338

__ well driller unknown

3) Type of well:

_x_ Drilled: __ rotary __ bored _X_ cable (percussion) _ Dug

__ Other: __ spring(s) __ lateral collector (Ranney)

__ driven __ jetted __ other:

Additional comments: _____

4) Well report available? _x_ YES (attach copy to form) __ NO

If no well log is available, please attach any other records documenting well construction; e.g. boring logs, "as built" sheets, engineering reports, well reconstruction logs.

5) Average pumping rate: 2,000 (gallons/min) Drilling and Completion Reports for Test Wells VT-7 and VT-8 and Production Well 9 (Carr/Associates, 1992)

If not documented, how was pumping rate determined? _____

_ Pumping rate unknown

6) Is this source treated?

If so, what type of treatment:

_x_ disinfection ___ filtration __ carbon filter __ air stripper _X_ other

Purpose of treatment (describe materials to be removed or controlled by treatment):

Water is chlorinated, Fluoridated, and treated with NaOH (Caustic Soda) to increase natural water pH for corrosion control

7) If source is chlorinated, is a chlorine residual maintained: _X_ YES __ NO

Residual level: minimum 0.3 ppm free after the filters (*At the point closest to the source.*)

PART III: Hydrogeologic Information

1) Depth to top of open interval: [check one]

__ < 20 ft __ 20–50 ft __ 50–100 ft _X_ 100–200 ft ___>200 ft

__ information unavailable ('<' *means less than;* '>' *means greater than*)

2) Depth to ground water (static water level):

_X_ < 20 ft __ 20–50 ft __ 50–100 ft _X_ >100 ft

__ flowing well/spring (artesian)

How was water level determined?

__ well log _X_ other: ____Measured to within 0.01 ft with electronic sounding device_

_ depth to ground water unknown

3) If source is a flowing well or spring, what is the confining pressure:

_____ psi (pounds per square inch)
or
_____ feet above wellhead

4) If source is a flowing well or spring, is there a surface impoundment, reservoir, or catchment associated with this source: __ YES __ NO

5) Wellhead elevation (height above mean sea level): __76.99_ (ft)

How was elevation determined? __ topographic map __ Drilling/Well Log __ altimeter

_X_ other: _____1991 Lower Issaquah Valley Concept Engineering Survey_____

___ information unavailable

6) Confining layers: (This can be completed only for those sources with a drilling log, well log or geologic report describing subsurface conditions. Please refer to assistance package for example.)

_X_ evidence of a confining layer in well log
(Note: confining layers are thin and believed to pinch out to the east)

___ no evidence of a confining layer in well log

If there is evidence of a confining layer, is the depth to ground water more than 20 feet above the **bottom** of the **lowest confining layer**? _X_ YES __ NO

__ information unavailable

7) Sanitary setback:

_____ < 100 ft* __X_ 100–120 ft__ 120–200 ft __ > 200 ft

* if less than 100 ft describe the site conditions:

_____

_____

8) Wellhead construction:

X wellhead enclosed in a wellhouse

X controlled access (describe): The well is locked in a wellhouse that is monitored via telemetered security systems

__ other uses for wellhouse (describe): _____

_____

__ no wellhead control

9) Surface seal:

__ 18 ft

__ < 18 ft (no Department of Ecology approval) ('<' *means less than*)

__ < 18 ft (Approved by Ecology, include documentation)('<' *means less than*)

x > 18 ft ('>' *means greater than*)

__ depth of seal unknown

__ no surface seal

10) Annual rainfall (inches per year):

__ < 10 in/yr __ 10–25 in/yr X > 25 in/yr

PART IV: Mapping Your Ground Water Resource

1) Annual volume of water pumped: 261,984,204 (gallons)

How was this determined?

__ meter

__ estimated: __ pumping rate (_____)

__ pump capacity (_____)

X other: Water Rights shared with SPWSD Wells 7 & 8. Annual estimate based on 50% of the additional water rights shared wells 7&8 are pumped from Well 9

2) "Calculated Fixed Radius" estimate of ground water movement:
(see Instruction Packet)

6 month ground water travel time : 2,754 (ft)

1 year ground water travel time : 3,895 (ft)

5 year ground water travel time: 8,709 (ft)

10 year ground water travel time: 12,317 (ft)

Information available on length of screened/open interval?

X YES__ NO

Length of screened/open interval: 25 (ft)

3) Is there a river, lake, pond, stream, or other obvious surface water body within the 6 month time of travel boundary? X YES __ NO (mark and identify on map).

4) Is there a stormwater and/or wastewater facility, treatment lagoon, or holding pond located within the 6 month time of travel boundary? X YES __ NO (mark and identify on map).

Comments: A large stormwater infiltration gallery for Issaquah Highlands was recently installed and activated within 600 ft upgradient of District Well 9. The District has challenged a recent NPDES permit submitted by the Issaquah Highlands Developer for this facility. The District is concerned of potential groundwater contamination from this nearby stormwater injection and hopes to work with the City of Issaquah and Port Blakely (Developer) in a cooperative manner to resolve these concerns.

PART V: Assessment of Water Quality

1) Regional sources of risk to ground water:

Please indicate if any of the following are present within a circular area around your water source having a radius up to and including the five year ground water travel time:

	6 month	1 year	5 year	unknown
likely pesticide application	X			
stormwater injection wells	X		X	
other injection wells (See Comments)				
abandoned ground water well	X			
landfills, dumps, disposal areas				
known hazardous materials clean-up site				
water system(s) with known quality problems				
population density > 1 house/acre	X	X	X	
residences commonly have septic tanks	X	X		
Wastewater treatment lagoons				
sites used for land application of waste				

Mark and identify on map any of the risks listed above which are located within the 6 month time of travel boundary? (*Please include a map of the wellhead and time of travel areas with this form. Please locate and mark any of the following*.)

If other recorded or potential sources of ground water contamination exist within the ten year time of travel circular zone around your water supply, please describe:

The Lower Issaquah Valley Wellhead Protection Plan Report was prepared in November 1993 for the City of Issasquah and the Sammamish Plateau Water & Sewer District. Well 9 was not included in this report, but areas identified in the attached contaminant inventory from this report (Section 7) would be included for Well 9. SPWSD will develop a contaminant source inventory that will include Well 9's modeled capture areas and update information found in the 1993 inventory.

2) Source specific water quality records:

Please indicate the occurrence of any test results since 1986 that meet the following conditions: (Unless listed on assessment, MCLs are listed in assistance package.)

A. Nitrate: (Nitrate MCL = 10 mg/l)	YES	NO
Results greater than MCL	____	_X
< 2 mg/liter nitrate	_X _	
2–5 mg/liter nitrate	____	
> 5 mg/liter nitrate	____	
Nitrate sampling records unavailable	____	

B. VOCs: (VOC detection level 0.5 ug/l or 0.0005 mg/l.)	YES	NO
Results greater than MCL or SAL	____	_X
VOCs detected at least once	____	_X
VOCs never detected	__X_	
VOC sampling records unavailable	____	

C. EDB/DBCP:	YES	NO
(EDB MCL = 0.05 ug/l or 0.00005 mg/l. DBCP MCL = 0.2 ug/l or 0.0002 mg/l.)		
EDB/DBCP detected below MCL at least once	____	
EDB/DBCP detected above MCL at least once	____	
EDB/DBCP never detected	____	
EDB/DBCP tests required but not yet completed	____	
EDB/DBCP tests not required	_X__	

D. Other SOCs (Pesticides):	YES	NO
Other SOCs detected (pesticides and other synthetic organic chemicals)	____	_X__
Other SOC tests performed but none detected (list test methods in comments)	____	
Other SOC tests not performed	_ __	

If any SOCs in addition to EDB/DBCP were detected, please identify and date. If other SOC tests were performed, but no SOCs detected, list test methods here: _____

_____

_____

_____

E. Bacterial contamination: YES NO

Any bacterial detection(s) in the past 3 years in samples taken from the source (not distribution sampling records).....____ __X_

Has source (in past 3 years) had a bacteriological contamination problem found in distribution samples that was attributed to the source.....____ __X__

Source sampling records for bacteria unavailable ____

Part VI: Geographic or Hydrologic Factors Contributing to a Non-Circular Zone of Contribution

The following questions will help identify those ground water systems which may not be accurately represented by the calculated fixed radius (CFR) method described in Part IV. For these sources, the CFR areas should be used as a preliminary delineation of the critical time of travel zones for that source. As a system develops its Wellhead Protection Plan for theses sources, a more detailed delineation method should be considered.

1) Is there evidence of obvious hydrologic boundaries within the 10 year time of travel zone of the CFR? (Does the largest circle extend over a stream, river, lake, up a steep hillside, and/or over a mountain or ridge?)

_X_ YES ___ NO

Describe with references to map produced in Part IV:

5 and 10yr boundaries extend beyond East Fork and Main Stem of Issaquah Creek and into areas west and Northeast of the Lower Issaquah Valley that are identified as bedrock boundaries.

2) Aquifer Material:

A) Does the drilling log, well log or other geologic/engineering reports identify that the well is located in an area where the underground conditions are identified as fractured rock and/or basalt terrain?

__ YES _X_ NO

B) Does the drilling log, well log or other geologic/engineering reports indicate that the well is located in an area where the underground conditions are primarily identified as coarse sand and gravel?

_X_ YES __ NO

3) Is the source located in an aquifer with a high horizontal flow rate? (These can include sources located on flood plains of large rivers, artesian wells with high water pressure, and/or shallow flowing wells and springs.)

_X_ YES ___ NO

4) Are there other high capacity wells (agricultural, municipal and/or industrial) located within the CFRs? YES

a) Presence of ground water extraction wells removing more than approximately 500 gal/min within...

	YES	NO	unknown
< 6 month travel time	___	_X_	____
6 month–1 year travel time	_X_	___	____
1–5 year travel time	_X_	___	____
5–10 year travel time	_X__	___	____

b) Presence of ground water recharge wells (dry wells) or heavy irrigation within...

	YES	NO	unknown
< 1 year travel time	_X__	___	____
1–5 year travel time	___	___	____
5–10 year travel time	___	___	____

Please identify or describe additional hydrologic or geographic conditions that you believe may affect the shape of the zone of contribution for this source. Where possible, reference them to locations on the map produced in Part IV.

The Lower Issaquah Valley Wellhead Protection Plan Report prepared in November, 1993 for the City of Issaquah and the Sammamish Plateau Water & Sewer District and the Draft Hydrogeology of the Grand Ridge Delta (AGI, October 1997) discussed the, hydrogeology, ground water flow, and recharge area for the LIV area wells.

Based on water levels from wells completed in the LIV Groundwater and hydrogeologic interpretation, recharge is from the east (Issaquah Highlands) and from the south-southeast up the Issaquah Valley and from the East Fork Issaquah Creek Channel/Tradition Plateau.

The hydrogeologic data also indicate the prolific aquifer zones are separated by silty aquitards. These foreset beds deposited by an ancestral delta dip to the west at about 25 degrees (from horizontal). Groundwater monitoring data also show direct water level response in deeper well completion zones located west of the more easterly, shallow zone, recharge. **Figure 3** shows this relationship in a cross section (A-A') that runs East-West through groundwater monitoring wells (VT-7 and VT-8), Production Well 9, and the nearby Issaquah Highlands infiltration gallery.

Suggestions and Comments

Did you attend one of the susceptibility workshops? __ YES _X_ NO

Did you find it useful? __ YES __ NO

Did you seek outside assistance to complete the assessment? _X_ YES __ NO

- -

This form and instruction packet are still in the process of development. Your comments, suggestions and questions will help us upgrade and improve this assessment form. If you found particular sections confusing or problematic please let us know. How could this susceptibility assessment be improved or made clearer? Did the instruction package help you find the information needed to complete the assessment? How much time did it take you to complete the form? Were you able to complete the assessment without additional/outside expertise? Do you feel the assessment was valuable as a learning experience? Any other comments or constructive criticisms you have would be appreciated.

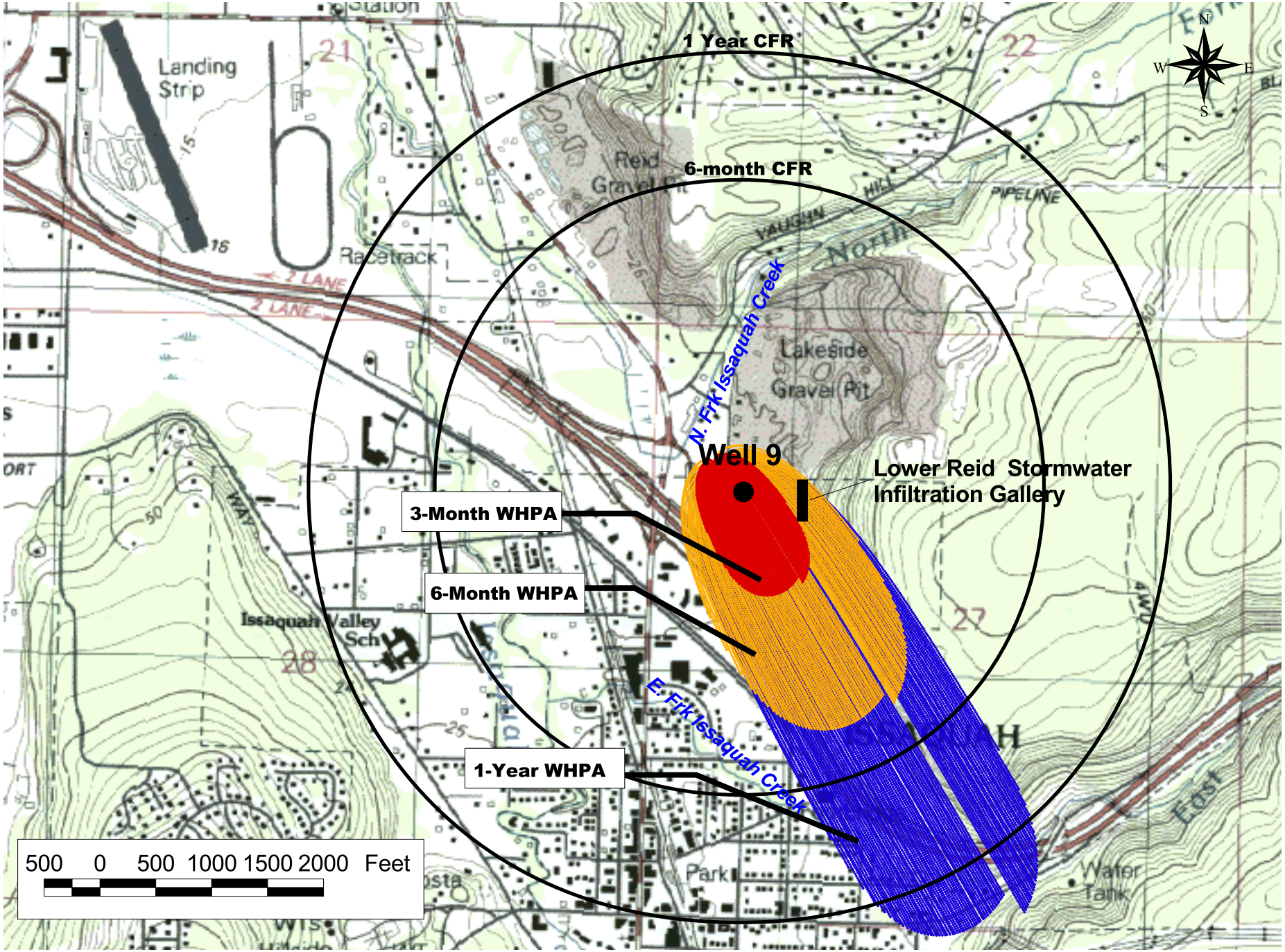

CDM

Wellhead Protection Zones for Well 9 based on EPA GPTRAC and CFR methods

Figure 1

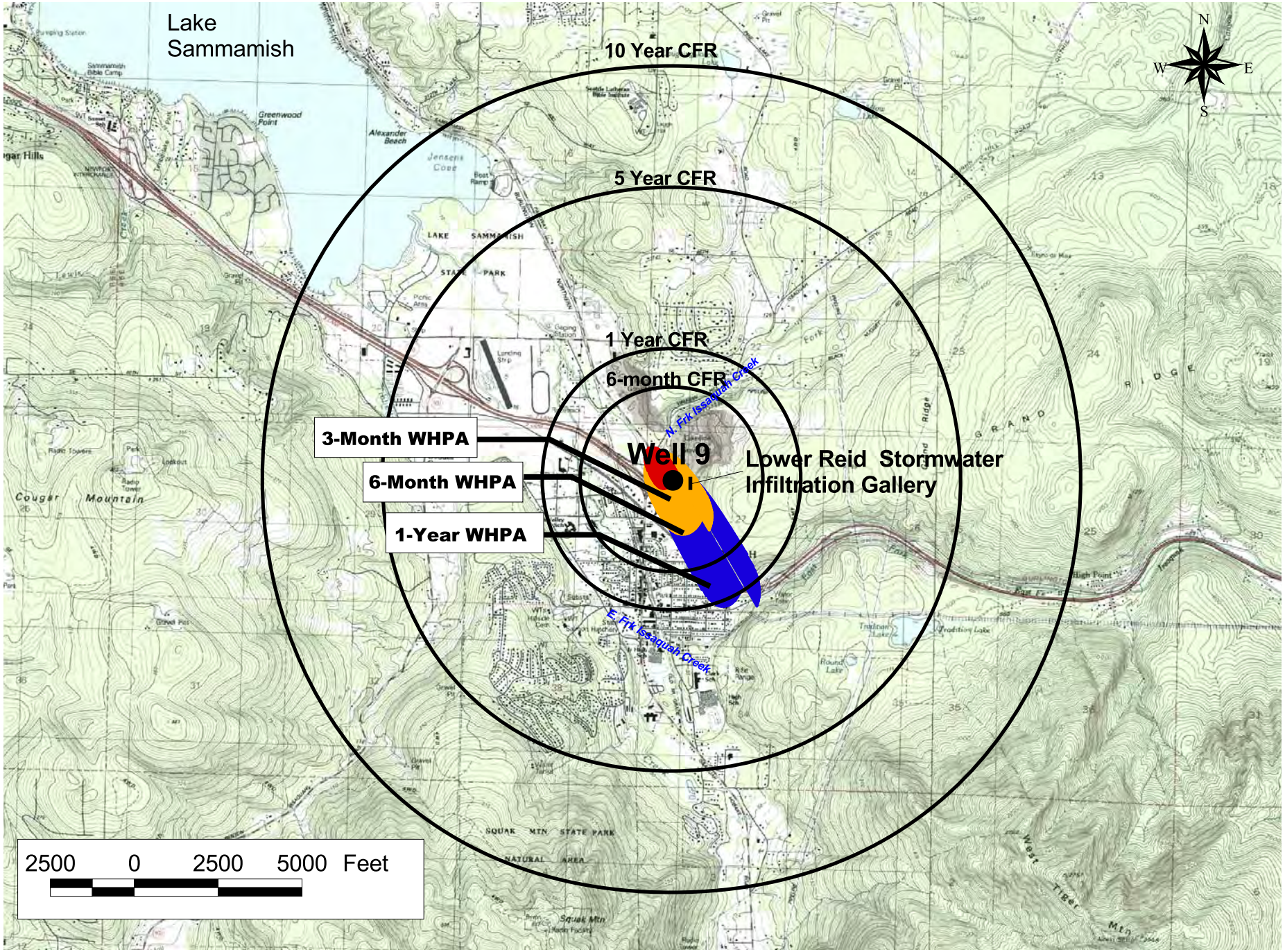

CDM

5 and 10 year Calculated Fixed Radius Areas for SPWSD Well 9

Figure 2

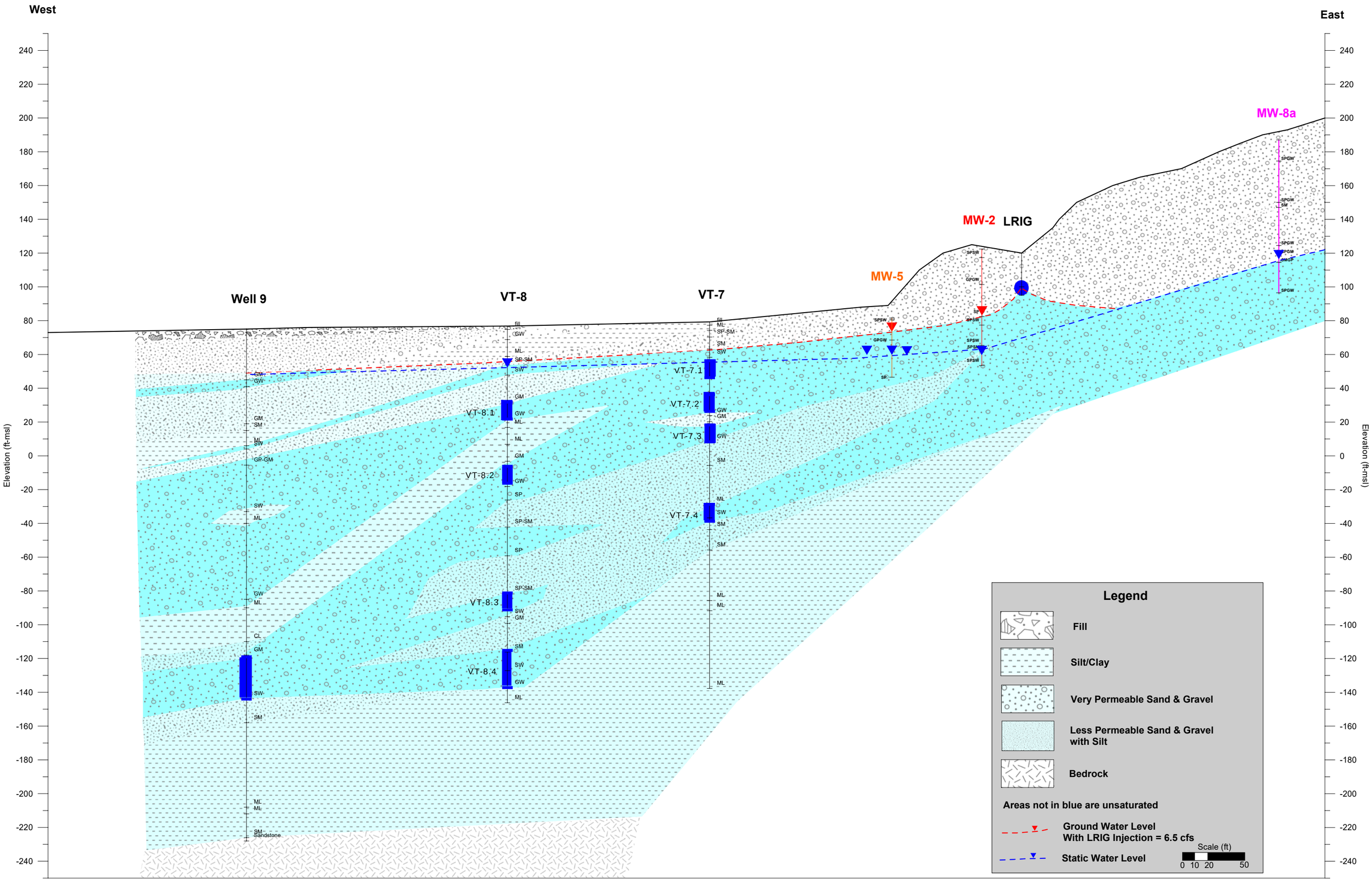
West
East
Elevation (ft-msl)
Well 9
VT-8
VT-7
MW-5
MW-2
LRIG
MW-8a
VT-8.1
VT-8.2
VT-8.3
VT-8.4
VT-7.1
VT-7.2
VT-7.3
VT-7.4
Legend
Fill
Silt/Clay
Very Permeable Sand & Gravel
Less Permeable Sand & Gravel with Silt
Bedrock
Areas not in blue are unsaturated
Ground Water Level With LRIG Injection = 6.5 cfs
Static Water Level
Scale (ft)
0 10 20 50

Figure 3

GROUND WATER CONTAMINATION
Susceptibility Assessment Survey Form

SAMMAMISH PLATEAU WATER & SEWER DISTRICT
1510 228th Avenue S.E.
Issaquah, Washington

(206) 392-6256

WELL 10

GROUND WATER CONTAMINATION
Susceptibility Assessment Survey Form

TABLE OF CONTENTS

- Susceptibility Assessment Survey Form
- Well Site Location Map
- WHPA Capture Zone Map
- Well Log
- Construction and Testing Report

Ground Water Contamination
Susceptibility Assessment Survey Form
Version 2.2

IMPORTANT! Please complete one form for each ground water source (well, wellfield, spring) used in your water system. Photocopy as necessary.

PART I: System Information

Well owner/manager : SAMMAMISH PLATEAU WATER & SEWER DISTRICT

Water system name : SAMMAMISH PLATEAU WATER & SEWER DISTRICT

County: KING

Water system number: 409009 Source number: _____

Well depth: 194 (ft.) (*From WFI form*)

Source name: WELL 10

WA well identification tag number: ___ ___ ___-___ ___ ___

_____ well not tagged

Number of connections: 10,050 Population served: 26,000

Township: 24N Range: 6E

Section: 11 1/4 1/4 Section: NE 4 SW 4

Latitude/longitude (if available): _____/_____

How was lat./long. determined?

____ global positioning device ____ survey ____ topographic map
____ other: _____

* Please refer to Assistance Packet for details and explanations of all questions in Parts II through V.

PART II: Well Construction and Source Information

1) Date well originally constructed: 8 / 24 / 83 month/day/year

last reconstruction: ___ / ___ /___ month/day/year

_____ information unavailable

2) Well driller: ARMSTRONG DRILLING
16715 66 AVENUE EAST
PUYALLUP WA. 98371

___ well driller unknown

3) Type of well:

X Drilled: ___ rotary ___ bored X cable (percussion) ___ Dug

___ Other: ___ spring(s) ___ lateral collector (Ranney)

___ driven ___ jetted ___ other: _____

Additional comments: _____

4) Well report available? X YES (attach copy to form) ___ NO

If no well log is available, please attach any other records documenting well construction; e.g. boring logs, "as built" sheets, engineering reports, well reconstruction logs.

5) Average pumping rate: 50E (gallons/min)

Source of information: WATER WELL REPORT

If not documented, how was pumping rate determined? _____

___ Pumping rate unknown

6) Is this source treated? ___ YES X NO

If so, what type of treatment:

___ disinfection ___ filtration ___ carbon filter ___ air stripper ___ other

Purpose of treatment (describe materials to be removed or controlled by treatment):

7) If source is chlorinated, is a chlorine residual maintained: ___ YES ___ NO

Residual level: _____ (*At the point closest to the source.*)

PART III: Hydrogeologic Information

1) Depth to top of open interval: [check one]

___ (less than) 20 ft ___ 20–50 ft ___ 50–100 ft X 100–200 ft ___ (greater than) 200 ft

___ information unavailable

2) Depth to ground water (static water level):

___ (less than) 20 ft ___ 20–50 ft X 50–100 ft ___ (greater than) 100 ft

___ flowing well/spring (artesian)

How was water level determined?

X well log ___ other: _____

___ depth to ground water unknown

3) If source is a flowing well or spring, what is the confining pressure: N/A

_____ psi (pounds per square inch)
or
_____ feet above wellhead

4) If source is a flowing well or spring, is there a surface impoundment, reservoir, or catchment associated with this source: ___ YES ___ NO N/A

5) Wellhead elevation (height above mean sea level): 420 (ft)

How was elevation determined? ___ topographic map X Drilling/Well Log ___ altimeter

___ other: _____

___ information unavailable

6) Confining layers: (This can be completed only for those sources with a drilling log, well log or geologic report describing subsurface conditions. Please refer to assistance package for example.)

YES evidence of a confining layer in well log

___ no evidence of a confining layer in well log

If there is evidence of a confining layer, is the depth to ground water more than 20 feet above the bottom of the lowest confining layer? X YES ___ NO

___ information unavailable

7) Sanitary setback:

___ (less than) 100 ft* ___ 100–120 ft ___ 120–200 ft ___ (greater than) 200 ft
* if less than 100 ft describe the site conditions:

_____

_____

_____

_____

8) Wellhead construction:

___ wellhead enclosed in a wellhouse

___ controlled access (describe): FENCED & LOCKED

_____

___ other uses for wellhouse (describe): _____

_____

___ no wellhead control

9) Surface seal:

___ 18 ft

___ (less than) 18 ft (no Department of Ecology approval)

___ (less than) 18 ft (Approved by Ecology, include documentation)

X (greater than) 18 ft

___ depth of seal unknown

___ no surface seal

10) Annual rainfall (inches per year):

___ (less than) 10 in/yr ___ 10–25 in/yr X (greater than) 25 in/yr

PART IV: Mapping Your Ground Water Resource

1) Annual volume of water pumped: 26 400 300 (gallons)

How was this determined?

___ meter

X estimated: X pumping rate (200 gpm)

___ pump capacity (_____)

___ other: _____

2) "Calculated Fixed Radius" estimate of ground water movement:
(see Instruction Packet)

6 month ground water travel time : 310 (ft)

1 year ground water travel time : 440 (ft)

5 year ground water travel time: 980 (ft)

10 year ground water travel time: 1390 (ft)

These are the CFR per this packet. The District has additional WHPA capture zone info for this well, which is attached. The following questions are answered for the capture zones identified on the WHPA map

Information available on length of screened/open interval?

X YES ___ NO

Length of screened/open interval: 30 (ft)

3) Is there a river, lake, pond, stream, or other obvious surface water body within the 6 month time of travel boundary? ___ YES X NO (mark and identify on map).

4) Is there a stormwater and/or wastewater facility, treatment lagoon, or holding pond located within the 6 month time of travel boundary? ___ YES X NO (mark and identify on map).

Comments: _____

PART V: Assessment of Water Quality

1) Regional sources of risk to ground water:

Please indicate if any of the following are present within a circular area around your water source having a radius up to and including the five year ground water travel time:

	6 month	1 year	5 year	unknown
likely pesticide application		✓	✓	
stormwater injection wells	NO	NO	NO	
other injection wells * SEE COMMENTS	NO	NO	NO	
abandoned ground water well				✓
landfills, dumps, disposal areas				✓
known hazardous materials clean-up site				✓
water system(s) with known quality problems				✓
population density (greater than) 1 house/acre	NO	NO	NO	
residences commonly have septic tanks	✓	✓	✓	
Wastewater treatment lagoons	NO	NO	NO	
sites used for land application of waste	NO	NO	NO	

Mark and identify on map any of the risks listed above which are located within the 6 month time of travel boundary? *(Please include a map of the wellhead and time of travel areas with this form. Please locate and mark any of the following.)*

If other recorded or potential sources of ground water contamination exist within the ten year time of travel circular zone around your water supply, please describe:

* WELL 12 (AS SHOWN ON THE WHPA CAPTURE ZONE MAP) HAS BEEN USED AS AN INJECTION WELL AS PART OF A GROUNDWATER RECHARGE PROJECT, WITH DRINKING QUALITY WATER.

2) Source specific water quality records:

Please indicate the occurrence of any test results since 1986 that meet the following conditions: (Unless listed on assessment, MCLs are listed in assistance package.)

A. Nitrate: (Nitrate MCL = 10 mg/l)	YES
Results greater than MCL	____
(less than) 2 mg/liter nitrate	____
2–5 mg/liter nitrate	____
(greater than) 5 mg/liter nitrate	____
Nitrate sampling records unavailable	____

B. VOCs: (VOC detection level 0.5 ug/l or 0.0005 mg/l.)	YES
Results greater than MCL or SAL	____
VOCs detected at least once	____
VOC test performed but never detected	____
VOC sampling records unavailable	____

C. EDB/DBCP:	YES
(EDB MCL = 0.05 ug/l or 0.00005 mg/l. DBCP MCL = 0.2 ug/l or 0.0002 mg/l.)	
EDB/DBCP detected below MCL at least once	____
EDB/DBCP detected above MCL at least once	____
EDB/DBCP never detected	____
EDB/DBCP tests required but not yet completed	____
EDB/DBCP tests not required	____

D. Other SOCs (pesticides and other synthetic organic chemicals):	YES
Other SOCs detected	____
Other SOC tests performed but none detected *	____
Other SOC tests not performed	____

*If any SOCs in addition to EDB/DBCP were detected, please identify and date. If other SOC tests were performed, but no SOCs detected, list test methods here: _____

THE TEST RESULTS RECENTLY PERFORMED ON WELL 10 ARE ENCLOSED. THIS WELL JUST RECENTLY WENT ON-LINE

E. Bacterial contamination:

	YES
Any bacterial detection(s) in the past 3 years in samples taken from the source (not distribution sampling records).	N/A
Has source (in past 3 years) had a bacteriological contamination problem found in distribution samples that was attributed to the source.	___
Source sampling records for bacteria unavailable	___

Part VI: Geographic or Hydrologic Factors Contributing to a Non-Circular Zone of Contribution

The following questions will help identify those ground water systems which may not be accurately represented by the calculated fixed radius (CFR) method described in Part IV. For these sources, the CFR areas should be used as a preliminary delineation of the critical time of travel zones for that source. As a system develops its Wellhead Protection Plan for theses sources, a more detailed delineation method should be considered.

1)Is there evidence of obvious hydrologic boundaries within the 10 year time of travel zone of the CFR? (Does the largest circle extend over a stream, river, lake, up a steep hillside, and/or over a mountain or ridge?)

X YES ___ NO

Describe with references to map produced in Part IV:

THERE ARE STREAMS FLOWING INTO AND OUT OF YELLOW LAKE WHICH IS IN THE ONE YEAR BOUNDARY. THERE IS A STEEP RAVINE REDUCING SOUTHERN BOUNDARY OF THE FIVE AND TEN YEAR PLHC.

2) Aquifer Material:

A) Does the drilling log, well log or other geologic/engineering reports identify that the well is located in an area where the underground conditions are identified as fractured rock and/or basalt terrain?

___ YES X NO

B) Does the drilling log, well log or other geologic/engineering reports indicate that the well is located in an area where the underground conditions are primarily identified as coarse sand and gravel?

X YES ___ NO

3) Is the source located in an aquifer with a high horizontal flow rate? (These can include sources located on flood plains of large rivers, artesian wells with high water pressure, and/or shallow flowing wells and springs.)

___ YES ___ NO

4) Are there other high capacity wells (agricultural, municipal and/or industrial) located within the CFRs?

a) Presence of ground water extraction wells removing more than approximately 500 gal/min within...

	YES	NO	unknown
6 month travel time	___	___	___
6 month–1 year travel time	___	___	___
1–5 year travel time	___	___	___
5–10 year travel time	___	___	___

b) Presence of ground water recharge wells (dry wells) or heavy irrigation within...

	YES	NO	unknown
1 year travel time	___	___	___
1–5 year travel time	___	___	___
5–10 year travel time	___	___	___

Please identify or describe additional hydrologic or geographic conditions that you believe may affect the shape of the zone of contribution for this source. Where possible, reference them to locations on the map produced in Part IV.

_____

_____

_____

_____

_____

_____

_____

_____

Suggestions and Comments

Did you attend one of the susceptibility workshops? ___ YES ___ NO

Did you find it useful? ___ YES ___ NO

Did you seek outside assistance to complete the assessment? ___ YES ___ NO

. . . .

This form and instruction packet are still in the process of development. Your comments, suggestions and questions will help us upgrade and improve this assessment form. If you found particular sections confusing or problematic please let us know. How could this susceptibility assessment be improved or made clearer? Did the instruction package help you find the information needed to complete the assessment? How much time did it take you to complete the form? Were you able to complete the assessment without additional/outside expertise? Do you feel the assessment was valuable as a learning experience? Any other comments or constructive criticisms you have would be appreciated.

FIGURE 1

SAMMAMISH PLATEAU WATER & SEWER DISTRICT

WELL SITE LOCATION MAP

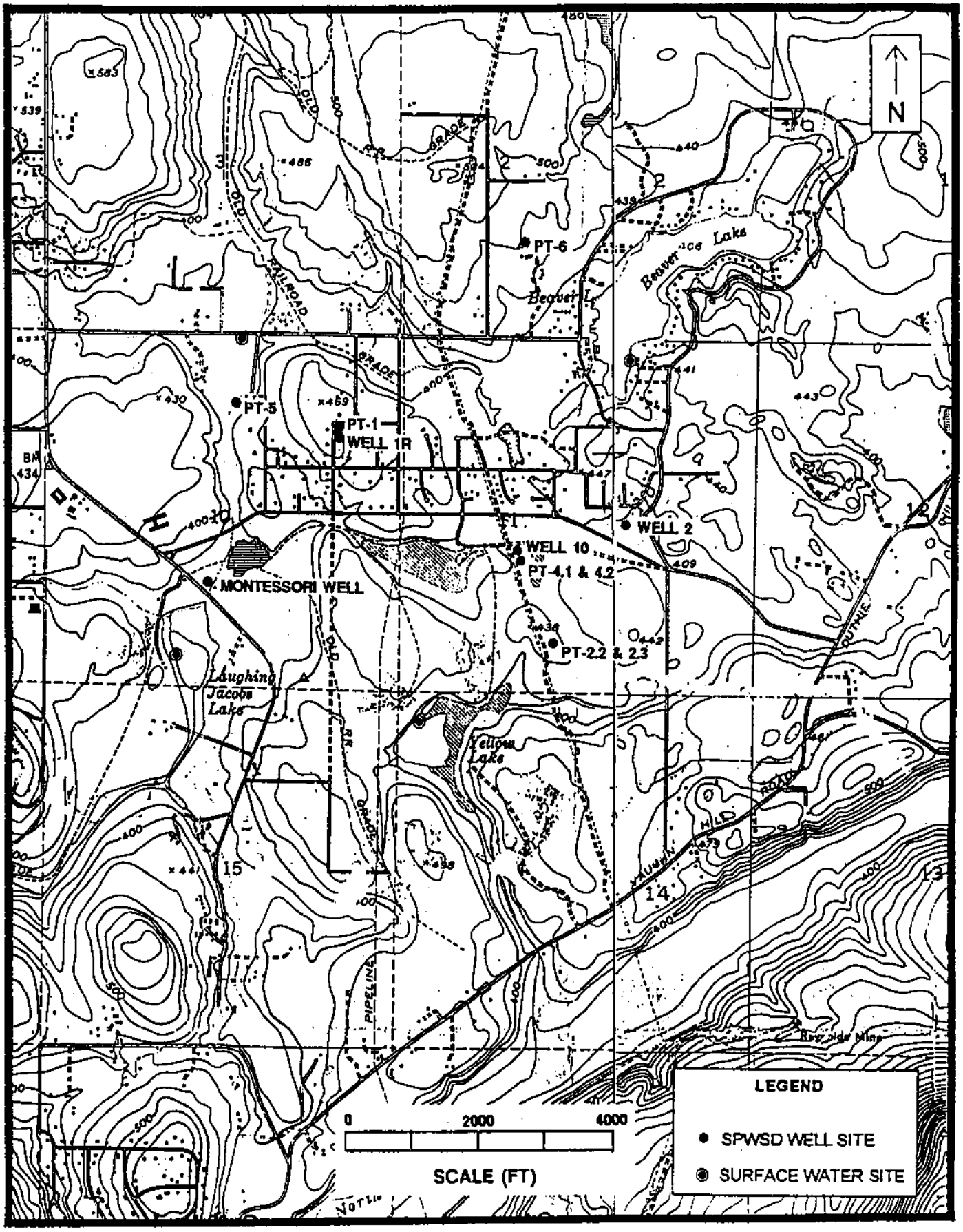

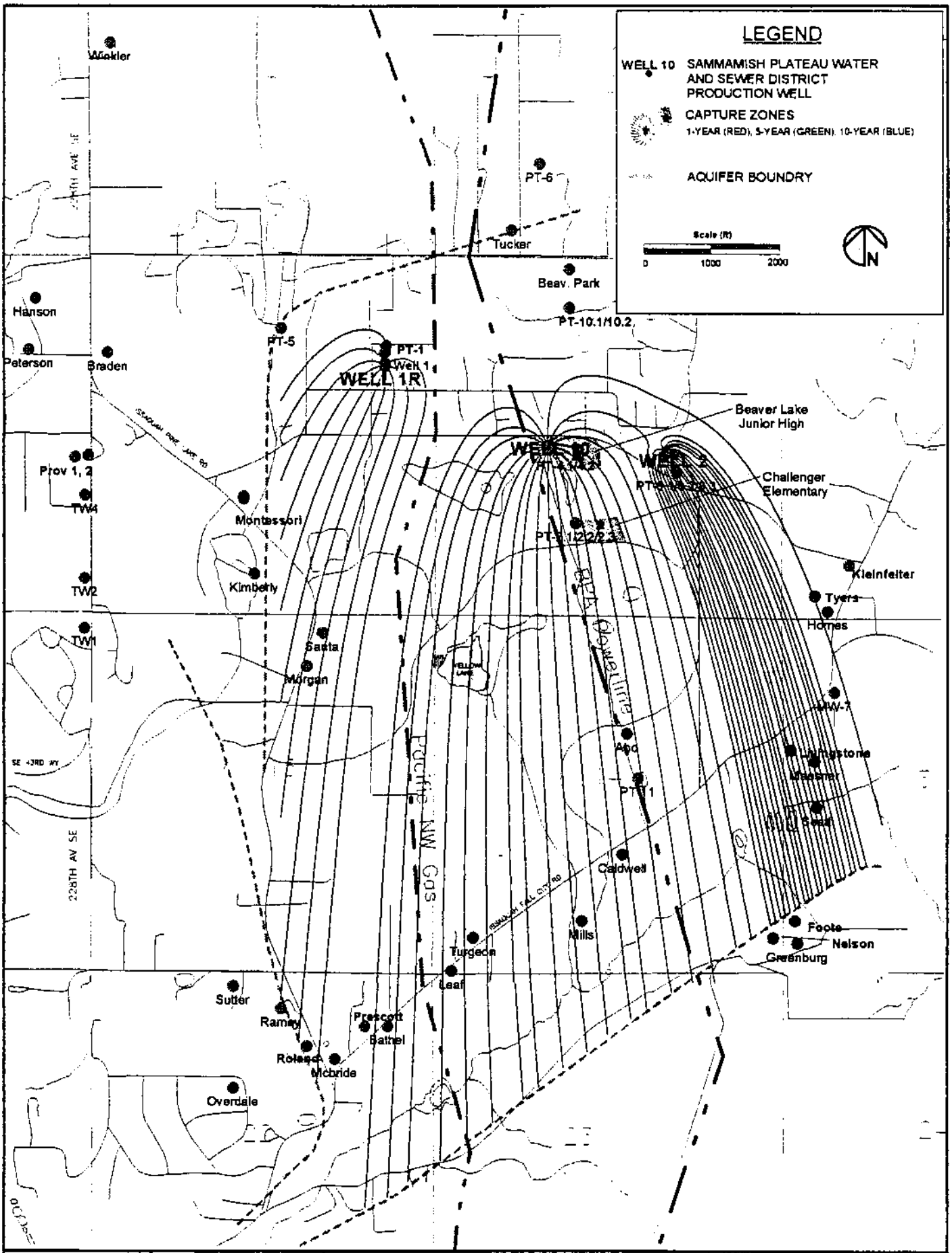

AGI TECHNOLOGIES	Sammamish Plateau Water and Sewer District Wellhead Protection Project # - 15287.015	Distribution of Plateau Aquifer Zone II Wellhead Protection Areas	Figure 1-1

File Original and First Copy with Department of Ecology
Second Copy—Owner's Copy
Third Copy—Driller's Copy

WATER WELL REPORT

STATE OF WASHINGTON

Start Card No. 062368

Water Right Permit No. G1-27166

(1) OWNER: Name Sammamish Plateau Water Dist. Address 1510 228th Ave SE, Issaquah, WA 98

(2) LOCATION OF WELL: County King NE ¼ SW ¼ Sec 11 T 24 N, R 6E W.M.

(2a) STREET ADDRESS OF WELL (or nearest address)

(3) PROPOSED USE: ☐ Domestic ☐ Irrigation ☐ DeWater ☐ Industrial ☐ Test Well ☒ Municipal ☒ Other ☐

(4) TYPE OF WORK: Owner's number of well (if more than one) 10

Abandoned ☐ New well ☒ Deepened ☐ Reconditioned ☐ Method: Dug ☐ Cable ☒ Rotary ☐ Bored ☐ Driven ☐ Jetted ☐

(5) DIMENSIONS: Diameter of well 12 inches.
Drilled 194 feet. Depth of completed well 193 ft.

(6) CONSTRUCTION DETAILS:
Casing installed: 12" Diam. from +2.5 ft. to 135 ft.
Welded ☒ Diam. from ft. to ft.
Liner installed ☐ Diam. from ft. to ft.
Threaded ☐ Diam. from ft. to ft.

Perforations: Yes ☐ No ☒
Type of perforator used
SIZE of perforations in. by in.
perforations from ft. to ft.
perforations from ft. to ft.
perforations from ft. to ft.

Screens: Yes ☒ No ☐
Manufacturer's Name
Type 304 Stainless Model No.
Diam. 10" Slot size 0.030 from 135 ft. to 155 ft.
Diam. Slot size from 173 ft. to 183 ft.

Gravel packed: Yes ☐ No ☒ Size of gravel
Gravel placed from ft. to ft.

Surface seal: Yes ☒ No ☐ To what depth? 65 ft.
Material used in seal Bent/Grvl 65-55;Cmnt 55-0
Did any strata contain unusable water? Yes ☐ No ☒
Type of water? Depth of strata
Method of sealing strata off

(7) PUMP: Manufacturer's Name
Type H.P.

(8) WATER LEVELS: Land-surface elevation above mean sea level Approx 420 ft.
Static level 67.23 BGS ft. below top of well Date 8/23/93
Artesian pressure lbs. per square inch Date
Artesian water is controlled by (Cap, valve, etc.)

(9) WELL TESTS: Drawdown is amount water level is lowered below static level
Was a pump test made? Yes ☒ No ☐ If yes, by whom? Carr/AGI
Yield: 508 gal./min. with 38 ft. drawdown after 24 hrs.

Recovery data (time taken as zero when pump turned off) (water level measured from well top to water level)

Time	Water Level	Time	Water Level	Time	Water Level
1	79.20	10	83.27	30	80.30
2	83.00	15	82.36	60	77.70
5	84.37	20	81.58	90	76.07

Date of test 8/24-25/93
Bailer test gal./min. with ft. drawdown after hrs.
Airtest gal./min. with stem set at ft. for hrs.
Artesian flow g.p.m. Date
Temperature of water 8°C Was a chemical analysis made? Yes ☐ No ☐

(10) WELL LOG or ABANDONMENT PROCEDURE DESCRIPTION

Formation: Describe by color, character, size of material and structure, and show thickness of aquifers and the kind and nature of the material in each stratum penetrated, with at least one entry for each change of information.

MATERIAL	FROM	TO
Topsoil	0	5
Sand & Gravel, gray-tan, cmnt	5	34
Sand & Gravel, Loose, dry	34	36
Till, Cemented Silt & Cbls	36	70
Sand, brown, claybound	70	75
Sand & Grvl, Brn-Gry, W-B	75	97
Clay w/sand, bluish-gry, lean	97	123
Sandy Gravel, olive-gry, W-B	123	160
Silt w/peat & grvl, olive-gry	160	169
Grvl w/sand-peat-silt, ol-gry	169	175
Sabd w/silt, grvly, olive-blk	175	193

Work started 7/5/93, 19. Completed 8/26, 19 93

WELL CONSTRUCTOR CERTIFICATION:

I constructed and/or accept responsibility for construction of this well, and its compliance with all Washington well construction standards. Materials used and the information reported above are true to my best knowledge and belief.

NAME Armstrong Drilling, Inc. (PERSON, FIRM, OR CORPORATION) (TYPE OR PRINT)
Address 10715 66th Avenue East Puyallup, WA 98371
(Signed) [signature] (WELL DRILLER) License No. 0012
Contractor's Registration No. ARMSTDI136NC Date 9-15 19 93

(USE ADDITIONAL SHEETS IF NECESSARY)

ECY 050-1-20 (10/87) 1329

Carr/Associates
A Division of Applied Geotechnology Inc.

PRODUCTION WELL 10

CONSTRUCTION AND TESTING REPORT

SAMMAMISH PLATEAU WATER & SEWER DISTRICT

SUMMARY

Sammamish Plateau Water & Sewer District Well 10 is capable of producing 550 gpm continuously from a pumping level of 130 feet below ground surface. The well is completed in the lower part of the Plateau Aquifer. Screens are set from 135 to 155 and 173 to 183 feet below ground surface. Water levels of wells completed in the lower part of the Plateau Aquifer (PT-4.2, PT-5, PT-6, and Montessori School Well) reflected this pumping test of Well 10. Water levels in wells completed in the upper part of the Plateau Aquifer (PT-4.1, PT-1, and Well 2) showed little or no influence from pumping of Well 10. Surface waters in the surrounding area showed no changes in water levels due to the aquifer test.

Water quality samples from Well 10 show all parameters meet Washington State Department of Health water quality standards.

BACKGROUND

Property owner:	Issaquah School District
Hydrogeologist:	Carr/Associates, a Division of AGI; Eric Semsak
Drilling contractor:	Armstrong Drilling, Inc.
Drilling method:	Cable tool
Start date:	July 5,1993
Completion date:	August 26, 1993

P.O. Box 1158 Gig Harbor, WA 98335 FAX 206/858-6007 Telephone 206/851-5562

PERMITS AND APPLICATIONS

Copies of the water right application and preliminary permit are included in the Appendix.

Start card number:	62368
Water right application number:	G1-21766
Application submitted:	May 4, 1993
Instantaneous:	500 gpm
Annual:	200 af/yr
Continuous equivalent:	124 gpm

DRILLING OBJECTIVE

The objective of this project was to supply additional ground water resources to augment the District's existing supply for future demands of a growing community.

Desired yield:	500 gpm
Target aquifer:	Plateau Aquifer
Required quality:	Potable

WELL SITE

The well site, illustrated in **Figure 1**, is located in the northwest corner of Issaquah School District's new middle school property, approximately 115 feet south of Southeast 32nd Street at about 251st Avenue Southeast. The site lies adjacent to the northwestern portion of the school's parking lot and east of the Bonneville Power transmission lines.

Map location/coordinates:	T24N/R6E/NE4SW4, Section 11
County:	King
Top of 12-inch casing elevation:	Approximately 420 ft.
Site characteristics:	Flat-lying site bordering the Issaquah Middle School's parking lot and the Bonneville Power transmission lines
Ground surface elevation:	418.37

COMPLETION RECORD

Well 10 is completed in accordance with WAC Chapter 173-160, effective May 5, 1988, and meets all requirements for a State of Washington, Group A public supply well.

The well completion record is illustrated in **Figure 2** and described in the Water Well Report (Form ECY 050-1-20) in the Appendix.

Total depth drilled:	194 ft.
Completion depth:	193 ft.

Surface Seal

Depth of seal:	65 ft.
Type of seal:	0 to 55 ft., cement; 55 to 65 ft., alternating layers of bentonite & gravel

Casing Record

Casing Depth	Diameter	Description
0 to 135 ft.	12-inch	mild-steel casing

Screen Assembly

Continuous wrap, wire-wound, welded, type 304 stainless-steel, well screens manufactured by Johnson Division were installed as listed below:

Screen Depth	Diameter	Description
130 to 135 ft.	10-inch ID	riser, mild-steel casing with two Figure "K" Neoprene packers
135 to 155 ft.	10-inch ID	type 304 stainless-steel screen (0.030-inch slot)
155 to 173 ft.	10-inch ID	blank mild-steel casing
173 to 183 ft.	10-inch ID	type 304 stainless-steel screen (0.030-inch slot)
183 to 193 ft.	10-inch ID	tailpipe, mild-steel casing

HYDROGEOLOGIC LOG

The hydrogeologic log is illustrated in **Figure 3** and described in the Water Well Report in the Appendix.

At Well 10, the upper 70-foot layer of sediments is glacial till comprised of low permeable, gray-tan silt, sand, and gravel. Between depths of 34 and 36 feet, a thin glacial outwash unit consisting of dry, loose sand and gravel bisects the upper 70 feet of till. A brown, claybound sand unit separates the overlying till from the upper water-bearing zone of the Plateau Aquifer. This zone lies between depths of 75 and 97 feet and consists of brown to gray, coarse sand and gravel with some silt. Beneath this aquifer zone, an impermeable, bluish-gray clay unit was encountered between depths of 97 and 123 feet. This sandy clay separates the upper and lower water-bearing zones of the Plateau Aquifer. At this site, the lower Plateau Aquifer (123 to 193 feet) is bisected by a 9-foot layer of silt and peat (160 to 169 feet). Above this silt, the lower aquifer appears to be more permeable. Below it, permeabilities tend to decrease with depth.

FIGURE 2

SAMMAMISH PLATEAU WATER & SEWER DISTRICT

WELL 10

COMPLETION DETAILS

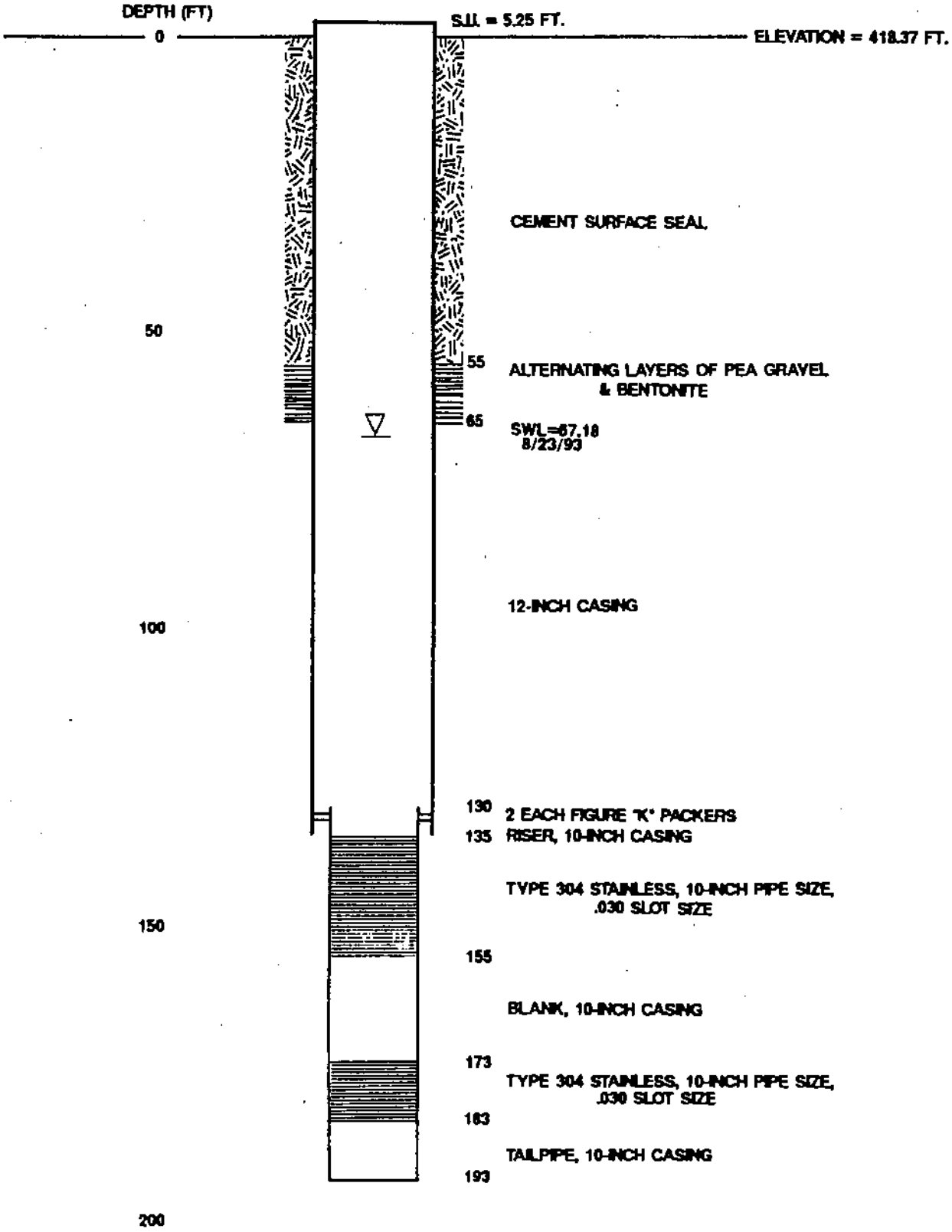

SOUND ANALYTICAL SERVICES, INC.

Carr/Associates
Project: SPWSD Well 10
Lab No. 34339

September 7, 1993

Lab Sample No. 34339-1 Client ID: Well 10

EPA Method 524.2 (continued)

TRIHALOMETHANES (THM)

EPA Code No.	Compound Name	Concentration ug/L	PQL	Flags
2941	Chloroform	ND	0.5	
2943	Bromodichloromethane	ND	0.5	
2944	Dibromochloromethane	ND	0.5	
2942	Bromoform	ND	0.5	

ND - Not Detected
PQL - Practical Quantitation Limit

Volatile Surrogates

Surrogate	Percent Recovery	Control Limits
4-Bromofluorobenzene	96	80 - 120
1,2 Dichlorobenzene d4	93	70 - 130

Continued . . . . .

Th report is issued solely for the use of the person or company to whom it is addressed. This laboratory accepts responsibility only for the due performance of analysis in accordance with in try acceptable practice. In no event shall Sound Analytical Services, Inc. or its employees be responsible for consequential or special damages in any kind or in any amount.

SOUND ANALYTICAL SERVICES, INC.

Carr/Associates
Project: SPWSD Well 10
Lab No. 34339

September 7, 1993

Lab Sample No. 34339-1 Client ID: Well 10

INORGANIC PARAMETERS	RESULT	MCL
Antimony(GFAA), mg/L	< 0.006	0.006
Arsenic (GFAA), mg/L	< 0.01	0.05
Barium, mg/L	< 0.005	2.0
Beryllium, mg/L	< 0.004	0.004
Cadmium, mg/L	< 0.005	0.005
Chromium, mg/L	0.01	0.1
Copper, mg/L	< 0.025	1.0
Iron, mg/L	< 0.1	0.3
Lead (GFAA), mg/L	< 0.003	0.05
Manganese, mg/L	< 0.015	0.05
Mercury (CVAA), mg/L	< 0.0002	0.002
Nickel, mg/L	< 0.04	0.1
Selenium (GFAA), mg/L	< 0.005	0.05
Silver, mg/L	< 0.01	0.1
Sodium, mg/L	3.5	N/A
Thallium (GFAA), mg/L	< 0.002	0.002
Zinc, mg/L	< 0.2	5.0
Fluoride, mg/L	< 0.1	2.0
Nitrate Nitrogen, mg/L	0.05	10.0
Chloride, mg/L	1.4	250
Sulfate, mg/L	2.8	250
Cyanide, mg/L	< 0.05	0.2
Turbidity, NTU	< 0.1	1
Hardness (as $CaCO_3$) mg/L	30	N/A
Conductivity, umhos/cm	77	700
Color, Color Units	< 5	15.0
Total Dissolved Solids, mg/L	49	500

MCL - Maximum Contaminant Level
N/A - Not Applicable
< - Less than practical quantitation limit

This report is issued solely for the use of the person or company to whom it is addressed. This laboratory accepts responsibility only for the due performance of analysis in accordance with ...try acceptable practice. In no event shall Sound Analytical Services, Inc. or its employees be responsible for consequential or special damages in any kind or in any amount.

SOUND ANALYTICAL SERVICES, INC.

SPECIALIZING IN INDUSTRIAL & TOXIC WASTE ANALYSIS

4813 PACIFIC HIGHWAY EAST, TACOMA, WASHINGTON 98424 - TELEPHONE (206) 922-2310 - FAX (206) 922-5047

QUALITY CONTROL REPORT

General Chemistry

Client: Carr/Associates
Lab No: 34339qc1
Matrix: Water
Units: mg/L
Date: September 7, 1993

METHOD BLANKS

Parameter	Result	PQL
Fluoride, mg/L	ND	0.1
Chloride, mg/L	ND	1.0
Nitrate Nitrogen, mg/L	ND	0.05
Nitrite Nitrogen, mg/L	ND	0.05
Sulfate, mg/L	ND	1.0
Cyanide, mg/L	ND	0.05
Total Dissolved Solids, mg/L	ND	2
Turbidity, NTU	ND	0.1
Hardness (as $CaCO_3$), mg/L	ND	2
Conductivity, umhos/cm	ND	10
Color, color units	ND	5

ND - Not Detected
PQL - Practical Quantitation Limit

DUPLICATE

Dup No. 34339-1

Parameter	Sample(S)	Duplicate(D)	RPD
Total Dissolved Solids	49	46	6.3

RPD = Relative Percent Difference
= [(S - D) / ((S + D) / 2)] x 100

Th eport is issued solely for the use of the person or company to whom it is addressed. This laboratory accepts responsibility only for the due performance of analysis in accordance with ry acceptable practice. In no event shall Sound Analytical Services, Inc. or its employees be responsible for consequential or special damages in any kind or in any amount.

SOUND ANALYTICAL SERVICES, INC.

SPECIALIZING IN INDUSTRIAL & TOXIC WASTE ANALYSIS

4813 PACIFIC HIGHWAY EAST, TACOMA, WASHINGTON 98424 - TELEPHONE (206)922-2310 - FAX (206)922-5047

QUALITY CONTROL REPORT

ORGANIC COMPOUNDS IN DRINKING WATER
EPA METHOD 524.2

Client: Carr/Associates
Lab No: 34339qc2
Units: ug/L
Date: September 7, 1993

METHOD BLANK

REGULATED COMPOUNDS

EPA Code No.	Compound Name	Result	PQL	Flags
2976	Vinyl Chloride	ND	1.0	
2977	1,1-Dichloroethene	ND	0.5	
2981	1,1,1-Trichloroethane	ND	0.5	
2982	Carbon Tetrachloride	ND	0.5	
2990	Benzene	ND	0.5	
2980	1,2-Dichloroethane	ND	0.5	
2984	Trichloroethene	ND	0.5	
2969	1,4-Dichlorobenzene	ND	0.5	
2964	Methylene Chloride	ND	0.5	
2979	trans-1,2-Dichloroethene	ND	0.5	
2380	Cis-1,2-Dichloroethene	ND	0.5	
2983	1,2-Dichloropropane	ND	0.5	
2991	Toluene	ND	0.5	
2985	1,1,2-Trichloroethane	ND	0.5	
2987	Tetrachloroethene	ND	0.5	
2989	Chlorobenzene	ND	0.5	
2992	Ethylbenzene	ND	0.5	
2995	Meta-Xylene, para-Xylene	ND	0.5	
2997	ortho-xylene	ND	0.5	
2996	Styrene	ND	0.5	
2968	1,2-Dichlorobenzene	ND	0.5	
2378	1,2,4-Trichlorobenzene	ND	0.5	

ND - Not Detected
PQL - Practical Quantitation Limit

Th eport is issued solely for the use of the person or company to whom it is addressed. This laboratory accepts responsibility only for the due performance of analysis in accordance with ir ry acceptable practice. In no event shall Sound Analytical Services, Inc. or its employees be responsible for consequential or special damages in any kind or in any amount.

SOUND ANALYTICAL SERVICES, INC.

QUALITY CONTROL REPORT

ORGANIC COMPOUNDS IN DRINKING WATER EPA METHOD 524.2

Client: Carr/Associates
Lab No: 34339qc2
Units: ug/L
Date: September 7, 1993

METHOD BLANK

UNREGULATED COMPOUNDS

EPA Code No.	Compound Name	Result	PQL	Flags
2212	Dichlorodifluoromethane	ND	1.0	
2210	Chloromethane	ND	1.0	
2214	Bromomethane	ND	1.0	
2218	Trichlorofluoromethane	ND	1.0	
2216	Chloroethane	ND	1.0	
2978	1,1-Dichloroethane	ND	0.5	
2416	2,2-Dichloropropane	ND	0.5	
2430	Bromochloromethane	ND	0.5	
2410	1,1-Dichloropropene	ND	0.5	
2408	Dibromomethane	ND	0.5	
2412	1,3-Dichloropropane	ND	0.5	
2986	1,1,1,2-Tetrachloroethane	ND	0.5	
2994	Isopropylbenzene	ND	0.5	
2993	Bromobenzene	ND	0.5	
2988	1,1,2,2-Tetrachloroethane	ND	0.5	
2414	1,2,3-Trichloropropane	ND	0.5	
2998	n-Propylbenzene	ND	0.5	
2965	2-Chlorotoluene	ND	0.5	
2966	4-Chlorotoluene	ND	0.5	
2424	1,3,5-Trimethylbenzene	ND	0.5	
2426	t-Butylbenzene	ND	0.5	
2418	1,2,4-Trimethylbenzene	ND	0.5	
2428	sec-Butylbenzene	ND	0.5	
2967	1,3-Dichlorobenzene	ND	0.5	
2030	4-Isopropyltoluene	ND	0.5	
2422	n-Butylbenzene	ND	0.5	
2246	Hexachlorobutadiene	ND	0.5	
2248	Naphthalene	ND	0.5	
2420	1,2,3-Trichlorobenzene	ND	0.5	

ND - Not Detected PQL - Practical Quantitation Limit

report is issued solely for the use of the person or company to whom it is addressed. This laboratory accepts responsibility only for the due performance of analysis in accordance with quality acceptable practice. In no event shall Sound Analytical Services, Inc. or its employees be responsible for consequential or special damages in any kind or in any amount.

SOUND ANALYTICAL SERVICES, INC.

QUALITY CONTROL REPORT

ORGANIC COMPOUNDS IN DRINKING WATER
EPA METHOD 524.2

Client: Carr/Associates
Lab No: 34339qc2
Units: ug/L
Date: September 7, 1993

METHOD BLANK

TRIHALOMETHANES (THM)

EPA Code No.	Compound Name	Result	PQL	Flags
2941	Chloroform	ND	0.5	
2943	Bromodichloromethane	ND	0.5	
2944	Dibromochloromethane	ND	0.5	
2942	Bromoform	ND	0.5	

ND - Not Detected
PQL - Practical Quantitation Limit

Volatile Surrogates

Surrogate	Percent Recovery	Control Limits
4-Bromofluorobenzene	97	80 - 120
1,2 Dichlorobenzene d4	92	70 - 130

Tl eport is issued solely for the use of the person or company to whom it is addressed. This laboratory accepts responsibility only for the due performance of analysis in accordance with it try acceptable practice. In no event shall Sound Analytical Services, Inc. or its employees be responsible for consequential or special damages in any kind or in any amount.

SOUND ANALYTICAL SERVICES, INC.

SPECIALIZING IN INDUSTRIAL & TOXIC WASTE ANALYSIS

4813 PACIFIC HIGHWAY EAST, TACOMA, WASHINGTON 98424 - TELEPHONE (206)922-2310 - FAX (206)922-5047

QUALITY CONTROL REPORT

Total Metals

Client: Carr/Associates
Lab No: 34339qc3
Units: mg/L
Date: September 7, 1993

METHOD BLANK

Parameter	Result	PQL
Antimony	ND	0.006
Arsenic	ND	0.01
Barium	ND	0.005
Beryllium	ND	0.004
Cadmium	ND	0.005
Chromium	ND	0.01
Copper	ND	0.025
Iron	ND	0.1
Lead	ND	0.003
Mercury	ND	0.0002
Manganese	ND	0.015
Nickel	ND	0.04
Selenium	ND	0.005
Silver	ND	0.01
Sodium	ND	0.50
Thallium	ND	0.002
Zinc	ND	0.2

ND - Not Detected
PQL - Practical Quantitation Limit

This report is issued solely for the use of the person or company to whom it is addressed. This laboratory accepts responsibility only for the due performance of analysis in accordance with ir ry acceptable practice. In no event shall Sound Analytical Services, Inc. or its employees be responsible for consequential or special damages in any kind or in any amount.

. lease Print Plainly

E HEAVY PENCIL

STATE OF WASHINGTON
DEPARTMENT OF HEALTH
PUBLIC HEALTH LABORATORIES
OFFICE OF RADIATION LABORATORIES
1610 N.E. 150TH ST., SEATTLE, WA 98155-7224

WATER SAMPLE INFORMATION FOR RADIATION ANALYSES

B NUMBER	SYSTEM NAME:	SYSTEM I.D. NO.	SYSTEM CLASS (circle one)	SOURCE NUMBER
1 0 1 0 4 3 2 2	Comm. Plateau Water/Sewer Dist	4 0 5 1 0 2	A B	0 E 7

this follow up of a previous out of compliance sample? Yes ☐ No ☐

COUNTY: KING

If yes, what was the laboratory number of the previous sample? _ _ _ _ _ _ _

SOURCE TYPE: ___ 1. SURFACE X 3. WELL ___ 2. SPRING ___ 4. PURCHASE

IF SOURCE IS LAKE OR STREAM, ENTER NAME: WELL 10

IF SAMPLE WAS DRAWN FROM DISTRIBUTION SYSTEM IT WAS COLLECTED FROM SYSTEM AT: (ADDRESS)

DATE OF FINAL REPORT: 2/ 2/92

	DATE COLLECTED	DATE RECEIVED
1	08/25/93	08/26/93

SEND REPORT TO: (PRINT FULL NAME & ADDRESS)

CARR & ASSOCIATES
NAME

P. O. BOX 1196
STREET

Gig Harbor WA 98329
CITY ZIP CODE

TELEPHONE (206) 851-[illegible]
AREA CODE

LABORATORY REPORT
(DO NOT WRITE BELOW THIS LINE)

ANALYSES	LESS THAN	RESULTS pCi/L	*MCL pCi/L	COMPLIANCE YES	COMPLIANCE NO	CHEMIST INITIALS
Gross Alpha	<	2.0		✓		[illegible]
Uranium		.				
Gross Alpha minus Uranium		.	15			
Radium-226		.	3			
Radium-228		.				
Radium-226 Plus Radium-228		.	5			
Radon-222						
Gross Beta	<	2.0	50	✓		[illegible]
Strontium-89		.	80			
Strontium-90		.	8			
Cesium-134		.	80			
Iodine-131		.	3			
Tritium		.	20,000			

LABORATORY SUPERVISOR (Name or Initials): [illegible]

QUALITY ASSURANCE SUPERVISOR (Name or Initials): [illegible]

CHARGE: $72.00

REMARKS:

*MCL is the maximum contaminant Level Allowed

DOH 306-001 (Rev. 3/90) 68

DISTRIBUTION: White — Laboratory & Data Processing Green — Billing Yellow — Water Supplier Pink — Engineer Office Gold — District Engineer

WATER MANAGEMENT LABS
1515 80TH STREET E
TACOMA, WA 98404
(206) 531-3121

WATER BACTERIOLOGICAL ANALYSIS

SAMPLE COLLECTION: READ INSTRUCTIONS ON BACK OF GOLDENROD COPY
If instructions are not followed, sample will be rejected.

DATE COLLECTED MONTH / DAY / YEAR	TIME COLLECTED	COUNTY NAME
8 / 25 / 93	08 : 25 ☒ AM ☐ PM	King

TYPE OF SYSTEM
☒ PUBLIC
☐ INDIVIDUAL (serves only 1 residence)

IF PUBLIC SYSTEM, COMPLETE:
I.D. No. ☐☐☐☐☐☐ CIRCLE GROUP (A) B

NAME OF SYSTEM
SPWSD

SPECIFIC LOCATION WHERE SAMPLE COLLECTED (ie. kitchen tap @ school, fire station, fountain)
well 10
discharge tube

TELEPHONE NO.
DAY (206) 851-5562
EVENING ( )

SAMPLE COLLECTED BY: (Name)
CR Carr / Associates

SYSTEM OWNER/MGR.: (Name)
Ron Little

SOURCE TYPE ☐ GROUND WATER UNDER SURFACE INFLUENCE
☐ SURFACE ☒ WELL or WELL FIELD ☐ SPRING ☐ PURCHASED or INTERTIE ☐ COMBINATION or OTHER

SEND REPORT TO: (Print Full Name, Address and Zip Code)
Carr Associates
Po Box 1158
Gig Harbor WASHINGTON 98335

TYPE OF SAMPLE (check only one in this column)

☐ ROUTINE DRINKING WATER check treatment →
☐ Chlorinated (Residual:____Total____Free)
☐ Filtered
☐ Untreated or Other_____

☐ REPEAT SAMPLE
Previous coliform presence Lab #_____
Previous coliform presence Date____/____/____

☒ RAW SOURCE WATER Source # S ☐☐ ☐ Total Coliform ☐ Fecal Coliform
☒ NEW CONSTRUCTION or REPAIRS
☐ OTHER (Specify) _____

REMARKS

LABORATORY RESULTS (FOR LAB USE ONLY)

METHOD USED

MF	MPN	PA	MMO	

TOTAL COLIFORM A /100 ml
E. COLI_____/100 ml
FECAL COLIFORM_____/100 ml
HETEROTROPHIC_____/per ml

ANOTHER SAMPLE REQUIRED

SAMPLE NOT TESTED BECAUSE:
☐ Sample too old
☐ Wrong container
☐ Incomplete form
☐ _____

TEST UNSUITABLE BECAUSE:
☐ Confluent growth
☐ TNTC
☐ Turbid culture
☐ Excess debris

NEW CONST DRINKING WATER SAMPLE RESULTS

☐ UNSATISFACTORY, Coliforms present
REPEAT SAMPLES REQUIRED ☐ E. Coli present ☐ E. Coli absent ☐ Fecal present ☐ Fecal absent

☒ SATISFACTORY, Coliforms absent

SEE REVERSE SIDE OF GREEN COPY FOR EXPLANATION OF RESULTS

LAB NO.	DATE, TIME RECEIVED	RECEIVED BY
89-5035	8-25-93 11:39 AM	CH

DATE REPORTED 8-31-93 | ROUTE | ACCT

GROUND WATER CONTAMINATION
Susceptibility Assessment Survey Form

SAMAMISH PLATEAU WATER & SEWER DISTRICT
1510 228th Avenue S.E.
Issaquah, Washington 98029

(425) 392-6256

WELL 11.1

GROUND WATER CONTAMINATION
Susceptibility Assessment Survey Form

Well 11.1

TABLE OF CONTENTS

- Susceptibility Assessment Survey Form
- Location Map
- Well 11.1 Wellhead Protection Area
- Aquifer Zone III Potentiometric Surface Map
- Well Log
- Construction Details
- Construction and Testing Report
- Water Sample Results

Ground Water Contamination
Susceptibility Assessment Survey Form
Version 2.2

IMPORTANT! Please complete one form for each ground water source (well, wellfield, spring) used in your water system. Photocopy as necessary.

PART I: System Information

Well owner/manager : SAMMAMISH PLATEAU WATER & SEWER

Water system name : SAMMAMISH PLATEAU WATER & SEWER

County: KING

Water system number: 409009 Source number: _____

Well depth: 491 (ft.) (*From WFI form*)

Source name: WELL 11.1

WA well identification tag number: A A D - 3 8 1

_____ well not tagged

Number of connections: 11,080 Population served: 33,240

Township: 25 N Range: 06 E

Section: 34 1/4 1/4 Section: NE/NW

Latitude/longitude (if available): _____/_____

How was lat./long. determined?

____ global positioning device ____ survey ____ topographic map
____ other: _____

* Please refer to Assistance Packet for details and explanations of all questions in Parts II through V.

PART II: Well Construction and Source Information

1) Date well originally constructed: 8 / 9 / 93 month/day/year

last reconstruction: __ / __ / __ month/day/year

_____ information unavailable

2) Well driller: HOLT DRILLING
10621 TODD ROAD EAST
PUYALLUP, WA. 98372

___ well driller unknown

3) Type of well:

X Drilled: X rotary ___ bored X cable (percussion) ___ Dug

___ Other: ___ spring(s) ___ lateral collector (Ranney)

___ driven ___ jetted ___ other: _____

Additional comments: _____

4) Well report available? X YES (attach copy to form) ___ NO

If no well log is available, please attach any other records documenting well construction; e.g. boring logs, "as built" sheets, engineering reports, well reconstruction logs.

5) Average pumping rate: 500 GPM (gallons/min)

Source of information: CONSTRUCTION & TESTING REPORT

If not documented, how was pumping rate determined? _____

___ Pumping rate unknown

6) Is this source treated? ___ YES X NO

If so, what type of treatment:

___ disinfection ___ filtration ___ carbon filter ___ air stripper ___ other

Purpose of treatment (describe materials to be removed or controlled by treatment):

7) If source is chlorinated, is a chlorine residual maintained: ___ YES X NO

Residual level: _____ (*At the point closest to the source.*)

PART III: Hydrogeologic Information

1) Depth to top of open interval: [check one]

___ (less than) 20 ft ___ 20-50 ft ___ 50-10 ft ___ 100-200 ft X (greater than) 200 ft

___ information unavailable

2) Depth to ground water (static water level):

___ (less than) 20 ft ___ 20-50 ft ___ 50-100 ft X (greater than) 100 ft

___ flowing well/spring (artesian)

How was water level determined?

X well log ___ other: _____

___ depth to ground water unknown

3) If source is a flowing well or spring, what is the confining pressure: N/A

_____ psi (pounds per square inch)
or
_____ feet above wellhead

4) If source is a flowing well or spring, is there a surface impoundment, reservoir, or catchment associated with this source: ___ YES ___ NO N/A

5) Wellhead elevation (height above mean sea level): 360 (ft)

How was elevation determined? ___ topographic map X Drilling/Well Log ___ altimeter

___ other: _____

___ information unavailable

6) Confining layers: (This can be completed only for those sources with a drilling log, well log or geologic report describing subsurface conditions. Please refer to assistance package for example.)

___ evidence of a confining layer in well log

X no evidence of a confining layer in well log

If there is evidence of a confining layer, is the depth to ground water more than 20 feet above the bottom of the lowest confining layer? ___ YES ___ NO

___ information unavailable

7) Sanitary setback:

___ (less than) 100 ft* X 100-120 ft ___ 120-200 ft ___ (greater than) 200 ft

* if less than 100 ft describe the site conditions:

_____

_____

_____

_____

8) Wellhead construction:

X wellhead enclosed in a wellhouse

___ controlled access (describe): _____

_____

___ other uses for wellhouse (describe): _____

_____

___ no wellhead control

9) Surface seal:

___ 18 ft

___ (less than) 18 ft (no Department of Ecology approval)

___ (less than) 18 ft (Approved by Ecology, include documentation)

X (greater than) 18 ft

___ depth of seal unknown

___ no surface seal

10) Annual rainfall (inches per year):

___ (less than) 10 in/yr ___ 10-25 in/yr X (greater than) 25 in/yr

PART IV: Mapping Your Ground Water Resource

1) Annual volume of water pumped: 262,800,000. (gallons)

How was this determined?

__ meter

X estimated: ✓ pumping rate (500gpm)

__ pump capacity (_____)

__ other: _____

2) "Calculated Fixed Radius" estimate of ground water movement:
(see Instruction Packet)

6 month ground water travel time : 980 (ft)

1 year ground water travel time : 1390 (ft)

5 year ground water travel time: 3110 (ft)

10 year ground water travel time: 4400 (ft)

These are the CFR per the sample pull. The DISTRICT HAS ADDITIONAL WHPA CAPTURE ZONE INFO FOR THIS WELL WHICH IS ATTACHED.

Information available on length of screened/open interval?

X YES __ NO

Length of screened/open interval: 40 (ft)

3) Is there a river, lake, pond, stream, or other obvious surface water body within the 6 month time of travel boundary? __ YES X NO (mark and identify on map).

4) Is there a stormwater and/or wastewater facility, treatment lagoon, or holding pond located within the 6 month time of travel boundary? __ YES X NO (mark and identify on map).

Comments: _____

PART V: Assessment of Water Quality

1) Regional sources of risk to ground water:

Please indicate if any of the following are present within a circular area around your water source having a radius up to and including the five year ground water travel time:

	6 month	1 year	5 year	unknown
likely pesticide application		X	X	
stormwater injection wells	No	No	No	
other injection wells* SEE COMMENTS	No	X		
abandoned ground water well				/
landfills, dumps, disposal areas				/
known hazardous materials clean-up site				/
water system(s) with known quality problems				/
population density (greater than) 1 house/acre	X	X	X	
residences commonly have septic tanks	X	X	X	
Wastewater treatment lagoons	No	No	No	
sites used for land application of waste	No	No	No	

Mark and identify on map any of the risks listed above which are located within the 6 month time of travel boundary? (*Please include a map of the wellhead and time of travel areas with this form. Please locate and mark any of the following.*)

If other recorded or potential sources of ground water contamination exist within the ten year time of travel circular zone around your water supply, please describe:

* WELL 5 (AS SHOWN ON THE LOCATION MAP) HAS BEEN USED AS AN INJECTION WELL AS PART OF THE GROUNDWATER RECHARGE PROJECT.

2) Source specific water quality records:

Please indicate the occurrence of any test results since 1986 that meet the following conditions: (Unless listed on assessment, MCLs are listed in assistance package.)

A. Nitrate: (Nitrate MCL = 10 mg/l)	YES
Results greater than MCL	___
(less than) 2 mg/liter nitrate	___
2-5 mg/liter nitrate	___
(greater than) 5 mg/liter nitrate	___
Nitrate sampling records unavailable	___

B. VOCs: (VOC detection level 0.5 ug/l or 0.0005 mg/l.)	YES
Results greater than MCL or SAL	___
VOCs detected at least once	___
VOC test performed but never detected	___
VOC sampling records unavailable	___

C. EDB/DBCP:	YES
(EDB MCL = 0.05 ug/l or 0.00005 mg/l. DBCP MCL = 0.2 ug/l or 0.0002 mg/l.)	
EDB/DBCP detected below MCL at least once	___
EDB/DBCP detected above MCL at least once	___
EDB/DBCP never detected	___
EDB/DBCP tests required but not yet completed	___
EDB/DBCP tests not required	___

D. Other SOCs (pesticides and other synthetic organic chemicals):	YES
Other SOCs detected	___
Other SOC tests performed but none detected *	___
Other SOC tests not performed	___

*If any SOCs in addition to EDB/DBCP were detected, please identify and date. If other SOC tests were performed, but no SOCs detected, list test methods here: _____

THE TEST RESULTS FOR TESTS PERFORMED ON WELL 11.1 AT THE TIME OF CONSTRUCTION ARE ENCLOSED

E. Bacterial contamination: YES

Any bacterial detection(s) in the past 3 years in samples taken from the source (not distribution sampling records). N/A

Has source (in past 3 years) had a bacteriological contamination problem found in distribution samples that was attributed to the source. ___

Source sampling records for bacteria unavailable ___

Part VI: Geographic or Hydrologic Factors Contributing to a Non-Circular Zone of Contribution

The following questions will help identify those ground water systems which may not be accurately represented by the calculated fixed radius (CFR) method described in Part IV. For these sources, the CFR areas should be used as a preliminary delineation of the critical time of travel zones for that source. As a system develops its Wellhead Protection Plan for theses sources, a more detailed delineation method should be considered.

1)Is there evidence of obvious hydrologic boundaries within the 10 year time of travel zone of the CFR? (Does the largest circle extend over a stream, river, lake, up a steep hillside, and/or over a mountain or ridge?)

X YES ___ NO

Describe with references to map produced in Part IV:

INGLEWOOD CREEK IS LOCATED WITHIN THE ONE YEAR BOUNDARY. VARIOUS WETLANDS ARE ALSO LOCATED IN THE FIVE & TEN YEAR PLAN.

2) Aquifer Material:

A) Does the drilling log, well log or other geologic/engineering reports identify that the well is located in an area where the underground conditions are identified as fractured rock and/or basalt terrain?

___ YES X NO

B) Does the drilling log, well log or other geologic/engineering reports indicate that the well is located in an area where the underground conditions are primarily identified as coarse sand and gravel?

X YES ___ NO

3) Is the source located in an aquifer with a high horizontal flow rate? (These can include sources located on flood plains of large rivers, artesian wells with high water pressure, and/or shallow flowing wells and springs.)

__ YES ✓ NO

4) Are there other high capacity wells (agricultural, municipal and/or industrial) located within the CFRs?

a) Presence of ground water extraction wells removing more than approximately 500 gal/min within...

	YES	NO	unknown
6 month travel time		✓	
6 month–1 year travel time		✓	
1–5 year travel time		✓	
5–10 year travel time		✓	

b) Presence of ground water recharge wells (dry wells) or heavy irrigation within...

	YES	NO	unknown
1 year travel time		✓	
1–5 year travel time		✓	
5–10 year travel time		✓	

Please identify or describe additional hydrologic or geographic conditions that you believe may affect the shape of the zone of contribution for this source. Where possible, reference them to locations on the map produced in Part IV.

Suggestions and Comments

Did you attend one of the susceptibility workshops? ___ YES ___ NO

Did you find it useful? ___ YES ___ NO

Did you seek outside assistance to complete the assessment? ___ YES ___ NO

. . . .

This form and instruction packet are still in the process of development. Your comments, suggestions and questions will help us upgrade and improve this assessment form. If you found particular sections confusing or problematic please let us know. How could this susceptibility assessment be improved or made clearer? Did the instruction package help you find the information needed to complete the assessment? How much time did it take you to complete the form? Were you able to complete the assessment without additional/outside expertise? Do you feel the assessment was valuable as a learning experience? Any other comments or constructive criticisms you have would be appreciated.

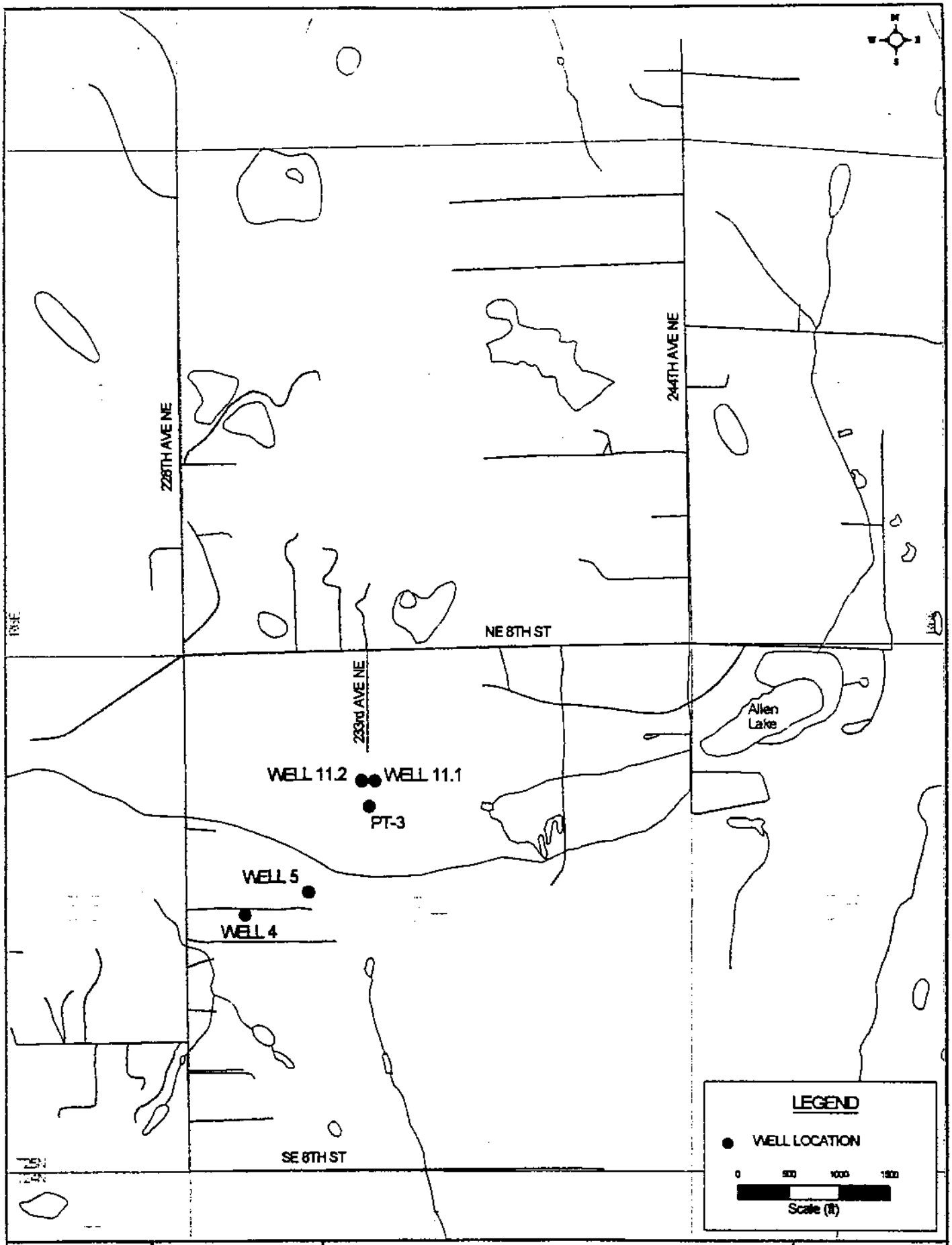

AGI TECHNOLOGIES

Sammamish Plateau Water and Sewer District
Well 11.1 Development/Testing
Project # - 15,287.002

Location Map

Figure 1

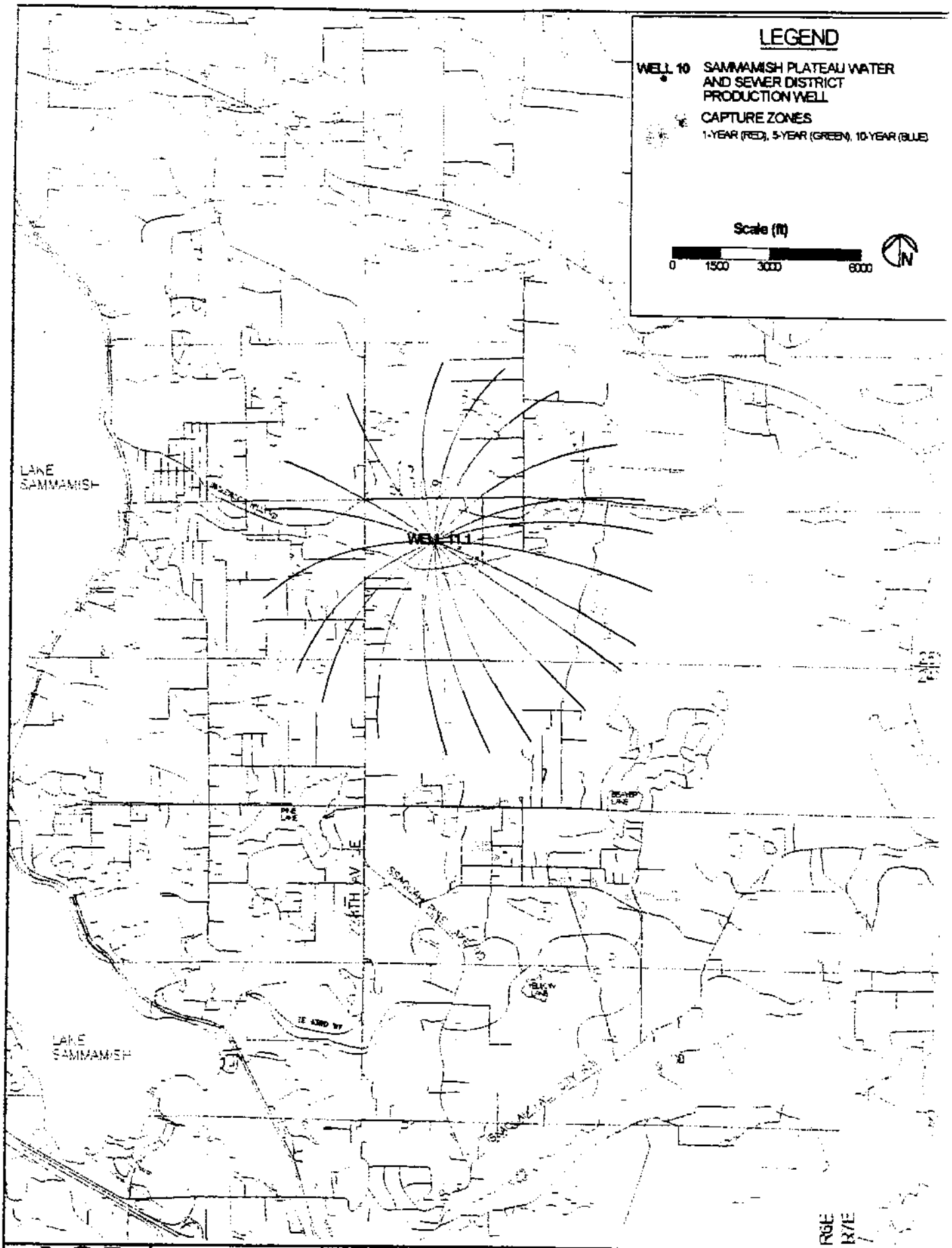

AGI TECHNOLOGIES

Sammamish Plateau Water and Sewer District
Well 11.1 Development/Testing
Project # - 15,287 002

Well 11.1 Wellhead Protection Area

Figure 6

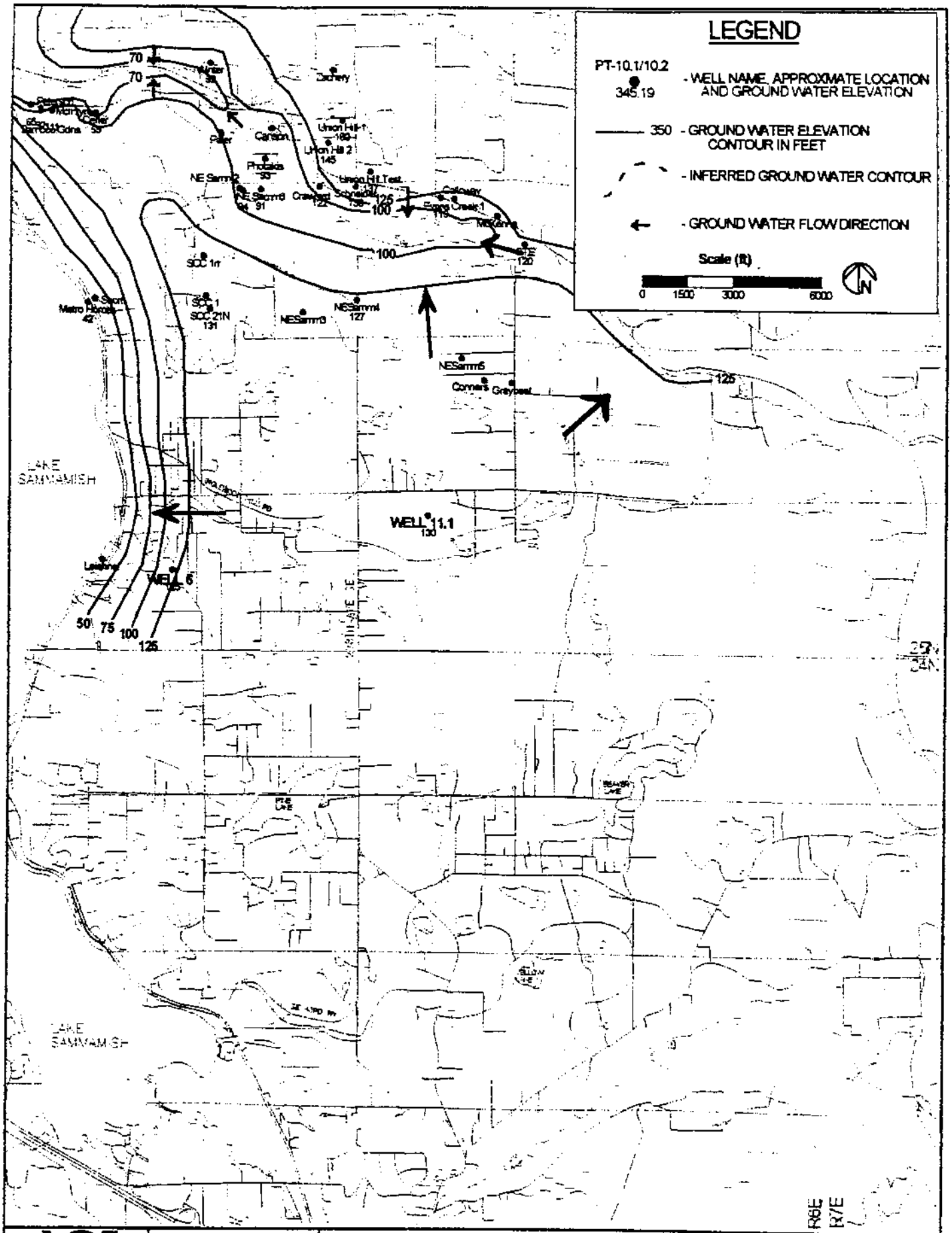

AGI TECHNOLOGIES

Sammamish Plateau Water and Sewer District
Well 11.1 Development/Testing
Project #- 15,267.002

Aquifer Zone III Potentiometric Surface Map

Figure 5

...inal and First Copy with
...partment of Ecology
...nd Copy—Owner's Copy
...l Copy—Driller's Copy

WATER WELL REPORT

STATE OF WASHINGTON

Start Card No. _____

UNIQUE WELL I.D. # AAD381

Water Right Permit No. GL-26573

(1) OWNER: Name Sammamish Plateau Water and Sewer District Address 1510 228th Ave SE, Issaquah, WA 98027

LOCATION OF WELL: County King NW ¼ NW ¼ Sec 34 T. 25 N., R. 6E W.M.

(2a) STREET ADDRESS OF WELL (or nearest address) Lake Washington School Dist.#414, Redmond, WA

PROPOSED USE: ☐ Domestic ☐ Irrigation ☐ DeWater Industrial ☐ Test Well ☐ Municipal ☒ Other ☐

(2) TYPE OF WORK: Owner's number of well (if more than one) 11.1

Abandoned ☐ New well ☒ Deepened ☐ Reconditioned ☐ Method: Dug ☐ Cable ☒ Rotary ☐ Bored ☐ Driven ☐ Jetted ☐

DIMENSIONS: Diameter of well 10 inches. Drilled 499 feet. Depth of completed well 491 ft.

(6) CONSTRUCTION DETAILS:

Casing installed: 16" Diam. from 0 ft. to 186 ft.
Welded ☒ 16" Diam. from 212 ft. to 219 ft.
Liner installed ☐
Threaded ☐ 10" Diam. from +2.2 ft. to 409 ft.

Perforations: Yes ☐ No ☒
Type of perforator used _____
SIZE of perforations _____ in. by _____ in.
_____ perforations from _____ ft. to _____ ft.
_____ perforations from _____ ft. to _____ ft.
_____ perforations from _____ ft. to _____ ft.

Screens: Yes ☒ No ☐
Manufacturer's Name Johnson
Type 304 Stainless Model No. P.S.
Diam. 6 inch Slot size 0.35 from 409 ft. to 419 ft.
Diam. _____ Slot size _____ from 426 ft. to 431 ft.
461 486

Gravel packed: Yes ☒ No ☐ Size of gravel CSS 8-12
Gravel placed from 377 ft. to 491 ft.

Surface seal: Yes ☒ No ☐ To what depth? 43 ft.
Material used in seal Cement
Did any strata contain unusable water? Yes ☐ No ☒
Type of water? _____ Depth of strata _____
Method of sealing strata off _____

PUMP: Manufacturer's Name _____
Type: _____ H.P. _____

(8) WATER LEVELS: Land-surface elevation above mean sea level 360 ft.
Static level 230 ft. below top of well Date 7/21/93
Artesian pressure _____ lbs. per square inch Date _____
Artesian water is controlled by _____ (Cap, valve, etc.)

WELL TESTS: Drawdown is amount water level is lowered below static level
Was a pump test made? Yes ☒ No ☐ If yes, by whom? _____
Yield: _____ gal./min. with _____ ft. drawdown after _____ hrs.
" " " "
" " " "

Recovery data (time taken as zero when pump turned off) (water level measured from well top to water level)

Time	Water Level	Time	Water Level	Time	Water Level

Date of test _____

Bailer test _____ gal./min. with _____ ft. drawdown after _____ hrs.

(10) WELL LOG or ABANDONMENT PROCEDURE DESCRIPTION

Formation: Describe by color, character, size of material and structure, and show thickness of aquifers and the kind and nature of the material in each stratum penetrated, with at least one entry for each change of information.

MATERIAL	FROM	TO
Hard-pan	0	41
Brown Silthound Sands and Gravels	41	90
Brownish-Orange Silthound sands and Gravels	90	112
Brown Silthound Sands and Gravels	112	115
Brown Silthound Sands and Gravels with Cobbles	115	137
Brown Silthound Sands and Gravels	137	156
Brown sands and Gravels with Silt, WB	156	180
Brown sands and Gravels, Water Bearing	180	201
Brown Sands and Gravels with Silt	201	204
Brown sands and Gravels with trace Silt	204	210
Brown Silthound Sands and Gravels	210	220
Gray Silty Sands with few Gravels	220	241
Silty Sands and Gravels	241	251
Brownish-Gray Silty Sands and Gravels	251	291
Silty sands, Gravels and Cobbles	291	305
Silty Sands, Gravels and with few Cobbles	305	321
Tan Silty Sands and Gravels Water Bearing	321	351
Tan Silty Sands and Gravels	351	363
Tan Silthound sands and Gravels	363	375
Tan Silthound Sands and Gravels with Cobbles	375	390
Tan Silty sands, Gravels and Cobbles; WB	390	410
Tannish Sands and Gravels	410	423
Tan Silty sands and Gravels	423	429
Tannish Sands and Gravels	429	434
Tan Silty Sands, Gravels and Cobbles	434	464
Tannish Sands and Gravels	464	489
Gray Sands and Cobbles	489	499

Note: Final development and testing has not been done as of the completion date.

Work started 4/28/93, 19. Completed 8/9/93, 19.

WELL CONSTRUCTOR CERTIFICATION:

I constructed and/or accept responsibility for construction of this well, and its compliance with all Washington well construction standards. Materials used and the information reported above are true to my best knowledge and belief.

NAME Holt Drilling, Inc. (PERSON, FIRM, OR CORPORATION) (TYPE OR PRINT)

Address 10621 Todd Road East, Puyallup, WA 98372

(Signed) _____ License No. _____
WELL DRILLER

Contractor's

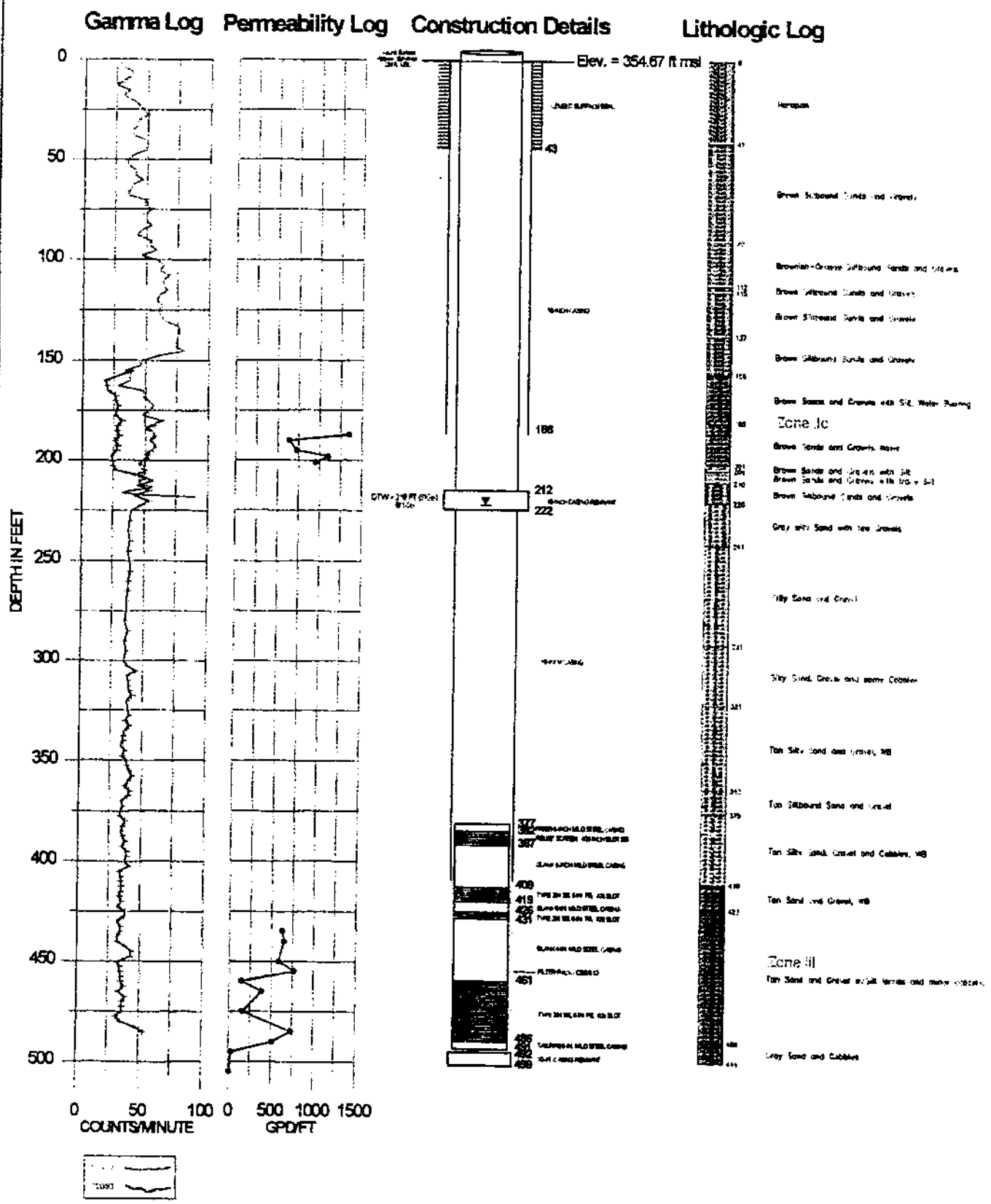

AGI TECHNOLOGIES	Sammamish Plateau Water and Sewer District Well 11.1 Development/Testing Project # - 15,287.002	**Well 11.1** Hydrogeologic Logs and Construction Details	Figure 2

AGI TECHNOLOGIES

PRODUCTION WELL 11.1
SHALLOW COMPLETION CONSTRUCTION AND TESTING REPORT
SAMMAMISH PLATEAU WATER AND SEWER DISTRICT

SUMMARY

On June 1, 1993, Holt Drilling of Puyallup, Washington finished the first completion of Well 11.1. For this completion, the 16-inch well was screened above sea level in a brown sand and gravel aquifer between 186 and 210 feet below ground surface (bgs). A 6-hour test at 130 gallons per minute (gpm) caused 14.5 feet of drawdown for a specific capacity of 9 gallons per minute per foot of drawdown (gpm/ft-dd).

The optimum yield for the Well 11.1 shallow completion is calculated at 200 gpm. This is below the District's target aquifer criteria for a production well. As a result, Well 11.1 was drilled to and completed in the deeper Aquifer Zone III. Zone III is a below-sea level aquifer and was also tested at Well 11.1. The results of the Zone III test are found in the February 2, 1996 Production Well 11.1 Construction and Testing Report. Details of the shallow completion test are described below:

SHALLOW COMPLETION DETAILS

Screened zone:	Plateau Aquifer Zone II
Screen depth:	186 to 210 ft. (bgs)
Screen elevation:	169 to 145 ft. (msl)
Initial water level:	158.99 ft. (below measuring point)
Date:	June 3, 1993
Measuring point stickup:	2.17 ft. (above ground surface)
Ground surface elevation:	354.67 ft. (msl)

Pumping Test Results

Results of the Well 11.1, Zone II pumping test are illustrated in **Figures 1** and **2**. To conduct the test, a 50-horsepower submersible pump was installed in the well to a depth of 182 feet. The results of this 6-hour pumping test are:

OPTIMUM YIELD CALCULATION

Well No.: Production Well 11.1

Owner: Sammamish Plateau Water and Sewer District

OPTIMUM YIELD = USABLE DRAWDOWN x LONG-TERM SPECIFIC CAPACITY

LONG-TERM SPECIFIC CAPACITY = 45 gpm/ft. of drawdown at stabilization or at maximum pumping term

= 45 gpm/ft.

USABLE DRAWDOWN = TOTAL AVAILABLE DRAWDOWN - ALLOWANCES

TOTAL AVAILABLE DRAWDOWN is:

Max. Pump Setting	370 ft. (Below Ground Surface)
Static Water Level	220 ft. (Below Ground Surface)
Total Available Drawdown	150 ft.

ALLOWANCES include:

Pump Submergence	24 ft.
Interference	4 ft.
Seasonal Fluctuations	10 ft. (Estimated)
Other (Tidal, Barometric)	1 ft.
Total Allowances	39 ft.

USABLE DRAWDOWN = 150 ft. - 39 ft. = 111 ft.

For Well 11.1,

OPTIMUM YIELD = 111 ft. x 4.5 gpm/ft. - drawdown

= **500 gpm** (Estimated)

...se Print Plainly

...E HEAVY PENCIL

STATE OF WASHINGTON
DEPARTMENT OF HEALTH
PUBLIC HEALTH LABORATORIES
OFFICE OF RADIATION LABORATORIES
1610 N.E. 150TH ST., SEATTLE, WA 98155-7224

WATER SAMPLE INFORMATION FOR RADIATION ANALYSES

...NUMBER	SYSTEM NAME:	SYSTEM I.D. NO.	SYSTEM CLASS (circle one)	SOURCE NUMBER
0 1 05127	SAMMAMISH PLATEAU W/S.	409009	A B	

...is follow up of a previous out of compliance sample? Yes ☐ No ☐

...s, what was the laboratory number of the previous sample?

COUNTY: KING

SOURCE ...: ___ 1. SURFACE ___ 3. WELL ___ 2. SPRING ___ 4. PURCHASE

IF SOURCE IS LAKE OR STREAM, ENTER NAME

IF SAMPLE WAS DRAWN FROM DISTRIBUTION SYSTEM IT WAS COLLECTED FROM SYSTEM AT: (ADDRESS)

DATE OF FINAL REPORT: 08/28/95

	DATE COLLECTED	DATE RECEIVED
1	08/09/95	08/11/95

SEND REPORT TO: (PRINT FULL NAME & ADDRESS)

AGI TECHNOLOGIES
NAME
SAMMAMISH PLATEAU WATER
P.O. BOX 1158
STREET
GIG HARBOR WA 98335
CITY ZIP CODE
TELEPHONE: 206 851-5562
AREA CODE

LABORATORY REPORT
(DO NOT WRITE BELOW THIS LINE)

ANALYSES	LESS THAN	RESULTS pCi/L	MCL pCi/L	COMPLIANCE YES	COMPLIANCE NO	CHEMIST INITIALS
...ss Alpha	<	3.0		✓		[illegible]
...ium						
...ss Alpha ...e Uranium			15			
...ium-226			3			
...ium-226						
...ium-226 Plus ...ium-228			5			
...on-222		225 ± 25 pCi/L				[illegible]
...s Beta	<	4.0	50	✓		[illegible]
...ntium-89			80			
...rontium-90			8			
...m-134			80			
...e-131			3			
...n			20,000			

...s the maximum contaminant Level Allowed

LABORATORY SUPERVISOR (Name or Initials): [illegible]

QUALITY ASSURANCE SUPERVISOR (Name or Initials): [illegible]

CHARGE: $120.00

REMARKS:

New Well #11.1

BILL TO:

Sammamish Plateau W/S.
ATTN: RON LITTLE
1510 - 228th Ave. S.E.
Issaquah, WA 98027

WATER MANAGEMENT LABORATORIES INC.
1515 80th St. E.
Tacoma, WA 98404
531-3121

VOLATILE ORGANIC CHEMICAL REPORT

Results by Analysis by EPA Method 524.2
Measurement of Purgeable Organic Compounds in Water by Capillary Column
Gas Chromatography/Mass Spectrometry

Send Report To:
AGI Technologies
P.O. box 1158
Gig Harbor, WA 98335

Bill:
Sammamish Plateau Water and Sewer Distr
1510 228th Ave. E.
Issaquah, WA 98027

COUNTY : King
SYSTEM NAME : SPWSD well 11.1
SYSTEM ID NO. : NA Engineering
DATE COLLECTED: 08/09/95
DATE ANALYZED : 08/15/95
SOURCE NUMBER : S01
SOURCE TYPE : Well

LABORATORY NO. : 089
DATA FILE : 08972485
ANALYST : Martin L Okiro
DATE OF REPORT : August 18, 1995
SUPERVISOR'S INITIALS : LMK

EPA CODE	NAME OF COMPOUND	MCL* ug/L	AMOUNT ug/L
	REGULATED COMPOUNDS		
2976	VINYL CHLORIDE	2	ND
2977	1,1-DICHLOROETHYLENE	7	ND
2981	1,1,1-TRICHLOROETHANE	200	ND
2982	CARBON TETRACHLORIDE	5	ND
2990	BENZENE	5	ND
2980	1,2-DICHLOROETHANE	5	ND
2984	TRICHLOROETHYLENE	5	ND
2969	p-DICHLOROBENZENE	75	ND
2979	t-1,2-DICHLOROETHYLENE	100	ND
2380	c-1,2-DICHLOROETHYLENE	70	ND
2983	1,2-DICHLOROPROPANE	5	ND
2991	TOLUENE	1000	ND
2987	TETRACHLOROETHYLENE	5	ND
2989	CHLOROBENZENE	100	ND
2992	ETHYL BENZENE	700	ND
2995	m/p-XYLENES		ND
2997	o-XYLENE (total xylene MCL) =	10000	ND
2996	STYRENE	100	ND
2968	o-DICHLOROBENZENE	600	ND
2964	METHYLENE CHLORIDE	5	ND
2985	1,1,2-TRICHLOROETHANE	5	ND
2418	1,2,4-TRIMETHYLBENZENE	70	ND
	TRIHALOMETHANES (THM total) =	100	
2941	CHLOROFORM		ND
2943	BROMODICHLOROMETHANE		ND
2944	CHLORODIBROMOMETHANE		ND
2942	BROMOFORM		ND

EPA CODE	NAME OF COMPOUND	A AMOUNT ug/L
	UNREGULATED COMPOUNDS	
2210	CHLOROMETHANE	ND
2214	BROMOMETHANE	ND
2216	CHLOROETHANE	ND
2978	1,1-DICHLOROETHANE	ND
2416	2,2,-DICHLOROPROPANE	ND
2410	1,1-DICHLOROPROPANE	ND
2408	DIBROMOMETHANE	ND
2412	1,3-DICHLOROPROPANE	ND
2986	1,1,1,2-TETRACHLOROETHAN	ND
2993	BROMOBENZENE	ND
2414	1,2,3-TRICHLOROPROPANE	ND
2988	1,1,2,2-TETRACHLOROETHAN	ND
2965	o-CHLOROTOLUENE	ND
2966	p-CHLOROTOLUENE	ND
2967	m-DICHLOROBENZENE	ND
2212	DICHLORODIFLUOROMETHANE	ND
2218	TRICHLOROFLUOROMETHANE	ND
2430	BROMOCHLOROMETHANE	ND
2994	ISOPROPYLBENZENE	ND
2998	N-PROPYLBENZENE	ND
2424	1,3,5-TRIMETHYLBENZENE	ND
2426	TERT-BUTYLBENZENE	ND
2428	SEC-BUTYLBENZENE	ND
2030	p-ISOPROPYLTOLUENE	ND
2422	n-BUTYLBENZENE	ND
2378	1,2,4-TRICHLOROBENZENE	ND
2248	NAPTHALENE	ND
2246	HEXACHLOROBUTADIENE	ND
2420	1,2,3-TRICHLOROBENZENE	ND
2228	cis-1,3-DICHLOROPROPENE	ND
2224	trans-1,3-DICHLOROPROPENE	ND

* MCL: Maximum Contaminant Level
NOTE: An amount of ND indicates that the true concentration is less than the method detection limit of 0.5 ug/L.

NOTE:DIBROMOETHANE(EDB) AND DIBROMOCHLOROPROPANE(DBCP) WERE ALSO ANALYZED FOR AND WERE AT CONCENTRATIONS BELOW DETECTION LIMITS. THIS DOES NOT CONSTITUTE AN ADEQUATE ANALYSIS FOR THESE COMPOUNDS. **Composite results are totals.

All results are in milligrams per liter except color which is in color units, pH which is in pH units, specific conductivity which is in micro-mho per cm and turbidity which is in nephelometric turbidity units. Bicarbonate, carbonate and total hardness are in milligrams per liter as calcium carbonate. Total Coliform results are per 100 mls.

Microbiology Lab Number: 08996350
Chemistry Lab Number: 08922147

Sample was analyzed according to Standard Methods for the Examination of Water and Wastewater, 18th Edition.

Chain of Custody record and results of Voc analysis are enclosed.

Sincerely,

Diane DuMond
Lab Coordinator

DD:jlp
enclosure

c:\comm\agi8-10

Test	Result
Iron	0.09
Lead	< 0.002*
Magnesium	5
Manganese	0.048
Mercury	< 0.0005*
Nickel	< 0.04*
Nitrate Nitrogen	< 0.2*
Nitrite Nitrogen	< 0.2*
Potassium	1.3
Selenium	< 0.005*
Silica	21
Silver	< 0.01*
Sodium	7
Specific Conductivity	162
pH	7.4
Sulfate	1
Thallium	< 0.001*
Total Dissolved Solids	98
Total Hardness	71
Turbidity	0.5
Zinc	< 0.05*
Total Coliform	Absent (MMO-MUG Negative)

* < is less than

WATER MANAGEMENT LABORATORIES INC.

1515 80th St. E.
Tacoma, WA 98404
531-3121

August 30,1995

AGI Technologies
PO Box 1158
Gig Harbor, WA 98335
Attn: Scott Coffey

Dear Sir:

Results of analysis of one ground water engineering sample taken by yourself on 08-09-95 at 10:19 a.m. and received 08-10-95 at 10:00 a.m. are as follows:

Sample Identification: Sammamish Plateau Water and Sewer District, Well 11.1

Test	Result
Antimony	< 0.002*
Arsenic	< 0.01*
Barium	< 0.1*
Beryllium	< 0.002*
Bicarbonate	82
Cadmium	< 0.002*
Calcium	20
Carbonate	0
Chloride	2
Chromium	< 0.01*
Color	< 5*
Copper	< 0.02*
Cyanide	< 0.1*
Fluoride	< 0.2*

Please Print Plainly

USE HEAVY PENCIL

STATE OF WASHINGTON
DEPARTMENT OF HEALTH
PUBLIC HEALTH LABORATORIES
OFFICE OF RADIATION LABORATORIES
1610 N.E. 150TH ST., SEATTLE, WA 98155-7224

WATER SAMPLE INFORMATION FOR RADIATION ANALYSES

LAB. NUMBER	SYSTEM NAME:	SYSTEM I.D. NO.	SYSTEM CLASS (circle one)	SOURCE NUMBER
1 0 1 0 4 1 1 1	SPWSD	4 0 9 0 0 9	A B	New

Is this follow up of a previous out of compliance sample? Yes ☐ No ☐

If yes, what was the laboratory number of the previous sample? _ _ _ _ _ _ _

COUNTY: King

SOURCE TYPE: ___ 1. SURFACE ___ 3. WELL ___ 2. SPRING ___ 4. PURCHASE

IF SOURCE IS LAKE OR STREAM, ENTER NAME

IF SAMPLE WAS DRAWN FROM DISTRIBUTION SYSTEM IT WAS COLLECTED FROM SYSTEM AT: (ADDRESS) New Well

DATE OF FINAL REPORT: 06/29/93

	DATE COLLECTED	DATE RECEIVED
1	06/04/93	06/08/93

SEND REPORT TO: (PRINT FULL NAME & ADDRESS)

(collected by CH/Carr Associates
NAME

Carr/Associates

P.O. Box 1158
STREET

Gig Harobr WA 98335-0168
CITY ZIP CODE

TELEPHONE: (206) 851-5562
AREA CODE

LABORATORY REPORT
(DO NOT WRITE BELOW THIS LINE)

ANALYSES	LESS THAN	RESULTS pCi/L	*MCL pCi/L	COMPLIANCE YES	COMPLIANCE NO	CHEMIST INITIALS
Gross Alpha	<	3.0		✓		[illegible]
Uranium		.				
Gross Alpha minus Uranium		.	15			
Radium-226		.	3			
Radium-228		.				
Radium-226 Plus Radium-228		.	5			
Radon-222						
Gross Beta	<	4.0	50	✓		[illegible]
Strontium-89		.	80			
Strontium-90		.	8			
Cesium-134		.	80			
Iodine-131		.	3			
Tritium		.	20,000			

LABORATORY SUPERVISOR (Name or Initials): [illegible]

QUALITY ASSURANCE SUPERVISOR (Name or Initials): Alanida Sibcastate

CHARGE: $70.00

REMARKS:

*MCL is the maximum contaminant Level Allowed

DOH 308-001 Rev. 3/90 [illegible]

DISTRIBUTION: White—Laboratory & Data Processing Green—Bellini Yellow—Water Supplier Pink—Customer Office Gold—District Engineer

DEPARTMENT OF HEALTH

WATER BACTERIOLOGICAL ANALYSIS

SAMPLE COLLECTION: READ INSTRUCTIONS ON BACK OF GOLDENROD COPY
If instructions are not followed, sample will be rejected.

DATE COLLECTED MONTH / DAY / YEAR	TIME COLLECTED	COUNTY NAME
[illegible]	1:35 ☐ AM ☒ PM	King

TYPE OF SYSTEM	IF PUBLIC SYSTEM, COMPLETE:	CIRCLE GROUP
☒ PUBLIC ☐ INDIVIDUAL (serves only 1 residence)	D. No. [illegible]	(A) B

NAME OF SYSTEM: SPWSD

SPECIFIC LOCATION WHERE SAMPLE COLLECTED (ie, kitchen tap @ school, fire station, fountain)	TELEPHONE NO.
Well 11 Shallow	DAY (206) 951-5562
	EVENING ( )
SAMPLE COLLECTED BY: (Name)	SYSTEM OWNER/MGR.: (Name)
CZ Corr / Associates	

SOURCE TYPE ☐ GROUND WATER UNDER SURFACE INFLUENCE
☐ SURFACE ☒ WELL or WELL FIELD ☐ SPRING ☐ PURCHASED or INTERTIE ☐ COMBINATION or OTHER

SEND REPORT TO: (Print Full Name, Address and Zip Code)
Corr / Associates Craig Russell
PO Box 1158
Gig Harbor WASHINGTON 98335

TYPE OF SAMPLE (check only one in this column)
☐ ROUTINE ☐ Chlorinated (Residual Total Free)
☐ DRINKING WATER check treatment ☐ Filtered ☐ Untreated or Other
☐ REPEAT SAMPLE Previous coliform presence Lab # Previous coliform presence Date
☐ RAW SOURCE WATER Source # S ☐ Total Coliform ☐ Fecal Coliform
☐ NEW CONSTRUCTION or REPAIRS
☐ OTHER (Specify)

REMARKS
MMO-MUG NEGATIVE

LABORATORY RESULTS (FOR LAB USE ONLY)
TOTAL COLIFORM ___ /100 ml E. COLI ___ /100 ml
FECAL COLIFORM ___ /100 ml HETEROTROPHIC ___ /100 ml

ANOTHER SAMPLE REQUIRED
SAMPLE NOT TESTED BECAUSE: [illegible]
TEST UNSUITABLE BECAUSE: Confluent growth; TNTC; Turbid culture; Excess debris

NEW CONST DRINKING WATER SAMPLE RESULTS
☐ REPEAT SAMPLE REQUIRED, Coliforms present ☐ SATISFACTORY, Coliforms absent
☐ E. Coli present ☐ E. Coli absent
☐ Fecal present ☐ Fecal absent

SEE REVERSE SIDE OF GREEN COPY FOR EXPLANATION OF RESULTS

LAB NO.	DATE TIME RECEIVED	RECEIVED BY
[illegible]	[illegible]	[illegible]

DATE REPORTED	LABORATORY:
[illegible]	W H L TACOMA, PA.

REMARKS
DOH 305-002 (REV 7/91)

WATER SUPPLIER COPY

DRINKING WATER REQUEST FOR ANALYSIS

CONTACT Craig Russell
COMPANY Carr /Associates
ADDRESS
CITY/STATE
PHONE /

Sound Analytical Services, Inc.

4813 Pacific Hwy East
Tacoma, WA 98424
(206) 922-2310

SAMPLE INFORMATION
SAMPLED BY CR Carr /associates

REQUESTED ANALYSIS

	ID	DATE	TIME	INORGANICS CI	PI	SI	PV	ORGANICS VOC	EDB	PST	HRB	MICROBIOLOGY TC	FC	FS	EC
1	SPW6D	6/3/93	1335					✓							
2															
3															
4															
5															
6															
7															

OTHER ANALYSIS
OTHER ANALYSIS

SPECIAL INSTRUCTIONS:

ANALYSIS CODE:

INORGANICS: COMPLETE INORGANICS = CI PRIMARY INORGANICS = PI SECONDARY INORGANICS = SI PHASE II & V = PV

ORGANICS: VOLATILE ORGANIC COMPOUNDS = VOC EDB/DBCP = EDB PESTICIDES = PST HERBICIDES = HRB

MICROBIOLOGY: TOTAL COLIFORM = TC FECAL COLIFORM = FC FECAL STREP = FS E COLI = EC

Relinquished by Cg Russell Date/Time 6/3/93 @ 1630 Received by Mary Gates Date/Time 6/3/93 4:2
Relinquished by Date/Time Received by Date/Time

SOUND ANALYTICAL SERVICES, INC.

SPECIALIZING IN INDUSTRIAL & TOXIC WASTE ANALYSIS

4813 PACIFIC HIGHWAY EAST, TACOMA, WASHINGTON 98424 - TELEPHONE (206) 922-2310 - FAX (206) 922-5047

DATA QUALIFIER FLAGS

ND: Indicates that the analyte was analyzed for but was not detected. The associated numerical value is the practical quantitation limit, corrected for sample dilution.

J: The analyte was analyzed for and positively identified, but the associated numerical value is an estimated quantity.

C: The identification of this analyte was confirmed by GC/MS.

B1: This analyte was also detected in the associated method blank. The reported sample results have been adjusted for moisture, final extract volume, and/or dilutions performed during extract preparation. The analyte concentration was evaluated prior to sample preparation adjustments, and was determined not to be significantly higher than the associated method blank (less than ten times the concentration reported in the blank).

B2: This analyte was also detected in the associated method blank. However, the analyte concentration in the sample was determined to be significantly higher than the method blank (greater than ten times the concentration reported in the blank).

E: The concentration of this analyte exceeded the instrument calibration range.

D: The reported result for this analyte is calculated based on a secondary dilution factor.

A: This TIC is a suspected aldol-condensation product.

M: Quantitation Limits are elevated due to matrix interferences.

S: The calibration quality control criteria for this compound were not met. The reported concentration should be considered an estimated quantity.

X1: Contaminant does not appear to be "typical" product. Elution pattern suggests it may be _____.

X2: Contaminant does not appear to be "typical" product. Further testing is suggested for identification.

X3: Identification and quantification of peaks was complicated by matrix interference; GC/MS confirmation is recommended.

X4: RPD for duplicates outside QC limits. Sample was re-analyzed with similar results. Sample matrix is nonhomogeneous.

X4a: RPD for duplicates outside QC limits due to analyte concentration near the method practical quantitation limit/detection limit.

X5: Matrix spike was diluted out during analysis.

X6: Recovery of matrix spike outside QC limits. Sample was re-analyzed with similar results.

X7: Recovery of matrix spike outside QC limits. Matrix interference is indicated by blank spike recovery data.

X7a: RPD value for MS/MSD outside QC limits due to high contaminant levels.

X8: Surrogate was diluted out during analysis.

X9: Surrogate recovery outside QC limits due to matrix composition.

X10: Surrogate recovery outside QC limits due to high contaminant levels.

SOUND ANALYTICAL SERVICES, INC.

QUALITY CONTROL REPORT

ORGANIC COMPOUNDS IN DRINKING WATER
EPA METHOD 524.2

Client: Carr/Associates
Lab No: 32506qc
Units: ug/L
Date: June 17, 1993

METHOD BLANK

TRIHALOMETHANES (THM)

EPA Code No.	Compound Name	Result	PQL	Flags
2941	Chloroform	ND	0.5	
2943	Bromodichloromethane	ND	0.5	
2944	Dibromochloromethane	ND	0.5	
2942	Bromoform	ND	0.5	

ND - Not Detected
PQL - Practical Quantitation Limit

Volatile Surrogates

Surrogate	Percent Recovery	Control Limits
4-Bromofluorobenzene	98	80 - 120
1,2 Dichlorobenzene d4	88	70 - 130

port is issued solely for the use of the person or company to whom it is addressed. This laboratory accepts responsibility only for the due performance of analysis in accordance with
y acceptable practice. In no event shall Sound Analytical Services, Inc. or its employees be responsible for consequential or special damages in any kind or in any amount.

SOUND ANALYTICAL SERVICES, INC.

QUALITY CONTROL REPORT

ORGANIC COMPOUNDS IN DRINKING WATER EPA METHOD 524.2

Client: Carr/Associates
Lab No: 32506qc
Units: ug/L
Date: June 17, 1993

METHOD BLANK

UNREGULATED COMPOUNDS

EPA Code No.	Compound Name	Result	PQL	Flags
2212	Dichlorodifluoromethane	ND	1.0	
2210	Chloromethane	ND	1.0	
2214	Bromomethane	ND	1.0	
2218	Trichlorofluoromethane	ND	1.0	
2216	Chloroethane	ND	1.0	
2978	1,1-Dichloroethane	ND	0.5	
2416	2,2-Dichloropropane	ND	0.5	
2430	Bromochloromethane	ND	0.5	
2410	1,1-Dichloropropene	ND	0.5	
2408	Dibromomethane	ND	0.5	

UNREGULATED COMPOUNDS

EPA Code No.	Compound Name	Result	PQL	Flags
2412	1,3-Dichloropropane	ND	0.5	
2986	1,1,1,2-Tetrachloroethane	ND	0.5	
2994	Isopropylbenzene	ND	0.5	
2993	Bromobenzene	ND	0.5	
2988	1,1,2,2-Tetrachloroethane	ND	0.5	
2414	1,2,3-Trichloropropane.	ND	0.5	
2998	n-Propylbenzene	ND	0.5	
2965	2-Chlorotoluene	ND	0.5	
2966	4-Chlorotoluene	ND	0.5	
2424	1,3,5-Trimethylbenzene	ND	0.5	
2426	t-Butylbenzene	ND	0.5	
2418	1,2,4-Trimethylbenzene	ND	0.5	
2428	sec-Butylbenzene	ND	0.5	
2967	1,3-Dichlorobenzene	ND	0.5	
2030	4-Isopropyltoluene	ND	0.5	
2422	n-Butylbenzene	ND	0.5	
2246	Hexachlorobutadiene	ND	0.5	
2248	Naphthalene	ND	0.5	
2420	1,2,3-Trichlorobenzene	ND	0.5	

ND - Not Detected PQL - Practical Quantitation Limit

port is issued solely for the use of the person or company to whom it is addressed. This laboratory accepts responsibility only for the due performance of analysis in accordance with ny acceptable practice. In no event shall Sound Analytical Services, Inc. or its employees be responsible for consequential or special damages of any kind or in any amount.

SOUND ANALYTICAL SERVICES, INC.

SPECIALIZING IN INDUSTRIAL & TOXIC WASTE ANALYSIS

4813 PACIFIC HIGHWAY EAST, TACOMA, WASHINGTON 98424 · TELEPHONE (206)922-2310 · FAX (206)922-5047

QUALITY CONTROL REPORT

ORGANIC COMPOUNDS IN DRINKING WATER
EPA METHOD 524.2

Client: Carr/Associates
Lab No: 32506qc
Units: ug/L
Date: June 17, 1993

METHOD BLANK

REGULATED COMPOUNDS

EPA Code No.	Compound Name	Result	PQL	Flags
2976	Vinyl Chloride	ND	1.0	
2977	1,1-Dichloroethene	ND	0.5	
2981	1,1,1-Trichloroethane	ND	0.5	
2982	Carbon Tetrachloride	ND	0.5	
2990	Benzene	ND	0.5	
2980	1,2-Dichloroethane	ND	0.5	
2984	Trichloroethene	ND	0.5	
2969	1,4-Dichlorobenzene	ND	0.5	
2964	Methylene Chloride	6.8	0.5	
2979	trans-1,2-Dichloroethene	ND	0.5	
2380	Cis-1,2-Dichloroethene	ND	0.5	
2983	1,2-Dichloropropane	ND	0.5	
2991	Toluene	ND	0.5	
2985	1,1,2-Trichloroethane	ND	0.5	
2987	Tetrachloroethene	ND	0.5	
2989	Chlorobenzene	ND	0.5	
2992	Ethylbenzene	ND	0.5	
2995	Meta-Xylene, para-Xylene	ND	0.5	
2997	ortho-xylene	ND	0.5	
2996	Styrene	ND	0.5	
2968	1,2-Dichlorobenzene	ND	0.5	
2378	1,2,4-Trichlorobenzene	ND	0.5	

ND - Not Detected
PQL - Practical Quantitation Limit

Report is issued solely for the use of the person or company to whom it is addressed. This laboratory accepts responsibility only for the due performance of analysis in accordance with generally acceptable practices. In no event shall Sound Analytical Services, Inc. or its employees be responsible for consequential or special damages of any kind or any nature.

SOUND ANALYTICAL SERVICES, INC.

Carr/Associates
Lab No. 32506

June 17, 1993

Lab Sample No. 32506-2 Client ID: FIELD BLANK

EPA Method 524.2 (continued)

TRIHALOMETHANES (THM)

EPA Code No.	Compound Name	Concentration ug/L	PQL	Flags
2941	Chloroform	ND	1.0	
2943	Bromodichloromethane	ND	1.0	
2944	Dibromochloromethane	ND	1.0	
2942	Bromoform	ND	1.0	

ND - Not Detected
PQL - Practical Quantitation Limit

Volatile Surrogates

Surrogate	Percent Recovery	Control Limits
4-Bromofluorobenzene	97	80 - 120
1,2 Dichlorobenzene d4	93	70 - 130

SOUND ANALYTICAL SERVICES, INC.

Carr/Associates
Lab No. 32506
Page 5 of 6
June 17, 1993

Lab Sample No. 32506-2 Client ID: FIELD BLANK

EPA Method 524.2 (continued)

UNREGULATED COMPOUNDS

EPA Code No.	Compound Name	Concentration ug/L	PQL	Flags
2212	Dichlorodifluoromethane	ND	2.0	
2210	Chloromethane	ND	2.0	
2214	Bromomethane	ND	2.0	
2218	Trichlorofluoromethane	ND	2.0	
2216	Chloroethane	ND	2.0	
2978	1,1-Dichloroethane	ND	1.0	
2416	2,2-Dichloropropane	ND	1.0	
2430	Bromochloromethane	ND	1.0	
2410	1,1-Dichloropropene	ND	1.0	
2408	Dibromomethane	ND	1.0	
2412	1,3-Dichloropropane	ND	1.0	
2986	1,1,1,2-Tetrachloroethane	ND	1.0	
2994	Isopropylbenzene	ND	1.0	
2993	Bromobenzene	ND	1.0	
2988	1,1,2,2-Tetrachloroethane	ND	1.0	
2414	1,2,3-Trichloropropane	ND	1.0	
2998	n-Propylbenzene	ND	1.0	
2965	2-Chlorotoluene	ND	1.0	
2966	4-Chlorotoluene	ND	1.0	
2424	1,3,5-Trimethylbenzene	ND	1.0	
2426	t-Butylbenzene	ND	1.0	
2418	1,2,4-Trimethylbenzene	ND	1.0	
2428	sec-Butylbenzene	ND	1.0	
2967	1,3-Dichlorobenzene	ND	1.0	
2030	4-Isopropyltoluene	ND	1.0	
2422	n-Butylbenzene	ND	1.0	
2246	Hexachlorobutadiene	ND	1.0	
2248	Naphthalene	ND	1.0	
2420	1,2,3-Trichlorobenzene	ND	1.0	

ND - Not Detected
PQL - Practical Quantitation Limit

Continued . . . .

This report is issued solely for the use of the person or company to whom it is addressed. This laboratory accepts responsibility only for the due performance of analysis in accordance with industry acceptable practice. In no event shall Sound Analytical Services, Inc. or its employees be responsible for consequential or special damages in any kind or in any amount.

SOUND ANALYTICAL SERVICES, INC.

Carr/Associates
Lab No. 32506

June 17, 1993

Lab Sample No. 32506-2 Client ID: FIELD BLANK

Organic Compounds in Drinking Water
EPA Method 524.2
Date Analyzed: 6-9-93

REGULATED COMPOUNDS

EPA Code No.	Compound Name	Concentration ug/L	PQL	Flags
2976	Vinyl Chloride	ND	2.0	
2977	1,1-Dichloroethene	ND	1.0	
2981	1,1,1-Trichloroethane	ND	1.0	
2982	Carbon Tetrachloride	ND	1.0	
2990	Benzene	ND	1.0	
2980	1,2-Dichloroethane	ND	1.0	
2984	Trichloroethene	ND	1.0	
2969	1,4-Dichlorobenzene	ND	1.0	
2964	Methylene Chloride	11	1.0	B1
2979	trans-1,2-Dichloroethene	ND	1.0	
2380	Cis-1,2-Dichloroethene	ND	1.0	
2983	1,2-Dichloropropane	ND	1.0	
2991	Toluene	ND	1.0	
2985	1,1,2-Trichloroethane	ND	1.0	
2987	Tetrachloroethene	ND	1.0	
2989	Chlorobenzene	ND	1.0	
2992	Ethylbenzene	ND	1.0	
2995	Meta-Xylene, para-Xylene	ND	1.0	
2997	ortho-xylene	ND	1.0	
2996	Styrene	ND	1.0	
2968	1,2-Dichlorobenzene	ND	1.0	
2378	1,2,4-Trichlorobenzene	ND	1.0	

ND - Not Detected
PQL - Practical Quantitation Limit

Continued . . . .

Report is issued solely for the use of the person or company to whom it is addressed. This laboratory accepts responsibility only for the due performance of inspection in accordance with fairly accepted practice. In no event shall Sound Analytical Services, Inc. or its employees be responsible for consequential or special damages.

SOUND ANALYTICAL SERVICES, INC.

Carr/Associates
Lab No. 32506

June 17, 1993

Lab Sample No. 32506-1 Client ID: SPWSD

EPA Method 524.2 (continued)

TRIHALOMETHANES (THM)

EPA Code No.	Compound Name	Concentration ug/L	PQL	Flags
2941	Chloroform	ND	0.5	
2943	Bromodichloromethane	ND	0.5	
2944	Dibromochloromethane	ND	0.5	
2942	Bromoform	ND	0.5	

ND - Not Detected
PQL - Practical Quantitation Limit

Volatile Surrogates

Surrogate	Percent Recovery	Control Limits
4-Bromofluorobenzene	94	80 - 120
1,2 Dichlorobenzene d4	80	70 - 130

Continued . . . . .

report is issued solely for the use of the person or company to whom it is addressed. This laboratory accepts responsibility only for the due performance of analysis in accordance with any acceptable practice. In no event shall Sound Analytical Services, Inc. or its employees be responsible for consequential or special damages in any kind or in any amount.

SOUND ANALYTICAL SERVICES, INC.

Carr/Associates
Lab No. 32506

June 17, 1993

Lab Sample No. 32506-1 Client ID: SPWSD

EPA Method 524.2 (continued)

UNREGULATED COMPOUNDS

EPA Code No.	Compound Name	Concentration ug/L	PQL	Flags
2212	Dichlorodifluoromethane	ND	1.0	
2210	Chloromethane	ND	1.0	
2214	Bromomethane	ND	1.0	
2218	Trichlorofluoromethane	ND	1.0	
2216	Chloroethane	ND	1.0	
2978	1,1-Dichloroethane	ND	0.5	
2416	2,2-Dichloropropane	ND	0.5	
2430	Bromochloromethane	ND	0.5	
2410	1,1-Dichloropropene	ND	0.5	
2408	Dibromomethane	ND	0.5	
2412	1,3-Dichloropropane	ND	0.5	
2986	1,1,1,2-Tetrachloroethane	ND	0.5	
2994	Isopropylbenzene	ND	0.5	
2993	Bromobenzene	ND	0.5	
2988	1,1,2,2-Tetrachloroethane	ND	0.5	
2414	1,2,3-Trichloropropane	ND	0.5	
2998	n-Propylbenzene	ND	0.5	
2965	2-Chlorotoluene	ND	0.5	
2966	4-Chlorotoluene	ND	0.5	
2424	1,3,5-Trimethylbenzene	ND	0.5	
2426	t-Butylbenzene	ND	0.5	
2418	1,2,4-Trimethylbenzene	ND	0.5	
2428	sec-Butylbenzene	ND	0.5	
2967	1,3-Dichlorobenzene	ND	0.5	
2030	4-Isopropyltoluene	ND	0.5	
2422	n-Butylbenzene	ND	0.5	
2246	Hexachlorobutadiene	ND	0.5	
2248	Naphthalene	ND	0.5	
2420	1,2,3-Trichlorobenzene	ND	0.5	

ND - Not Detected
PQL - Practical Quantitation Limit

Continued . . . .

ort is issued solely for the use of the person or company to whom it is addressed. This laboratory accepts responsibility only for the due performance of analysis in accordance with ry acceptable practice. In no event shall Sound Analytical Services, Inc. or its employees be responsible for consequential or special damages of any kind or in any amount

SOUND ANALYTICAL SERVICES, INC.

SPECIALIZING IN INDUSTRIAL & TOXIC WASTE ANALYSIS

4813 PACIFIC HIGHWAY EAST, TACOMA, WASHINGTON 98424 - TELEPHONE (206)922-2310 - FAX (206)922-5047

Report To: Carr/Associates

Date: June 17, 1993

Report On: Analysis of Water

Lab No.: 32506

IDENTIFICATION:

Sample Received on 06-03-93

ANALYSIS:

Lab Sample No. 32506-1

Client ID: SPWSD

Organic Compounds in Drinking Water
EPA Method 524.2
Date Analyzed: 6-9-93

REGULATED COMPOUNDS

EPA Code No.	Compound Name	Concentration ug/L	PQL	Flags
2976	Vinyl Chloride	ND	1.0	
2977	1,1-Dichloroethene	ND	0.5	
2981	1,1,1-Trichloroethane	ND	0.5	
2982	Carbon Tetrachloride	ND	0.5	
2990	Benzene	ND	0.5	
2980	1,2-Dichloroethane	ND	0.5	
2984	Trichloroethene	ND	0.5	
2969	1,4-Dichlorobenzene	ND	0.5	
2964	Methylene Chloride	1.2	0.5	B1
2979	trans-1,2-Dichloroethene	ND	0.5	
2380	Cis-1,2-Dichloroethene	ND	0.5	
2983	1,2-Dichloropropane	ND	0.5	
2991	Toluene	ND	0.5	
2985	1,1,2-Trichloroethane	ND	0.5	
2987	Tetrachloroethene	ND	0.5	
2989	Chlorobenzene	ND	0.5	
2992	Ethylbenzene	ND	0.5	
2995	Meta-Xylene, para-Xylene	ND	0.5	
2997	ortho-xylene	ND	0.5	
2996	Styrene	ND	0.5	
2968	1,2-Dichlorobenzene	ND	0.5	
2378	1,2,4-Trichlorobenzene	ND	0.5	

ND - Not Detected
PQL - Practical Quantitation Limit

Continued . . . .

...port is issued solely for the use of the person or company to whom it is addressed. The laboratory accepts responsibility only for the due performance of analysis in accordance with ...

DRINKING WATER REQUEST FOR ANALYSIS

CONTACT Craig Russell
COMPANY Carr /Associates
ADDRESS
CITY/STATE
PHONE /

Sound Analytical Services, Inc.

4813 Pacific Hwy East
Tacoma, WA 98424
(206) 922-2310

SAMPLE INFORMATION
SAMPLED BY CR Carr /Associates

REQUESTED ANALYSIS

				INORGANICS			ORGANICS				MICROBIOLOGY			
	ID	DATE	TIME	CI	PI	SI	PV	VOC	EDB	PST	HRB	TC	FC	FS	EC
1	[illegible]	6/3/93	1335	✓											
2															
3															
4															
5															
6				OTHER ANALYSIS											
7				OTHER ANALYSIS											

SPECIAL INSTRUCTIONS:

ANALYSIS CODE:

INORGANICS: COMPLETE INORGANICS = CI PRIMARY INORGANICS = PI SECONDARY INORGANICS = SI PHASE II & V = PV

ORGANICS: VOLATILE ORGANIC COMPOUNDS = VOC EDB/DBCP = EDB PESTICIDES = PST HERBICIDES = HRB

MICROBIOLOGY: TOTAL COLIFORM = TC FECAL COLIFORM = FC FECAL STREP = FS E COLI = EC

Relinquished by Craig Russell Date/Time 6/3/93 [illegible] Received by Mary Carter Date/Time 6/3/93 4:30
Relinquished by Date/Time Received by Date/Time

SOUND ANALYTICAL SERVICES, INC.

SPECIALIZING IN INDUSTRIAL & TOXIC WASTE ANALYSIS
4813 PACIFIC HIGHWAY EAST, TACOMA, WASHINGTON 98424 - TELEPHONE (206) 922-2310 - FAX (206) 922-5047

WATER SAMPLE INFORMATION FOR INORGANIC CHEMICAL ANALYSES

DO NOT WRITE IN SHADED AREAS. PLEASE FILL BOXES NUMBERED 1 THRU 14. SEE BACK FOR INSTRUCTIONS

LABORATORY NUMBER: 107-32505-1

DATE RECEIVED: 06-03-93

1. DATE COLLECTED: 06-03-93

2. SYSTEM NAME: SPWSD 11 SHINGLE

3. SYSTEM ID #:

4. CIRCLE GROUP: A B

5. COUNTY:

6. SOURCE TYPE: [] SURFACE [] WELL [] SPRING [] PURCHASE

7. SAMPLE TAKEN: [] BEFORE TREATMENT [] AFTER TREATMENT

8. SOURCE NO.:

9. SOURCE NAME:

10. COLLECTED BY:

TELEPHONE( )

11. IF TAKEN AFTER TREATMENT, CHECK TREATMENT:
[] FLUORIDATION
[] CHLORINATION
[] FILTRATION
[] WATER SOFTENER, TYPE:
[] OTHER:

12. IF TAKEN FROM DISTRIBUTION, INDICATE ADDRESS:

13. PARTY TO PAY FOR TESTING:

SIGNATURE:
NAME:

ADDRESS:

TELEPHONE: ( )

14. REMARKS: (water quality problems, address for extra copies, etc.)

LABORATORY REPORT
(DO NOT WRITE INSIDE THIS BOX)

TESTS	MCL[1]	LESS THAN	RESULTS	UNITS	COMPLIANCE YES	COMPLIANCE NO	CHEMIST INITIALS
Antimony Sb	0.006	<	.005	mg/l	✓		PB
Arsenic[P] As	0.05	<	0.010	mg/l	✓		PB
Barium[P] Ba	2.0	<	0.005	mg/l	✓		SP
Beryllium Be	0.004	<	.002	mg/l	✓		SP
Cadmium[P] Cd	0.005	<	.005	mg/l	✓		PB
Chromium[P] Cr	0.1	<	0.01	mg/l	✓		SP
Copper Cu	1.0[2]	<	0.025	mg/l	✓		SP
Iron Fe	0.3		0.25	mg/l	✓		SP
Lead[P] Pb	0.05[2]	<	0.003	mg/l	✓		PB
Manganese Mn	0.05	<	0.015	mg/l	✓		SP
Mercury[P] Hg	0.002	<	.0002	mg/l	✓		LE
Nickel Ni	0.1	<	0.04	mg/l	✓		SP
Selenium[P] Se	0.05	<	0.01	mg/l	✓		PB
Silver Ag	0.1	<	0.01	mg/l	✓		SP
Sodium[P] Na		<	0.5	mg/l			SP
Thallium Tl	0.002	<	.002	mg/l	✓		PB
Zinc Zn	5.0		0.33	mg/l	✓		SP
Hardness			65	mg/l as CaCO3	✓		LE
Conductivity	700		150	µmhos/cm	✓		LE
Turbidity[P]	1.0		0.3	NTU	✓		LE
Color	15.0	<	5.0	Color Units	✓		GA
Chloride Cl	250		2.0	mg/l	✓		RK
Cyanide CN	0.2	<	0.05	mg/l	✓		SH
Fluoride[P] F	2.0	<	0.1	mg/l	✓		RK
Nitrate[P] as N	10.0		0.54	mg/l	✓		RK
Nitrite as N	1.0	<	0.05	mg/l	✓		RK
Sulfate SO_4	250		3.0	mg/l	✓		RK
TDS	500		100	mg/l	✓		GA

LABORATORY COMMENTS:

CHARGE:	LABORATORY SUPERVISOR:	DATE OF REPORT:
	[signature]	6/15/93

1-MCL: Maximum Contaminant Level; 2-This is the State MCL. Federal Action Levels are 0.015 mg/L for Lead and 1.3 mg/L for Copper; P-Primary Standard; TDS-Total Dissolved Solids

SOUND ANALYTICAL SERVICES, INC.

SPECIALIZING IN INDUSTRIAL & TOXIC WASTE ANALYSIS

4813 PACIFIC HIGHWAY EAST, TACOMA, WASHINGTON 98424 - TELEPHONE (206)922-2310 - FAX (206)922-5047

QUALITY CONTROL REPORT

Total Metals

Client: Carr Associates
Lab No: 32505qc2
Units: mg/L
Date: June 11, 1993

METHOD BLANK

Parameter	Result	PQL
Antimony	ND	0.005
Arsenic	ND	0.010
Barium	ND	0.005
Beryllium	ND	0.002
Cadmium	ND	0.004
Chromium	ND	0.01
Copper	ND	0.025
Iron	ND	0.10
Lead	ND	0.003
Manganese	ND	0.015
Mercury	ND	0.0002
Nickel	ND	0.04
Selenium	ND	0.010
Silver	ND	0.01
Sodium	ND	0.50
Thallium	ND	0.002
Zinc	ND	0.02

ND - Not Detected
PQL - Practical Quantitation Limit

report is issued solely for the use of the person or company to whom it is addressed. This laboratory accepts responsibility only for the due performance of analysis in accordance with
highly acceptable practice. In no event shall Sound Analytical Services, Inc. or its employees be responsible for consequential or special damages in any form of any manner

SOUND ANALYTICAL SERVICES, INC.

SPECIALIZING IN INDUSTRIAL & TOXIC WASTE ANALYSIS

4813 PACIFIC HIGHWAY EAST, TACOMA, WASHINGTON 98424 - TELEPHONE (206) 922-2310 - FAX (206) 922-5047

QUALITY CONTROL REPORT

General Chemistry

Client: Carr/Associates
Lab No: 32505qc1
Matrix: Water
Units: mg/L
Date: June 11, 1993

METHOD BLANKS

Parameter	Result	Detection Limit
Turbidity, NTU	ND	0.1
Hardness (as $CaCO_3$), mg/L	ND	2
Conductivity, umhos/cm	ND	10
Color, color units	ND	5
Total Dissolved Solids, mg/L	ND	10
Fluoride, mg/L	ND	0.1
Chloride, mg/L	ND	1.0
Nitrate Nitrogen, mg/L	ND	0.05
Nitrite Nitrogen, mg/L	ND	0.05
Sulfate, mg/L	ND	1.0

ND - Not Detected

DUPLICATE

Dup No. 32505-1

Parameter	Sample(S)	Duplicate(D)	RPD
Total Dissolved Solids	100	110	9.5

RPD = Relative Percent Difference
= [(S - D) / ((S + D) / 2)] x 100

'port is issued solely for the use of the person or company to whom it is addressed. This laboratory accepts responsibility only for the due performance of analysis in accordance with 'y accepted practice. In no event shall Sound Analytical Services, Inc. or its employees be responsible for consequential or special damages in any kind or in any amount

SOUND ANALYTICAL SERVICES, INC.

SPECIALIZING IN INDUSTRIAL & TOXIC WASTE ANALYSIS

4813 PACIFIC HIGHWAY EAST, TACOMA, WASHINGTON 98424 - TELEPHONE (206)922-2310 - FAX (206)922-5047

Report To: Carr/Associates Date: June 11, 1993

Report On: Analysis of Water Lab No.: 32505

IDENTIFICATION:
Sample received on 06-03-93

ANALYSIS:

Lab Sample No. 32505-1 Client ID: SPWSD 11 Shallow

INORGANIC PARAMETERS	RESULT	MCL
Antimony(GFAA), mg/L	< 0.005	0.006
Arsenic (GFAA), mg/L	< 0.010	0.05
Barium, mg/L	< 0.005	2.0
Beryllium, mg/L	< 0.002	0.004
Cadmium, mg/L	< 0.005	0.005
Chromium, mg/L	< 0.01	0.1
Copper, mg/L	< 0.025	1.0
Iron, mg/L	0.25	0.3
Lead (GFAA), mg/L	< 0.003	0.05
Manganese, mg/L	< 0.015	0.05
Mercury (CVAA), mg/L	< 0.0002	0.002
Nickel, mg/L	< 0.04	0.1
Selenium (GFAA), mg/L	< 0.010	0.01
Silver, mg/L	< 0.01	0.05
Sodium, mg/L	< 0.50	N/A
Thallium (GFAA), mg/L	< 0.002	0.002
Zinc, mg/L	0.33	5.0
Fluoride, mg/L	< 0.1	2.0
Nitrate Nitrogen, mg/L	0.54	10.0
Nitrite Nitrogen, mg/L	< 0.05	1.0
Chloride, mg/L	2	250
Sulfate, mg/L	3	250
Cyanide, mg/L	< 0.05	0.2
Turbidity, NTU	0.3	1
Hardness (as $CaCO_3$) mg/L	65	N/A
Conductivity, umhos/cm	150	700
Color, Color Units	< 5	15.0
Total Dissolved Solids, mg/L	100	500

MCL - Maximum Contaminant Level
N/A - Not Applicable

[illegible]port is issued solely for the use of the person or company to whom it is addressed. This laboratory accepts responsibility only for the due performance of analysis in accordance with [illegible] acceptable practice. In no event shall Sound Analytical Services, Inc. or its employees be responsible for consequential or special damages [illegible] any amount.

GROUND WATER CONTAMINATION
Susceptibility Assessment Survey Form

SAMMAMISH PLATEAU WATER & SEWER DISTRICT
1510 228TH Avenue S.E.
Issaquah, Washington 98029

(425) 392-6256

WELL 11.2

GROUND WATER CONTAMINATION
Susceptibility Assessment Survey Form

Well 11.2

TABLE OF CONTENTS

- Susceptibility Assessment Survey Form
- Production Well Location Map
- Well 11.2 Wellhead Protection Area
- Aquifer Zone IV Potentiometric Surface Map
- Topography Map – Plateau Area
- Surface Water Features – Plateau Area
- Well Log
- Construction Details
- Water Facilities Inventory Form
- Water Sample Results

Ground Water Contamination
Susceptibility Assessment Survey Form
Version 2.2

IMPORTANT! Please complete one form for each ground water source (well, wellfield, spring) used in your water system. Photocopy as necessary.

PART I: System Information

Well owner/manager : SAMMAMISH PLATEAU WATER AND SEWER DIST.

Water system name : SAMMAMISH PLATEAU WATER & SEWER DISTRICT

County: KING

Water system number: 409009 Source number: S12

Well depth: 884 (ft.) (*From WFI form*)

Source name: WELL 11.2

WA well identification tag number: A A D - 3 8 2

_____ well not tagged

Number of connections: 11,080 Population served: 33,240

Township: 25 N Range: 06E

Section: 34 1/4 1/4 Section: NE/NW

Latitude/longitude (if available): _____/_____

How was lat./long. determined?

____ global positioning device ____ survey ____ topographic map
____ other: _____

* Please refer to Assistance Packet for details and explanations of all questions in Parts II through V.

PART II: Well Construction and Source Information

1) Date well originally constructed: 8 / 6 / 93 month/day/year

last reconstruction: __ / __ / __ month/day/year

_____ information unavailable

2) Well driller: HOLT DRILLING
10621 TODD ROAD EAST
PUYALLUP, WA. 98372

___ well driller unknown

3) Type of well:

✓ **Drilled:** X rotary ___ bored X cable (percussion) ___ **Dug**

___ **Other:** ___ spring(s) ___ lateral collector (Ranney)

___ driven ___ jetted ___ other: _____

Additional comments: _____

4) Well report available? X YES (attach copy to form) ___ NO

If no well log is available, please attach any other records documenting well construction; e.g. boring logs, "as built" sheets, engineering reports, well reconstruction logs.

5) Average pumping rate: 2,000 (gallons/min)

Source of information: WATER FACILITIES INVENTORY

If not documented, how was pumping rate determined? _____

___ Pumping rate unknown

6) Is this source treated? ___ YES X NO

If so, what type of treatment:

___ disinfection ___ filtration ___ carbon filter ___ air stripper ___ other

Purpose of treatment (describe materials to be removed or controlled by treatment):

_____

7) If source is chlorinated, is a chlorine residual maintained: ___ YES X NO

Residual level: _____ (*At the point closest to the source.*)

PART III: Hydrogeologic Information

1) Depth to top of open interval: [check one]

___ (less than) 20 ft ___ 20-50 ft ___ 50-10 ft ___ 100-200 ft X (greater than) 200 ft

___ information unavailable

2) Depth to ground water (static water level):

___ (less than) 20 ft ___ 20-50 ft ___ 50-100 ft X (greater than) 100 ft

___ flowing well/spring (artesian)

How was water level determined?

X well log ___ other: _____

___ depth to ground water unknown

3) If source is a flowing well or spring, what is the confining pressure: N/A

_____ psi (pounds per square inch)
or
_____ feet above wellhead

4) If source is a flowing well or spring, is there a surface impoundment, reservoir, or catchment associated with this source: ___ YES ___ NO N/A

5) Wellhead elevation (height above mean sea level): 360 (ft)

How was elevation determined? ___ topographic map X Drilling/Well Log ___ altimeter

___ other: _____

___ information unavailable

6) Confining layers: (This can be completed only for those sources with a drilling log, well log or geologic report describing subsurface conditions. Please refer to assistance package for example.)

X evidence of a confining layer in well log

___ no evidence of a confining layer in well log

If there is evidence of a confining layer, is the depth to ground water more than 20 feet above the bottom of the lowest confining layer? X YES ___ NO

___ information unavailable

7) Sanitary setback:

___ (less than) 100 ft* X 100-120 ft ___ 120-200 ft ___ (greater than) 200 ft
* if less than 100 ft describe the site conditions:

_____

_____

_____

_____

8) Wellhead construction:

X wellhead enclosed in a wellhouse

___ controlled access (describe): _____

_____

___ other uses for wellhouse (describe): _____

_____

___ no wellhead control

9) Surface seal:

___ 18 ft

___ (less than) 18 ft (no Department of Ecology approval)

___ (less than) 18 ft (Approved by Ecology, include documentation)

X (greater than) 18 ft

___ depth of seal unknown

___ no surface seal

10) Annual rainfall (inches per year):

___ (less than) 10 in/yr ___ 10-25 in/yr X (greater than) 25 in/yr

PART IV: Mapping Your Ground Water Resource

1) Annual volume of water pumped: 511,408,800 (gallons)

How was this determined?

___ meter

X estimated: ✓ pumping rate (973 gpm)

___ pump capacity (_____)

___ other: _____

2) "Calculated Fixed Radius" estimate of ground water movement:
(see Instruction Packet)

6 month ground water travel time : 800 (ft)

1 year ground water travel time : 1140 (ft)

5 year ground water travel time: 2540 (ft)

10 year ground water travel time: 3590 (ft)

THESE ARE THE CFRs PER THIS PACKET. THE DISTRICT HAS ADDITIONAL WHPA CAPTURE ZONE INFO FOR THIS WELL WHICH IS ATTACHED. THE FOLLOWING QUESTIONS ARE ANSWERED FOR THE CAPTURE ZONE IDENTIFIED ON THE WHPA MAP

Information available on length of screened/open interval?

___ YES ___ NO

Length of screened/open interval: 77 (ft)

3) Is there a river, lake, pond, stream, or other obvious surface water body within the 6 month time of travel boundary? ___ YES X NO (mark and identify on map).

4) Is there a stormwater and/or wastewater facility, treatment lagoon, or holding pond located within the 6 month time of travel boundary? ___ YES X NO (mark and identify on map).

Comments: _____

PART V: Assessment of Water Quality

1) Regional sources of risk to ground water:

Please indicate if any of the following are present within a circular area around your water source having a radius up to and including the five year ground water travel time:

	6 month	1 year	5 year	unknown
likely pesticide application		X	X	
stormwater injection wells	No	No	No	
other injection wells *SEE COMMENTS	No	X		
abandoned ground water well				/
landfills, dumps, disposal areas				/
known hazardous materials clean-up site				/
water system(s) with known quality problems				/
population density (greater than) 1 house/acre	No	X	X	
residences commonly have septic tanks	X	X	X	
Wastewater treatment lagoons	No	No	No	
sites used for land application of waste	No	No	No	

Mark and identify on map any of the risks listed above which are located within the 6 month time of travel boundary? *(Please include a map of the wellhead and time of travel areas with this form. Please locate and mark any of the following.)*

If other recorded or potential sources of ground water contamination exist within the ten year time of travel circular zone around your water supply, please describe:

* WELL 5 (AS SHOWN ON THE AQUIFER ZONE IV POTENTIOMETRIC SURFACE MAP) HAS BEEN USED AS AN INJECTION WELL AS PART OF THE GROUNDWATER RECHARGE PROJECT.

2) Source specific water quality records:

Please indicate the occurrence of any test results since 1986 that meet the following conditions: (Unless listed on assessment, MCLs are listed in assistance package.)

A. Nitrate: (Nitrate MCL = 10 mg/l)	YES
Results greater than MCL	___
(less than) 2 mg/liter nitrate	___
2-5 mg/liter nitrate	___
(greater than) 5 mg/liter nitrate	___
Nitrate sampling records unavailable	___

B. VOCs: (VOC detection level 0.5 ug/l or 0.0005 mg/l.)	YES
Results greater than MCL or SAL	___
VOCs detected at least once	___
VOC test performed but never detected	___
VOC sampling records unavailable	___

C. EDB/DBCP:	YES
(EDB MCL = 0.05 ug/l or 0.00005 mg/l. DBCP MCL = 0.2 ug/l or 0.0002 mg/l.)	
EDB/DBCP detected below MCL at least once	___
EDB/DBCP detected above MCL at least once	___
EDB/DBCP never detected	___
EDB/DBCP tests required but not yet completed	___
EDB/DBCP tests not required	___

D. Other SOCs (pesticides and other synthetic organic chemicals):	YES
Other SOCs detected	___
Other SOC tests performed but none detected *	___
Other SOC tests not performed	___

*If any SOCs in addition to EDB/DBCP were detected, please identify and date. If other SOC tests were performed, but no SOCs detected, list test methods here: _____

THE TEST RESULTS FOR TEST PERFORMED ON WELL 11.2 AT THE TIME OF CONSTRUCTION ARE ENCLOSED.

E. Bacterial contamination:

	YES
Any bacterial detection(s) in the past 3 years in samples taken from the source (not distribution sampling records).	N/A
Has source (in past 3 years) had a bacteriological contamination problem found in distribution samples that was attributed to the source.	___
Source sampling records for bacteria unavailable	___

Part VI: Geographic or Hydrologic Factors Contributing to a Non-Circular Zone of Contribution

The following questions will help identify those ground water systems which may not be accurately represented by the calculated fixed radius (CFR) method described in Part IV. For these sources, the CFR areas should be used as a preliminary delineation of the critical time of travel zones for that source. As a system develops its Wellhead Protection Plan for theses sources, a more detailed delineation method should be considered.

1)Is there evidence of obvious hydrologic boundaries within the 10 year time of travel zone of the CFR? (Does the largest circle extend over a stream, river, lake, up a steep hillside, and/or over a mountain or ridge?)

X YES ___ NO

Describe with references to map produced in Part IV:

ENGLEWOOD CREEK IS LOCATED WITHIN THE ONE YEAR BOUNDARY. VARIOUS WETLANDS ARE ALSO LOCATED IN THE FIVE AND TEN YEAR BOUNDARIES.

2) Aquifer Material:

A) Does the drilling log, well log or other geologic/engineering reports identify that the well is located in an area where the underground conditions are identified as fractured rock and/or basalt terrain?

___ YES X NO

B) Does the drilling log, well log or other geologic/engineering reports indicate that the well is located in an area where the underground conditions are primarily identified as coarse sand and gravel?

X YES ___ NO

3) Is the source located in an aquifer with a high horizontal flow rate? (These can include sources located on flood plains of large rivers, artesian wells with high water pressure, and/or shallow flowing wells and springs.)

__ YES X NO

4) Are there other high capacity wells (agricultural, municipal and/or industrial) located within the CFRs?

a) Presence of ground water extraction wells removing more than approximately 500 gal/min within...

	YES	NO	unknown
6 month travel time		✓	
6 month–1 year travel time		✓	
1–5 year travel time		✓	
5–10 year travel time		✓	

b) Presence of ground water recharge wells (dry wells) or heavy irrigation within...

	YES	NO	unknown
1 year travel time		✓	
1–5 year travel time		✓	
5–10 year travel time		✓	

Please identify or describe additional hydrologic or geographic conditions that you believe may affect the shape of the zone of contribution for this source. Where possible, reference them to locations on the map produced in Part IV.

Suggestions and Comments

Did you attend one of the susceptibility workshops?	___ YES	___ NO
Did you find it useful?	___ YES	___ NO
Did you seek outside assistance to complete the assessment?	___ YES	___ NO

. . . . . .

This form and instruction packet are still in the process of development. Your comments, suggestions and questions will help us upgrade and improve this assessment form. If you found particular sections confusing or problematic please let us know. How could this susceptibility assessment be improved or made clearer? Did the instruction package help you find the information needed to complete the assessment? How much time did it take you to complete the form? Were you able to complete the assessment without additional/outside expertise? Do you feel the assessment was valuable as a learning experience? Any other comments or constructive criticisms you have would be appreciated.

_____

_____

_____

_____

_____

_____

_____

_____

_____

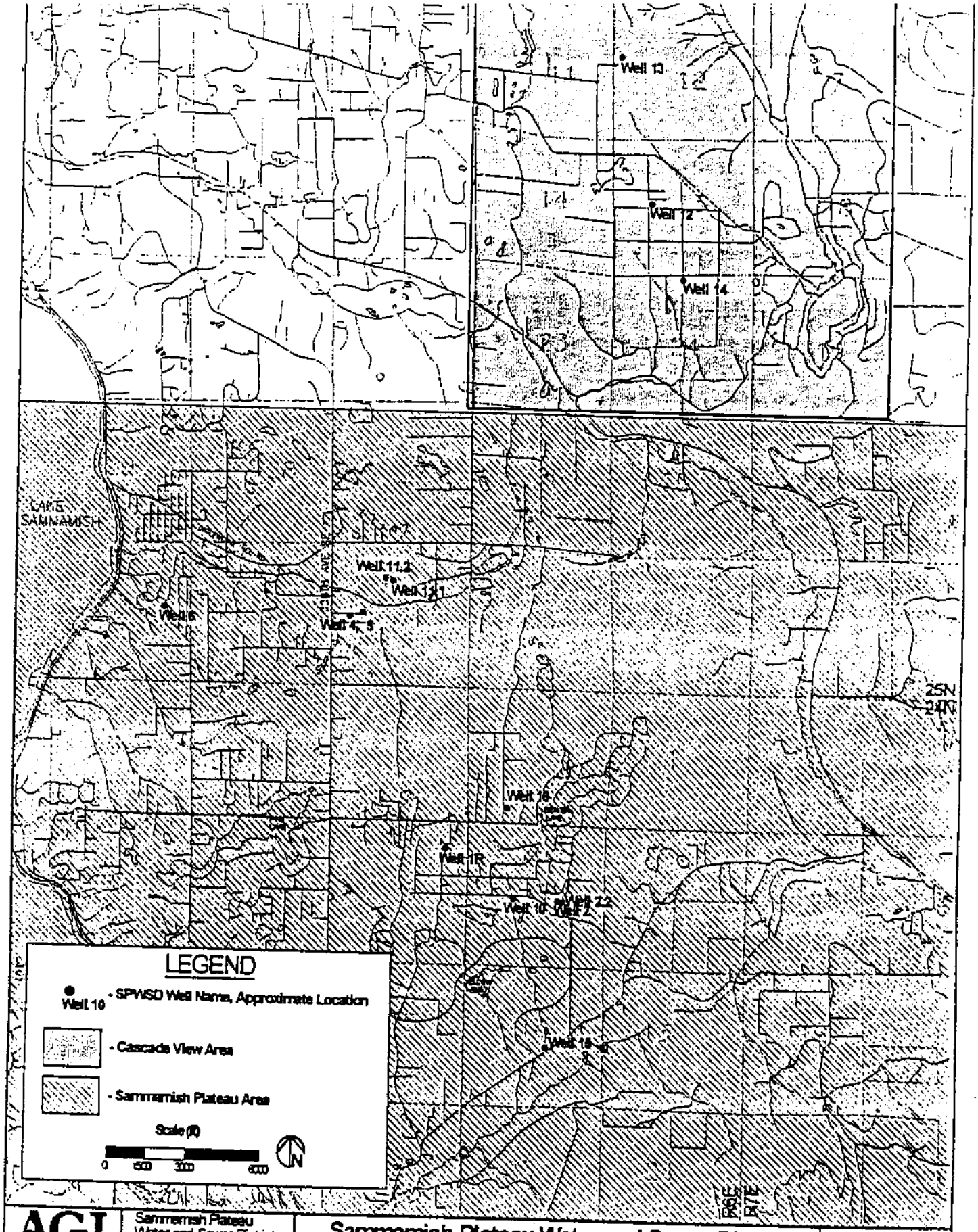

AGI TECHNOLOGIES

Sammamish Plateau Water and Sewer District Wellhead Protection
Project No. - 15,287.015

Sammamish Plateau Water and Sewer District Production Well Location Map

Figure 1.1

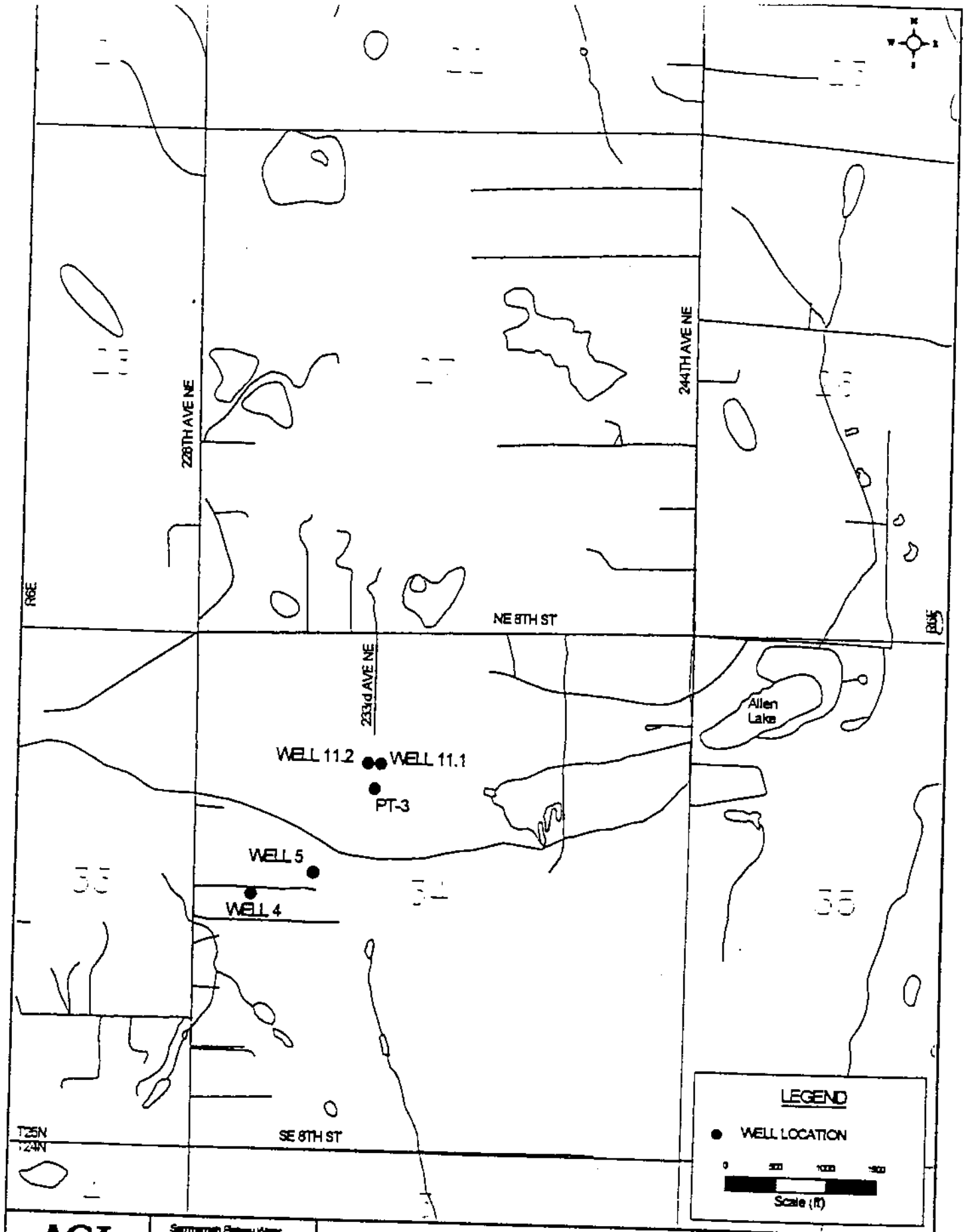

AGI TECHNOLOGIES

Sammamish Plateau Water and Sewer District
Aldi 11.2 Development/Testing
Project #: 15,267.008

Location Map

Figure 1

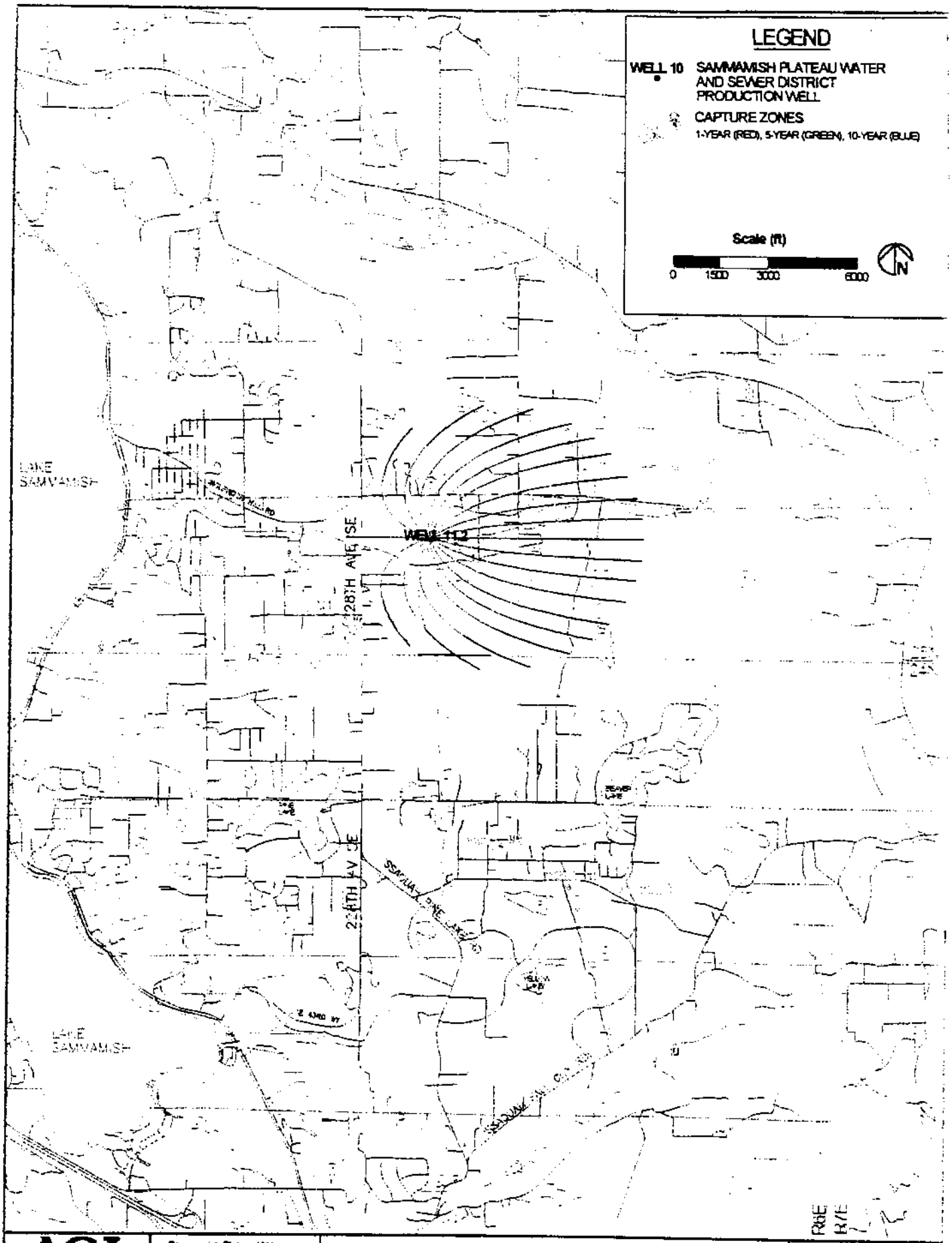

AGI TECHNOLOGIES

Sammamish Plateau Water and Sewer District
Well 11.2 Development/Testing
Project # 15,287.008

Well 11.2 Wellhead Protection Area

Figure 9

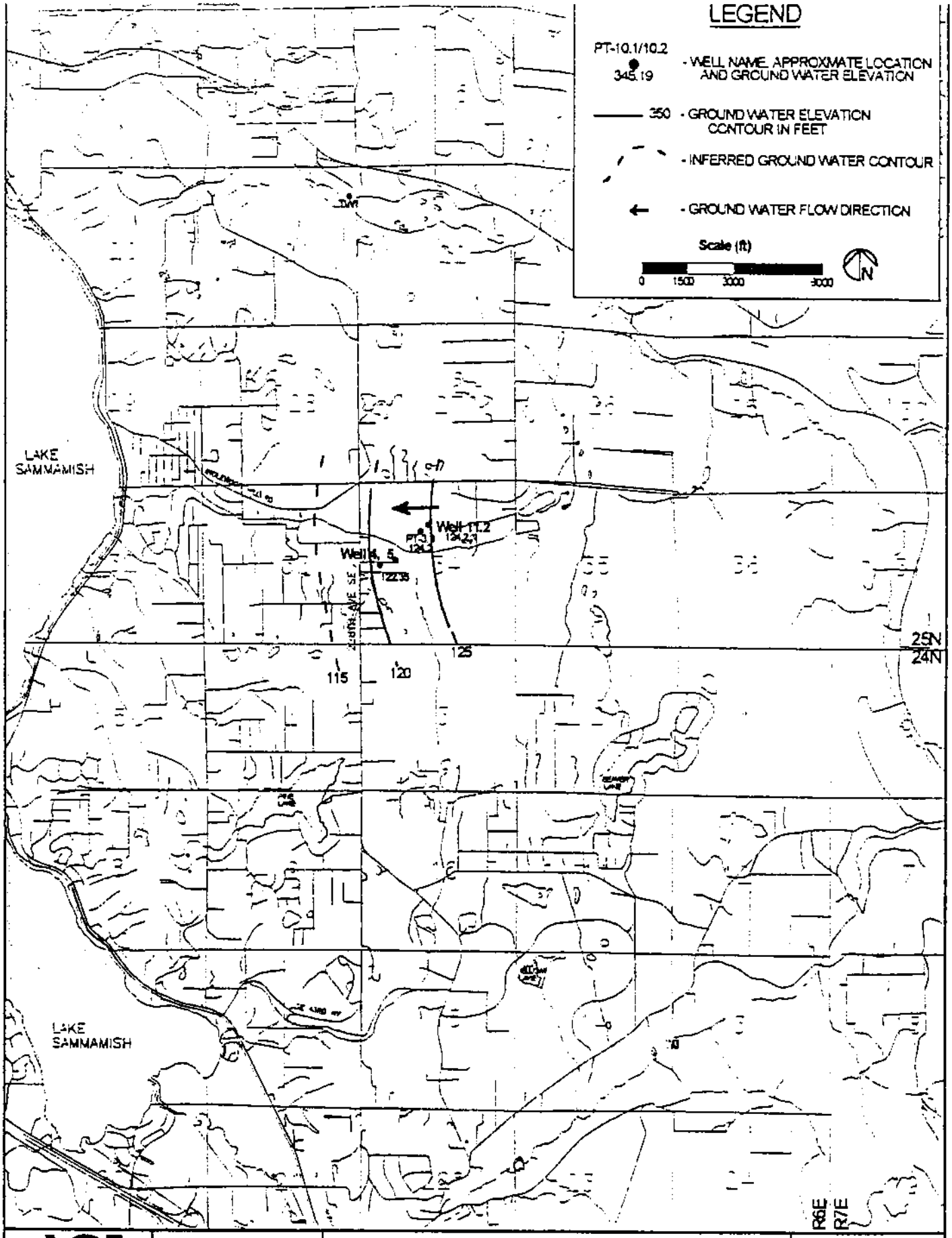

AGI TECHNOLOGIES	Sammamish Plateau Water and Sewer District Aldi 11.2 Development/Testing Project # 15,287.006	Aquifer Zone IV Potentiometric Surface Map	Figure 8

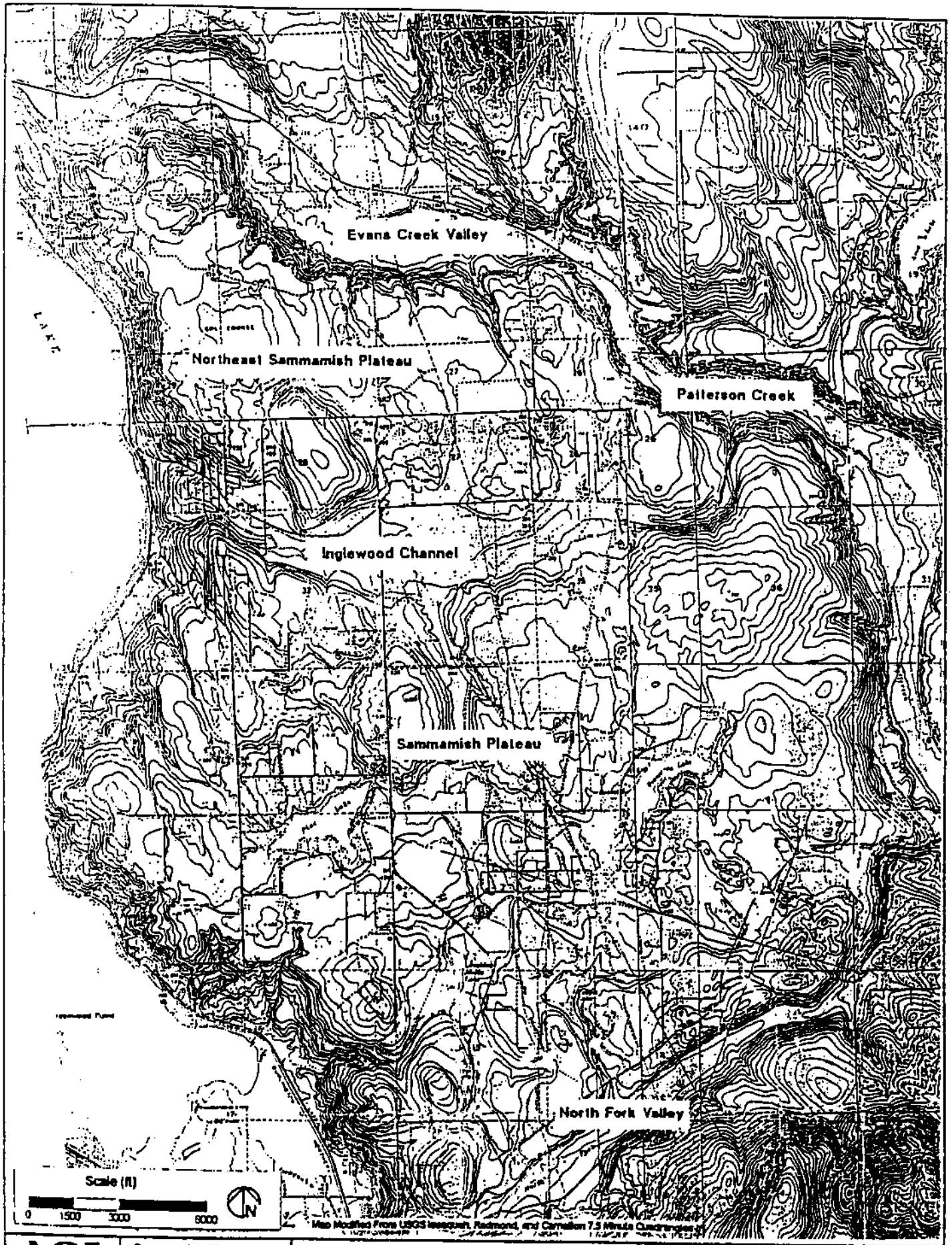

AGI TECHNOLOGIES

Sammamish Plateau
Water and Sewer District
Wellhead Protection
Project No. - 15,287 015

Topography - Plateau Area

Figure 2.3

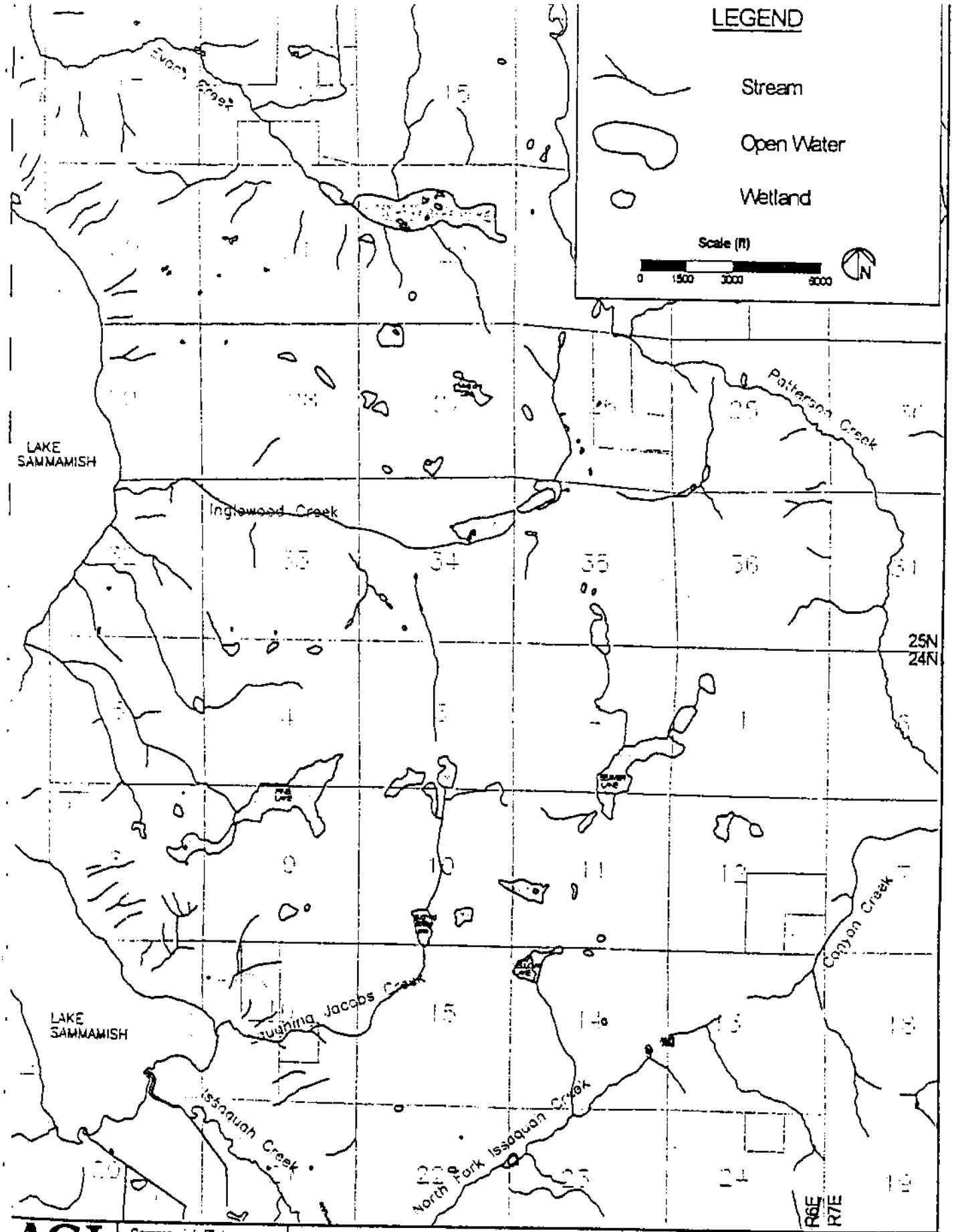

AGI TECHNOLOGIES

Sammamish Plateau Water and Sewer District Wellhead Protection
Project No. - 15,287 015

Surface Water Features - Plateau Area

Figure 3.1

File Original and First Copy with Department of Ecology
Second Copy—Owner's Copy
Third Copy—Driller's Copy

WATER WELL REPORT

STATE OF WASHINGTON

Start Card No. bc-16284
UNIQUE WELL I.D. # AAD382
Water Right Permit No. G1-26572

1) OWNER: Name Sammamish Plateau Water and Sewer District Address 1510 228th Ave SE, Issaquah, WA 98027

(2) LOCATION OF WELL: County King NW ¼ NW ¼ Sec 34 T 25 N., R 6E W.M.

2a) STREET ADDRESS OF WELL (or nearest address) Lake Washington School Dist. No. 414, Redmond, WA

(3) PROPOSED USE: ☐ Domestic ☐ Irrigation ☐ DeWater Industrial ☐ Test Well ☐ Municipal ☒ Other ☐

4) TYPE OF WORK: Owner's number of well (if more than one) 11.2
Abandoned ☐ New well ☒ Deepened ☐ Reconditioned ☐
Method: Dug ☐ Cable ☒ Rotary ☒ Bored ☐ Driven ☐ Jetted ☐

(5) DIMENSIONS: Diameter of well 16 inches.
Drilled 885 feet. Depth of completed well 884 ft.

6) CONSTRUCTION DETAILS:
Casing installed: 24" Diam. from 0 ft. to 352 ft.
Welded ☒ 20" Diam. from 0 ft. to 630 ft.
Liner installed ☐ Threaded ☐ 16" Diam. from +2.0 ft. to 705 ft.

Perforations: Yes ☐ No ☒
Type of perforator used
SIZE of perforations in. by in.
perforations from ft. to ft.
perforations from ft. to ft.
perforations from ft. to ft.

Screens: Yes ☒ No ☐
Manufacturer's Name Johnson
Type 304 Stainless Model No. PS
Diam. 8 inch Slot size .030 from 785 ft. to 821 ft.
Diam. 8 inch Slot size .030 from 839 ft. to 880 ft.

Gravel packed: Yes ☒ No ☐ Size of gravel CSS 8-12
Gravel placed from 648 ft. to 884 ft.

Surface seal: Yes ☒ No ☐ To what depth? 43 ft.
Material used in seal Cement
Did any strata contain unusable water? Yes ☐ No ☐
Type of water? Depth of strata
Method of sealing strata off

(7) PUMP: Manufacturer's Name
Type: H.P.

(8) WATER LEVELS: Land-surface elevation above mean sea level 360 ft.
Static level 235 ft. below top of well Date 8/6/93
Artesian pressure lbs. per square inch Date
Artesian water is controlled by (Cap, valve, etc.)

(9) WELL TESTS: Drawdown is amount water level is lowered below static level
Was a pump test made? Yes ☐ No ☐ If yes, by whom?
Yield: gal./min. with ft. drawdown after hrs.
" " " "
" " " "

Recovery data (time taken as zero when pump turned off) (water level measured from well top to water level)

Time	Water Level	Time	Water Level	Time	Water Level

Date of test
Bailer test gal./min. with ft. drawdown after hrs.
Airtest gal./min. with stem set at ft. for hrs.
Artesian flow g.p.m. Date
Temperature of water Was a chemical analysis made? Yes ☐ No ☐

(10) WELL LOG or ABANDONMENT PROCEDURE DESCRIPTION

Formation: Describe by color, character, size of material and structure, and show thickness of aquifers and the kind and nature of the material in each stratum penetrated, with at least one entry for each change of information.

MATERIAL	FROM	TO
Hardpan	0	4
Silthound Gravels, Brown	41	6
Silthound Sands and Gravels, Brown	61	8
Silthound Sands and Gravels, Redish-Brown	82	11
Silthound Sands and Gravels, Brown	112	170
Silthound Sands and Gravels, Brown; WB	170	185
Loose Sands and Gravels, WB	185	200
Sands and Gravels with trace Silt	200	205
Sands and Gravels with Silt	205	212
Sands, Gravels, and Cobbles	212	219
Silty Clay with Peat and Gravels	219	228
Silthound Sands	228	233
Silthound Sands and Gravels	233	278
Silthound Gravels and Cobbles	278	296
Silthound Sands, Gravels and Cobbles	296	323
Silthound Sands and Gravels	323	358
Silthound Sands, Gravels and Cobbles	358	369
Silthound Sands and Gravels	369	394
Silty Sands, Gravels and Cobbles	394	417
Sands and Gravels with trace of Silt	417	434
Silty Sands, Gravels and Cobbles	434	465
Sands and Gravels	465	471
Silthound Sands and Gravels	471	475
Loose Sands with trace Gravels	475	494
Fine Sands with Trace Gravels and Cobbles	494	505
Fine Silty Sands with trace Gravels and Cobbles	505	520
Silthound Sands, Grey	520	560
Continued on next form pages		
Note: Final development and testing has not been done as of completion date.		

Work started 4/7/93, 19. Completed 8/6/93, 19

WELL CONSTRUCTOR CERTIFICATION:

I constructed and/or accept responsibility for construction of this well, and its compliance with all Washington well construction standards. Materials used and the information reported above are true to my best knowledge and belief.

NAME Holt Drilling, Inc. (PERSON, FIRM, OR CORPORATION) (TYPE OR PRINT)
Address 10621 Todd Road East, Puyallup, WA 98372
(Signed) [signature] (WELL DRILLER) License No. 1094
Contractor's Registration No. [illegible] Date [illegible]

USE ADDITIONAL SHEETS IF NECESSARY

File Original and First Copy with Department of Ecology
Second Copy—Owner's Copy
Third Copy—Driller's Copy

WATER WELL REPORT

STATE OF WASHINGTON

Start Card No. [illegible]
W-16284
UNIQUE WELL I.D. # AAD382
Water Right Permit No. G1-26572

(1) OWNER: Name Sammamish Plateau Water and Sewer District Address 1510 228th Ave SE, Issaquah, WA 98027

(2) LOCATION OF WELL: County King NW ¼ NW ¼ Sec. 34 T. 25 N., R. 6E W.M.

(2a) STREET ADDDRESS OF WELL (or nearest address) Lake Washington School District No. 414, Redmond, Washington

(3) PROPOSED USE: ☐ Domestic ☐ Irrigation ☐ DeWater Industrial ☐ Test Well ☐ Municipal ☒ Other ☐

(4) TYPE OF WORK: Owner's number of well (if more than one) 11.2

Abandoned ☐ New well ☒ Deepened ☐ Reconditioned ☐ Method: Dug ☐ Cable ☒ Rotary ☒ Bored ☐ Driven ☐ Jetted ☐

(5) DIMENSIONS: Diameter of well 16 inches.
Drilled 885 feet. Depth of completed well 884 ft.

(6) CONSTRUCTION DETAILS:

Casing installed: ____ " Diam. from ____ ft. to ____ ft.
Welded ☐ ____ " Diam. from ____ ft. to ____ ft.
Liner installed ☐ ____ " Diam. from ____ ft. to ____ ft.
Threaded ☐

Perforations: Yes ☐ No ☐
Type of perforator used ____
SIZE of perforations ____ in. by ____ in.
____ perforations from ____ ft. to ____ ft.
____ perforations from ____ ft. to ____ ft.
____ perforations from ____ ft. to ____ ft.

Screens: Yes ☐ No ☐
Manufacturer's Name ____
Type ____ Model No. ____
Diam. ____ Slot size ____ from ____ ft. to ____ ft.
Diam. ____ Slot size ____ from ____ ft. to ____ ft.

Gravel packed: Yes ☐ No ☐ Size of gravel ____
Gravel placed from ____ ft. to ____ ft.

Surface seal: Yes ☐ No ☐ To what depth? ____ ft.
Material used in seal ____
Did any strata contain unusable water? Yes ☐ No ☐
Type of water? ____ Depth of strata ____
Method of sealing strata off ____

(7) PUMP: Manufacturer's Name ____
Type: ____ H.P. ____

(8) WATER LEVELS: Land-surface elevation above mean sea level ____ ft.
Static level ____ ft. below top of well Date ____
Artesian pressure ____ lbs. per square inch Date ____
Artesian water is controlled by ____ (Cap, valve, etc.)

(9) WELL TESTS: Drawdown is amount water level is lowered below static level
Was a pump test made? Yes ☐ No ☐ If yes, by whom? ____
Yield: ____ gal./min. with ____ ft. drawdown after ____ hrs.
" " " "
" " " "

Recovery data (time taken as zero when pump turned off) (water level measured from well top to water level)

Time	Water Level	Time	Water Level	Time	Water Level

Date of test ____
Bailer test ____ gal./min. with ____ ft. drawdown after ____ hrs.
Airtest ____ gal./min. with stem set at ____ ft. for ____ hrs.
Artesian flow ____ g.p.m. Date ____
Temperature of water ____ Was a chemical analysis made? Yes ☐ No ☐

(10) WELL LOG or ABANDONMENT PROCEDURE DESCRIPTION

Formation: Describe by color, character, size of material and structure, and show thickness of aquifers and the kind and nature of the material in each stratum penetrated with at least one entry for each change of information.

MATERIAL	FROM	TO
Continued from previous form		
~~Silty, Clay Grey~~	~~560~~	~~620~~
~~Sands, WB~~	~~620~~	~~624~~
Silty, Clay, Gray	624	654
Sandy Silt, Gray	654	661
Silty Sands with trace Wood	661	680
Silt, Gray	680	688
Sandy Silt, some Gravels and wood, Gray	688	709
Silty Sands and Gravels, some Cobbles, Gray	709	729
Silty sands and Gravels, Gray	729	740
Silty Sands, some Gravels and wood, Gray	740	749
Silty Sands, and Grav els, Gray	749	781
Sands and Gravels, Gray	781	790
Sands, Gravels and Cobbles, Gray	790	814
Clay, few Gravels, Gray	814	819
Silty sands, some Gravels and wood, Gray	819	825
Silty Sands and Gravels, Gray	825	845
S ands, Gravels and Cobbles, Gray	845	884

Work started 4/7/93, 19. Completed 8/6/93, 19

WELL CONSTRUCTOR CERTIFICATION:

I constructed and/or accept responsibility for construction of this well and its compliance with all Washington well construction standards. Materials used and the information reported above are true to my best knowledge and belief.

NAME Holt Drilling, Inc. (PERSON, FIRM, OR CORPORATION) (TYPE OR PRINT)

Address 10621 Todd Road East, Puyallup, 98372

(Signed) [signature] (WELL DRILLER) License No. 1099

Contractor's Registration No. HOLTDI*13606 Date 4-20 19

USE ADDITIONAL SHEETS IF NECESSARY

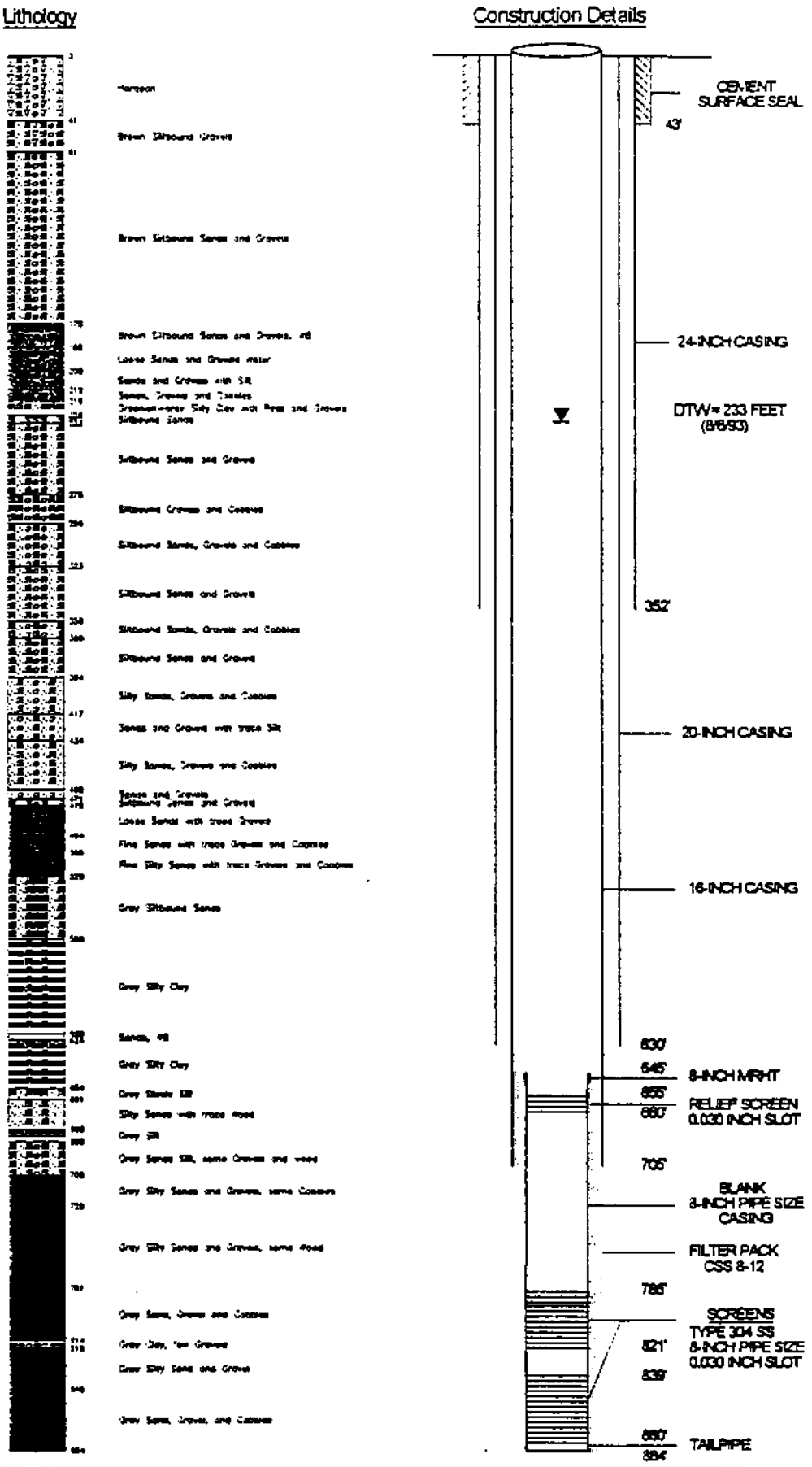

AGI TECHNOLOGIES

Sammamish Plateau Water and Sewer District
Well 11.2 Development/Testing
Project # 15,257.008

Lithologic Log and Construction Details

Figure 2

AGI TECHNOLOGIES

PRODUCTION WELL 11.2
CONSTRUCTION AND TESTING REPORT
SAMMAMISH PLATEAU WATER AND SEWER DISTRICT

SUMMARY

Well 11.2 is located on the north side of the Eastlake High School campus, approximately 25 feet from Sammamish Plateau Water and Sewer District (District) Well 11.1. It is completed at a depth of 884 feet in a sand and gravel aquifer designated Zone IV of the Plateau Aquifer System. Water quality is excellent and meets all Washington State Department of Health (DOH) requirements for a potable water source.

Test pumping results indicate Well 11.2 is capable of producing 2,000 gallons per minute (gpm). At a pumping rate of 973 gpm for 24 hours, the drawdown was 51 feet for a specific capacity of 19 gallons per minute per foot (gpm/ft). The aquifer transmissivity is about 38,000 gallons per day per foot (gpd/ft).

Water level monitoring during the 24-hour pumping test showed no interference on water levels in monitoring Wells PT-3.1 and 3.2, Well 11.1, or other nearby wells completed in zones above the Zone IV Aquifer. The Washington State Department of Ecology (Ecology) has issued a permit for 500 gpm and 565 acre feet per year (af/yr) from this well. Currently, the District is monitoring water levels to record possible interference from other wells and the seasonal water level changes in this aquifer.

BACKGROUND

Property owner:	Lake Washington School District
Well owner:	Sammamish Plateau Water and Sewer District
Hydrogeologist:	AGI Water Resources Group, Scott Coffey
Drilling contractors:	Holt Drilling, Inc.; Schneider Drilling Co., Inc.
Drilling method:	Cable-tool, fluid-rotary
Start date:	April 7, 1993
Completion date:	August 6, 1993
Pumping test date:	August 30, 1995

PERMITS AND APPLICATIONS

Copies of the water right application and preliminary permit are included in the **Appendix.**

Unique Well ID number:	AAD382
Start card number:	16284
Water right permit number:	G1-26572P
Instantaneous:	500 gpm
Annual:	565 af/yr
Continuous equivalent:	350 gpm

OBJECTIVES

The objectives of constructing this well were to:

- Create additional supply for the District with a 16-inch production well capable of sustained yields of 500 gpm or more from the deep aquifer identified during the drilling of Test Well PT-3.
- Characterize the deep aquifer and aquitard zones encountered and determine potential interference with other District production wells.

Desired yield:	500 gpm or more
Target aquifer:	Plateau Aquifer Zone IV
Required quality:	Potable

WELL SITE

The well site, illustrated in **Figure 1**, is located 50 feet south of the dead end on 233rd Avenue NE. Access to the site is through the Eastlake High School parking lot to the baseball fields.

Map location/coordinates: T25N/R6E/NW4NW4/Section 34

County: King

Ground surface elevation: 355.86 ft. msl

COMPLETION RECORD

Well 11.2 is completed in accordance with WAC 173-160, effective May 5, 1988, and meets all requirements for a State of Washington Group A public supply well. The well completion record is illustrated in **Figure 2** and described on the Water Well Report (Form ECY 050-1-20) in the **Appendix.**

Total depth drilled: 885 ft.

Completion depth: 884 ft.

Surface Seal

Depth of seal: 43 ft.

Type of seal: Cement

Casing Record

Cable-tool drilling began in April, 1993 with a temporary 30-inch surface seal casing to a depth of 43 feet. Drilling continued with 24-inch casing to 352 feet, 20-inch casing to 630 feet, and 16-inch casing to 705 feet. Below 705 feet, 16-inch drilling advanced to a total depth of 885 feet using fluid-rotary drilling methods. An 8-inch pipe-size, 0.030-inch slot, stainless-steel screen assembly was sand packed into position adjacent to water-bearing sediments encountered between depths of 785 and 880 feet.

Casing Depth	Diameter	Description
0 to 352 ft.	24-inch	mild-steel
0 to 630 ft.	20-inch	mild-steel
+2.0 to 705 ft.	16-inch	mild-steel

Screen Assembly

A continuous wrap, wire-wound, welded well screen manufactured by Johnson Division of Wheelabrator Corporation was installed as listed below:

Screen Depth	Diameter	Description
645 to 646 ft.	8-inch, PS	right-hand threaded nipple
646 to 655 ft.	8-inch, PS	blank, mild-steel casing
655 to 660 ft.	8-inch, PS	type 304, 0.030-inch slot, stainless-steel relief screen
660 to 785 ft.	8-inch, PS	blank, mild-steel casing
785 to 821 ft.	8-inch, PS	type 304, 0.030-inch slot, stainless-steel well screen
821 to 839 ft.	8-inch, PS	blank, mild-steel casing
839 to 880 ft.	8-inch, PS	type 304, 0.030-inch slot, stainless-steel well screen
880 to 884 ft.	8-inch, PS	blank, mild-steel casing with plate bottom

Filter Media

Filter pack: Colorado Silica Sand (CSS) 8-12 placed from 645 to 884 ft.

HYDROGEOLOGIC LOG

The hydrogeologic log is illustrated in **Figure 3** and described in the Water Well Report in the **Appendix**. Three significant water-bearing zones were encountered at Well 11.2.

The shallowest water-bearing zone encountered is at a depth of 170 feet, where tight sand and gravel grades to loose, clean sand and gravel at 185 feet. These clean sands and gravels persist to a depth of 200 feet, where they become slightly silty with increased cobble content. Between 219 and 394 feet, the sediments are not water-bearing. They consist primarily of silt-bound sand and gravel. A layer of thin, silty clay with peat is found between depths of 219 and 228 feet.

At 394 feet, another water-bearing sand, gravel, and cobble zone is present to a depth of 520 feet. One thin, silt-bound layer is present from 471 to 475 feet. Well 11.1 is 25 feet east of Well 11.2 and is completed between depths of 409 and 489 feet in that zone.

The third, most significant water-bearing zone was encountered between depths of 709 and 884 feet. This zone consists of sand, gravel, and cobbles with varying amounts of silt content.

GEOPHYSICAL LOG(S)

Geophysical logs are a useful tool for indicating potential water-bearing zones. However, they neither assure the presence of water or quantify the amount of water available. The electric log, illustrated in **Figure 3**, shows the measured amount of electrical resistance caused by various strata as electrical current passes through them. This log is a useful tool for comparison with the lithologic log and field notes in determining screen placement. Resistivity values greater than 1,000 ohm-feet generally indicate good aquifer material. In Well 11.2, electrical resistance was measured at 2.5-foot intervals in the lower water-bearing zone found between depths of 709 to 885 feet. Resistivity values averaging 1,000 ohm-feet indicated potentially good water-bearing materials between depths of 790 and 813 feet. From 840 to 873 feet, the resistivity values increased to an average of 1,200 ohm feet, indicating greater water-bearing potential.

STATIC WATER LEVELS

Static water level data from Zone IV wells indicate a ground water gradient of about 0.002 to the west. The static water level is measured below ground surface (bgs) and shown in **Table 1** below:

Screen depth: 785 to 880 ft.

Measuring point stickup: 2.15 ft.

Measuring point elevation: 358.01 ft. (TOC 16")

Table 1
Measured Static Water Levels at Well 11.2

Date	Static Water Level (ft. bgs)	Water Level Elevation (ft. msl)
August 24, 1995	234.42	123.59
August 25, 1995	237.72	120.29
August 28, 1995	236.65	121.36
August 29, 1995	232.85	125.16

PUMPING TEST

A pumping test was conducted at Well 11.2 on August 29 and 30, 1995. The purposes of this test were to:

- Determine the performance characteristics and optimum yield of the well.
- Confirm the well completion in Aquifer Zone IV by noting interference to pumping in nearby wells in the same aquifer.
- Determine the water quality and evaluate the lateral extent of Aquifer Zone IV by monitoring water level changes in the Plateau wells.

Pre-test Development

After the completion of Well 11.2 in August 1993, final development was delayed due to the start of the school year. Because of the short period of time allotted for final development and the long period since the completion of the well, the entire screen section of Well 11.2 was water jet developed prior to testing.

Two days of water jet/pump development accompanied by short pumping tests did not significantly increase the well's specific capacity of 22 gpm/ft of drawdown (gpm/ft-dd). The following day a line-shaft turbine pump was installed in Well 11.2 for a 24-hour pumping test. The results of this test are shown below.

Pumping Test Results

Results of the pumping test in Aquifer Zone IV at Well 11.2 are illustrated in **Figures 4, 5, 6, and 7.** To conduct the test, a line shaft turbine pump was installed in the well to a depth of 343 feet. The results of this 24-hour pumping test are:

Screened zone:	*785 to 880 ft.*
Test date:	August 29-30, 1995
Initial water level:	232.85 ft. below measuring point
Discharge rate (Q):	973 gpm
Pumping duration:	24 hrs

Drawdown: 51.01 ft.

Specific capacity: 19 gpm/ft.-dd

Transmissivity

Transmissivity is a measure of permeability for the full aquifer thickness. It is the amount of water that flows through a vertical, one-foot wide strip of the aquifer in one day (under unit gradient). The average transmissivity can be calculated from the drawdown, recovery, T/t', and distance drawdown data shown in **Figures 4** and **5**. Aquifer Zone IV at Well 11.2 has an average transmissivity of 38,000 gpd/ft.

Interference

To note interference with nearby production and monitoring wells, Production Well 5 (Zone IV) and the three completions in Well PT-3 (Zones I, II, and IV) were monitored during the 24-hour test.

Figures 6 and **7** show hydrographs of the nearby wells during and after the 24-hour pumping test at Well 11.2. The hydrographs in **Figure 6** indicate no interference in Aquifer Zones I, II, and III at PT-3.1, PT-3.2, and Well 11.1 during the 24-hour test. The lack of response in any of these wells during the test indicates Well 11.2 is hydraulically isolated from water-bearing Zones II and III monitored during the test at PT-3.1, PT-3.2, and Well 11.1.

Wells whose water levels were impacted by pumping are shown in **Figure 7**. Well 5, approximately 4,000 feet to the southwest in Aquifer Zone IV, responded to the test with a total of 16 feet of drawdown. PT-3.3, 180 feet to the south and also completed in Aquifer Zone IV, responded to the test with a total of 27.5 feet of drawdown. The response at the observation wells in Zone IV suggests Well 11.2 is completed in Zone IV.

WATER QUALITY

During testing, water pumped from Well 11.2 was sand free, clear, odorless, and tasteless. Water samples were collected for both field and laboratory analyses.

Field Analyses

Field analyses of selected water quality parameters were performed during the 24-hour pumping test. These results are summarized below:

Date	Specific Conductance (μmhos/cm)	pH (°F)	Temperature (NTU)	Turbidity (mg/L)	Hardness (mg/L)	Iron
8/30/95	156.6	7.15	53.6	0.45	65	0.02

Laboratory Analyses

Samples for laboratory analysis were collected after pumping 23 hours at 973 gpm. Laboratory reports are included in the **Appendix**.

Inorganic Test Results

A sample for inorganic chemical analysis was collected August 30, 1995 after pumping 23 hours. The analysis, performed by Water Management Laboratories Inc., shows all primary and secondary parameters to be under maximum contaminant levels.

The complete results are summarized on **Table 2**. **Table 2** compares the inorganic results with those of Wells 4 and 5, completed in Aquifer Zone IV. The comparison shows the water quality results from the three wells to be nearly identical, suggesting Well 11.2 is completed in Aquifer Zone IV.

Volatile Organic Test Results

The results of the volatile organic analysis, completed by Water Management Laboratories Inc., revealed no detectable levels of either regulated or non-regulated volatile organic compounds.

Bacteriological Test Results

The bacteriological test, completed by Water Management Laboratories Inc., showed coliform bacteria present. The bacteria sample was taken at the open discharge orifice at the end of approximately 1,000 feet of lay-flat pipe. The lay-flat pipe was not sterilized before testing and most likely caused the sample to become contaminated.

Table 2
Comparison of Inorganic Test Results

Parameter	Well 4	Well 5	Well 11.2
Date Received	3/2/93	3/2/93	8/30/95
Arsenic mg/L	<0.01	<0.01	<0.01
Barium mg/L	<.10	<.10	<.10
Cadmium mg/L	<0.002	<0.002	<0.002
Chromium mg/L	<0.05	<0.05	<0.01
Iron mg/L	<0.05	<0.05	<0.03
Lead mg/L	<0.002	<0.002	<0.002
Manganese mg/L	<0.043	<0.041	<0.036
Mercury mg/L	<0.0002	<0.0002	<0.0005
Selenium mg/L	<0.005	<0.005	<0.005
Silver mg/L	<0.01	<0.01	<0.01
Sodium mg/L	9	7.7	6
Hardness mg/L as $CaCo^3$	65	65	70
Conductivity µmhos	160	150	147
Turbidity NTU	0.17	0.15	0.4
Color Units	5	5	<5
Fluoride mg/L	<0.50	<0.50	<0.02
Nitrate mg/L	<1.0	<1.0	.20
Chloride mg/L	<20	<20	2
Sulfate mg/L	<10	<13	1
TDS mg/L	–	–	105
Copper mg/L	<0.02	<0.02	<0.02
Zinc mg/L	<0.05	<0.05	<.05

Radionuclide Test Results

Analysis of radionuclides by the State of Washington Department of Health Radiation Laboratories shows the radiation and radon levels are well below the maximum contaminant levels (mcls).

Parameter	Level	MCL
Gross Alpha:	<3.0 pCi/L	none
Gross Beta:	<4.0 pCi/L	50 pCi/L
Radon-222:	115 +/- 20 pCi/L	300 pCi/L (recommended mcl)

OPTIMUM YIELD

Optimum yield is the maximum amount of water a well can safely produce. It is the product of the long-term specific capacity and safe drawdown. Safe drawdown allows for pump submergence requirements and seasonal and other natural water level changes, including interference from other sources.

Details of the optimum yield calculation for Well 11.2 are included in the **Appendix.**

Safe drawdown:	105 ft.
Long-term specific capacity (SC):	19 gpm/ft-dd
Safe yield (s x SC):	2,000 gpm

CAPTURE ZONE

Wellhead Protection Area (WHPA)

A WHPA is defined as the surface and subsurface area surrounding a public water supply well through which potential contaminants are likely to pass before reaching a production well. In Washington, WHPAs are defined by the time of travel (TOT) for ground water to move from its point of infiltration to its point of discharge at the well. The 10-year TOT boundary forms the boundary of the WHPA and defines the area to be inventoried and managed to reduce the risk of potential contamination.

The purpose of a WHPA delineation is to describe the size and shape of that portion of the aquifer contributing ground water to the well. This area is known as the well's **Capture Zone.** Data are usually insufficient to completely and accurately define the exact size and shape of the capture zone. The Washington State Department of Health (DOH)

has adopted four methods to delineate a WHPA. In order of increasing complexity, they are:

- Calculated Fixed Radius
- Analytical Models
- Hydrogeologic Mapping
- Numerical Flow/Transport Models

A preliminary delineation is now required for all new public water supply wells. The calculated fixed radius method is normally used before the well is constructed and tested.

Because it has more than 1,000 service connections, the District must use an analytical model or better to delineate its WHPA. Data are available to the District to allow this level of delineation for Well 11.2.

Capture Zone Analysis

The EPA has developed a set of analytical models that utilize aquifer properties to calculate the boundaries of the capture zones for a well based on continuous pumping at a particular rate. The pumping rate input to the model is reduced from Well 11.2's instantaneous rate of 2,000 gpm to the continuous rate required (350 gpm) to pump the annual water right of 565 acre feet. DOH requires determination of capture zones for 1-, 5-, and 10-year TOT for each well. The EPA WHPA analytical model GPTRAC was used to calculate the capture zones for Well 11.2.

The shape of the capture zone is determined by the aquifer's hydrologic properties and the direction and gradient of the ground water flow in the aquifer. The flow direction in aquifer Zone IV at Well 11.2 is to the west, as shown on **Figure 8**. The gradient of 0.002 in the Zone IV aquifer is estimated from limited water level data. The 1-, 5-, and 10-year TOT capture zones for Well 11.2 are illustrated on **Figure 9**. The capture zone is elongated to the east, indicating that the well draws its water primarily from the upgradient direction.

Although the capture zone covers a significant area around Well 11.2, its susceptibility to contamination is very low due to its depth and the low permeability sediments overlying the aquifer (see **Figure 2**).

Health
Environmental Health

WATER FACILITIES INVENTORY (WFI)

Read Instructions on back before completing

SYSTEM ID NO.	2. COUNTY	GROUP	TYPE	WRIA
400000	KING	A	COMM	

1. SYSTEM NAME: SAMMAMISH PLATEAU WATER & SEWER

STREET ADDRESS: 1510 228TH AVE SE

P.O. BOX (IF APPLICABLE):

CITY: ISSAQUAH | STATE: WA | ZIP CODE: 98027

OWNER'S NAME (LAST, FIRST): SAMMAMISH PLATEAU WATER & | OWNER NO.: 3007

STREET ADDRESS: 1510 228TH AVE SE

P.O. BOX (IF APPLICABLE):

CITY: ISSAQUAH | STATE: WA | ZIP CODE: 98027

4. SYSTEM CONTACT PERSON: RONALD E. LITTLE - MANAGER | TITLE:

DAY TELEPHONE: 425-392-6256 | EVENING TELEPHONE:

WFI COMPLETED BY | TITLE

DAY TELEPHONE | DATE

3. SUBMITTED FOR: [ ] NEW SYSTEM [ ] NO CHANGE [ ] REACTIVATE [ ] SYSTEM NAME CHANGE* [ ] UPDATE [ ] DELETE

*OLD SYSTEM NAME - ENTER ONLY IF CHANGING WITH THIS WFI

SYSTEMS SERVING ANY RESIDENTS (PEOPLE LIVING IN A DWELLING SERVED BY THE SYSTEM), COMPLETE THIS SECTION

9. NUMBER ACTIVE RESIDENTIAL CONNECTIONS: 11080

10. NUMBER ACTIVE RESIDENTIAL POPULATION: 33,240

SYSTEMS SERVING ANY NON-RESIDENTS (I.E., TRAVELERS, EMPLOYEES, STUDENTS, ETC.), COMPLETE THIS SECTION

11. NUMBER NON-RESIDENTIAL CONNECTIONS:

12. ENTER AVERAGE DAILY NON-RESIDENTIAL POPULATION SERVED FOR EACH MONTH. MAKE ENTRY FOR EACH MONTH

JAN.	APR.	JULY	OCT.
FEB.	MAY	AUG.	NOV.
MAR.	JUNE	SEP	DEC.

13. DOES THE SYSTEM SERVE AT LEAST 25 OF THE SAME NON-RESIDENTS FOR 4 OR MORE DAYS PER WEEK FOR AT LEAST 180 DAYS PER YEAR?

[ ] YES [X] NO

14. TOTAL NUMBER CONNECTIONS METERED: 11,080

15. DISTRIBUTION RESERVOIR(S) TOTAL CAPACITY: 13,125,000 GALLONS

6. OWNERSHIP (CHECK ONE ONLY)

- [ ] PRIVATE: NON-PROFIT
- [ ] PRIVATE: FOR-PROFIT
- [X] LOCAL GOVERNMENT (COUNTY / CITY / PUD / WATER DISTRICT)
- [ ] STATE
- [ ] FEDERAL

7. PREDOMINANT CHARACTERISTIC (CHECK ONE ONLY)

- [X] RESIDENTIAL
- [ ] RECREATIONAL
- [ ] BUSINESS / INDUSTRIAL / AGRICULTURAL / COMMERCIAL
- [ ] LODGING / FOOD SERVICE
- [ ] SCHOOL / DAY CARE
- [ ] OTHER (CHURCHES, ETC.)

16. DOH SOURCE NUMBER	17. SOURCE NAME (LIST UTILITY'S NAME FOR SOURCE. IF SOURCE IS PURCHASED OR INTERTIED, LIST SELLER'S ID# AND NAME USING FOLLOWING FORMAT: XXXXXX / NAME EXAMPLE: 77050Y / SEATTLE)	18. SOURCE CATEGORY: WELL	WELL FIELD	SURFACE	SPRING	RAINWATER / INF. GAL.	INTERTIE	PURCHASE (TREATED)	PURCHASE (UNTREATED)	19. USE: PERMANENT	SEASONAL	EMERGENCY	20. SOURCE METERED	21. TREATMENT: NONE	CHLORINATION	FILTRATION	FLUORIDATION	OTHER	22. WELL DEPTH (FEET)	23. SOURCE CAPACITY (GPM)	24. SOURCE LOCATION: 1/4, 1/4 SEC.	SEC. NO.	TWP	RNG.	SWTR EVALUATION / VOC EVALUATION
S01	WELL 1	X							X			Y					X	157	500	SW/NE	10	24N	06E	
S02	WELL 2	X								X		Y					X	132	360	NW/SE	11	24N	06E	
S03	WELL # 3	X									X	Y		X				716		NW/SW	34	25N	06E	
S04	WELL # 4	X							X			Y		X				714	750	SW/NW	34	25N	06E	
S05	WELL 6	X									X	Y		X				366		NE/SE	32	25N	06E	
S06	WELL #7	X							X			Y					X	150	2,000	SE/SE	21	24N	06E	
S07	WELL #8	X							X			Y					X	150	3,200	SE/SE	21	24N	06E	
S08	WELL #12	X							X			Y	X					100	200	NW/SW	13	25N	07E	
S09	WELL #13	X							X			Y			X			955	200	SW/NW	12	25N	06E	

MINIMUM REQUIRED BACTERIOLOGICAL SAMPLING SCHEDULE

25. *Note Increase in Coliform Sample Required

26.	JAN	FEB	MAR	APR	MAY	JUN	JUL	AUG	SEP	OCT	NOV	DEC
	40	40	40	40	40	40	40	40	40	40	40	40

APPROVED SERVICES (PER PLANS)

DATE OF LAST SANITARY SURVEY: [illegible] BY DOH [ ] UHO [ ]

SYSTEM IN CRITICAL WATER SUPPLY SERVICE AREA? [ ] YES [ ] NO GW MGMT AREA? [ ] YES [ ] NO FOR UHO USE ONLY

EFFECTIVE DATE RETRO. CHANGES | SIGNATURE OF DOH REVIEWER | DATE

Health
Environmental Health

WATER FACILITIES INVENTORY (W

Read Instructions on back before completing

SYSTEM ID NO.	2. COUNTY	GROUP	TYPE	WRIA
[illegible]	[illegible]	[illegible]	[illegible]	[illegible]

WFI COMPLETED BY | TITLE

DAY TELEPHONE | DATE

SYSTEM NAME: SAMMAMISH PLATEAU WATER & SEWER

STREET ADDRESS

P.O. BOX (IF APPLICABLE)

CITY | STATE | ZIP CODE

OWNER'S NAME (LAST, FIRST) | OWNER NO.

STREET ADDRESS

P.O. BOX (IF APPLICABLE)

CITY | STATE | ZIP CODE

5. SYSTEM CONTACT PERSON | TITLE

DAY TELEPHONE | EVENING TELEPHONE

8. SUBMITTED FOR: NEW SYSTEM | NO CHANGE | REACTIVATE | SYSTEM NAME CHANGE* | UPDATE | DELETE

*OLD SYSTEM NAME - ENTER ONLY IF CHANGING WITH THIS WFI

SYSTEMS SERVING ANY RESIDENTS (PEOPLE LIVING IN A DWELLING SERVED BY THE SYSTEM), COMPLETE THIS SECTION

9. NUMBER ACTIVE RESIDENTIAL CONNECTIONS

10. NUMBER ACTIVE RESIDENTIAL POPULATION

SYSTEMS SERVING ANY NON-RESIDENTS (I.E., TRAVELERS, EMPLOYEES, STUDENTS, ETC.), COMPLETE THIS SECTION

11. NUMBER NON-RESIDENTIAL CONNECTIONS

12. ENTER AVERAGE DAILY NON-RESIDENTIAL POPULATION SERVED FOR EACH MONTH. MAKE ENTRY FOR EACH MONTH

JAN.	APR.	JULY	OCT.
FEB.	MAY	AUG.	NOV.
MAR.	JUNE	SEP.	DEC.

13. DOES THE SYSTEM SERVE AT LEAST 25 OF THE SAME NON-RESIDENTS FOR 4 OR MORE DAYS PER WEEK FOR AT LEAST 180 DAYS PER YEAR?

YES | NO

14. TOTAL NUMBER CONNECTIONS METERED

15. DISTRIBUTION RESERVOIR(S) TOTAL CAPACITY

GALLONS

6. OWNERSHIP (CHECK ONE ONLY)

- PRIVATE: NON-PROFIT
- PRIVATE: FOR-PROFIT
- LOCAL GOVERNMENT (COUNTY / CITY / PUD / WATER DISTRICT)
- STATE
- FEDERAL

7. PREDOMINANT CHARACTERISTIC (CHECK ONE ONLY)

- RESIDENTIAL
- RECREATIONAL
- BUSINESS / INDUSTRIAL / AGRICULTURAL / COMMERCIAL
- LODGING / FOOD SERVICE
- SCHOOL / DAY CARE
- OTHER (CHURCHES, ETC.)

16. DOH SOURCE NUMBER	17. SOURCE NAME (LIST UTILITY'S NAME FOR SOURCE. IF SOURCE IS PURCHASED OR INTERTIED, LIST SELLER'S ID# AND NAME USING FOLLOWING FORMAT: XXXXXX / NAME EXAMPLE: 77050Y / SEATTLE)	18. SOURCE CATEGORY: WELL	WELL FIELD	SURFACE	SPRING	RAINEY / INF. GAL	INTERTIE	PURCHASE-TREATED	PURCHASE-UNTREATED	19. USE: PERMANENT	SEASONAL	EMERGENCY	20. SOURCE METERED	21. TREATMENT: NONE	CHLORINATION	FILTRATION	FLUORIDATION	OTHER	22. WELL DEPTH (FEET)	23. SOURCE CAPACITY (GPM)	24. SOURCE LOCATION: 1/4, 1/4 SEC.	SEC. NO.	TWP	RNG.	SWTR EVALUATION VOC EVALUATION
S10	WELL #14	X										X	Y	X					346	[illegible]	NE/NW	24	25N	06E	
S11	WELL #10	X								X			Y					X	193	600	NE/SW	11	24N	06E	
S12	WELL #11.2	X								X				X					300	2,000	NE/NW	34	25N	06E	

MINIMUM REQUIRED BACTERIOLOGICAL SAMPLING SCHEDULE

25.	26.	JAN	FEB	MAR	APR	MAY	JUN	JUL	AUG	SEP	OCT	NOV	DEC

J. APPROVED SERVICES (PER PLANS) | DATE OF LAST SANITARY SURVEY | BY DOH | LHD

SYSTEM IN CRITICAL WATER SUPPLY SERVICE AREA? YES | NO | GW MGMT AREA? YES | NO | FOR LHD USE ONLY

EFFECTIVE DATE RETRO. CHANGES | SIGNATURE OF DOH REVIEWER | DATE

331-011 Rev. 2/98)

WATER SYSTEM

Please Print Plainly

E HEAVY PENCIL

STATE OF WASHINGTON
DEPARTMENT OF HEALTH
PUBLIC HEALTH LABORATORIES
OFFICE OF RADIATION LABORATORIES
1610 N.E. 150TH ST., SEATTLE, WA 98155-7224

WATER SAMPLE INFORMATION FOR RADIATION ANALYSES

NUMBER	SYSTEM NAME:	SYSTEM I.D. NO.	SYSTEM CLASS (circle one)	SOURCE NUMBER
1 0 1 05137	SAMMAMISH PLATEAU WTR.	409009	A B	well 11, 2

Is this follow up of a previous out of compliance sample? Yes ☐ No ☐

If yes, what was the laboratory number of the previous sample?

COUNTY: KING

well 11, 2 changed by Vic Fitzgerald

SOURCE TYPE: ___ 1. SURFACE ___ 3. WELL ___ 2. SPRING ___ 4. PURCHASE

IF SOURCE IS LAKE OR STREAM, ENTER NAME

IF SAMPLE WAS DRAWN FROM DISTRIBUTION SYSTEM IT WAS COLLECTED FROM SYSTEM AT: (ADDRESS)

DATE OF FINAL REPORT: 09/14/95

	DATE COLLECTED	DATE RECEIVED
1	08/30/95	09/01/95

SEND REPORT TO: (PRINT FULL NAME & ADDRESS)

RON LITTLE
NAME
SAMMAMISH PLATEAU WATER
1510 - 228TH AVE. S.E.
STREET
ISSAQUAH, WA 98027
CITY ZIP CODE

TELEPHONE ( )
AREA CODE

LABORATORY REPORT
(DO NOT WRITE BELOW THIS LINE)

ANALYSES	LESS THAN	RESULTS pCi/L	*MCL pCi/L	COMPLIANCE YES	COMPLIANCE NO	CHEMIST INITIALS
Gross Alpha	<	3.0		✓		
Uranium		.				
Gross Alpha minus Uranium		.	15			
Radium-226		.	3			
Radium-228		.				
Radium-226 Plus Radium-228		.	5			
Radon-222		115 ± 20 pCi/L				JBR
Gross Beta	<	4.0	50	✓		
Strontium-89		.	80			
Strontium-90		.	8			
Cesium-134		.	80			
Iodine-131		.	3			
Tritium			20,000			

*MCL = the maximum contaminant Level Allowed

LABORATORY SUPERVISOR (Name or Initials): JBR

QUALITY ASSURANCE SUPERVISOR (Name or Initials): Merrie Silverstone

CHARGE: $120.00

REMARKS:

SEND COPY TO:
AGI WATER RESOURCES
P.O. BOX 1158
GIG HARBOR, WA 98335

WATER MANAGEMENT LABORATORIES INC.

1515 80th St. E.
Tacoma, WA 98404
531-3121

September 21, 1995

AGI Technologies
PO Box 1158
Gig Harbor, WA 98335
Attn: Scott Coffee

Dear Sir:

Results of analysis of one ground water engineering sample taken by yourself on 08-30-95 at 10:26 a.m. and received 08-31-95 at 9:45 a.m. are as follows:

Sample Identification: Sammamish Plateau Water and Sewer District Well 11.2

Test	Result
Antimony	< 0.002*
Arsenic	< 0.01*
Barium	< 0.1*
Beryllium	< 0.002*
Bicarbonate	75
Cadmium	< 0.002*
Calcium	18
Carbonate	0
Chloride	2
Chromium	< 0.01*
Color	< 5*
Copper	< 0.02*
Cyanide	< 0.1*
Fluoride	< 0.2*

Test	Result
Iron	< 0.03*
Lead	< 0.002*
Magnesium	6
Manganese	0.036
Mercury	< 0.0005*
Nickel	< 0.04*
Nitrate Nitrogen	< 0.2*
Nitrite Nitrogen	< 0.2*
Potassium	2.0
Selenium	< 0.005*
Silica	35
Silver	< 0.01*
Sodium	6
Specific Conductivity	147
pH	8.1
Sulfate	1
Thallium	< 0.001*
Total Dissolved Solids	105
Total Hardness	70
Turbidity	0.4
Zinc	< 0.05*
Total Coliform	Present
E. Coli	Absent

* < is less than

All results are in milligrams per liter except color which is in color units, pH which is in pH units, specific conductivity which is in micro-mho per cm and turbidity which is in nephelometric turbidity units. Bicarbonate, carbonate and total hardness are in milligrams per liter as calcium carbonate. Total Coliform results are per 100 mls.

Microbiology Lab Number: 08997646
Chemistry Lab Number: 08922385

Sample was analyzed according to Standard Methods for the Examination of Water and Wastewater, 18th Edition.

Chain of Custody record and results of Voc analysis are enclosed.

Sincerely,

Diane DuMond

Diane DuMond
Lab Coordinator

DD:jlp
enclosure

cc: Ron Little, SPWSD

c:\comm\agi8-31

WATER MANAGEMENT LABORATORIES INC.
1515 80th St. E.
Tacoma, WA 98404
531-3121

VOLATILE ORGANIC CHEMICAL REPORT

Results by Analysis by EPA Method 524.2
Measurement of Purgeable Organic Compounds in Water by Capillary Column
Gas Chromatography/Mass Spectrometry

Send Report To:
Scott Coffey
P.O. Box 1158
Gig Harbor, WA 98335

Bill: Ron Little
Sammamish Plateau Water and Sewer District
1510 228th Ave. SE
Issaquah, WA 98027

COUNTY : King
SYSTEM NAME : Sammamish Plateau Water and Sewer District; Well 11.2
SYSTEM ID NO. : New
DATE COLLECTED: 08/30/95
DATE ANALYZED : 09/05/95
SOURCE NUMBER : S01
SOURCE TYPE : Well

LABORATORY NO. : 089
DATA FILE : 08972539
ANALYST : William Adams
DATE OF REPORT : September 7, 1995
SUPERVISOR'S INITIALS : WMA

EPA CODE	NAME OF COMPOUND	MCL* ug/L	AMOUNT ug/L
	REGULATED COMPOUNDS		
2976	VINYL CHLORIDE	2	ND
2977	1,1-DICHLOROETHYLENE	7	ND
2981	1,1,1-TRICHLOROETHANE	200	ND
2982	CARBON TETRACHLORIDE	5	ND
2990	BENZENE	5	ND
2980	1,2-DICHLOROETHANE	5	ND
2984	TRICHLOROETHYLENE	5	ND
2969	p-DICHLOROBENZENE	75	ND
2979	t-1,2-DICHLOROETHYLENE	100	ND
2380	c-1,2-DICHLOROETHYLENE	70	ND
2983	1,2-DICHLOROPROPANE	5	ND
2991	TOLUENE	1000	ND
2987	TETRACHLOROETHYLENE	5	ND
2989	CHLOROBENZENE	100	ND
2992	ETHYL BENZENE	700	ND
2995	m/p-XYLENES		ND
2997	o-XYLENE (total xylene MCL) =	10000	ND
2996	STYRENE	100	ND
2968	o-DICHLOROBENZENE	600	ND
2964	METHYLENE CHLORIDE	5	ND
2985	1,1,2-TRICHLOROETHANE	5	ND
2418	1,2,4-TRIMETHYLBENZENE	70	ND
	TRIHALOMETHANES (THM total) =	100	
2941	CHLOROFORM		ND
2943	BROMODICHLOROMETHANE		ND
2944	CHLORODIBROMOMETHANE		ND
2942	BROMOFORM		ND

* MCL: Maximum Contaminant Level
NOTE: An amount of ND indicates that the true concentration is less than the method detection limit of 0.5 ug/L

EPA CODE	NAME OF COMPOUND	AMOUNT ug/L
	UNREGULATED COMPOUNDS	
2210	CHLOROMETHANE	ND
2214	BROMOMETHANE	ND
2216	CHLOROETHANE	ND
2978	1,1-DICHLOROETHANE	ND
2416	2,2,-DICHLOROPROPANE	ND
2410	1,1-DICHLOROPROPANE	ND
2408	DIBROMOMETHANE	ND
2412	1,3-DICHLOROPROPANE	ND
2986	1,1,1,2-TETRACHLOROETHAN	ND
2993	BROMOBENZENE	ND
2414	1,2,3-TRICHLOROPROPANE	ND
2988	1,1,2,2-TETRACHLOROETHAN	ND
2965	o-CHLOROTOLUENE	ND
2966	p-CHLOROTOLUENE	ND
2967	m-DICHLOROBENZENE	ND
2212	DICHLORODIFLUOROMETHANE	ND
2218	TRICHLOROFLUOROMETHANE	ND
2430	BROMOCHLOROMETHANE	ND
2994	ISOPROPYLBENZENE	ND
2998	N-PROPYLBENZENE	ND
2424	1,3,5-TRIMETHYLBENZENE	ND
2426	TERT-BUTYLBENZENE	ND
2428	SEC-BUTYLBENZENE	ND
2030	p-ISOPROPYLTOLUENE	ND
2422	n-BUTYLBENZENE	ND
2378	1,2,4-TRICHLOROBENZENE	ND
2248	NAPTHALENE	ND
2246	HEXACHLOROBUTADIENE	ND
2420	1,2,3-TRICHLOROBENZENE	ND
2228	cis-1,3-DICHLOROPROPENE	ND
2224	trans-1,3-DICHLOROPROPENE	ND

NOTE:DIBROMOETHANE(EDB) AND DIBROMOCHLOROPROPANE(DBCP) WERE ALSO ANALYZED FOR AND WERE AT CONCENTRATIONS BELOW DETECTION LIMITS. THIS DOES NOT CONSTITUTE AN ADEQUATE ANALYSIS FOR THESE COMPOUNDS. **Composite results are totals

GROUND WATER CONTAMINATION
Susceptibility Assessment Survey Form

SAMMAMISH PLATEAU WATER & SEWER DISTRICT
1510 228TH Avenue S.E.
Issaquah, Washington

(206) 392-6256

WELL 12

GROUND WATER CONTAMINATION
Susceptibility Assessment Survey Form

TABLE OF CONTENTS

- Susceptibility Assessment Survey Form
- Well Site Location Map
- Construction and Testing Report

Ground Water Contamination
Susceptibility Assessment Survey Form
Version 2.2

IMPORTANT! Please complete one form for each ground water source (well, wellfield, spring) used in your water system. Photocopy as necessary.

PART I: System Information

Well owner/manager : SAMMAMISH PLATEAU WATER & SEWER DISTRICT

Water system name : SAMMAMISH PLATEAU WATER & SEWER DISTRICT

County: KING

Water system number: A09009 Source number: _____

Well depth: 100' (ft.) (*From WFI form*)

Source name: CASCADE VIEW WELL SOE / ORIGINALLY CASCADE VIEW DISTRICT - WELL #1 / WELL #12

WA well identification tag number: ___ ___ ___-___ ___ ___

X well not tagged

Number of connections: 10,050 ☆ Population served: 26 000

Township: 25 N Range: 07 E

Section: 13 1/4 1/4 Section: NW/SW

Latitude/longitude (if available): _____/_____

How was lat./long. determined?

___ global positioning device ___ survey ___ topographic map
___ other: _____

• Please refer to Assistance Packet for details and explanations of all questions in Parts II through V.

PART II: Well Construction and Source Information

1) Date well originally constructed: 3/27/61 month/day/year

last reconstruction: 6/30/94 month/day/year

_____ information unavailable

☆ PLEASE NOTE: UNTIL JUNE 1995 THIS WELL WAS [illegible] DISTRICT [illegible] LESS THAN [illegible] CUSTOMERS — MERGED [illegible] ALSO THIS WELL HAS BEEN [illegible] BEFORE [illegible]

2) Well driller: H.C. MEYER DRILLING Co

___ well driller unknown

3) Type of well:

___Drilled: ___ rotary ___ bored ___ cable (percussion) ___ Dug

___ Other: ___ spring(s) ___ lateral collector (Ranney)

___ driven ___ jetted ___ other: _____

Additional comments: _____

4) Well report available? ___ YES (attach copy to form) X NO

If no well log is available, please attach any other records documenting well construction; e.g. boring logs, "as built" sheets, engineering reports, well reconstruction logs.

5) Average pumping rate: 100 (gallons/min)

Source of information: WATER FACILITIES INVENTORY

If not documented, how was pumping rate determined? _____

___ Pumping rate unknown

6) Is this source treated? ___ YES X NO

If so, what type of treatment:

___ disinfection ___ filtration ___ carbon filter ___ air stripper ___ other

Purpose of treatment (describe materials to be removed or controlled by treatment):

7) If source is chlorinated, is a chlorine residual maintained: ___ YES X NO

Residual level: _____ *(At the point closest to the source.)*

PART III: Hydrogeologic Information

1) Depth to top of open interval: [check one]

X (less than) 20 ft ___ 20-50 ft ___ 50-100 ft ___ 100-200 ft ___ (greater than) 200 ft

___ information unavailable

2) Depth to ground water (static water level):

___ (less than) 20 ft ___ 20-50 ft ___ 50-100 ft X (greater than) 100 ft

___ flowing well/spring (artesian)

How was water level determined?

___ well log ___ other: Adapted in 1982 from 1901 H2O Meter Well Log

___ depth to ground water unknown

3) If source is a flowing well or spring, what is the confining pressure:

N/A psi (pounds per square inch)

or

N/A feet above wellhead

4) If source is a flowing well or spring, is there a surface impoundment, reservoir, or catchment associated with this source: ___ YES ___ NO N/A

5) Wellhead elevation (height above mean sea level): _____ (ft)

How was elevation determined? ___ topographic map ___ Drilling/Well Log ___ altimeter

___ other: _____

X information unavailable

6) Confining layers: (This can be completed only for those sources with a drilling log, well log or geologic report describing subsurface conditions. Please refer to assistance package for example.)

___ evidence of a confining layer in well log

___ no evidence of a confining layer in well log

If there is evidence of a confining layer, is the depth to ground water more than 20 feet above the bottom of the lowest confining layer? ___ YES ___ NO

X information unavailable

7) Sanitary setback:

X (less than) 100 ft* ___ 100–120 ft ___ 120–200 ft ___ (greater than) 200 ft
* if less than 100 ft describe the site conditions:

WELL IS LOCATED AT ORIGINAL OFFICE SITE WITH RESTROOM FACILITIES AVAILABLE - OFFICE IS NOW USED SPORADICALLY FOR PICK UP OF TOOLS & MAINTENANCE PURPOSES

8) Wellhead construction:

X wellhead enclosed in a wellhouse

X controlled access (describe): locked

___ other uses for wellhouse (describe): ___

___ no wellhead control

9) Surface seal:

___ 18 ft

___ (less than) 18 ft (no Department of Ecology approval)

___ (less than) 18 ft (Approved by Ecology, include documentation)

___ (greater than) 18 ft

X depth of seal unknown

___ no surface seal

10) Annual rainfall (inches per year):

___ (less than) 10 in/yr ___ 10–25 in/yr X (greater than) 25 in/yr

PART IV: Mapping Your Ground Water Resource

1) Annual volume of water pumped: [illegible] (gallons)

How was this determined?

___ meter

X estimated: ___ pumping rate (100 GPM)

___ pump capacity (_____)

___ other: _____

2) "Calculated Fixed Radius" estimate of ground water movement:
(see Instruction Packet)

6 month ground water travel time : 700 (ft)

1 year ground water travel time : 980 (ft)

5 year ground water travel time: 2200 (ft)

10 year ground water travel time: 3110 (ft)

THESE ARE THE CFR'S FOR THIS PACKAGE.

Information available on length of screened/open interval?

___ YES X NO

Length of screened/open interval: _____ (ft)

3) Is there a river, lake, pond, stream, or other obvious surface water body within the 6 month time of travel boundary? ___ YES ___ NO (mark and identify on map).

4) Is there a stormwater and/or wastewater facility, treatment lagoon, or holding pond located within the 6 month time of travel boundary? ___ YES X NO (mark and identify on map).

Comments: _____

PART V: Assessment of Water Quality

1) Regional sources of risk to ground water:

Please indicate if any of the following are present within a circular area around your water source having a radius up to and including the five year ground water travel time:

	6 month	1 year	5 year	unknown
likely pesticide application				X
stormwater injection wells	No	No	No	
other injection wells	No	No	No	
abandoned ground water well				X
landfills, dumps, disposal areas	No	No	No	
known hazardous materials clean-up site	No	No	No	
water system(s) with known quality problems				X
population density (greater than) 1 house/acre	AREA IS ZONED RURAL			
residences commonly have septic tanks	YES	YES	YES	
Wastewater treatment lagoons	No	No	No	
sites used for land application of waste	No	No	No	

Mark and identify on map any of the risks listed above which are located within the 6 month time of travel boundary? *(Please include a map of the wellhead and time of travel areas with this form. Please locate and mark any of the following.)*

If other recorded or potential sources of ground water contamination exist within the ten year time of travel circular zone around your water supply, please describe:

AREA IS ZONED RESIDENTIAL/RURAL -
EXCEPT FOR FIRE STATION LOCATED
ACCESS STREET FROM WELL.

2) Source specific water quality records:

Please indicate the occurrence of any test results since 1986 that meet the following conditions: (Unless listed on assessment, MCLs are listed in assistance package.)

A. Nitrate: (Nitrate MCL = 10 mg/l)	YES
Results greater than MCL	___
(less than) 2 mg/liter nitrate	X
2-5 mg/liter nitrate	___
(greater than) 5 mg/liter nitrate	___
Nitrate sampling records unavailable	___

B. VOCs: (VOC detection level 0.5 ug/l or 0.0005 mg/l.)	YES
Results greater than MCL or SAL	___
VOCs detected at least once	___
VOC test performed but never detected	___
VOC sampling records unavailable	___
INFORMATION UNAVAILABLE	

C. EDB/DBCP: (EDB MCL = 0.05 ug/l or 0.00005 mg/l. DBCP MCL = 0.2 ug/l or 0.0002 mg/l.)	YES
EDB/DBCP detected below MCL at least once	___
EDB/DBCP detected above MCL at least once	___
EDB/DBCP never detected	___
EDB/DBCP tests required but not yet completed	___
EDB/DBCP tests not required	___
INFORMATION UNAVAILABLE	

D. Other SOCs (pesticides and other synthetic organic chemicals):	YES
Other SOCs detected	___
Other SOC tests performed but none detected *	___
Other SOC tests not performed	___
INFORMATION UNAVAILABLE	

*If any SOCs in addition to EDB/DBCP were detected, please identify and date. If other SOC tests were performed, but no SOCs detected, list test methods here: _____

_____

_____

_____

* PLEASE NOTE: IN GOING THROUGH THE CASCADE VIEW FILES, WE WERE ONLY ABLE TO LOCATE A 1988 TEST, AT THIS TIME. (THE TEST RESULTS ARE ENCLOSED).

E. Bacterial contamination: YES

Any bacterial detection(s) in the past 3 years in samples taken from the source (not distribution sampling records). ___

Has source (in past 3 years) had a bacteriological contamination problem found in distribution samples that was attributed to the source. ___

Source sampling records for bacteria unavailable X

Part VI: Geographic or Hydrologic Factors Contributing to a Non-Circular Zone of Contribution

The following questions will help identify those ground water systems which may not be accurately represented by the calculated fixed radius (CFR) method described in Part IV. For these sources, the CFR areas should be used as a preliminary delineation of the critical time of travel zones for that source. As a system develops its Wellhead Protection Plan for theses sources, a more detailed delineation method should be considered.

1)Is there evidence of obvious hydrologic boundaries within the 10 year time of travel zone of the CFR? (Does the largest circle extend over a stream, river, lake, up a steep hillside, and/or over a mountain or ridge?)

X YES ___ NO (STREAMS)

Describe with references to map produced in Part IV:

___

___

2) Aquifer Material:

A) Does the drilling log, well log or other geologic/engineering reports identify that the well is located in an area where the underground conditions are identified as fractured rock and/or basalt terrain?

___ YES ___ NO Unknown

B) Does the drilling log, well log or other geologic/engineering reports indicate that the well is located in an area where the underground conditions are primarily identified as coarse sand and gravel?

X YES ___ NO EVALUATION & REHABILITATION REPORT, 12/1/94

3) Is the source located in an aquifer with a high horizontal flow rate? (These can include sources located on flood plains of large rivers, artesian wells with high water pressure, and/or shallow flowing wells and springs.)

___ YES ___ NO

4) Are there other high capacity wells (agricultural, municipal and/or industrial) located within the CFRs?

a) Presence of ground water extraction wells removing more than approximately 500 gal/min within...

	YES	NO	unknown
6 month travel time	___	___	___
6 month–1 year travel time	___	___	___
1–5 year travel time	___	___	___
5–10 year travel time	___	___	___

b) Presence of ground water recharge wells (dry wells) or heavy irrigation within...

	YES	NO	unknown
1 year travel time	___	___	___
1–5 year travel time	___	___	___
5–10 year travel time	___	___	___

Please identify or describe additional hydrologic or geographic conditions that you believe may affect the shape of the zone of contribution for this source. Where possible, reference them to locations on the map produced in Part IV.

_____

_____

_____

_____

_____

_____

_____

_____

Suggestions and Comments

Did you attend one of the susceptibility workshops? ___ YES ___ NO

Did you find it useful? ___ YES ___ NO

Did you seek outside assistance to complete the assessment? ___ YES ___ NO

- -

This form and instruction packet are still in the process of development. Your comments, suggestions and questions will help us upgrade and improve this assessment form. If you found particular sections confusing or problematic please let us know. How could this susceptibility assessment be improved or made clearer? Did the instruction package help you find the information needed to complete the assessment? How much time did it take you to complete the form? Were you able to complete the assessment without additional/outside expertise? Do you feel the assessment was valuable as a learning experience? Any other comments or constructive criticisms you have would be appreciated.

____

____

____

____

____

____

____

____

____

CASCADE VIEW WATER DISTRICT

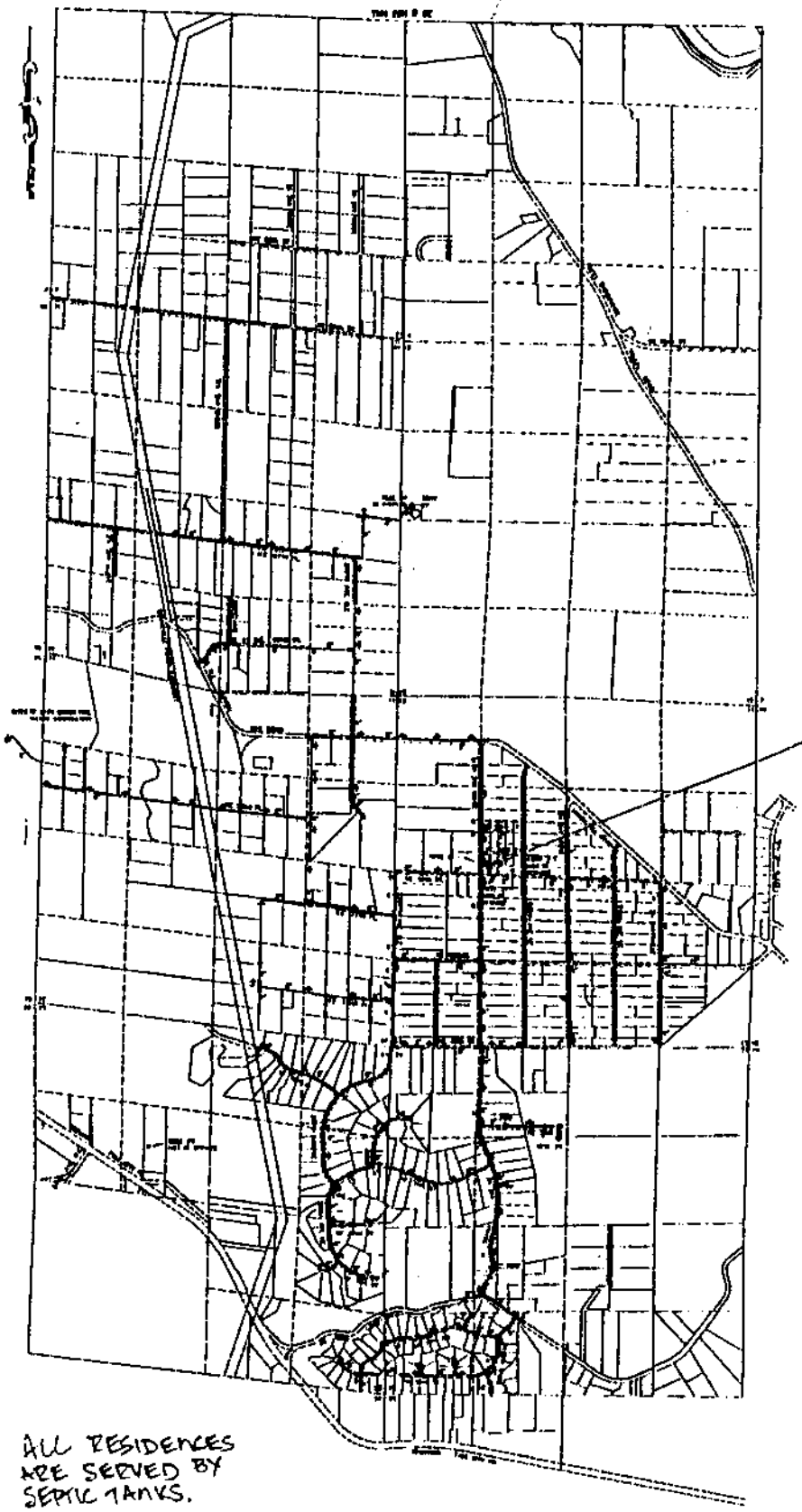

ALL RESIDENCES
ARE SERVED BY
SEPTIC TANKS.

EVALUATION AND REHABILITATION OF CASCADE VIEW WELL 1

INTRODUCTION

Cascade View Water District Well 1 was drilled and completed in 1961. The well penetrates a very permeable sand and gravel aquifer, but its yield is limited by the relatively low water level. Since 1982, the well has been operated with the aid of a vacuum pump to increase production.

Recently, the District has been forced to reduce the pumping rate from Well 1 to prevent air entrainment in the discharged water. Since the well's flow meter has not worked for some time, its actual pumping rates are unknown. This report describes AGI's evaluation of the current condition of the well and provides recommendations for continued operation.

FINDINGS

Static Water Level Decline

Static water levels measured in Well 1 have shown a decline of approximately 10 feet since 1961. The water levels shown on **Figure 1** were measured at approximately the same time of year and therefore suggest long-term water level decline rather than seasonal fluctuations. In similar local aquifers, high water levels generally occur in the spring when winter precipitation reaches the aquifer. **Table 1** shows a seasonal rise in water levsl of 1.67 feet between the time the pump was removed in mid-April until testing was completed at the end of June.

Table 1

Measured Water Levels	
Date	**Depth to Water**
3/27/61	120.00 ft
4/30/82	122.82 ft
4/18/94	130.35 ft
5/12/94	129.57 ft
6/30/94	128.68 ft

More extensive water level records are needed to chart the actual seasonal change of water levels in this aquifer. **Figure 1** shows an increased rate of water level decline between 1982 and 1994. This decline may be caused by any or all of the following factors:

- Lower than normal precipitation, resulting in reduced recharge to the aquifer
- Increased pumping from the aquifer
- Decreased recharge area from local development

If the indicated rate of decline is constant, the static water level could reach the pump intake of 134.5 feet in about six years. Use of the well may have to be curtailed before then.

A current yield of about 200 gpm is dependent on the vacuum system, used to maintain a higher than natural pumping level in the well. Without the vacuum, the long-term pumping yield would be less than 100 gpm.

Well Performance

Since the well was drilled, AGI Technologies (Carr/Associates Inc.) has conducted two pumping tests of Well 1 for Cascade View (King County Water District 122). As shown on **Figure 2**, the 8-inch well was completed in 1961 by H.O. Meyer Drilling Company with 10 feet of 0.040-inch slot Cook well screen, set between depths of 135 and 145 feet. **Table 2** compares the results of the original 1961 test to the more recent tests.

Table 2

Well Test Data Comparison			
Date	**Pumping Rate (gpm)**	**Drawdown (ft)**	**Specific Capacity (gpm/ft)**
3/27/61	258	5	51.6
4/30/82	104.5	1.11	94
6/30/94	103.5	1.31	79

The original 1961 test showed a lower specific capacity than later tests, because it was conducted at a much higher pumping rate.

- Resealed the wellhead for vacuum pump operation.
- Installed a new well seal that allows access for periodic water level measurements without vacuum and maintains an airtight seal for the vacuum pump.

OTHER RECOMMENDATIONS

For the District to receive the maximum benefit from Well 1, we recommend:

- Measuring static water levels monthly and recording the results
- Conserving the good quality water found in this aquifer by pumping only the amount required for blending with other District water of lessor quality
- Recording the quantities pumped
- Pumping Well 1 only with the vacuum pump in operation
- Exploring for this shallow aquifer in other parts of the service area
- Reevaluating the monthly water level data within two years

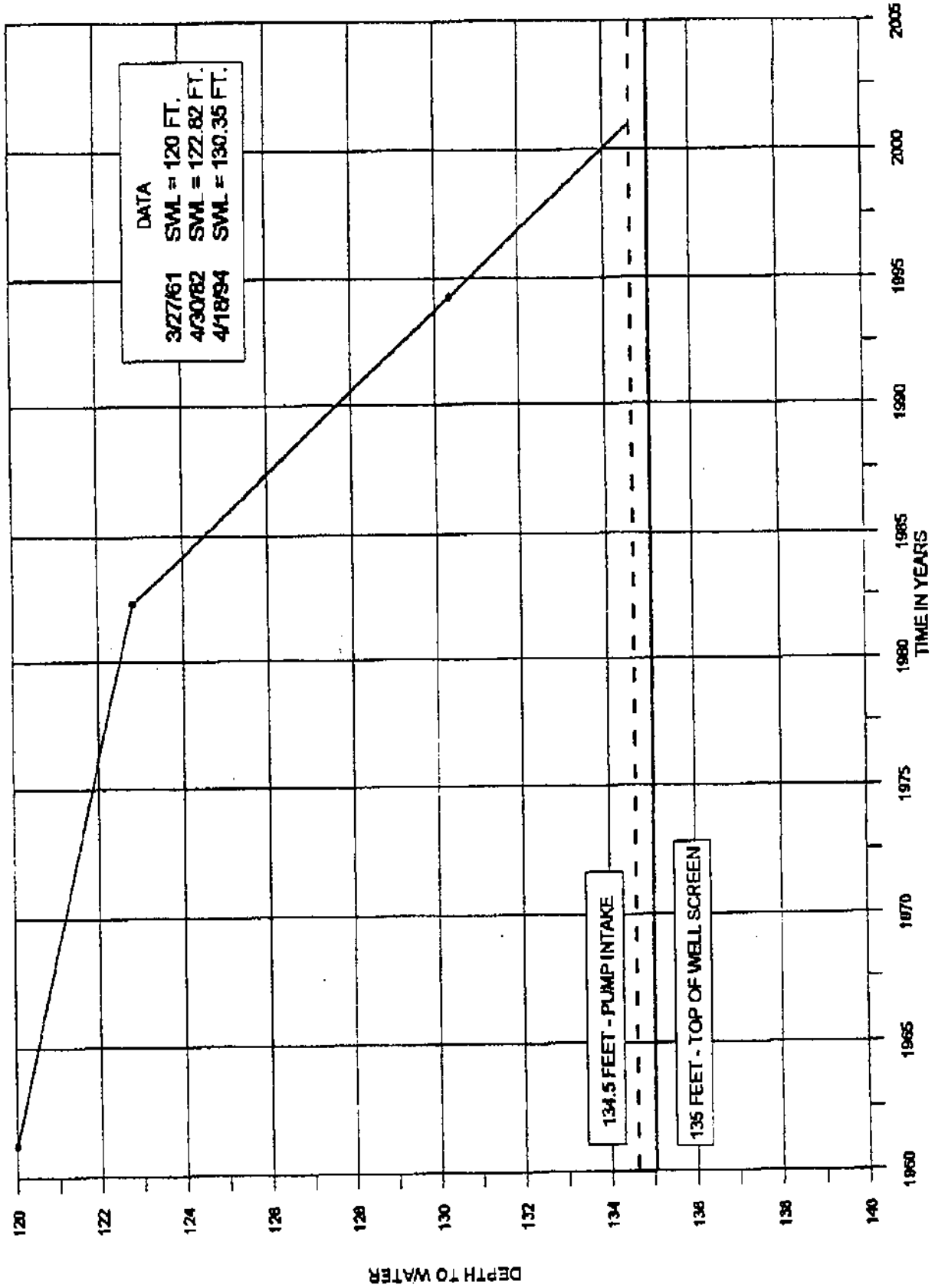

AGI TECHNOLOGIES

CASCADE VIEW - WELL 1

STATIC WATER LEVEL DECLINE

FIGURE 1

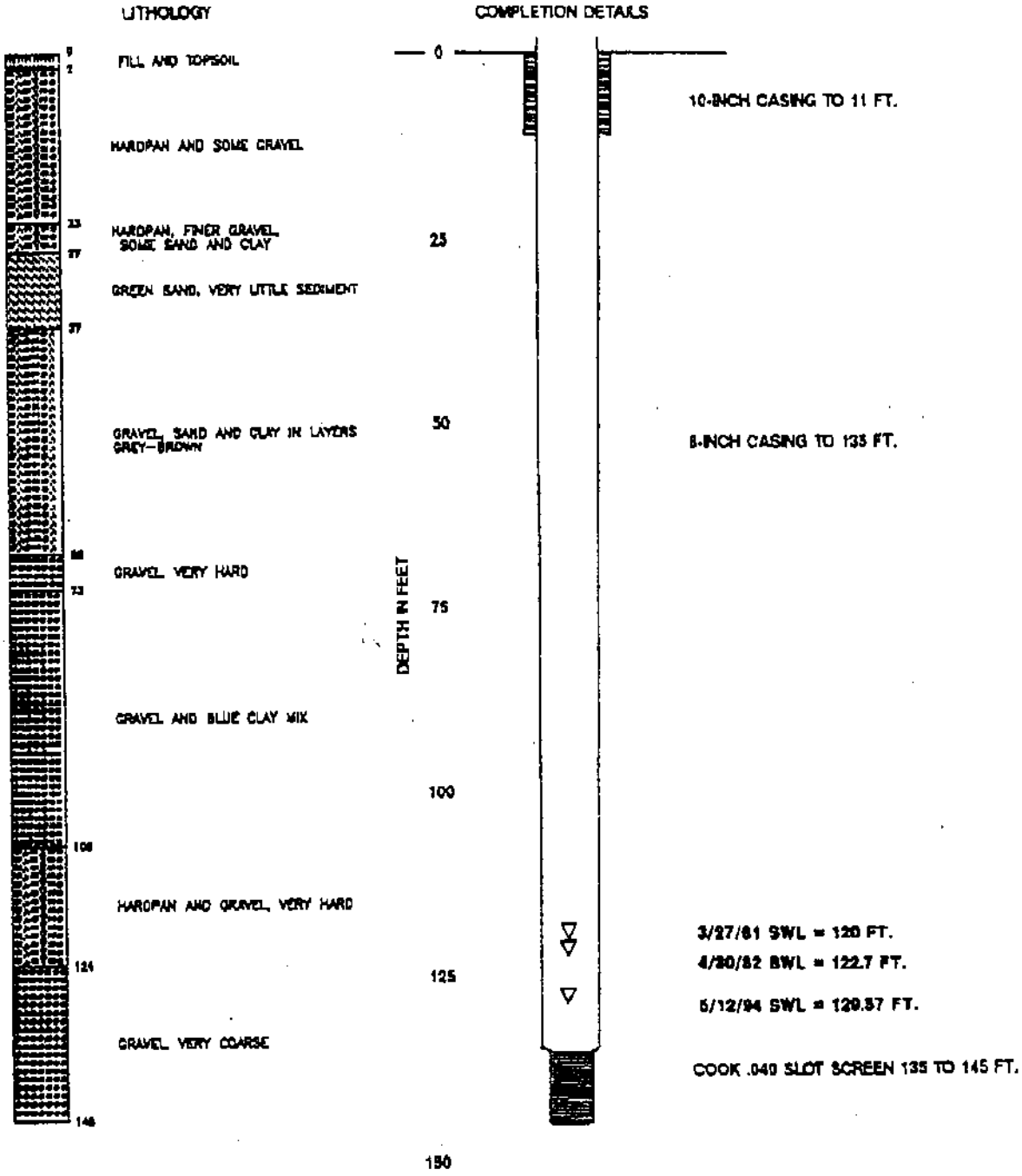

ADAPTED FROM H2O MEYER WELL LOG

T25N R8E 13F

AGI TECHNOLOGIES

CASCADE VIEW - WELL 1

LITHOLOGIC LOG AND COMPLETION DETAILS

FIGURE 2

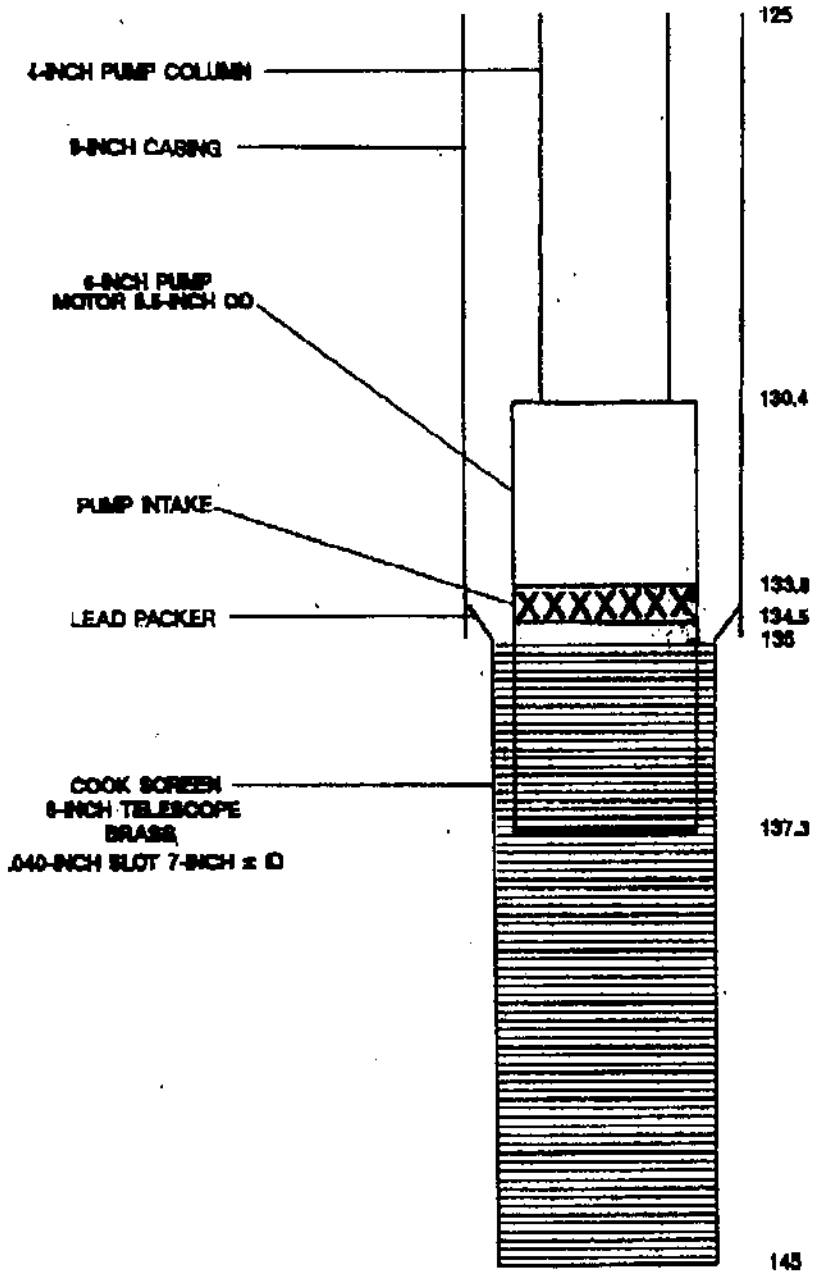

AGI TECHNOLOGIES

CASCADE VIEW - WELL 1

PUMP INSTALLATION

FIGURE 3

Well #1

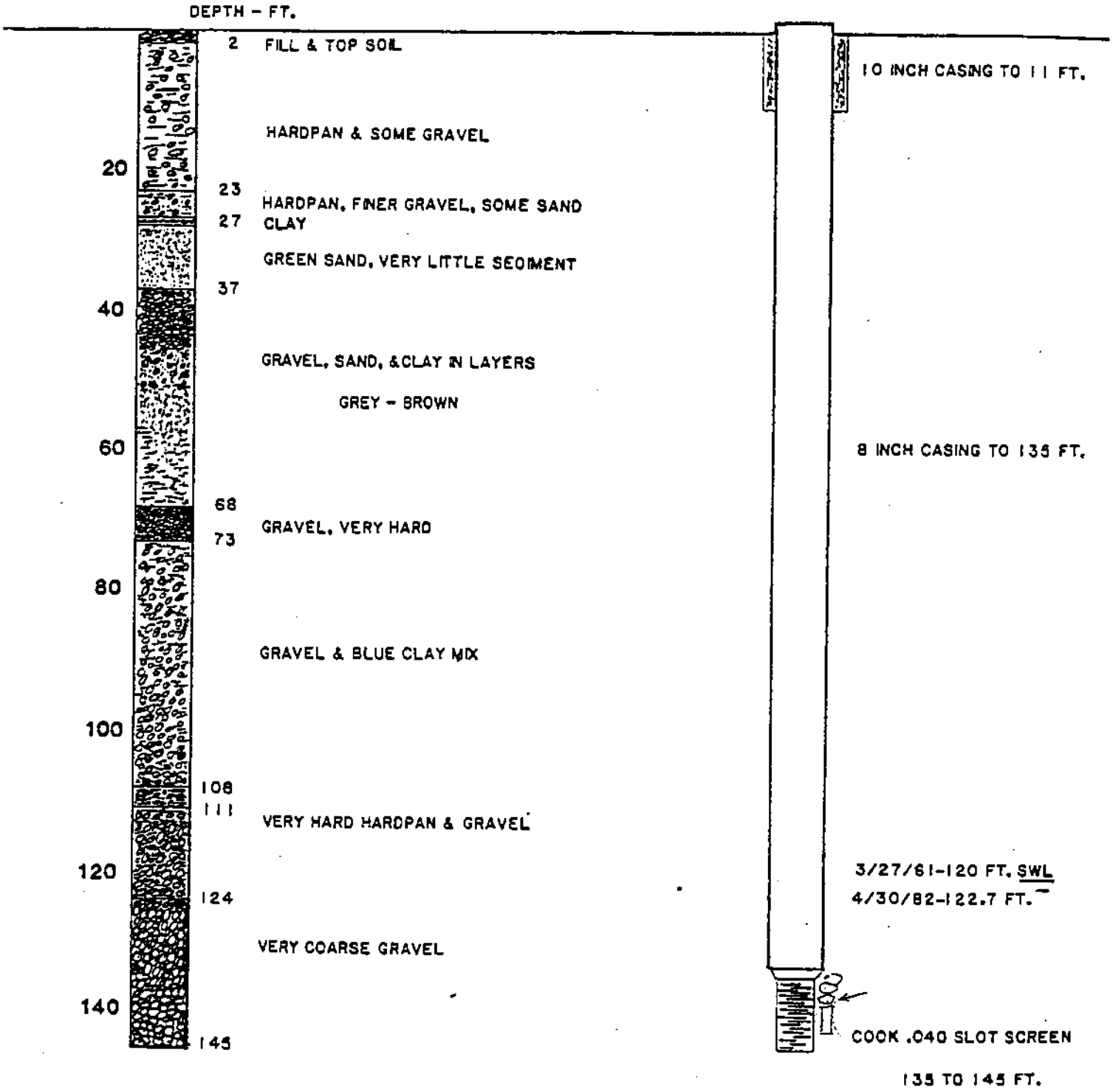

J.R. CARR / ASSOCIATES APRIL 1982 PROJ. # 254 - 2	K. C. W. D. 122 WELL 1	ADAPTED FROM, H2O MEYER WELL LOG 1961 T25N R6E 13F

WATER FACILITIES INVENTORY (WFI)

AUG 2 1 1995

Environmental Health

Read instructions on back before completing

STATE NUMBER	2. COUNTY	GROUP	TYPE	WRIA
[illegible]	[illegible]	A	[illegible]	[illegible]

3. SYSTEM NAME: SAMMAMISH PLATEAU WATER & SEWER

STREET ADDRESS: 1510 228TH AVE SE.

P.O. BOX (IF APPLICABLE):

CITY: ISSAQUAH | STATE: WA | ZIP CODE: 98027

4. OWNER'S NAME (LAST, FIRST): SAMMAMISH PLATEAU WATER & | OWNER NO: 3007

STREET ADDRESS: 1510 228TH AVE. S.E.

P.O. BOX (IF APPLICABLE):

CITY: ISSAQUAH | STATE: WA | ZIP CODE: 98027

5. SYSTEM CONTACT PERSON: RONALD E. LITTLE - MANAGER | TITLE:

DAY TELEPHONE: 206-392-5256 | EVENING TELEPHONE:

6. OWNERSHIP (CHECK ONE ONLY)

- [ ] PRIVATE: NON-PROFIT
- [ ] PRIVATE: FOR-PROFIT
- [X] LOCAL GOVERNMENT (COUNTY / CITY / PUD / WATER DISTRICT)
- [ ] STATE
- [ ] FEDERAL

7. PREDOMINANT CHARACTERISTIC (CHECK ONE ONLY)

- [X] RESIDENTIAL
- [ ] RECREATIONAL
- [ ] BUSINESS / INDUSTRIAL / AGRICULTURAL / COMMERCIAL
- [ ] LODGING / FOOD SERVICE
- [ ] SCHOOL / DAY CARE
- [ ] OTHER (CHURCHES, ETC.)

WFI COMPLETED BY: | TITLE:

DAY TELEPHONE: | DATE:

8. SUBMITTED FOR: [ ] NEW SYSTEM [ ] NO CHANGE [ ] REACTIVATE [ ] SYSTEM NAME CHANGE* [ ] UPDATE [ ] DELETE

*OLD SYSTEM NAME - ENTER ONLY IF CHANGING WITH THIS WFI

SYSTEMS SERVING ANY RESIDENTS (PEOPLE LIVING IN A DWELLING SERVED BY THE SYSTEM), COMPLETE THIS SECTION

9. NUMBER ACTIVE RESIDENTIAL CONNECTIONS: 9641

10. NUMBER ACTIVE RESIDENTIAL POPULATION: 27,898

SYSTEMS SERVING ANY NON-RESIDENTS (I.E., TRAVELERS, EMPLOYEES, STUDENTS, ETC.), COMPLETE THIS SECTION

11. NUMBER NON-RESIDENTIAL CONNECTIONS:

12. ENTER AVERAGE DAILY NON-RESIDENTIAL POPULATION SERVED FOR EACH MONTH. MAKE ENTRY FOR EACH MONTH

JAN.	APR.	JULY	OCT.
FEB.	MAY	AUG.	NOV.
MAR.	JUNE	SEP.	DEC.

13. DOES THE SYSTEM SERVE AT LEAST 25 OF THE SAME NON-RESIDENTS FOR 4 OR MORE DAYS PER WEEK FOR AT LEAST 180 DAYS PER YEAR?

[ ] YES [X] NO

14. TOTAL NUMBER CONNECTIONS METERED: 9,641

15. DISTRIBUTION RESERVOIR(S) TOTAL CAPACITY: 12,850,000 GALLONS

16. DOH SOURCE NUMBER	17. SOURCE NAME (LIST UTILITY'S NAME FOR SOURCE. IF SOURCE IS PURCHASED OR INTERTIED, LIST SELLER'S ID# AND NAME USING FOLLOWING FORMAT: XXXXXX / NAME EXAMPLE: 77050Y / SEATTLE)	18. SOURCE CATEGORY: WELL	WELL FIELD	SURFACE	SPRING	RAINWATER / INF. GAL.	INTERTIE	PURCHASE-TREATED	PURCHASE-UNTREATED	19. USE: PERMANENT	SEASONAL	EMERGENCY	20. SOURCE METERED	21. TREATMENT: NONE	CHLORINATION	FILTRATION	FLUORIDATION	OTHER	22. WELL DEPTH (FEET)	23. SOURCE CAPACITY (GPM)	24. SOURCE LOCATION: 1/4, 1/4 SEC.	SEC. NO.	TWP	RNG.	SWTR EVALUATION / VOC EVALUATION
S01	WELL 1	X							X			Y	X					154	500	SW/NE	10	24N	06E			
S02	WELL 2	X								X		Y	X					132	360	NW/SE	11	24N	06E			
S03	WELL # 5	X							X			Y		X				716	450	NW/SW	34	25N	06E			
S04	WELL # 4	X							X			Y		X				714	625	SW/NW	34	25N	06E			
S05	WELL 6	X								X		Y		X				366	600	NE/SE	32	25N	06E			
S06	WELL #7	X								X		Y					X	150	2,000	SE/SE	21	24N	06E			
S07	WELL #8	X							X			Y					X	150	3,500	SE/SE	21	24N	06E			
S08	CASCADE VIEW WELL	X							X			Y	X					100	100	NW/SW	13	25N	07E			
S09	CASCADE VIEW WELL	X							X			Y			X			955	200	SW/NW	12	25N	06E			

MINIMUM REQUIRED BACTERIOLOGICAL SAMPLING SCHEDULE

25	26. JAN	FEB	MAR	APR	MAY	JUN	JUL	AUG	SEP	OCT	NOV	DEC
	30	30	30	30	30	30	30	30	30	30	30	30

DIC APPROVED SERVICES (PER PLANS): 0 | DATE OF LAST SANITARY SURVEY: 00 00 0000 | BY DOH | LHD

SYSTEM IN CRITICAL WATER SUPPLY SERVICE AREA? X YES NO | GW MGMT AREA? YES NO | FOR LHD USE ONLY

EFFECTIVE DATE RETRO. CHANGES | SIGNATURE OF DOH REVIEWER | DATE

WATER SYSTEM

DOH 331-411 Rev. 2/95

Health
Environmental Health

WATER FACILITIES INVENTORY (WFI)

Read instructions on back before completing

DATE UPDATED: 08/08/[illegible]

SYSTEM ID NO.	2. COUNTY	GROUP	TYPE	WRIA
409009	KING	A	COMM	9

3. SYSTEM NAME: SAMMAMISH PLATEAU WATER & SEWER

STREET ADDRESS

P.O. BOX (IF APPLICABLE)

CITY | STATE | ZIP CODE

4. OWNER'S NAME (LAST, FIRST) | OWNER NO.

STREET ADDRESS

P.O. BOX (IF APPLICABLE)

CITY | STATE | ZIP CODE

5. SYSTEM CONTACT PERSON | TITLE

DAY TELEPHONE | EVENING TELEPHONE

WFI COMPLETED BY | TITLE

DAY TELEPHONE | DATE

8. SUBMITTED FOR: ☐ NEW SYSTEM ☐ SYSTEM NAME CHANGE* ☐ NO CHANGE ☐ UPDATE ☐ REACTIVATE ☐ DELETE

*OLD SYSTEM NAME - ENTER ONLY IF CHANGING WITH THIS WFI

SYSTEMS SERVING ANY RESIDENTS (PEOPLE LIVING IN A DWELLING SERVED BY THE SYSTEM), COMPLETE THIS SECTION

9. NUMBER ACTIVE RESIDENTIAL **CONNECTIONS**

10. NUMBER ACTIVE RESIDENTIAL **POPULATION**

SYSTEMS SERVING ANY NON-RESIDENTS (I.E., TRAVELERS, EMPLOYEES, STUDENTS, ETC.), COMPLETE THIS SECTION

11. NUMBER NON-RESIDENTIAL CONNECTIONS

12. ENTER **AVERAGE DAILY** NON-RESIDENTIAL POPULATION SERVED FOR EACH MONTH, MAKE ENTRY FOR EACH MONTH

JAN.	APR.	JULY	OCT.
FEB.	MAY	AUG.	NOV.
MAR.	JUNE	SEP.	DEC.

13. DOES THE SYSTEM SERVE AT LEAST 25 OF THE SAME NON-RESIDENTS FOR 4 OR MORE DAYS PER WEEK FOR AT LEAST 180 DAYS PER YEAR?

☐ YES ☐ NO

14. TOTAL NUMBER CONNECTIONS METERED

15. DISTRIBUTION RESERVOIR(S) TOTAL CAPACITY

GALLONS

6. OWNERSHIP (CHECK ONE ONLY)

- ☐ PRIVATE: NON-PROFIT
- ☐ PRIVATE: FOR-PROFIT
- ☐ LOCAL GOVERNMENT (COUNTY / CITY / PUD / WATER DISTRICT)
- ☐ STATE
- ☐ FEDERAL

7. PREDOMINANT CHARACTERISTIC (CHECK ONE ONLY)

- ☐ RESIDENTIAL
- ☐ RECREATIONAL
- ☐ BUSINESS / INDUSTRIAL / AGRICULTURAL / COMMERCIAL
- ☐ LODGING / FOOD SERVICE
- ☐ SCHOOL / DAY CARE
- ☐ OTHER (CHURCHES, ETC.)

16. DOH SOURCE NUMBER	17. SOURCE NAME (LIST UTILITY'S NAME FOR SOURCE. IF SOURCE IS PURCHASED OR INTERTIED, LIST SELLER'S ID# AND NAME USING FOLLOWING FORMAT: XXXXXX / NAME EXAMPLE: 77050Y / SEATTLE)	18. SOURCE CATEGORY: WELL	WELL FIELD	SURFACE	SPRING	GARRETY / INF. GAL.	INTERTIE	PURCHASE-TREATED	PURCHASE-UNTREATED	19. USE: FERMANENT	SEASONAL	EMERGENCY	20. SOURCE METERED	21. TREATMENT: NONE	COLORATION	FILTRATION	FLUORIDATION	OTHER	22. WELL DEPTH (FEET)	23. SOURCE CAPACITY (GPM)	24. SOURCE LOCATION: 1/4, 1/4 SEC.	SEC. NO.	TWP	RNG.	SWTR EVALUATION VOC EVALUATION
[illegible]10	CASCADE VIEW WELL	X								X			Y	X					346	110	NE/NW	24	25N	[illegible]	

MINIMUM REQUIRED BACTERIOLOGICAL SAMPLING SCHEDULE

25.	JAN	FEB	MAR	APR	MAY	JUN	JUL	AUG	SEP	OCT	NOV	DEC

C. APPROVED SERVICES (PER PLANS) | DATE OF LAST SANITARY SURVEY | BY DOH | LHD

SYSTEM IN CRITICAL WATER SUPPLY SERVICE AREA? YES NO | GW MGMT AREA? YES NO | FOR LHD USE ONLY

EFFECTIVE DATE RETRO. CHANGES | SIGNATURE OF DOH REVIEWER | DATE

USE HEAVY PENCIL
DO NOT WRITE IN SHADED AREAS

AA Test
14603 NE 37th St
Redmond WA 98052

Department of Social and Health Services
Division of Health
PUBLIC HEALTH LABORATORIES
1610 N.E. 150th St., Seattle WA 98155

(FILE)

SEE BACK FOR INSTRUCTIONS

WATER SAMPLE INFORMATION FOR INORGANIC CHEMICAL ANALYSES

USE THIS FORM FOR THE COMPLETE CHEMICAL ANALYSIS ONLY

38294

LAB. NUMBER	DATE RECEIVED	DATE COLLECTED	COLLECTED BY:
5 16472	[illegible] 88	08.19.88	R. LILLEJORD 9- (206) 222-7003

SYSTEM I.D. NO.	SYSTEM NAME	SYSTEM CLASS (circle one)	COUNTY
419958	CASCADE VIEW WATER DISTR	1 2 3 4	KING

SOURCE TYPE: ___1. Surface X 3. Well ___2. Spring ___4. Purchase

SOURCE NO. (Well No.): 01

IF SOURCE IS LAKE OR STREAM ENTER NAME: N/A

THIS SAMPLE WAS TAKEN: ☑ Before Treatment ☐ After Treatment

IF SAMPLE WAS DRAWN FROM DISTRIBUTION SYSTEM IT WAS COLLECTED FROM SYSTEM AT: (Address) N/A

FEES ARE CHARGED FOR CHEMICAL TESTING
A fee schedule is available from this department.

PARTY TO PAY FOR FEE FOR SERVICE TESTING

Jenny Lillejord
Signature (Required) (Print Full Name & Address)

CASCADE VIEW WATER DIST.
Name

P.O. BOX 97
Street

FALL CITY WA. 98024
City Zip Code

Telephone: (206) 222-7003
Area Code

IF TAKEN AFTER TREATMENT WAS IT ___ FILTERED ___ FLUORIDATED ___ CHLORINATED ___ WATER SOFTENER: TYPE USED ___

REMARKS: (Water quality problems, address for additional copies, etc.)

SEND REPORT TO

L & R SYSTEMS, INC.
P. O. BOX 1027
FALL CITY, WA 98024

LABORATORY REPORT

(DO NOT WRITE BELOW THIS LINE)

TESTS	MCL	LESS THAN <	RESULTS	UNITS	Compliance YES	Compliance NO	CHEMIST INITIALS
Arsenic	0.05 P		0.011	mg/l	/		JR
Barium	1.0 P	<	0.25	mg/l	/		KF
Cadmium	0.01 P	<	0.002	mg/l	/		KF
Chromium	0.05 P	<	0.010	mg/l	/		KF
Iron	0.3	<	0.05	mg/l	/		KF
Lead	0.05 P	<	0.010	mg/l	/		JR
Manganese	0.05	<	0.010	mg/l	/		KF
Mercury	0.002 P	<	0.010	mg/l	/		KF
Selenium	0.01 P	<	0.005	mg/l	/		KF
Silver	0.05 P	<	0.010	mg/l	/		KF
Sodium		<	10	mg/l	/		KF
Hardness			67	mg/l AS CaCo3	/		KF
Conductivity	700		170	Micromhos/cm 25° C	/		KT
Turbidity	1.0 P		0.1	NTU	/		KT
Color	15.0	<	5.0	Color Units	/		KT
Fluoride	2.0 P		0.9	mg/l	/		EL
Nitrate	10.0 P	<	0.2	mg/l	/		EL
Chloride	250	<	10	mg/l	/		EL
Sulfate	250			mg/l			
TDS	500			mg/l			
Copper	1.0			mg/l			
Zinc	5.0			mg/l			

DATE OF FINAL REPORT: 8-31-88

LABORATORY SUPERVISOR (Name or Initials) [illegible]

CHARGE:

REMARKS: pH = 8.17

MCL is the Maximum Contaminant Level Allowed. P Primary Standard

DSHS 4-92F (Rev. 1/85) -673- DSHS Laboratory & Data Processing Copy DSHS Billing Copy Water Supplier Copy District Engineer Copy Local Health Dept. Copy

Ground Water Contamination
Susceptibility Assessment Survey Form
Version 2.2

IMPORTANT! Please complete one form for each ground water source (well, wellfield, spring) used in your water system.
Photocopy as necessary.

PART I: System Information

Well owner/manager : Sammamish Plateau Water & Sewer District

Water system name : Sammamish Plateau Water & Sewer District

County: King

Water system number: 409009 Source number: New Replacement Well (Replaces Original Well 13 source number SO9

Well depth: 949 (ft.) (*From WFI form*)

Source name: Well 13R

WA well identification tag number: AAS–174

Number of connections: 14358 Population served: 48,036

Township: 25N Range: 06E

Section: 12 1/4 1/4 Section: SW1/4 of the NW1/4

Latitude/longitude (if available): 47.667 / -121.990
How was lat./long. determined?

_____ global positioning device _____ survey _____ topographic map
_x_ other: Online King County imap - http://www.metrokc.gov/gis/mapportal/iMAP_main.htm

* Please refer to Assistance Packet for details and explanations of all questions in Parts II through V.

PART II: Well Construction and Source Information

1) Date well originally constructed: 01 / 31 / 06 month/day/year

last reconstruction: __ / __ /__ month/day/year

_____ information unavailable

2) Well driller: Stephen J Schneider – Schneider Equipment Inc.

21881 River Road NE

St. Paul, Oregon 97137

__ well driller unknown

3) Type of well:

_x_ Drilled: _x_ rotary __ bored __ cable (percussion) __ Dug

__ Other: __ spring(s) __ lateral collector (Ranney)

__ driven __ jetted __ other:

Additional comments: _____

4) Well report available? _x_ YES (attach copy to form) __ NO

If no well log is available, please attach any other records documenting well construction; e.g. boring logs, "as built" sheets, engineering reports, well reconstruction logs.

5) Average pumping rate: 750 (limited to 200 gpm by current water right) (gallons/min)

Source of information: Replacement Well 13R Construction and Testing Report (CDM, 2006)

If not documented, how was pumping rate determined? _____

__ Pumping rate unknown

6) Is this source treated?

If so, what type of treatment:

_x_ disinfection _x_ filtration __ carbon filter __ air stripper __ other

Purpose of treatment (describe materials to be removed or controlled by treatment):

Water is chlorinated and filtered to remove Manganese and Arsenic

7) If source is chlorinated, is a chlorine residual maintained: _X_ YES __ NO

Residual level: minimum 0.3 ppm free after the filters (*At the point closest to the source.*)

PART III: Hydrogeologic Information

1) Depth to top of open interval: [check one]

__ < 20 ft __ 20–50 ft __ 50–100 ft __ 100–200 ft **X** >200 ft

__ information unavailable ('<' *means less than;* '>' *means greater than*)

2) Depth to ground water (static water level):

__ < 20 ft __ 20–50 ft __ 50–100 ft **X** >100 ft

__ flowing well/spring (artesian)

How was water level determined?

__ well log **X** other: Measured to within 0.01 ft with electronic sounding device

__ depth to ground water unknown

3) If source is a flowing well or spring, what is the confining pressure:

_____ psi (pounds per square inch)
or
_____ feet above wellhead

4) If source is a flowing well or spring, is there a surface impoundment, reservoir, or catchment associated with this source: __ YES __ NO

5) Wellhead elevation (height above mean sea level): 640 (ft)

How was elevation determined? **X** topographic map __ Drilling/Well Log __ altimeter

__ other: _____

__ information unavailable

6) Confining layers: (This can be completed only for those sources with a drilling log, well log or geologic report describing subsurface conditions. Please refer to assistance package for example.)

X evidence of a confining layer in well log

__ no evidence of a confining layer in well log

If there is evidence of a confining layer, is the depth to ground water more than 20 feet above the **bottom** of the **lowest confining layer**? X YES __ NO

__ information unavailable

7) Sanitary setback:

_X_ < 100 ft* __ 100–120 ft __ 120–200 ft __ > 200 ft

* if less than 100 ft describe the site conditions:

Well site is about 90 feet from the north fence line that is 10 feet within the property boundary. The proposed 90 ft protective radius was allowed by King County Health Department due to the deep (810 ft) surface seal

8) Wellhead construction:

_X_ wellhead enclosed in a wellhouse

_X_ controlled access (describe): The well will be locked in a wellhouse that is monitored via telemetered security systems. The wellhouse will be inside a locked fence.

__ other uses for wellhouse (describe): _____

__ no wellhead control

9) Surface seal:

__ 18 ft

__ < 18 ft (no Department of Ecology approval) ('<' *means less than*)

__ < 18 ft (Approved by Ecology, include documentation)('<' *means less than*)

_X_ > 18 ft ('>' *means greater than*)

__ depth of seal unknown

__ no surface seal

10) Annual rainfall (inches per year):

__ < 10 in/yr __ 10–25 in/yr _X_ > 25 in/yr

PART IV: Mapping Your Ground Water Resource

1) Annual volume of water pumped: 73,000,000 (gallons)

How was this determined?

__ meter

__ estimated: __ pumping rate (_____)

__ pump capacity (_____)

_X_ other: Water Right

2) "Calculated Fixed Radius" estimate of ground water movement:
(see Instruction Packet)

6 month ground water travel time : 332 (ft)

1 year ground water travel time : 470 (ft)

5 year ground water travel time: 809 (ft)

10 year ground water travel time: 1,144 (ft)

Information available on length of screened/open interval?

_X_ YES__ NO

Length of screened/open interval: 95 (ft)

3) Is there a river, lake, pond, stream, or other obvious surface water body within the 6 month time of travel boundary? __YES _X_ NO (mark and identify on map).

4) Is there a stormwater and/or wastewater facility, treatment lagoon, or holding pond located within the 6 month time of travel boundary? __ YES _X_ NO (mark and identify on map).

Comments: _____

_____

_____

PART V: Assessment of Water Quality

1) Regional sources of risk to ground water:

Please indicate if any of the following are present within a circular area around your water source having a radius up to and including the five year ground water travel time:

	6 month	1 year	5 year	unknown
likely pesticide application	_____	_____	_____	__X__
stormwater injection wells	_____	_____	_____	_____
other injection wells (See Comments)	__X__	__ __	__ __	_____
abandoned ground water well	_____	_____	_____	_____
landfills, dumps, disposal areas	_____	_____	_____	_____
known hazardous materials clean-up site	_____	_____	_____	_____
water system(s) with known quality problems	_____	_____	_____	_____
population density > 1 house/acre	_____	_____	_____	_____
residences commonly have septic tanks	_____	_____	__X__	_____
Wastewater treatment lagoons	_____	_____	_____	_____
sites used for land application of waste	_____	_____	_____	_____

Mark and identify on map any of the risks listed above which are located within the 6 month time of travel boundary? (*Please include a map of the wellhead and time of travel areas with this form. Please locate and mark any of the following*.)

If other recorded or potential sources of ground water contamination exist within the ten year time of travel circular zone around your water supply, please describe:

The Wellhead Protection Program for Plateau and Cascade View wells Report prepared in June 24, 1998

for the Sammamish Plateau Water & Sewer District discussed the ground water flow for the Plateau area wells

which includes original Well 13 in Zone IV. The top of Zone IV occurs at elevations of approximately 340 to 500 feet below sea level.

The Risk assessment for Well 13 in this report was identified as low due to the depth of the aquifer and the thickness of the confining layers above the top of this aquifer (>500 ft).

The District may pursue UIC registration for original Well 13 to be used as a recharge well as

part of the Cascade View Aquifer System ASR project. Potable system groundwater is used for the injection source.

2) Source specific water quality records:

Please indicate the occurrence of any test results since 1986 that meet the following conditions: (Unless listed on assessment, MCLs are listed in assistance package.)

A. Nitrate: (Nitrate MCL = 10 mg/l)	YES	NO
Results greater than MCL	____	_X
< 2 mg/liter nitrate	_X _	
2–5 mg/liter nitrate	____	
> 5 mg/liter nitrate	____	
Nitrate sampling records unavailable	____	

B. VOCs: (VOC detection level 0.5 ug/l or 0.0005 mg/l.)	YES	NO
Results greater than MCL or SAL	____	_X
VOCs detected at least once	____	_X
VOCs never detected	__X__	
VOC sampling records unavailable	____	_X

C. EDB/DBCP:	YES	NO
(EDB MCL = 0.05 ug/l or 0.00005 mg/l. DBCP MCL = 0.2 ug/l or 0.0002 mg/l.)		
EDB/DBCP detected below MCL at least once	____	
EDB/DBCP detected above MCL at least once	____	
EDB/DBCP never detected	____	
EDB/DBCP tests required but not yet completed	____	
EDB/DBCP tests not required	_X__	

D. Other SOCs (Pesticides):	YES
Other SOCs detected (pesticides and other synthetic organic chemicals)	____
Other SOC tests performed but none detected (list test methods in comments)	____
Other SOC tests not performed	_X__

If any SOCs in addition to EDB/DBCP were detected, please identify and date. If other SOC tests were performed, but no SOCs detected, list test methods here: _____

_____

_____

_____

E. Bacterial contamination: YES NO

Any bacterial detection(s) in the past 3 years in samples taken from the source (not distribution sampling records).....____ __X_

Has source (in past 3 years) had a bacteriological contamination problem found in distribution samples that was attributed to the source.....____ __X__

Source sampling records for bacteria unavailable ____

Part VI: Geographic or Hydrologic Factors Contributing to a Non-Circular Zone of Contribution

The following questions will help identify those ground water systems which may not be accurately represented by the calculated fixed radius (CFR) method described in Part IV. For these sources, the CFR areas should be used as a preliminary delineation of the critical time of travel zones for that source. As a system develops its Wellhead Protection Plan for theses sources, a more detailed delineation method should be considered.

1) Is there evidence of obvious hydrologic boundaries within the 10 year time of travel zone of the CFR? (Does the largest circle extend over a stream, river, lake, up a steep hillside, and/or over a mountain or ridge?)

__ YES _X_ NO

Describe with references to map produced in Part IV:

_____

_____

2) Aquifer Material:

A) Does the drilling log, well log or other geologic/engineering reports identify that the well is located in an area where the underground conditions are identified as fractured rock and/or basalt terrain?

__ YES _X_ NO

B) Does the drilling log, well log or other geologic/engineering reports indicate that the well is located in an area where the underground conditions are primarily identified as coarse sand and gravel?

_X_ YES __ NO

3) Is the source located in an aquifer with a high horizontal flow rate? (These can include sources located on flood plains of large rivers, artesian wells with high water pressure, and/or shallow flowing wells and springs.)

__ YES _X_ NO

4) Are there other high capacity wells (agricultural, municipal and/or industrial) located within the CFRs? YES

a) Presence of ground water extraction wells removing more than approximately 500 gal/min within...

	YES	NO	unknown
< 6 month travel time	___	_X_	____
6 month–1 year travel time	___	_X_	____
1–5 year travel time	__	_X_	____
5–10 year travel time	___	_X_	____

b) Presence of ground water recharge wells (dry wells) or heavy irrigation within...

	YES	NO	unknown
< 1 year travel time	_X__	___	____
1–5 year travel time	___	___	____
5–10 year travel time	___	___	____

Please identify or describe additional hydrologic or geographic conditions that you believe may affect the shape of the zone of contribution for this source. Where possible, reference them to locations on the map produced in Part IV.

_____

_____

Suggestions and Comments

Did you attend one of the susceptibility workshops? __ YES _X_ NO

Did you find it useful? __ YES __ NO

Did you seek outside assistance to complete the assessment? _X_ YES __ NO

- -

This form and instruction packet are still in the process of development. Your comments, suggestions and questions will help us upgrade and improve this assessment form. If you found particular sections confusing or problematic please let us know. How could this susceptibility assessment be improved or made clearer? Did the instruction package help you find the information needed to complete the assessment? How much time did it take you to complete the form? Were you able to complete the assessment without additional/outside expertise? Do you feel the assessment was valuable as a learning experience? Any other comments or constructive criticisms you have would be appreciated.

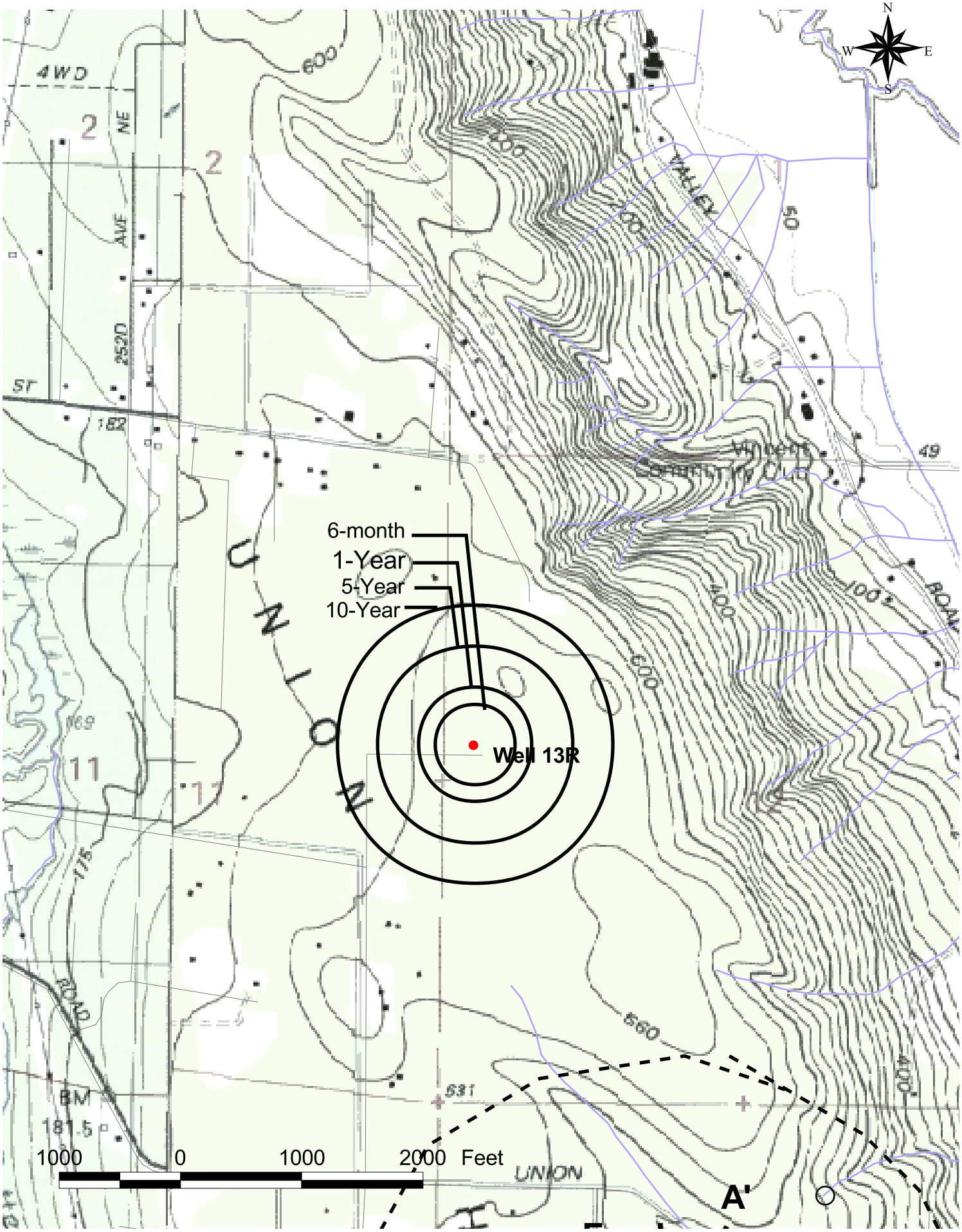

CDM

Sammamish Plateau Water and Sewer District
Well 13R Calculated Fixed Radius Map

Figure A-1

Appendix P

Wellhead Protection Area Delineation Update

This page intentionally left blank.

2007 WELLHEAD PROTECTION AREA STUDY – PLATEAU WELLS

This page intentionally left blank.

Introduction

The SPWSD 3-Dimensional numerical regional groundwater flow model was used to estimate well head protection areas (WHPA) or hydraulic capture zones for district wells, using the following methodology:

- A transient groundwater flow simulation was performed for a 10-year simulation period. Pumping assignments for the simulation are shown in Table 1. ASR operations at SPWSD wells 1R and 15 are represented in the simulation. Wells 5 and 6 were not pumping in the simulation.

- The transient groundwater flow simulation was used to develop capture zones for the plateau wells (wells 1R, 2, 2.2, 4, 4R, 10, 11.1, 11.2 and 15). To compute a capture zone, a grid of computational "particles" was released to the water table over the model area. The particles were then tracked forward in time governed by the simulated 10-year flow field. The starting locations of the particles that were extracted by SPWSD wells were recorded and mapped for each well. The areal extent of these capture zones represents the contributing recharge area to the well over a 10 year period.

- The capture zones developed using the regional SPWSD groundwater flow model were compared to older WHPA delineations that were developed using analytical methods.

Zone II Wells

Figure 1 shows the simulated 1-year, 5-year and 10-year capture zones for Zone II wells 1R, 2, 2.2, 10 and 15. These wells are located in the southern portion of the plateau and near the southern edge of the groundwater flow model. The shape and extent of the simulated captures zones differs from the earlier WHPA delineation. Some reasons for the difference include:

- The groundwater flow model incorporates vertical flow through overlying units to Zone II. The analytical WHPA delineations do not account for any vertical flow from overlying aquifers, and assume that groundwater only flows horizontally/laterally towards a pumping well.

- The groundwater flow model incorporates monthly changes in groundwater pumping and recharge, and as such represents seasonal and monthly changes in head gradients and groundwater flow directions that are not considered in analytical WHPA calculation methods. The analytical WHPA calculation assumes a uniform groundwater flow direction and gradient.

- Earlier WHPA delineations most likely did not include ASR operations at wells 1R and 15; these operations are simulated in the groundwater flow model.

- Estimated transmissivities used in the earlier delineation differ from aquifer transmissivities in the groundwater flow model; although the differences are not great.

Zone III/IV Wells

Capture zone simulations for Zone IV wells 4, 4R and 11.2 and for Zone III wells 6 and 11.1 indicate that the ten-year capture zone for none of these wells extends up to the water table. Vertical groundwater flow from shallow zones to Zone III and IV is limited by the presence of Qaf and Qbf confining layers.

Reverse particle tracking simulations for a longer period (100 years) suggest that the Zone IV wells are supplied primarily by the "ramp" at the southern edge of the plateau. The Zone III wells are supplied by downward vertical flow from shallower layers (which occurs over a longer period than 10 years), and also from the "ramp".

Figures 2 and 3 show simulated reverse particle tracks from the Zone IV wells in plan view and cross-section, respectively.

Figures 4 and 5 show simulated reverse particle tracks from the Zone III wells in plan view and cross-section, respectively.

Summary

The existing SPWSD regional groundwater flow model was used to estimate WHPAs for plateau wells. The areal extent of the WHPA represents the contributing recharge area to the well over a given period. The simulated capture zones, or WHPAs, are different from WHPA delineations developed earlier using analytical methods. Since the groundwater flow model has been calibrated to transient conditions and incorporates vertical groundwater flow and monthly pumping and groundwater recharge variations, the model-simulated WHPAs may be more representative of well contributing areas than WHPAs estimated using analytical methods. However, for conservative protection of the groundwater resources it is recommended that the larger contributing recharge areas, delineated by the analytical WHPA delineation method, be used.

Table 1. Pumping Assignments For Transient Simulation

Month	Pumping (GPM)											
	1R	**2**	**2.2**	**4**	**4R**	**10**	**11.1**	**11.2**	**12**	**13**	**14**	**15**
Jan	-500	0	0	550	0	0	0	430	6	80	0	-500
Feb	-500	0	0	400	0	0	0	480	0	80	0	-500
Mar	-500	0	0	340	0	0	0	450	0	90	0	-500
Apr	-500	0	0	610	0	0	0	550	12	100	0	-500
May	400	0	0	460	0	0	0	990	50	140	0	1600
June	400	430	350	310	0	0	0	1470	80	130	0	1600
July	400	270	580	410	140	140	200	1380	90	110	90	1600
Aug	400	300	460	480	450	450	190	780	50	110	50	1600
Sep	400	120	370	240	450	450	60	450	4	100	0	1600
Oct	0	0	50	280	420	420	0	400	5	90	0	0
Nov	-500	0	1	320	0	0	350	940	40	30	0	-500
Dec	-500	0	0	540	0	0	0	930	80	0	0	-500

Notes:

Negative pumpage indicates injection

Pumping not assigned to #5 and #6

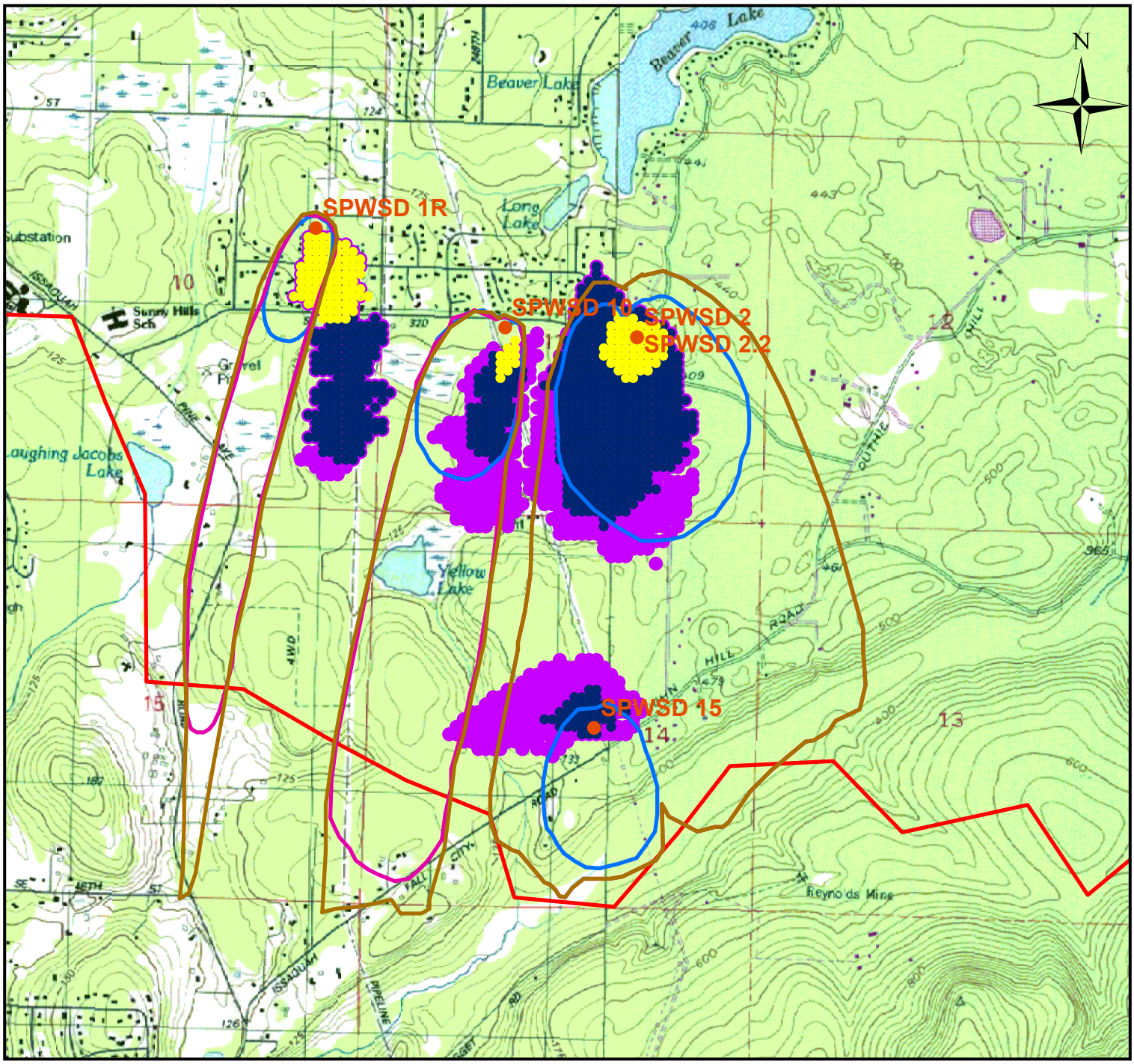

Legend

SPWSD Regional Model Simulation

- **SPWSD Wells**
- **Simulated 1-Yr Capture Zone**
- **Simulated 5-Yr Capture Zone**
- **Simulated 10-Yr Capture Zone**
- **Model Outline**

Analytical WHPA Delineation Period

- **1 Year**
- **5 Years**
- **10 Years**

Figure 1
Comparison of Analytical WHPA Estimates and Simulated Capture Zones

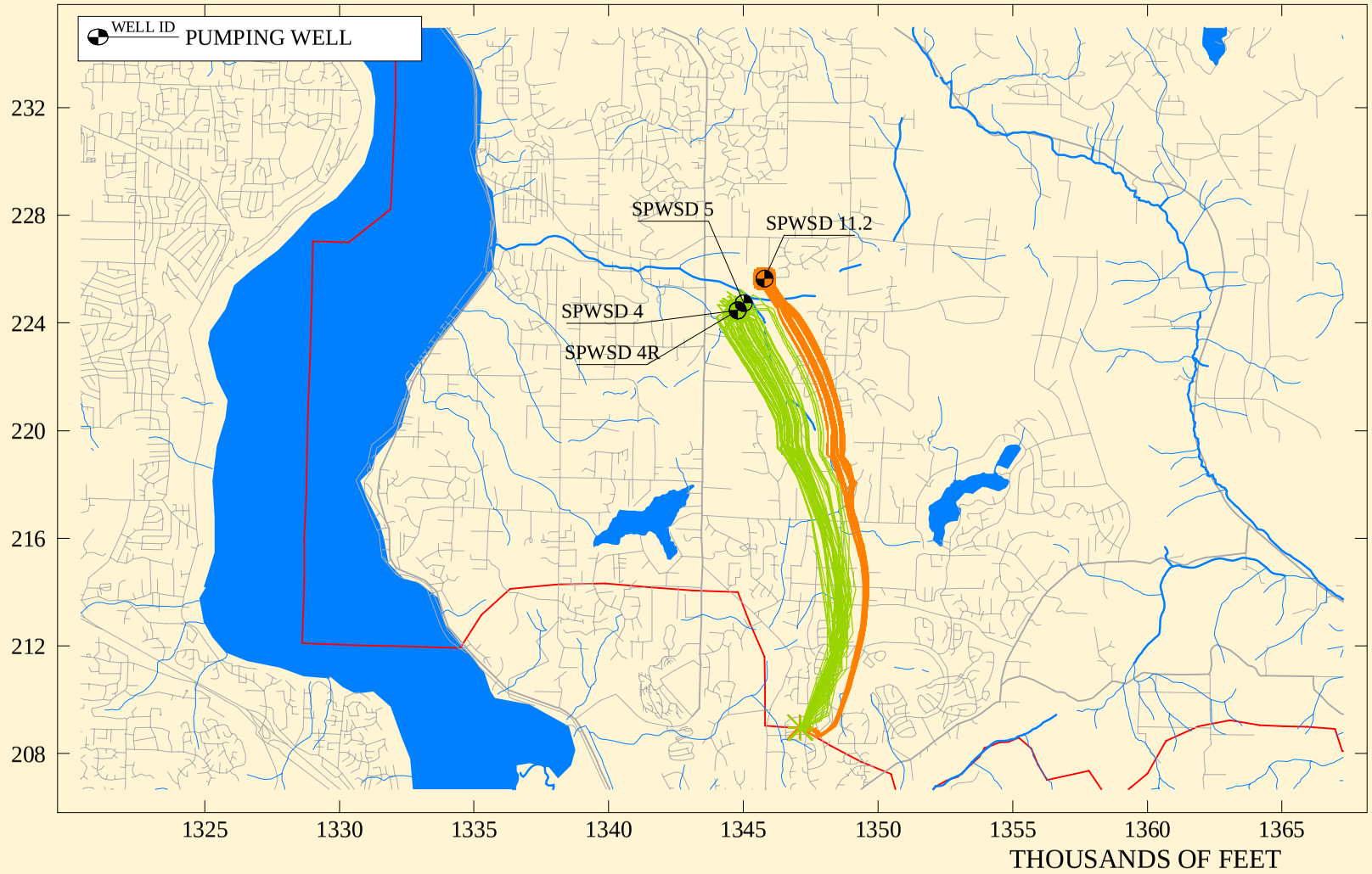

Oct19 07 model2004/sav/spwsd15_1c3_2007oct.sav

CDM

Simulated Reverse Particle Tracks From Zone IV Wells
(100 Year Travel Time)

SPWSD Groundwater Model

FIGURE
2

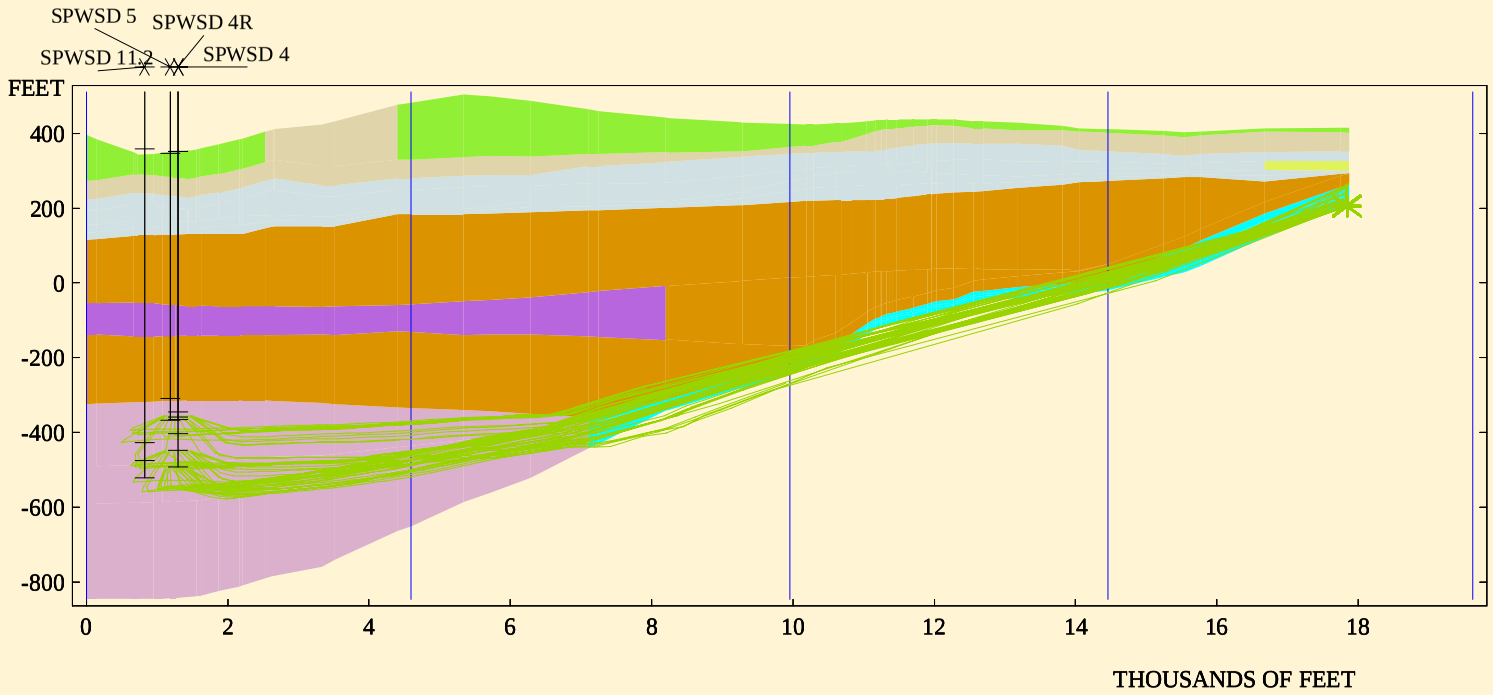

MATERIALS CROSS-SECTION DD

- Zone II Aquitard
- "Ramp"
- Zone I
- Till
- Zone II
- Zone III
- Aquitard
- Zone IV

CROSS SECTION DD

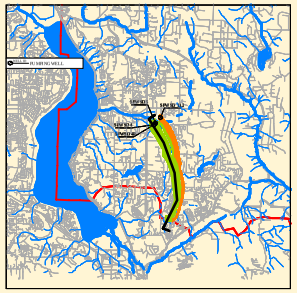

Oct19 07 model2004/sav/spwsd15_1c3_2007oct.sav

CDM

Reverse Particle Tracks From Zone IV Wells in Cross Section
(100 Year Travel Time)

SPWSD Groundwater Model

FIGURE
3

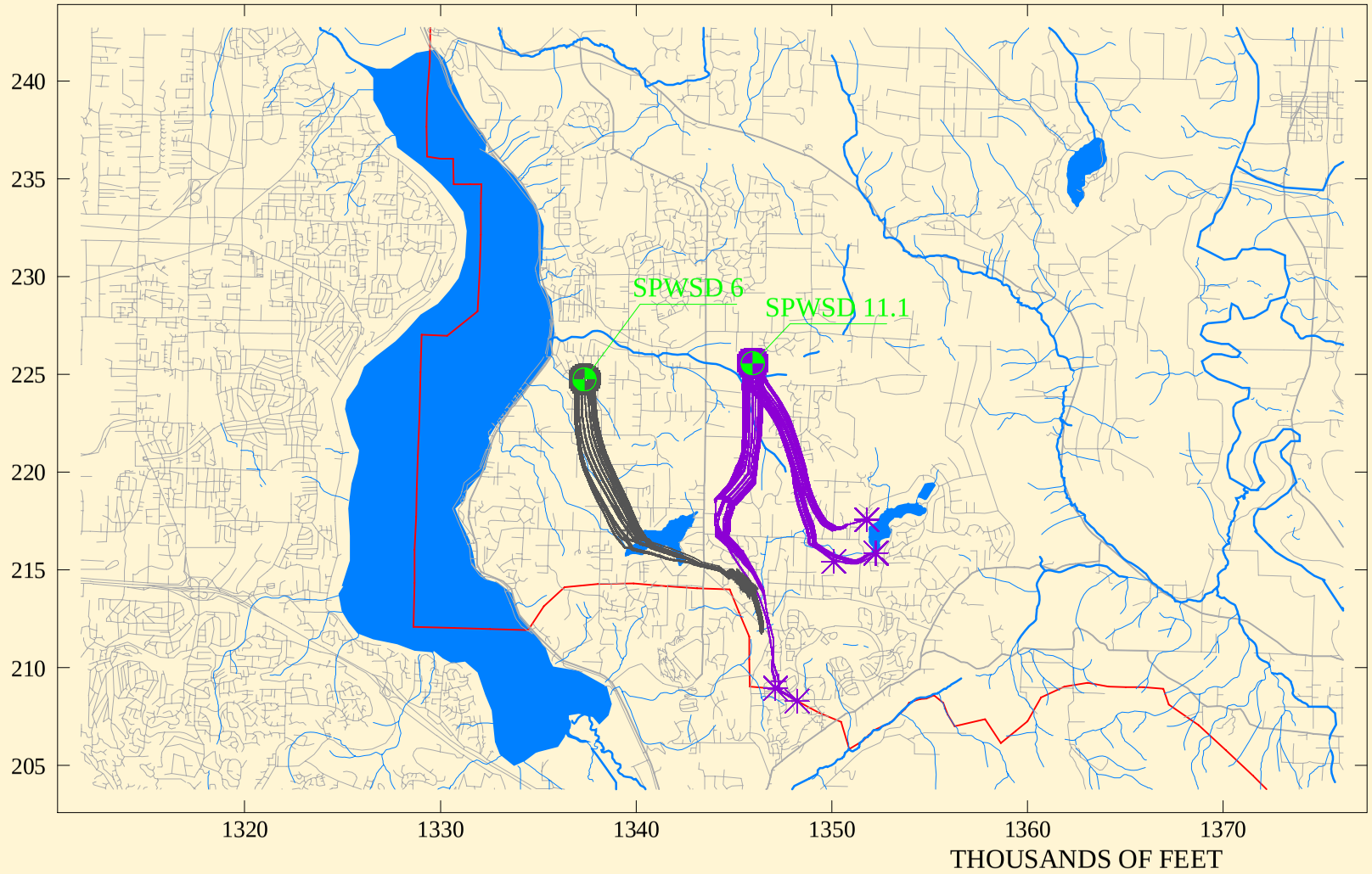

Oct22 07 model2004/sav/tmp.sav

CDM

Simulated Reverse Particle Tracks From Zone III Wells

SPWSD Groundwater Model

FIGURE 4

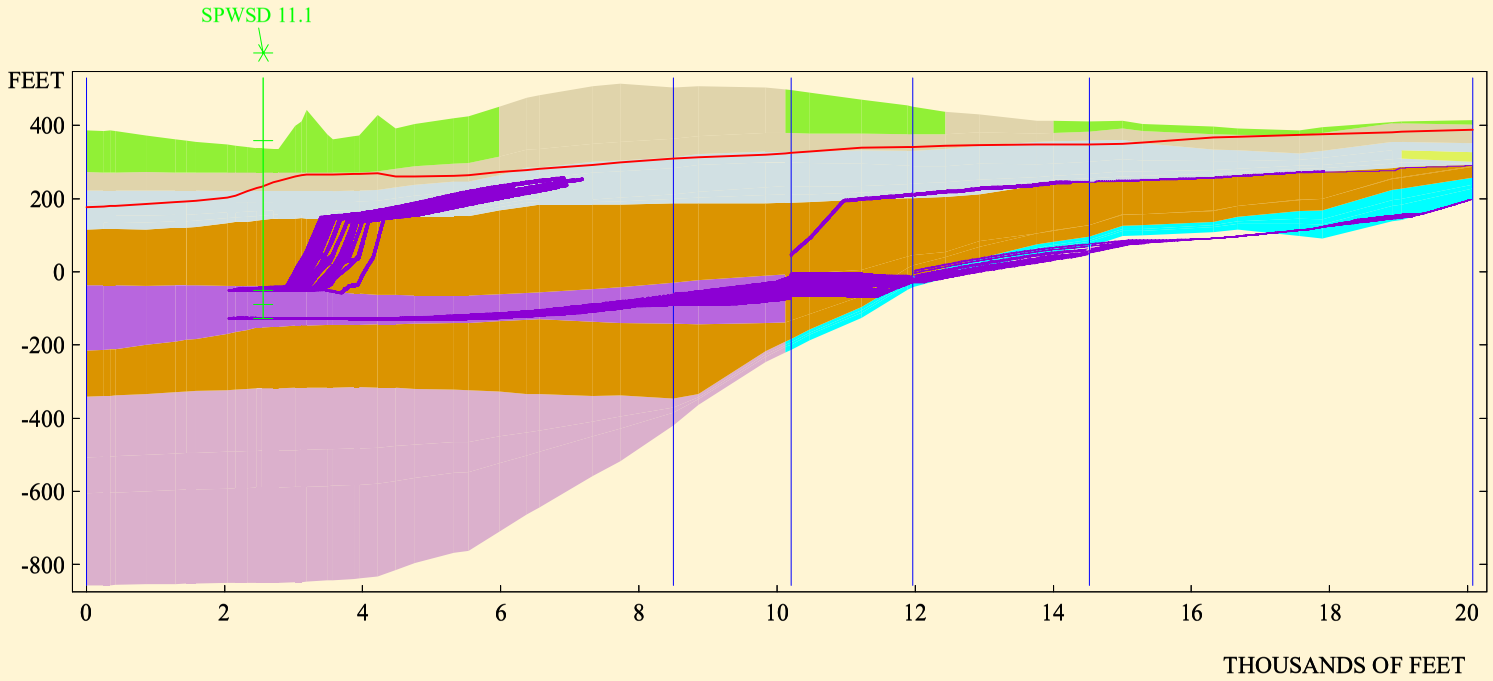

MATERIALS CROSS-SECTION FF

- Zone II Aquitard
- "Ramp"
- Zone I
- Till
- Zone II
- Zone III
- Aquitard
- Zone IV

CROSS SECTION FF

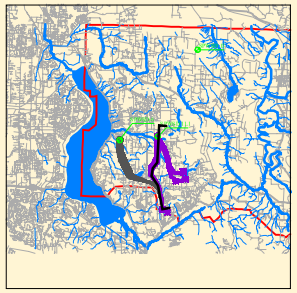

Oct22 07 model2004/sav/tmp.sav

CDM

Reverse Particle Tracks From Zone III Wells in Cross Section
(100 Year Travel Time)

SPWSD Groundwater Model

FIGURE
5

HYDROGEOLOGIC ASSESSMENT AND UPDATE TO LOWER ISSAQUAH VALLEY AQUIFER PRODUCTION WELLS 7, 8 AND 9 PROTECTION AREAS (2017)

This page intentionally left blank.

Sammamish Plateau Water District: Hydrogeologic Assessment and Update to Lower Issaquah Valley Aquifer Production Wells 7, 8 and 9 Wellhead Protection Areas

October 3, 2017

This page intentionally left blank.

Table of Contents

Section 1 Introduction 1-1
1.1 Hydrogeologic Assessment and Groundwater Model Construction 1-1
1.2 Wellhead Protection Area Simulation Process 1-4
1.3 Updated Wellhead Project Areas and Request for Adoption 1-4
Section 2 References 2-1

List of Tables

Table 1-1 SPWSD Project Data Collection Effort **1**-1

List of Figures

Figure 1 Approximate Watershed Boundary
Figure 2 Well Locations
Figure 3 Locations of Cross-Sections Presented in Historical Reports
Figure 4 Cross Section C-C' (From Golder Associates, 1993)
Figure 5 Cross Section A-A' (From Carr Associates, 1993)
Figure 6 Cross Section B-B' (From Golder Associates, 1996)
Figure 7 Well 7 - Wellhead Protection Zone
Figure 8 Well 8 - Wellhead Protection Zone
Figure 9 Well 9 - Wellhead Protection Zone

This page intentionally left blank.

Section 1

Introduction

Under a current groundwater investigation project related to Perfluorinated Chemicals (PFCs) in the Lower Issaquah Valley Aquifer, the Sammamish Plateau Water District (the District) has performed a hydrogeologic assessment that incorporates a comprehensive set of PFC, hydrologic and hydrogeologic data within the Valley Aquifer System. At the direction of the District, these data were evaluated and used by CDM Smith to construct and calibrate a transient 3D numerical groundwater model of the valley aquifer system. The constructed model was subsequently used to develop simulations of varied production well operation by the District, City of Issaquah (the City) and known industrial wells to evaluate risk to the District's water supply wells located in the Issaquah Valley Aquifer and determine the optimum management scheme for well operation in the valley to minimize PFC entrainment (CDM Smith, 2017). In addition to using the newly constructed and calibrated model for understanding the fate and transport of the identified PFC contaminant plume, the District used the more refined model[1] to create updated wellhead protection areas (WHPAs) for their valley aquifer wells 7, 8 and 9.

The information below represents the information required by the City and other land use regulatory agencies to adopt the updated WHPA capture zones for the District's Lower Issaquah Valley Aquifer Production Wells 7, 8 and 9.

1.1 Hydrogeologic Assessment and Groundwater Model Construction

Table 1 below presents the data collection and subsequent evaluation effort that SPWD performed for the hydrogeologic assessment and transient 3D numerical groundwater model development and calibration.

Table 1-1 LFT SPWSD Project Data Collection Effort

Data Request List			
Item	Parameter	Data Period	Data Comment
Well Lithology Logs and Construction Drawings and Well Site Drawings	Well lithology descriptions, total and screen completion depths.		Includes both production and monitoring wells
	Well site drawings and layouts showing storage tanks, treatment facilities, etc.		
Well Capacities, Production History, and Utilization	All Production Wells	2006-2016	Monthly data

[1] The previous modeled WHPA capture zones are based on a 1993 analytical model that does not incorporate groundwater flow through multiple aquifer and aquitard layers in 3-dimensions

Aquifer Testing Data	Water Level and Hydraulic Test Results from Aquifer Testing at Production and Monitoring wells, or any geophysical testing data		Aquifer Testing Data from recent aquifer tests
Long-Term Water Level Data	Water Level Records from Production and Monitoring Wells collected manually and from automated datalogging systems at hourly to daily intervals	2006-2016	
Water Quality Data	All Production and Monitoring Wells	2006-2016	All water quality parameters available electronically

The groundwater model simulates transient groundwater flow patterns using available data for the period of 1/1/2015 through 12/31/2016 and the hydrogeologic framework documented in the following:

- Report on Impacts of Increased Pumping from Wells 7 and 8 (Carr Associates, 1990)
- Evaluation and Interpretation of Well 9 Pumping Test (Carr Associates, 1993)
- Lower Issaquah Valley Wellhead Protection Plan (Golder Associates, 1993)
- Issaquah Creek Valley Ground Water Management Plan (Issaquah Creek Valley Ground Water Advisory Committee, 1994)
- Geophysical Investigation of the Lower Issaquah Valley (Golder Associates, 1996)
- Hydrogeological Characterization Report (Geosyntec, 2016)
- Summary of Perfluorinated Compounds (PFCs) Results for Water Samples Collected January 5, 2017 (Corona, 2017)

The numerical groundwater flow model simulates the movement of groundwater, and the discharge of groundwater baseflow to surface streams, based on model assignments of water balance inputs (recharge) and outputs (pumping) over the simulation period.

The period between 1/1/2015 and 12/31/2016 is considered the hydraulic (groundwater flow field) calibration period, during which the model utilizes available data, including the more recent COI monitoring wells drilled and constructed in 2016, and relies on estimates where data gaps exist. The model is calibrated to piezometric heads.

DYNSYSTEM groundwater modeling software was utilized for groundwater model construction, including DYNFLOW (groundwater flow), and DYNTRACK (solute transport). DYNFLOW is a fully three- dimensional, finite element groundwater flow model code. This code has been developed over the past 40 years by CDM Smith engineering staff, and is in general use for large scale basin modeling projects and site specific remedial design investigations. It has been applied to over 200

groundwater modeling studies in the United States. The DYNFLOW code has been reviewed and tested by the International Groundwater Modeling Center (IGWMC) (van der Heijde 1985, 2000) and has been extensively tested and documented by CDM Smith.

DYNTRACK is the companion solute transport code to DYNFLOW. DYNTRACK uses the random-walk technique to solve the advection-dispersion equation. DYNTRACK has been developed over the past 35 years by CDM Smith engineering staff and has also been reviewed and tested by the IGWMC (van der Heijde 1985).

Conceptual Model

The conceptual model of groundwater flow within the study area is summarized below:

- The approximate boundaries of the watershed are depicted in **Figure 1**. The watershed spans approximately 42,000 acres and includes both valley and upland components.
- Groundwater flow in the uplands is generally towards the valley, following the steep slope of bedrock. Once in the valley, ambient (non-pumping condition) groundwater flow is towards the regional groundwater discharge point, Lake Sammamish. The in-valley groundwater flow direction is towards the northwest.
- Groundwater recharge occurs both in upland and valley areas, though the percentage of rainfall that becomes recharge is higher in the valley than in the uplands, as described in the Issaquah Creek Valley Ground Water Management Plan (Issaquah Creek Valley Ground Water Advisory Committee, 1994).
- The groundwater flow field is influenced locally by water supply and industrial well pumping. The locations of these wells, characterized as COI wells, District wells, and industrial wells are shown in **Figure 2**. Monitoring wells referenced in this study are also included on this figure.
- Groundwater provides baseflow to several streams that ultimately discharge to Lake Sammamish. The flow of groundwater towards these streams is evident near the ground surface, but not in deeper formations. The major streams in the study area are highlighted in **Figure 2**.
- Hydrogeologic cross-sections constructed from soil borings and well logs from the references noted above depict a system of alternating aquifers and leaky aquitards present from ground surface to the contact with underlying bedrock, which is assumed to be the bottom of the aquifer system. The locations of cross-sections developed during earlier studies are shown in plan view and color coded by source reference in **Figure 3**.
- The cross-sections show that in addition to surficial water bearing units that are in direct hydraulic connection with surface streams, there are 2 distinct and relatively continuous semi-confined aquifers, characterized herein as the A Sand and B Sand aquifers. In the Well 9 Aquifer Performance Test Report (Carr, 1993), an additional C Sand aquifer is delineated,

though the hydraulic connection between this C Sand aquifer and the B Sand aquifer is either spatially variable or not consistently defined in the above references. A selection of three cross sections, C-C' from Golder Associates (1996), A-A' from Carr (1993), and B-B' from Golder Associates (1996), are included as **Figures 4, 5,** and **6**, respectively, to illustrate the presence of these hydrostratigraphic layers.

1.2 Wellhead Protection Area Simulation Process

To estimate the WHPAs, baseline future conditions, as described in detail in CDM Smith, 2017, were used to generate the hydraulic conditions from which water movement was assessed. These baseline conditions include monthly-varying inputs of pumping and recharge rates, indicative of the large seasonal variations observed within the aquifer system. Model inputs (including monthly pumping for each public supply and industrial well) and output in the form of simulated piezometric head contours for each month simulated are included in CDM Smith, 2017. These simulations indicate that month-to-month operational variation in well usage causes differences in groundwater flow directions and well capture throughout a typical operating year. The model simulations used to estimate the WHPAs incorporate these seasonal variations in operation. As a result, the capture simulations for each District Lower Issaquah Valley production well are simulated under a transient seasonal operational pattern rather than under a combined simultaneous steady-state pumping scenario[2]. This better represents how the District Valley production wells are operated.

Numerical particle tracking was then used to estimate the 3-dimensional extent of hydraulic capture that represents the Wellhead Protection Areas for each of wells 7, 8, and 9 over a 1, 5 and 10-year duration, assuming baseline future conditions.

1.3 Updated Wellhead Project Areas and Request for Adoption

Figures 7, 8 and 9 present the updated WHPAs determined from the district numerical groundwater flow model. Based on the updated hydrogeologic information, the District request all land use review agencies adopt these updated WHPAs for District Wells 7, 8 and 9 into their critical aquifer recharge area maps and ordinances.

[2] The 1993 analytical WHPA capture zones were representative of simultaneous combined pumping.

Section 2

References

Carr Associates, 1990. Report on Impacts of Increased Pumping from Wells 7 and 8, December 7, 1990.

Carr Associates, 1993. Evaluation and Interpretation of Well 9 Pumping Test, October 25, 1993.

CDM Smith, 2017. Groundwater Model Development and Applications for PFC Risk Mitigation, April 17, 2017.

Corona, 2017. Summary of Perfluorinated Compounds (PFCs) Results for Water Samples Collected January 5, 2017, January 18, 2017.

Geosyntec Consultants, 2016. Hydrogeological Characterization Report Issaquah, Washington, November 2016.

Golder Associates, 1993. Lower Issaquah Valley Wellhead Protection Plan, November 1993.

Golder Associates, 1996. Geophysical Investigation of the Lower Issaquah Valley, Issaquah, Washington, December 18, 1996.

International Ground Water Modeling Center, 1985. *Review of DYNFLOW and DYNTRACK Groundwater Simulation Computer Codes*. Report of Findings by Paul K.M. vab der Heijde for

U.S. Environmental Protection Agency. IGWMC 85-17

Issaquah Creek Valley Ground Water Advisory Committee, 1994. Issaquah Creek Valley Ground Water Management Plan, December 1994.

van der Heijde, Paul K.M., 1999. DYNFLOW Version 5.18: Testing and Evaluation of Code

This page intentionally left blank to allow for double-sided printing.

Figures

This page intentionally left blank to allow for double-sided printing.

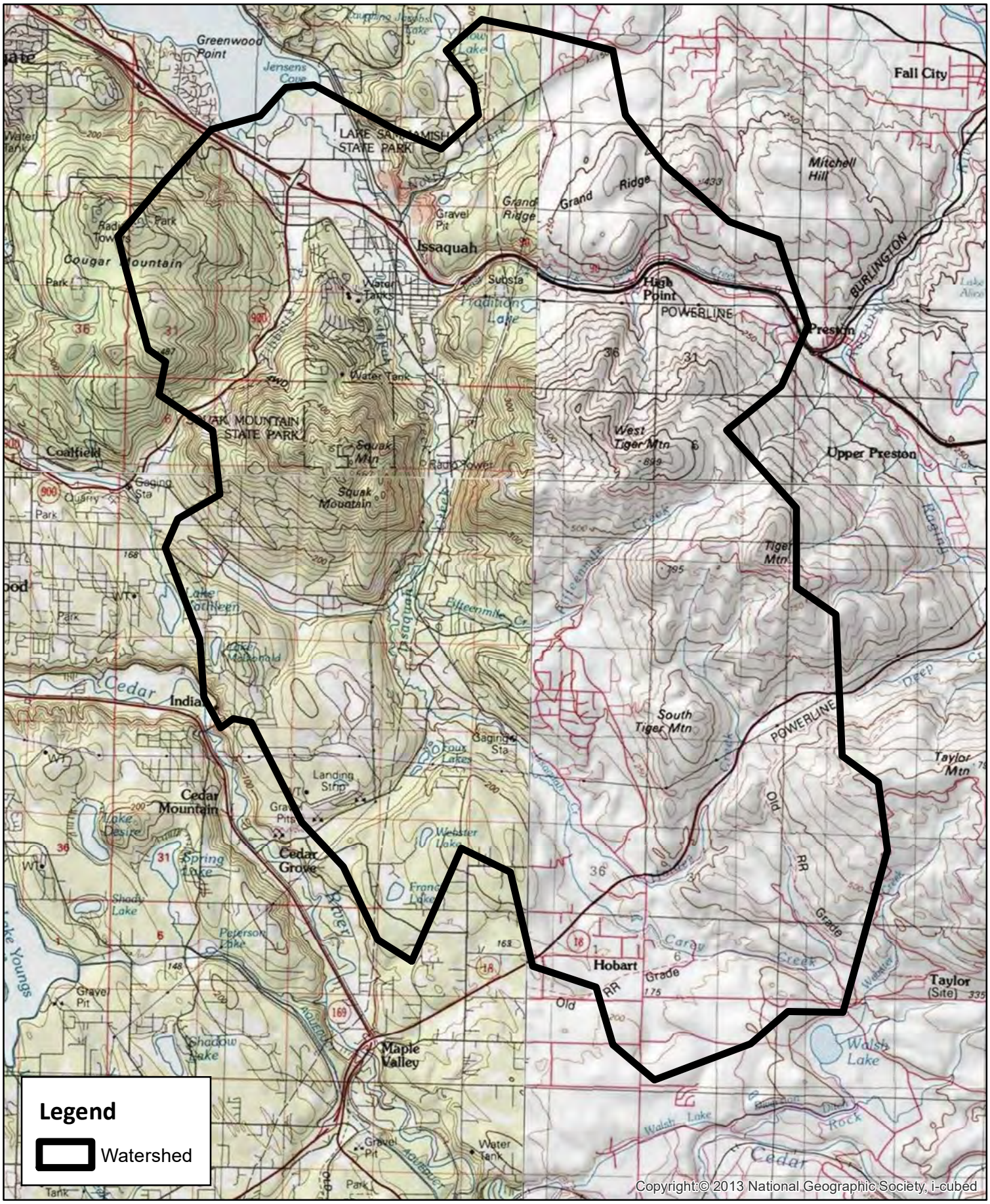

CDM Smith

N

0 2,500 5,000 10,000 Feet

Figure 1
Approximate Watershed Boundary
Sammamish Plateau Water

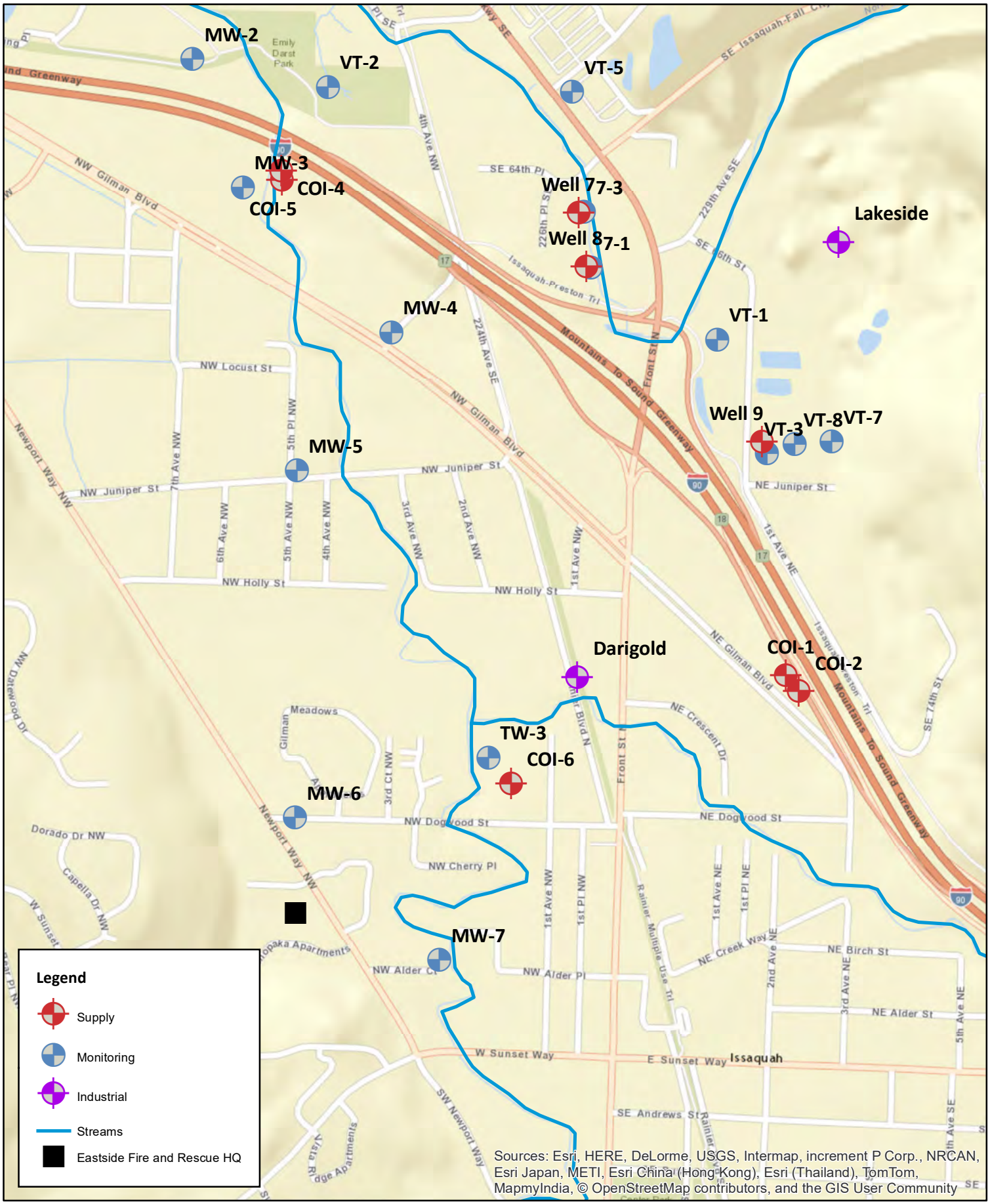

CDM Smith

N

0 250 500 1,000 Feet

Figure 2
Well Locations
Sammamish Plateau Water

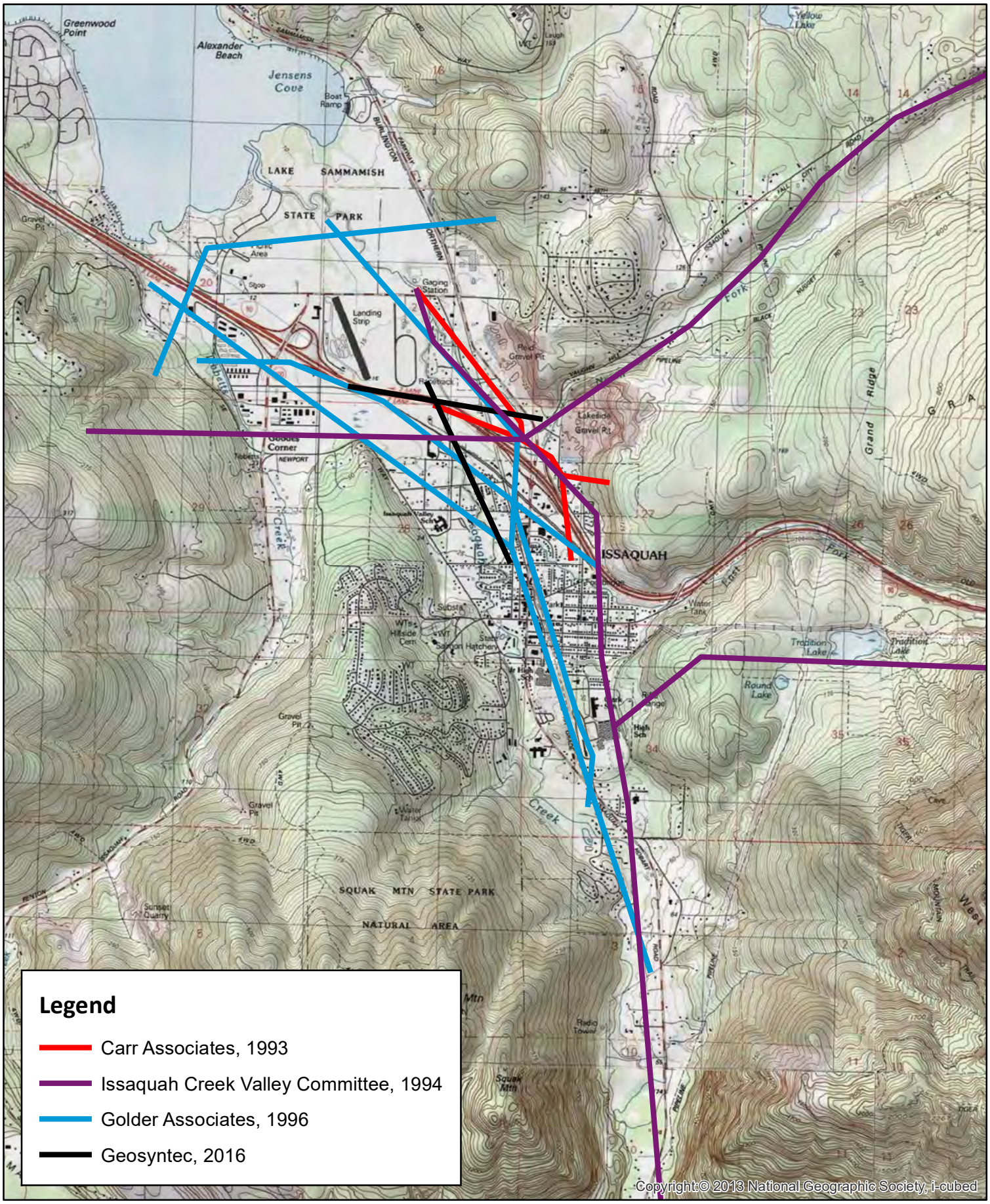

CDM Smith

N

0 1,000 2,000 4,000 Feet

Figure 3
Locations of Cross-Sections Presented in Historical Reports
Sammamish Plateau Water

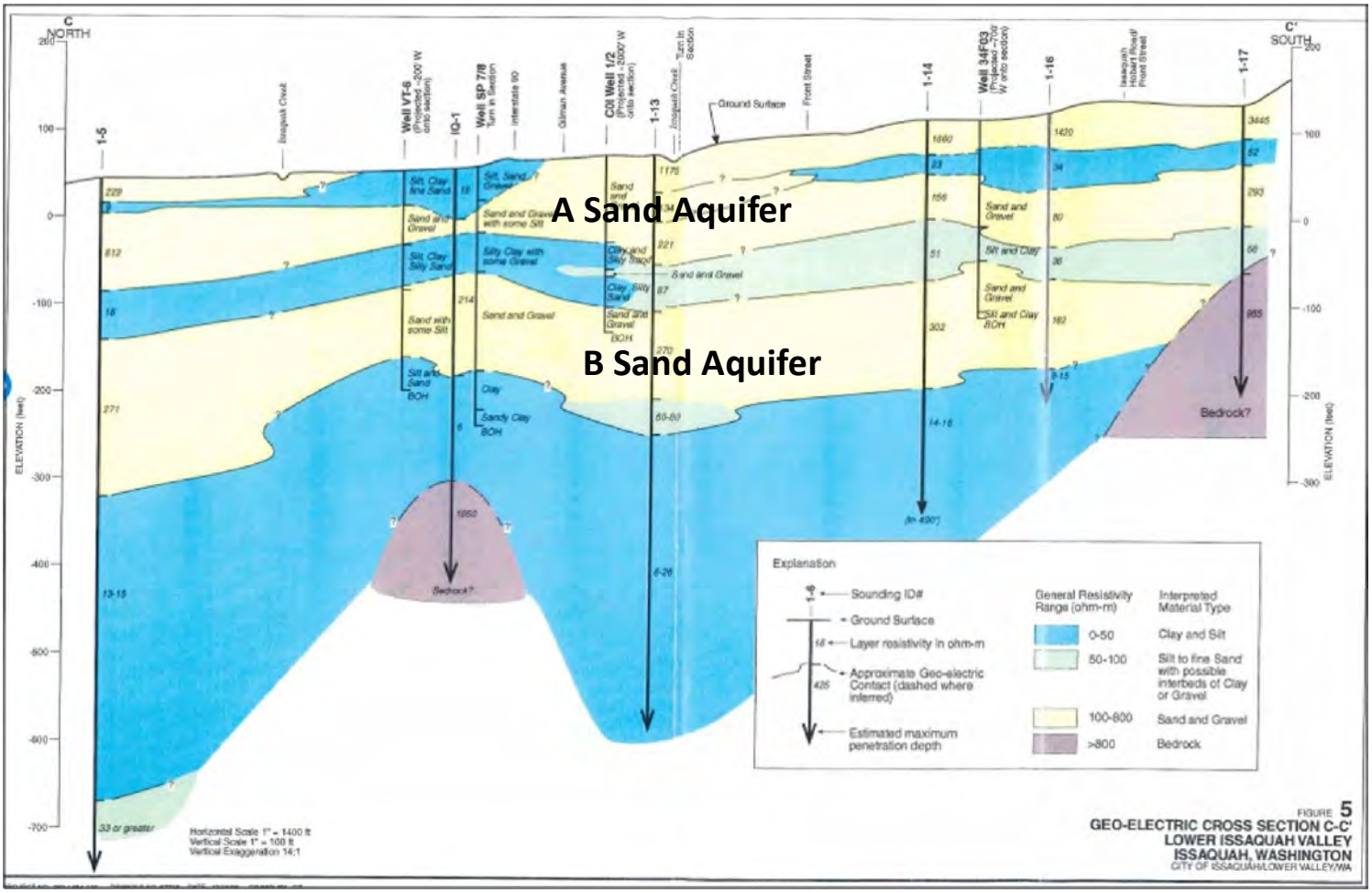

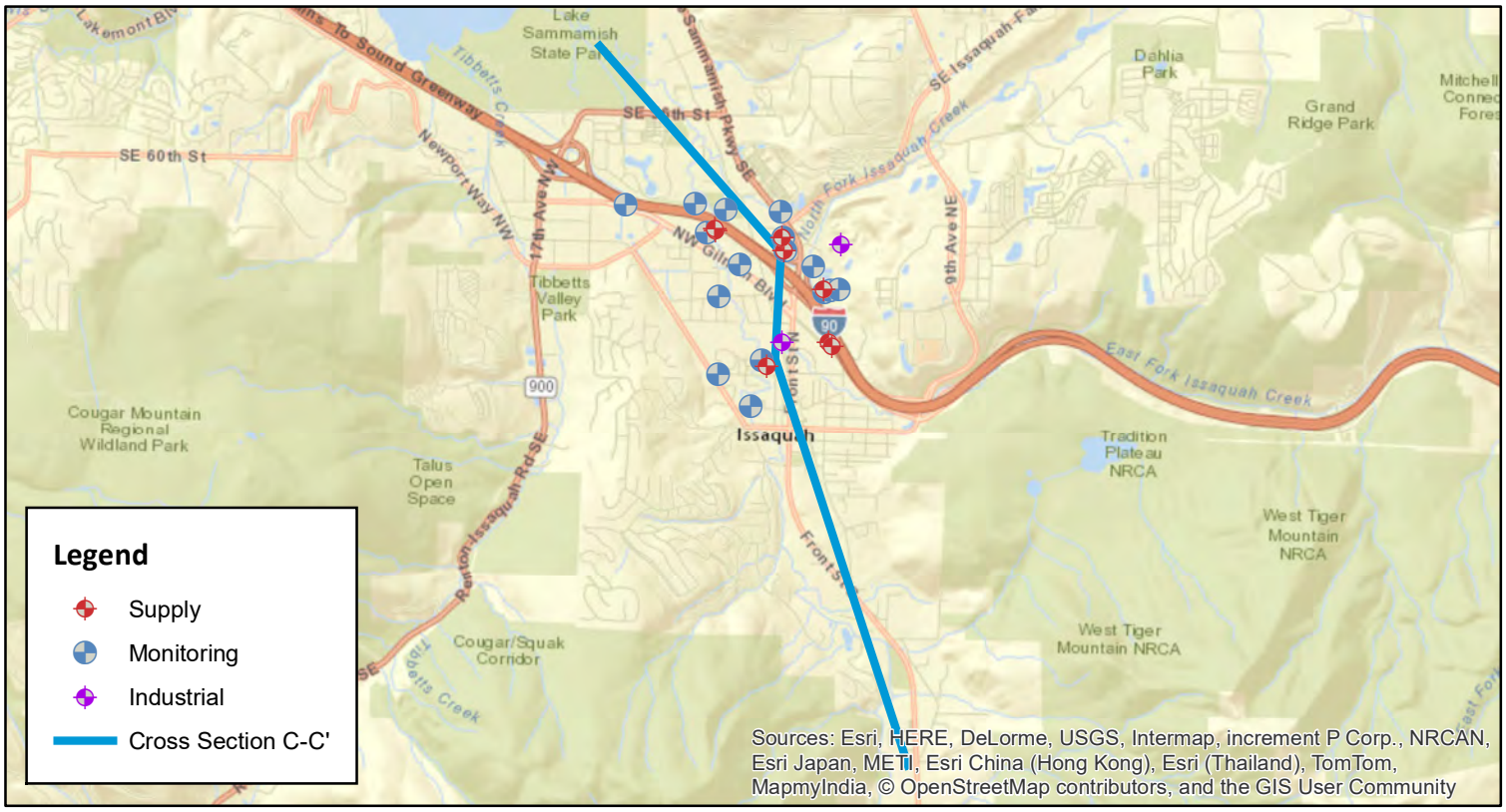

CDM Smith

N

0 1,625 3,250 6,500 Feet

Figure 4
Cross Section C-C' (From Golder Associates, 1993)
Sammamish Plateau Water

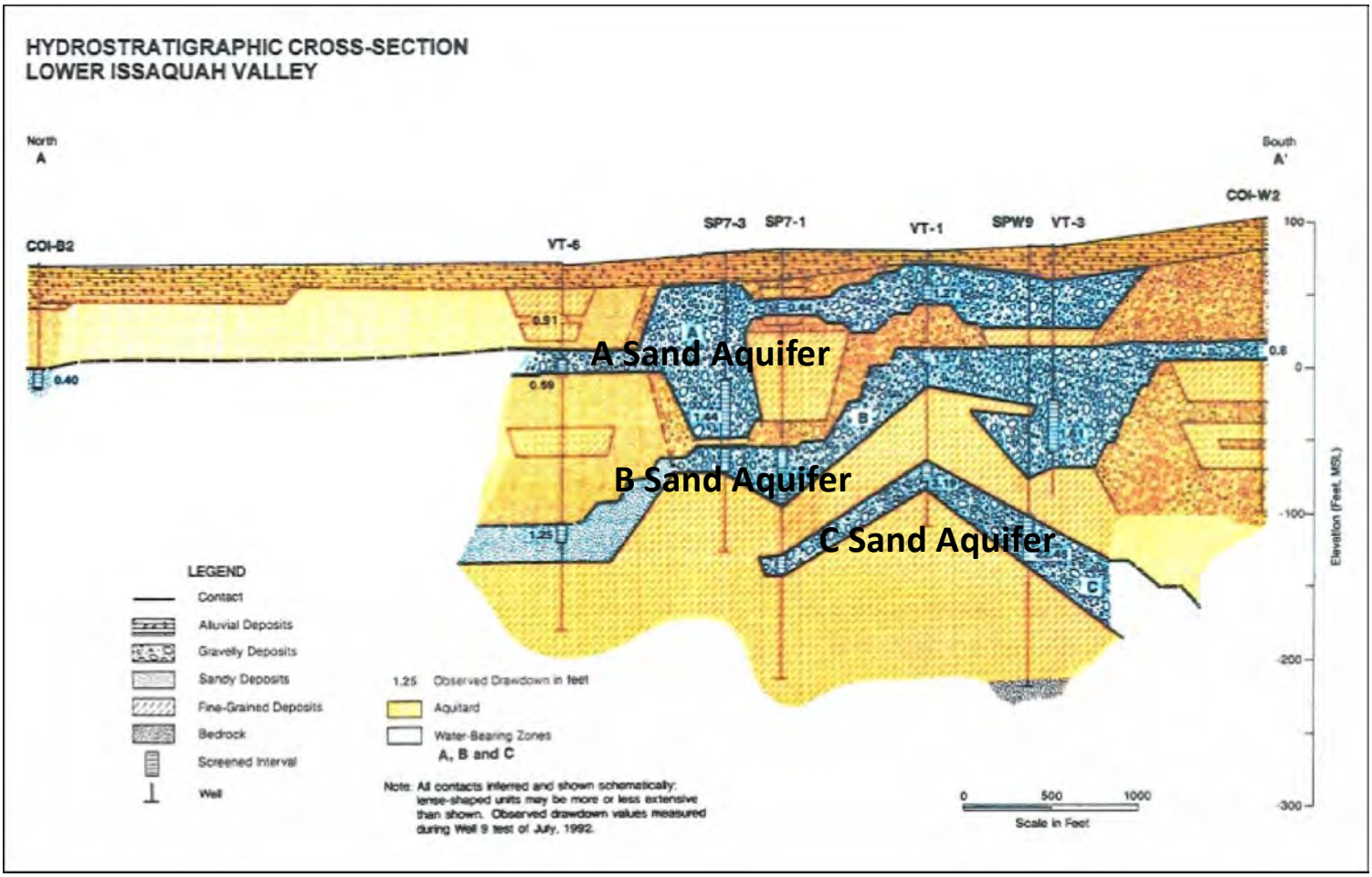

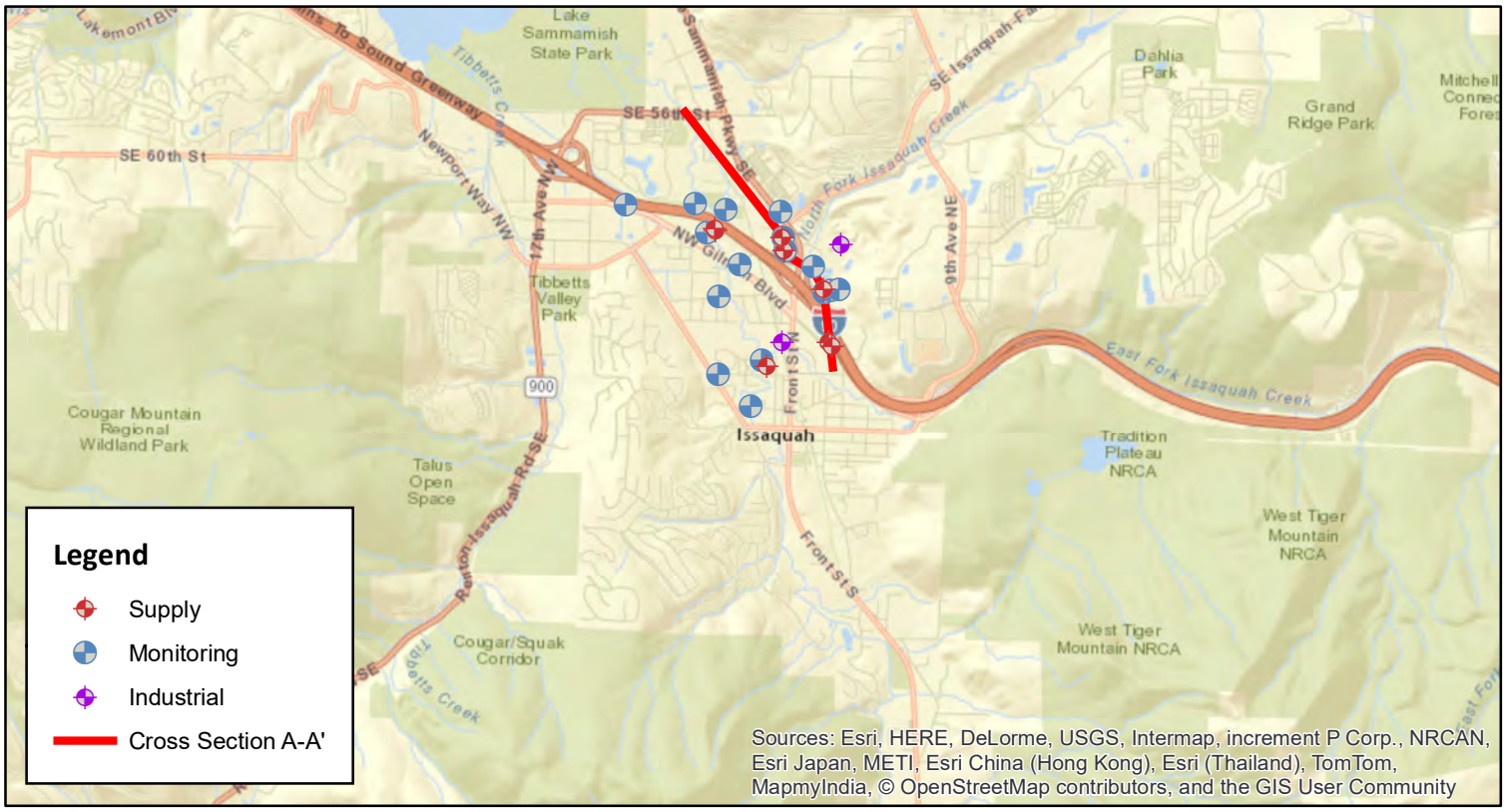

CDM Smith

N

0 1,625 3,250 6,500 Feet

Figure 5
Cross Section A-A' (From Carr Associates, 1993)
Sammamish Plateau Water

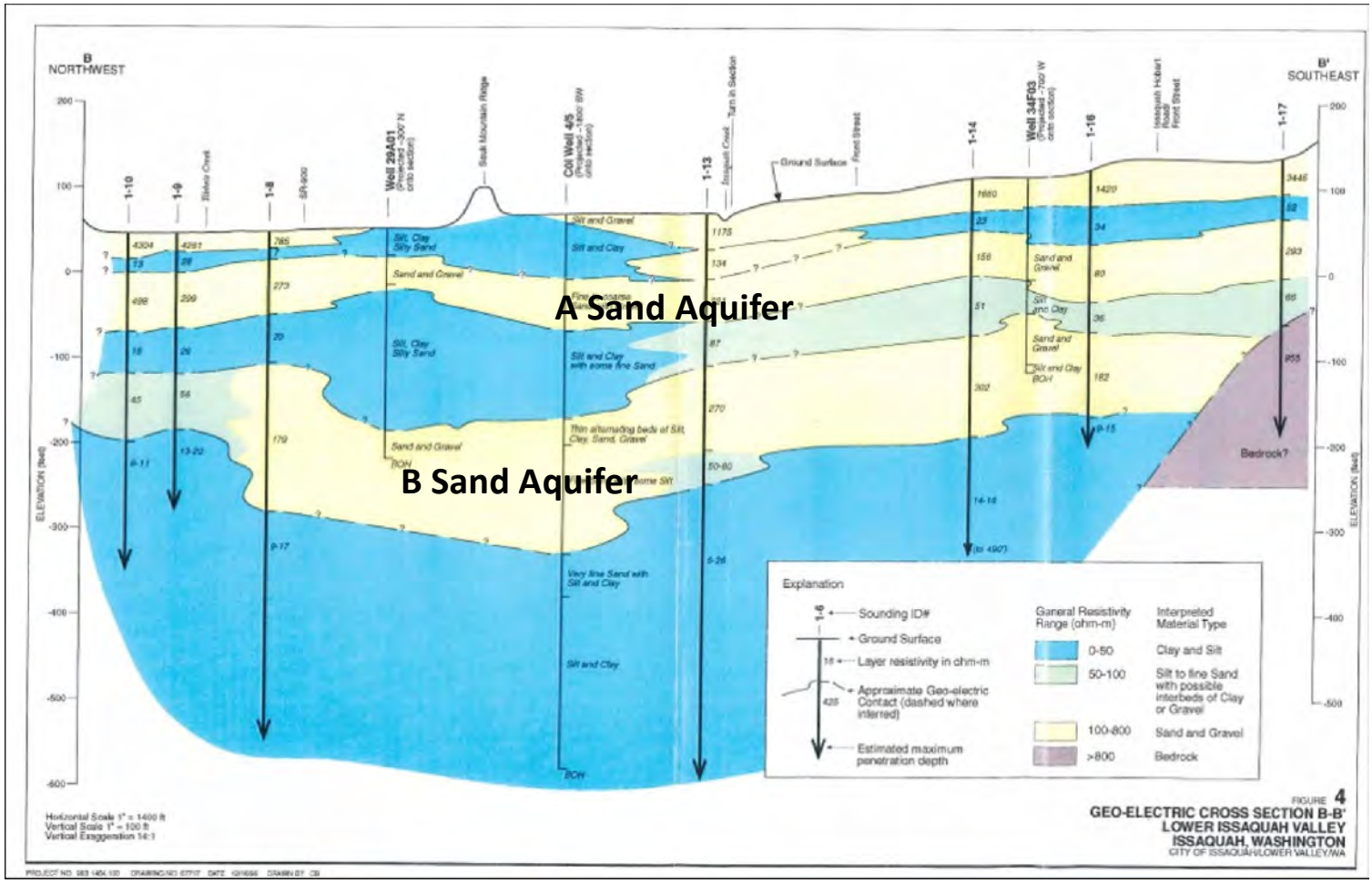

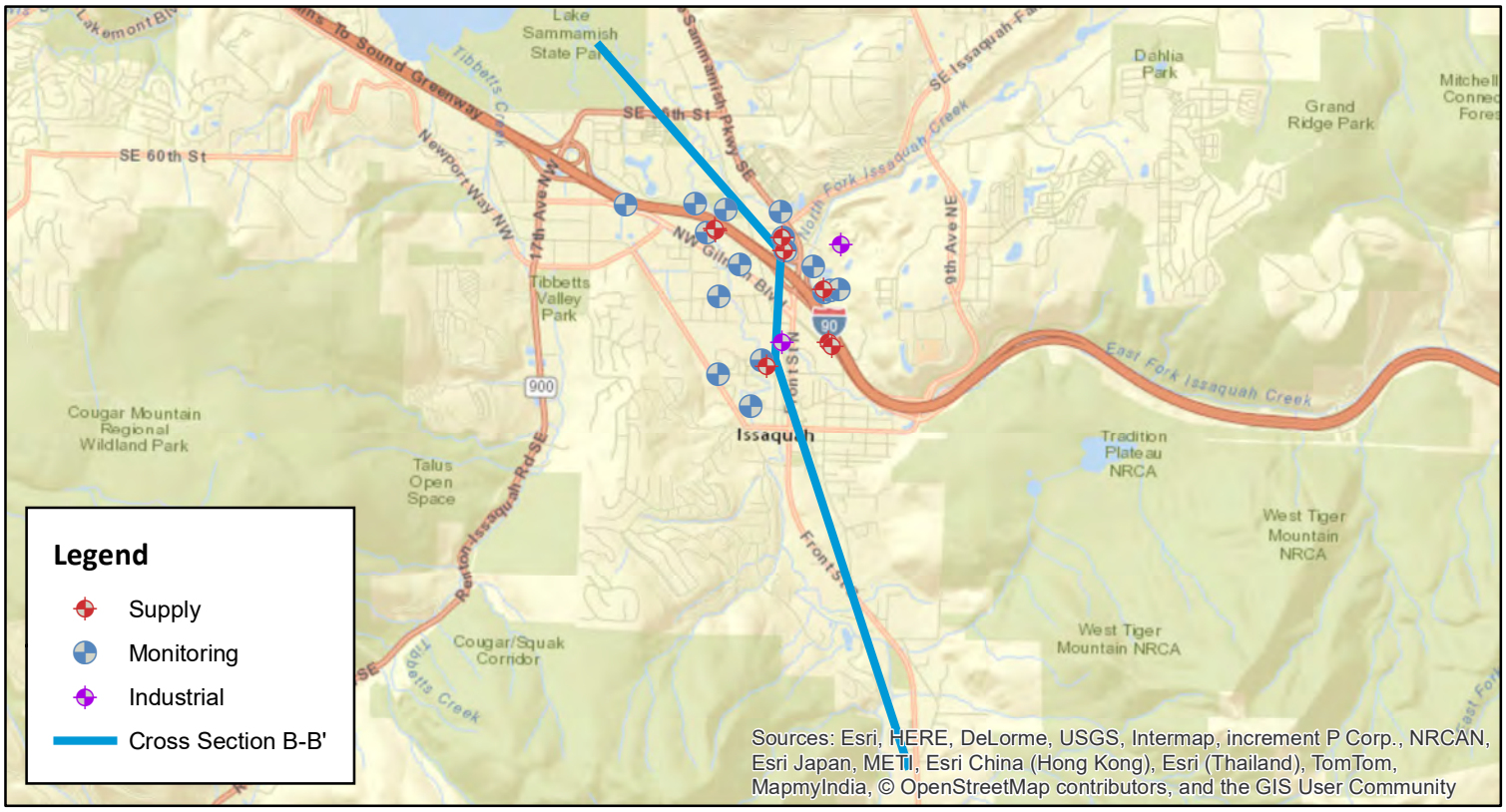

CDM Smith

N

0 1,625 3,250 6,500 Feet

Figure 6
Cross Section B-B' (From Golder Associates, 1996)
Sammamish Plateau Water

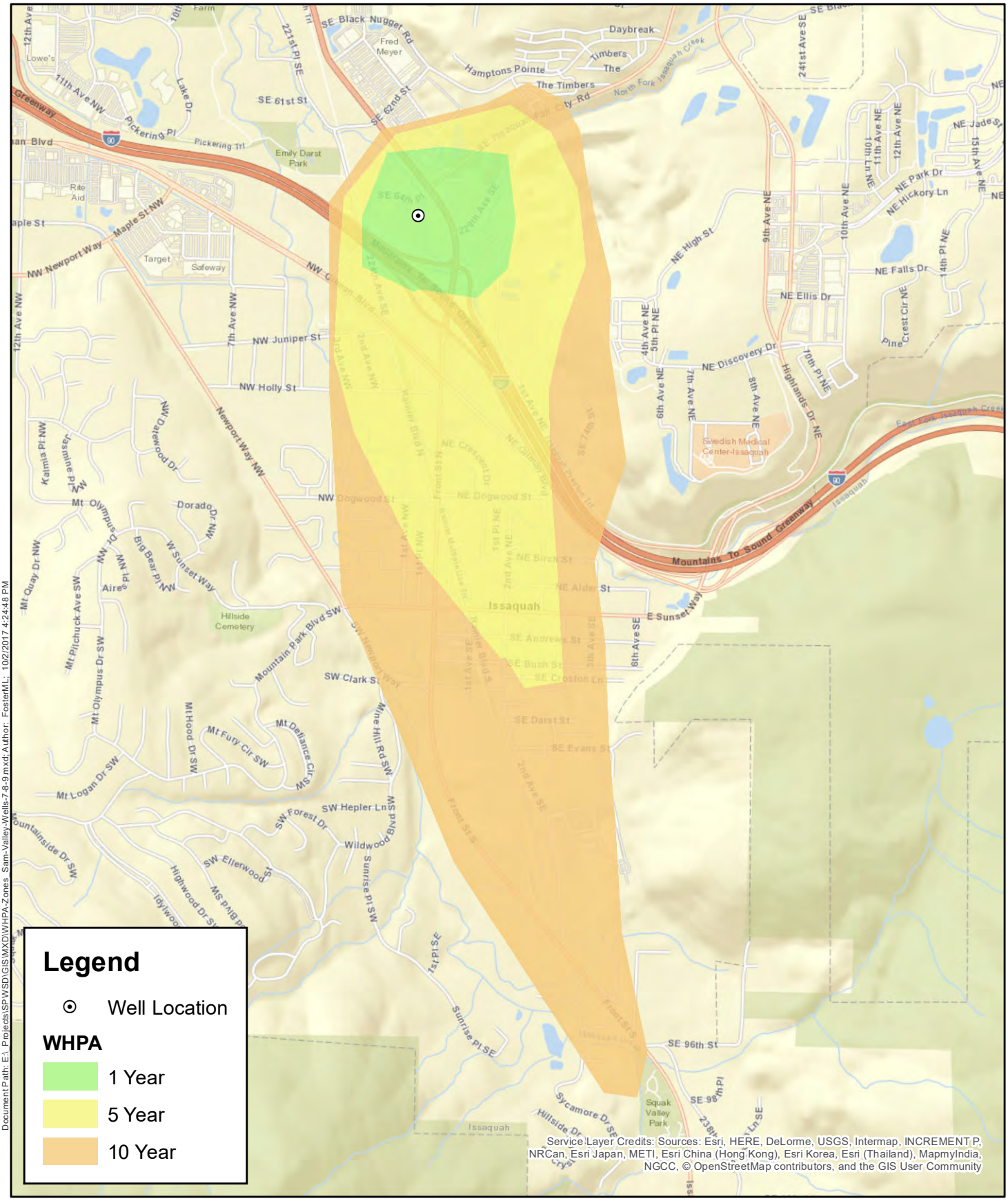

CDM Smith

N

0 1,000 2,000 Feet

Figure 7
Well 7 - Wellhead Protection Zone
Sammamish Plateau Water

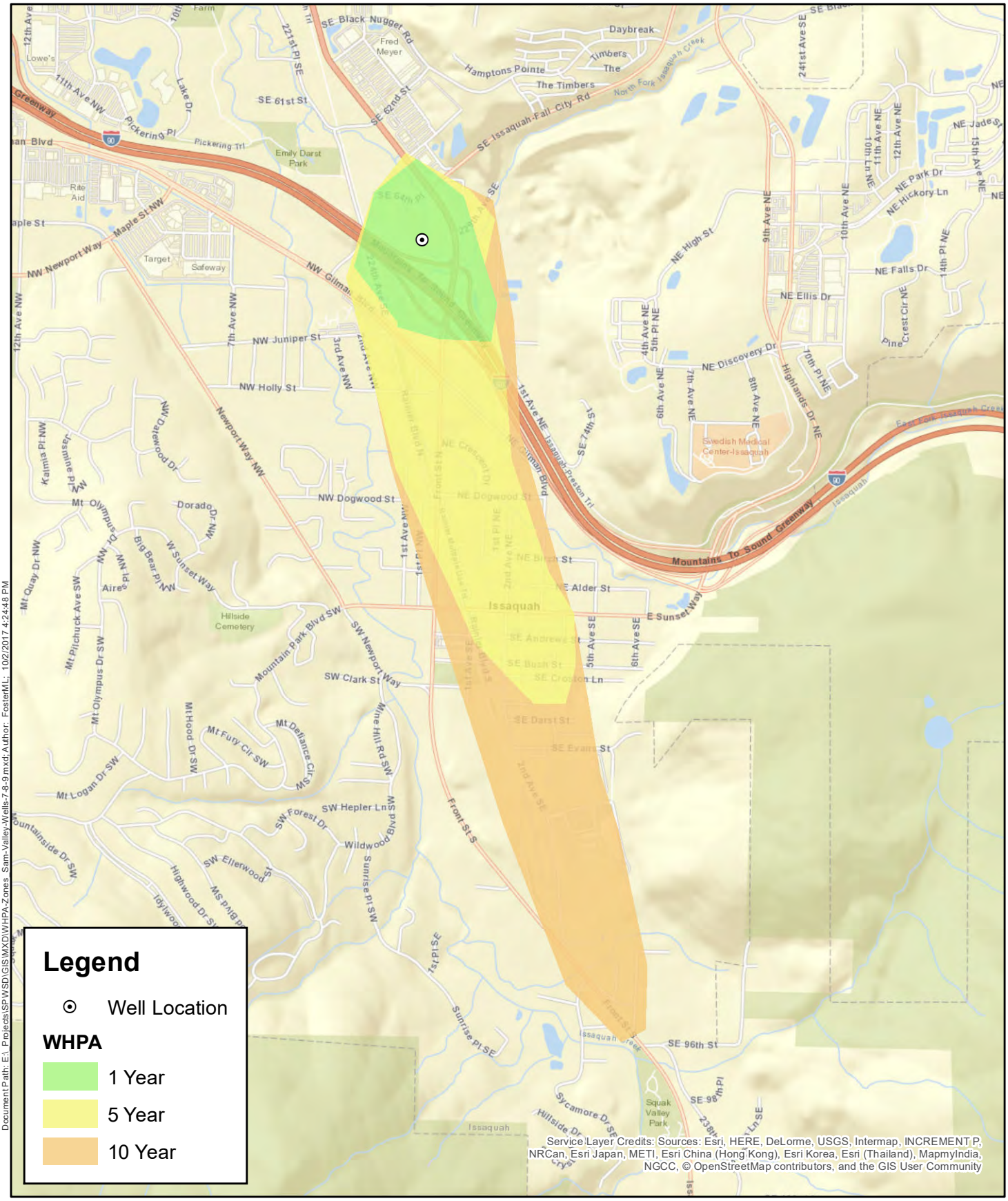

CDM Smith

N

0 1,000 2,000 Feet

Figure 8
Well 8 - Wellhead Protection Zone
Sammamish Plateau Water

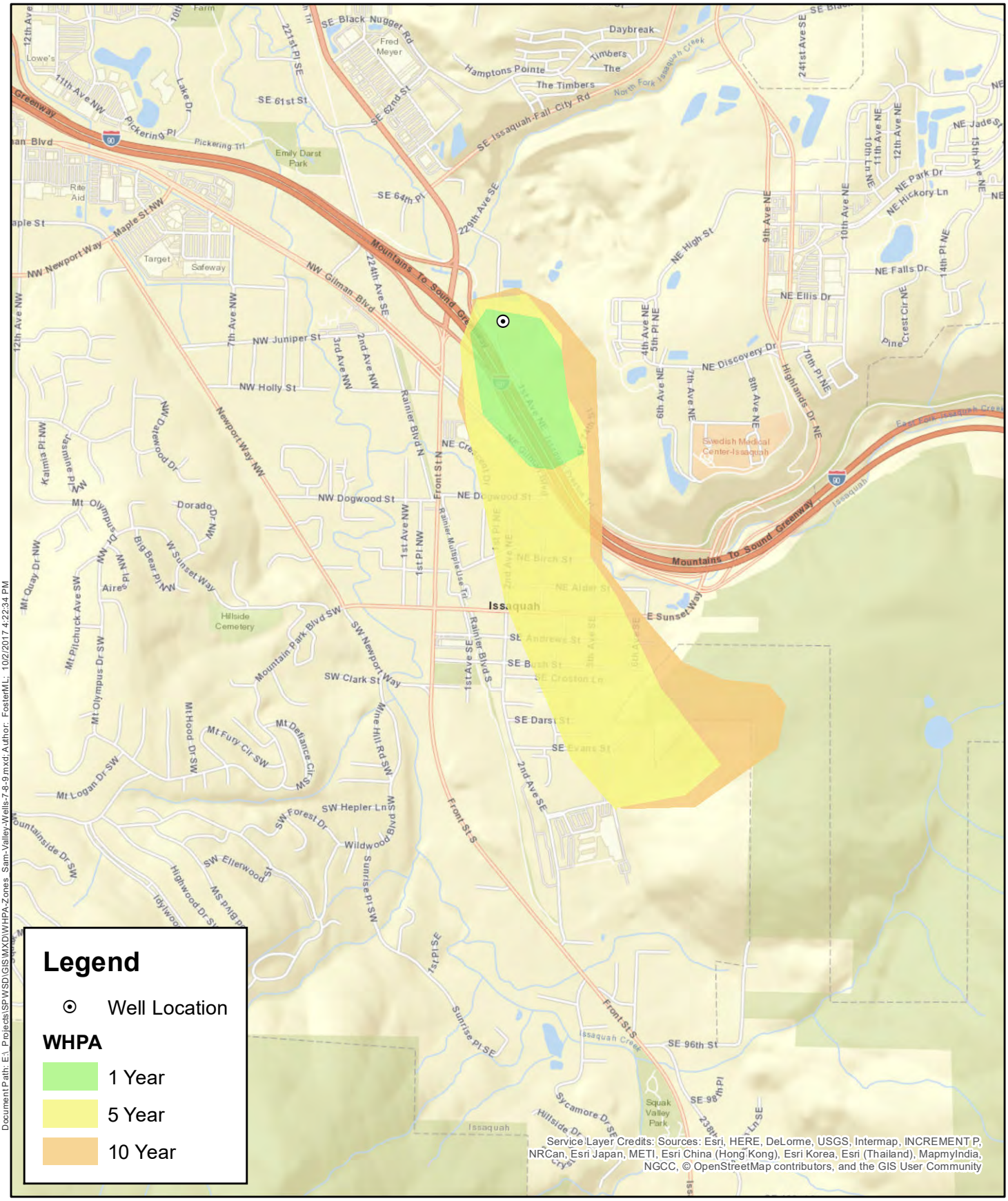

CDM Smith

N

0 1,000 2,000 Feet

Figure 9
Well 9 - Wellhead Protection Zone
Sammamish Plateau Water

This page intentionally left blank.

Appendix Q

Spill Incident Response Plan

This page intentionally left blank.

APPENDIX Q

Spill/Incident Response Plan

The wellhead protection program (WHPP) requires that a Spill/Incident Response Plan be devised to specify the emergency responders that must be contacted in the event of a contaminated spill within the wellhead protection areas (WHPA) in the Lower Issaquah Valley, the Sammamish Plateau and the Cascade View zones. The responders were contacted to confirm their role and level of participation in response activities. This response planning section was prepared after discussion with each of the following agencies:

- Eastside Fire and Rescue
- Fall City Fire Department (King County Fire District 27)
- Redmond Fire Department (King County Fire District 34)
- Eastside Hazardous Materials Team
- City of Sammamish Police
- City of Issaquah Police
- King County Sheriff's Office
- Washington State Highway Patrol
- King County Emergency Management Division
- Washington State Military Department's Emergency Management Division
- Department of Ecology's Emergency Response NW Section
- Washington State Department of Public Health

Coordination

Incidents will be managed by a unified command made up of local, county, and state agencies. Each political jurisdiction was given the choice of accepting incident command of spills at facilities and on surface roads within their jurisdiction, with the exception of state and interstate highway corridors. Eastside Fire and Rescue has accepted this responsibility for this leadership. The incident command does not imply any inherent ability to provide resources or trained manpower to respond to a spill within their jurisdiction. The command's role is to provide trained leadership and management of existing resources to respond to such an emergency.

Eastside Fire and Rescue, Redmond Fire Department (King County Fire District 34), and other fire departments and districts have contracted with the Eastside Hazardous Materials Team. The Eastside Hazardous Materials Team operates out of Bellevue Fire Department Station 6.

The King County Hazardous Materials Emergency Division, part of the King County Emergency Management Division, has devised a Resource Plan which outlines direction, control and legal authority in regards to emergency situations. The plan has recommended procedures for the incident commander. The purposes of the plan includes:

- Provide timely warning and notification of affected populations.
- Coordinate and acquire resources.
- Coordination, evacuation and damage assessment.
- Identify areas most vulnerable to possible hazardous material related accidents.

Within the plan, the King County Emergency Operation Center (EOC) is defined as a focal point for coordination of emergency responses. The EOC may be activated by a fire service incident commander, municipality, or the King County office of Emergency Management Duty Officer. Upon activation, relevant agencies are required to send a representative to the EOC so that activities may be coordinated and acquire resources to maximize the effect of responses.

Notification Procedures

In the event of a serious hazardous materials spill or incident, the first phone number to call for emergency response to a spill affecting the WHPA is 911. The 911 operator has the ability and resources to contact all relevant responders and will first contact the Eastside Fire and Rescue/Hazardous Materials Team and the appropriate law enforcement agency, depending on the location of the spill. The first responders are responsible for identifying the nature and extent of the spill, isolating the area, evacuating the affected public and distributing information to the other agencies.

The 911 operator next contacts the duty officer at the Washington State Military Department's Emergency Management Division. They in turn will contact the duty officer at the King County Emergency Management Division, the Department of Ecology, and the Washington State Patrol (if the spill occurs on a Washington State Right of Way).

Relevant Emergency Responders

All relevant agencies and offices were contacted via telephone to verify their location, phone number, and general function as an emergency responder. This information is listed in Table Q-1. It is imperative that '911' be the first number that is called in the event of an incident. The phone numbers listed in this table should be used for general information about that agency, though these offices have the ability and resources to contact the appropriate responders.

The agencies listed in Table Q-1 were asked the questions listed below. A summary of the various discussions follows.

- What is your area of jurisdiction?
- How are you notified about a spill/incident?
- What is your primary responsibility in regards to a spill/incident?
- What are you not responsible for in regards to a spill/incident?

TABLE Q-1
General Information for Spill/Incident Responders

Agency	Address	Non-Emergency General Information Phone Number[1]
Eastside Fire and Rescue	175 Newport Way Issaquah, WA 98027	425-313-3200
Fall City Fire Department (King County Fire District 27)	4301 334th PL SE Fall City, WA 98024	425-222-5841
Redmond Fire Department (King County Fire District 34)	8450 161st Ave NE Redmond, WA 98052	425-556-2200
City of Sammamish Police	482 228th Ave NE Sammamish, WA 98074	425-836-5674
City of Issaquah Police	135 East Sunset Way Issaquah, WA 98027	425-391-1035
King County Sheriff's Office	516 3rd Ave South Seattle, WA 98104	206-296-3311
Washington State Highway Patrol	2803 156th Ave SE Bellevue, WA 98007	425-649-4370 ext. 0
King County Emergency Management Division	7300 Perimeter Road Seattle, WA 98108	206-296-3830
Washington Military Department Emergency Management Division	Camp Murray Tacoma, WA 98430-5122	800-258-5990
Department of Ecology's Spill Response NW Section	1112 SE Quince Street Olympia, WA 98504	425-649-7000
Washington State Department of Public Health – Northwest Regional Office	1511 Third Avenue Suite 719, MS: K17-12 Seattle, WA 98101	206-464-7670
Eastside Hazardous Materials Team (Bellevue Fire Department Station 6)	1850 132nd Ave NE Bellevue, WA 98005	425-452-4306

[1]Call 911 in the event of an emergency. General Information phone numbers are provided for reference.

Eastside Fire and Rescue

Eastside Fire and Rescue is a consortium of northeast and King County Fire Departments and includes the Fire Department previously know as King County Fire District 10. The WHPAs are within the department's jurisdiction.

Upon receipt of a spill/incident report, the 911 operator will notify the Eastside Fire and Rescue. Their role in regards to a spill involves immediate response, identifying the hazardous nature of the spill, and then securing the area. The department's primary goal is to secure imminent life safety. Next, they will establish safety zones for public protection.

Finally, they will assist the Hazmat teams with stabilization actions, mainly control and extinguishing fires. It is important to note that the department is not responsible for cleanup. When the agency with incident command identifies a situation as stable and contained, the fire department's responsibilities have been met.

Fall City Fire Department (King County Fire District 27)

Part of the Fall City Fire Department's jurisdiction falls within the WHPAs within the limits of the City of Sammamish and unicorporated King County. Upon receipt of a spill/incident report within this jurisdiction, the 911 operator will notify the Fall City Fire Department as well as the Eastside Fire and Rescue. Fall City Fire Department's role in regards to a spill involves immediate response, identifying the hazardous nature of the spill, notifying the Eastside Hazardous Materials Team if necessary, and assisting the police and the Eastside Fire and Rescue in securing the area. Similar to the Eastside Fire and Rescue, the Fall City Fire Department is not responsible for cleanup.

Redmond Fire Department (King County Fire District 34)

The Redmond Fire Department is also part of the Eastside Fire and Rescue consortium. As with the Fall City Fire Department, the Redmond Fire Department has jurisdiction in a small portion of the City of Sammamish and part of the WHPA lies within the department's area of jurisdiction.

Upon receipt of a spill/incident report in this jurisdiction, the 911 operator will notify the Eastside Fire and Rescue and the Redmond Fire Department would respond in one of three ways . If a small quantity of a known, controllable hazardous material was spilled and no injuries were reported, the department would send out one Fire Engine to investigate. If the spill report also indicated there was an injury, the department would send an Engine and an Aid Vehicle. If an unknown hazardous material was reported, the Bellevue Hazardous Material Team (Hazmat Team) operating out of Fire District 6 would be called in.

The Redmond Fire Departments role in regards is the same as the Issaquah Fire Department except that they are not incident command as the Issaquah Fire Department is.

Eastside Hazardous Materials Team

According to the Eastside Hazardous Materials Team Operational Guidelines, in the event of a hazardous materials response, the Eastside Hazmat Team expects that each agency team member's respond to the scene. The first Hazmat Team response will include the following:

- Initiate the Incident Command System
- Advise fire control agencies and other agencies of the nature of the situation
- Evacuate or shelter all unprotected persons including police, fire, EMS, and civilians from danger.
- Establish an initial evacuation zone.
- Identify Hazardous Material.

Hazardous material mitigation will include hazard identification and risk/benefit analysis, creation of a medical group, and decontamination provisions.

City of Sammamish Police

In the event of an incident within the City of Sammamish, the City of Sammamish Police will be notified by the 911 operator, and may be the first agency on site. The City of Sammamish Police Department is responsible for the first incident investigation and securing the area including traffic and pedestrian control. The City of Sammamish Police Department will notify Eastside Fire and Rescue if a hazardous material is discovered to be present. The police will also contact one of the other fire departments if the incident falls within their jurisdiction. The police are not responsible for cleanup or handling any hazardous materials, but will coordinate their efforts with the responding agencies.

City of Issaquah Police

If an incident affecting the WHPA is located within the City of Issaquah, the City of Issaquah Police Department has jurisdiction. They will be notified by the 911 operator and will accept the role of evacuation of affected areas and access restriction into the affected areas. The police are not repressible for cleanup or containment of the incident, but will coordinate their efforts with the responding agencies.

King County Sheriff's Office

If an incident affecting the WHPA is located outside the Sammamish or Issaquah city limits, the King County Sheriff's Office (KCSO) has jurisdiction. Outside Sammamish and Issaquah, the KCSO will be notified by the 911 operator and will accept the role of evacuation of affected areas and access restriction into the affected areas. Like the Issaquah and Sammamish police, the Sheriff's Office is not responsible for cleanup of containment of the incident, but will coordinate their efforts with the responding agencies.

Washington State Highway Patrol

All spills or incidents that occur within the I-90 corridor are under the jurisdiction of the Washington State Highway Patrol. According to the King County Hazardous Materials Emergency Resource Plan, the senior Patrol Officer on the scene will assume incident command/incident management. They will assist with evacuations, scene security, and crowd and traffic control for the affected area. They are not responsible for cleanup or containment, but they will coordinate their efforts with the state and local officials, transportation and environmental/health agencies, and emergency workers.

King County Emergency Management Division

The King County Emergency Management Division primarily serves as a coordinating agent who prepares requests for emergency resources from state or federal agencies. In the event of an incident, a duty-officer is notified and then makes the determination of activating the Emergency Operations Center depending on the severity of the spill. They advise and assist County officials as well as executive heads of political divisions on the direction and control of emergency operations. They provide advice and assistance for

dissemination of emergency information as they also maintain and operate the Emergency Alert System (EAS).

In a non-emergency setting, they coordinate the Local Emergency Planning Committee, which is responsible for developing the King County Hazardous Materials Emergency Resource Plan. The plan coordinates all relevant agencies training and protocols. There is also a public outreach program to educate the public of hazardous materials.

Washington State Military Department's Emergency Management Division

The Washington State Military Department's Emergency Management Division may receive notification from the 911 operator, Fire Department, Ecology's Emergency Management Division, or citizen reports. They have jurisdiction over the entire state and may serve as a coordinating agency for cleanup efforts, should Ecology require assistance. They do not assist with the physical cleanup, but may coordinate resources should local resources be expended or are not available. The Division will assign a State incident number which will be used to track the spill response and cleanup efforts. Further, they will notify all relevant state, county and local agencies about the incident.

Department of Ecology's Emergency Response NW Section

Eastside Fire and Rescue will most likely notify the Department of Ecology's Emergency Response NW Section about a spill/incident. Their interest lies with affected soil or water. Ecology has the role of cleanup oversight and guidance and may have an officer on site. The spiller has the responsibility for cleaning the spill, and Ecology ensures that the spiller/responsible party hires a cleanup contractor if they do not have the ability or resources to do so. Ecology can provide some guidance for hiring a contractor and some preliminary or preparatory information for the contractor. Ecology requires sampling of soil and water to verify cleanup is complete.

If the spiller is not known, Ecology has the only authority to authorize a contractor to proceed with the cleanup activities. If a responsible party can be identified later, the cleanup cost will then be assessed to them. Depending on the nature of the material spilled and the area affected, Ecology may contact the United States Environmental Protection agency.

Washington State Department of Public Health

The Department of Public Health is responsible for assuring adequate water quality and reliability. It also provides technical assistance to owners and operators of public water systems. In the case of spill affecting the WHPA, they would be notified by the responding and coordinating agencies. The Department would coordinate and provide inspections of contaminated water.

Available Equipment and Resources

Cleanup should be handled by trained personnel. Equipment and resources are available from the organizations listed below. Some of these parties are not specifically responsible for dealing with spills within the WHPA, but would be available as material sources.

- **The Eastside Hazardous Materials Team** has equipment and personnel from the Bothell Fire, Redmond Fire, Kirkland Fire, Woodinville Fire Departments, and all other Eastside Fire and Rescue stations. They are available with Level A technicians and equipment (Level A protection is used to protect the occupant from airborne contaminants or those which can be absorbed through the skin). This is the most comprehensive level of protection.
- **The Department of Ecology** has a spill response team capable of responding 24 hours a day to minor spills within their jurisdiction. The response unit consists of a regional supervisor, an administrative assistant, four full-time spill responders, six part-time spill responders, and four plan reviewers. Their equipment includes Level A protective equipment, air supplies, gloves, cleanup pads, booms and socks.
- **Larger firms (Boeing Company, Foss Environmental, and Weyerhauser)** have private response equipment and teams trained to various levels of hazardous materials response.
- **Local Cleanup Contractors** have equipment and personnel trained to perform hazardous materials response.

Resource availability will be coordinated by the Washington State Military Department's Emergency Management Division or the King County Emergency Management Division.

This page intentionally left blank.

Appendix R

Operation and Maintenance Program Details

This page intentionally left blank.

Appendix R
Operations and Maintenance Program Details

R.1 Standard Operating Procedures

There are specific procedures for start-up and shutdown of certain facilities, as well as safety issues and performance evaluations. Based on the type of facility, startup and shutdown cycles could occur more than once per year or only once every several years. The procedures are general for a type of facility will be adapted as necessary for each specific facility.

Supply Source – Wells

Start-Up Procedures for the Wells

1. Check all valves to make sure they are in the correct positions.
2. Check power supply to make sure nothing is locked off or tagged out.
3. Check oil and packing of the pump motor assembly.
4. Pre-lube column of non-submersible pumps for 15 to 20 minutes.
5. Make sure mainline valve is shut.
6. Start and flush well for approximately 20 minutes two to three times or until water is clear.
7. Take bacteriological sample and wait for results. (Minimum of 48 hours.)
8. When satisfactory bacteriological results obtained, set all valves for normal operation.
9. Check any chemical and filter media levels
10. Perform chemical injection startup – chlorine, fluoride, and pH and filter plant startup.
11. Adjust start set points in the telemetry system before placing the well into automatic operation.

Shutdown Procedures for the Wells

1. Shut off mainline valve to the system.
2. Check power to make sure it is off and tag out.
3. Winterize if necessary.
4. Winterize chemical injection system – chlorine, fluoride, and pH and filter plants.

Safety Procedures for Wells

Wells are characterized by loud noises, fast rotating assemblies and electrical hazards. Safety procedures to mitigate these hazards should be followed. PPE should be used for whatever chemicals are used at each well. Confined space procedures will need to be followed for certain areas of specific wells also.

Meter Reading Procedures for Wells

Meters are read and information transferred to a form during regular well visits, at least twice per week.

Performance Evaluation for Wells

The Wells are monitored 24 hours a day using a computer that is integrated with telemetry monitoring equipment. When a parameter exceeds the preprogrammed limits, an alarm is presented at the computer station. This station is monitored during normal work hours by District staff. After hours, the computer is programmed to dial the on-call pager and deliver a text message identifying the type of problem that was detected. The on-call staff person uses the on-call laptop computer, from home or in the field, to access and control the telemetry system in the same manner they would, were they in the office.

Supply Source - Regional Supply Connection

Start-Up Procedures for the Regional Supply Connection

1. Notify Cascade, Bellevue and Issaquah for the South Regional Connection, and Cascade and Redmond for the North Regional Connection.
2. Flush the regional line to the District connection point.
3. Take a bacteriological sample at the connection point and wait for notification of results
4. Test operational functionality of control valve, meters, SCADA of facility prior to turning on to system.
5. Set a specific flow rate per Cascade operational contract.

Shutdown Procedures for the Regional Supply Connection

1. Notify Cascade, Bellevue and Issaquah for the South Regional Connection, and Cascade and Redmond for the North Regional Connection.
2. Isolate the regional line at the District connection point.

Safety Procedures for Regional Supply Connection

Confined space (at both North and South Regional Connection) and fall protection (at South Regional Connection) safety procedures need to be followed.

Meter Reading Procedures for Regional Supply Connection

Meter reading is done at the end of every month (south end) and supply reading to Cascade, Bellevue and Issaquah. Meter reading at the north end is done monthly and used to verify Redmond's meter reading.

Performance Evaluation for Regional Supply Connection

The Regional Connections are monitored 24 hours a day using a computer that is integrated with telemetry monitoring equipment. When a parameter exceeds the preprogrammed limits, an alarm is presented at the computer station. This station is monitored during normal work hours by District staff. After hours, the computer is programmed to dial the on-call pager and deliver a text message identifying the type of problem that was detected. The on-call staff person uses the on-call laptop computer, from home or in the field, to access and control the telemetry system in the same manner they would, were they in the office.

Treatment Facilities

Start-Up Procedures for the Treatment Facilities

NaOH – Sodium Hydroxide for pH Adjustment

1. Fill all lines with water and check for leaks
2. Fill lines with caustic soda
3. Turn on caustic pump, fill day tank and dial in the appropriate feed rates for pH levels
4. Check pH levels (done daily) and adjust feed rate as necessary.

Cl2 – Chlorine Generator

1. Take a meter reading for Cl2 system water meter
2. Check system for general fitness
3. Turn on the water softener
4. Fill Cl2 Generation system with water
5. Fill the brine tank with salt
6. Turn the generation system on (for 0.08 Cl2 solution)
7. Fill the injection system with water
8. Check injection system for leaks
9. Open valves and turn system on to allow injection of Cl2 solution into system.
10. Dial in injection pump feed rate for flow pacing (match feed rate for supply source rate and appropriate Cl2 concentration)
11. Check for appropriate Cl2 residual

F – Fluoride Injection System

1. Take a meter reading for F system water meter
2. Fill saturator ½ full with water
3. Add saturator with Fluoride (1/4 to 1/3 of tank size)
4. Check valve alignments for flow to the injection system, and to the system
5. Fill injection system from saturator
6. Turn on injection pump
7. Check for appropriate Fluoride level

ATEC filters – for Manganese Removal

1. Check media levels in each tank
2. Energize system with water (backflush)
3. Dial in the Cl2 levels for each particular system (0.4 – 0.6 free residual EG)
4. Take sample after the discharge point to check for Mg levels

Ferric Chloride (coagulant to settle Mg removed by the ATEC system)

1. Record setpoints on both pumps and volume of ferric chloride within barrel.

2. Insert flexible suction tube into the barrel of ferric chloride.

3. Close the two ball valves on the drain lines.

4. Close the ball valve on the bottom of the Calibration Column.

5. Open the red handled ball valve near the injection point. The injection point is located at the static mixer, which is on the south wall near the backwash tanks.

6. Open all five ball valves on the pump suction lines (2 on each pump and 1 main suction line ball valve in the lower right-hand corner of the pump skid).

7. Open all six ball valves on the pump discharge lines.

8. Turn the 3-way ball valve located at the upper left-hand corner of the pump skid to the left to direct flow towards the injector.

9. At the Main Control Panel turn the HOA switch (MP-5 and 6) for one pump to HAND and verify flow. Turn switch to OFF and verify operation of the second pump.

10. Turn the HOA switch MP-5 and MP-6 to AUTO.

Shutdown Procedures for the Treatment Facilities NaOH – Sodium Hydroxide for pH Adjustment

1. Turn off caustic pump
2. Drain and flush lines
3. Isolate valves so the caustic cannot leak back into the system.

Cl2 – Chlorine Generator

1. Shut off Generation system
2. Turn off injection pump
3. Isolate system from injection pump

4. Drain off the injection system
5. Empty out the storage tank
6. Take a meter reading for Cl2 system water meter

F – Fluoride Injection System

1. Shut off the injection pump
2. Drain the system
3. Isolate the injection pump from the system
4. Empty saturator tank
5. Take a meter reading for F system water meter

ATEC filters – for Manganese Removal

1. Isolate system

Ferric Chloride (coagulant to settle Mg removed by the ATEC system)

1. At the Main Control Panel turn the HOA switches for pumps MP-5 and MP-6 to OFF.

Safety Procedures for Treatment Facilities

NaOH – Sodium Hydroxide for pH Adjustment

1. Eye protection, gloves and aprons should be worn when handling NaOH.
2. MSDS procedures for exposure or spills should be followed

Cl2 – Chlorine Generator

1. Eye protection, gloves and aprons should be worn when handling Cl2
2. MSDS procedures for exposure or spills should be followed

F – Fluoride Injection System

1. Particulate Face Shield, dust mask, eye protection, gloves and aprons should be worn when handling Sodium Fluoride
2. MSDS procedures for exposure or spills should be followed

ATEC filters – for Manganese Removal

1. Gloves and aprons should be worn when handling the filter media
2. MSDS procedures for exposure or spills should be followed

Ferric Chloride (coagulant to settle Mg removed by the ATEC system)

1. Eye protection, gloves and aprons should be worn when handling Ferric Chloride
2. MSDS procedures for exposure or spills should be followed

Meter Reading Procedures for Treatment Facilities

NaOH – Sodium Hydroxide for pH Adjustment

Hour run meters for the pump are read to track duration of use.

Cl2 – Chlorine Generator

Water meter for Cl2 is read to use in calibration of the Cl2 dosage

F – Fluoride Injection System

Water meter for F is read to use in calibration of the F dosage

ATEC filters – for Manganese Removal

Backwash meters read to track with unbilled water use and recording sewer use.

Ferric Chloride (coagulant to settle Mg removed by the ATEC system)

Ferric Chloride is delivered in 55-gallon barrels. The volume of liquid within the barrel is measured using a sonic level gage.

Performance Evaluation for Treatment Facilities

Certain pieces of the treatment facilities, such as chemical feed equipment, are monitored 24 hours a day using a computer that is integrated with telemetry monitoring equipment. When a parameter exceeds the preprogrammed limits, an alarm is presented at the computer station. This station is monitored during normal work hours by District staff. After hours, the computer is programmed to dial the on-call pager and deliver a text message identifying the type of problem that was detected. The on-call staff person uses the on-call laptop computer, from home or in the field, to access and control the telemetry system in the same manner they would, were they in the office.

Storage Facilities

Start-Up Procedures for the Storage Facilities

1. Verify no debris or materials are in the tank
2. Verify the tank is ready for operation by checking all inlets, outlets, screens and alarm and measuring devices.
3. Spray down interior with disinfectant (heavily chlorinated water) per AWWA standards.

4. Start filling and take bacteriological samples as filled at different levels
5. Verify SCADA operation
6. Open valves and put on-line

Shutdown Procedures for the Storage Facilities

1. Drain tank as much as possible into the water system
2. Where possible, pump remainder into water system
3. Isolate the tank from the water system, including modifying setpoints for operating system as appropriate
4. Drain remainder of tank, dechlorinating the water prior to discharge to any storm water system

Safety Procedures for Storage Facilities

Operation and maintenance of storage tanks can have hazards such as confined space or fall protection depending on the task. Appropriate PPE gear and procedures need to be used, based on activity.

Performance Evaluation for Storage Facilities

The Storage Facility water levels are monitored 24 hours a day using a computer that is integrated with telemetry monitoring equipment. When a parameter exceeds preprogrammed limits, an alarm is presented at the computer station. This telemetry is monitored during normal work hours by District staff. After hours, the computer is programmed to dial the on-call pager and deliver a text message identifying the type of problem that was detected. The on-call staff person uses the on-call laptop computer, from home or in the field, to access and control the telemetry system in the same manner they would, were they in the office.

Water Distribution System

Start-Up Procedures for the Water Distribution System

1. Install pipe and appurtenances with chlorine granules placed during installation. New pipe is kept disconnected from District's active water system during installation and testing.
2. Fill pipe using cross connection controls in place to prevent contamination
3. Pressure test per AWWA procedure
4. Allow 24 hours minimum contact time after filling for disinfection
5. Flush to appropriate discharge point (directly to sewer, or dechlorinate if discharging to environment)
6. Collect samples for bacteriological testing
7. If samples show no bacteria, schedule and connect to existing District active water system using following process:
    a. Swab connection piping and fittings with 200 ppm chlorine solution before

connection

b. Flush final connection to remove air and dechlorinated water in connection
c. For existing customer reconnection, flush and connect new service lines to new water services. Notify customers of outage and reconnect new water services to existing customer service line
d. For new water service installation (e.g., plat), crimp service line, trim to desired length, dechlorinate new setter and fittings, install in designated location, and place meter box. Flow new setter to ensure that setter flows freely

Shutdown Procedures for the Water Distribution System

1. Evaluate shutdown effect on the system
2. Determine isolation valves
3. Notify customers affected by the shutdown (48 hours in advance for planned shutdown)
4. Shutdown meters connected to area
5. Shutdown appropriate isolation valves
6. Verify that the main has been isolated

Safety Procedures for Water Distribution System

The water system should be considered a high-pressure system. Workers also need to be cognizant of the potential for creating problems in the system outside of the immediate area of their work, due to the interconnectivity within the system. Pressure issues and water hammer are examples of problems that can travel long distances through the system. Different safety procedures will be necessary based on the type of task being done on the distribution system. Accessing the distribution system may involve trench safety, fall hazards, and exposure to heavy equipment and traffic. PPE and safety procedures appropriate to the specific task should be followed.

Performance Evaluation for Water Distribution System

The integrated telemetry/computer system collects and stores field information that is periodically provided to the Engineering Department and Planning Engineer. The field results are compared to the predicted results from the District's hydraulic analysis model, H2OMap. During initial calibration of the H2OMap model several flow tests were conducted to monitor fire- flow events at numerous sites throughout the District.

Booster Pump Stations

Start-Up Procedures for the Booster Pump Stations

1. Perform a visual inspection of all mechanical and electrical systems
2. Energize water piping and check for leaks
3. Flush water through and bleed out all air throughout the booster system

4. Set all appropriate valves for booster operation
5. If system has been off for a significant time or is new, flush and take bacteriological sample
6. Check setpoints for operation (make sure pumps are not set to come on immediately)
7. Turn HOA switch to Off
8. Turn power supply On
9. Operate the system manually to determine valves open and close appropriately
10. Set set-points for automatic operation, check SCADA operation
11. Turn HOA switch to Automatic

Shutdown Procedures for the Booster Pump Stations

1. Turn HOA switch to Off
2. If taking the Booster system off-line for a significant period of time, turn power off
3. If taking the Booster system off-line for a short period, turn pump disconnect switch off
4. Isolate system
5. Drain booster pump system to take pressure off of system

Safety Procedures for Booster Pump Stations

Booster Pump Stations are characterized by loud noises, fast rotating assemblies and electrical hazards, and require safety procedures for these hazards be followed. Confined spaces exist at certain booster pump stations, which require additional safety procedures. In addition, use of PPE are required for any chemicals located at a particular booster pump stations, such as at the Section 36 BPS.

Meter Reading Procedures for Booster Pump Stations

Hour run meters are normally read twice per week. SCADA hour run times are checked against manual meter readings on a monthly basis.

Performance Evaluation for Booster Pump Stations

The Booster Pump Stations are monitored 24 hours a day using a computer that is integrated with telemetry monitoring equipment. When a parameter exceeds the preprogrammed limits, an alarm is presented at the computer station. This station is monitored during normal work hours by District staff. After hours, the computer is programmed to dial the on-call pager and deliver a text message identifying the type of problem that was detected. The on-call staff person uses the on-call laptop computer, from home or in the field, to access and control the telemetry system in the same manner they would, were they in the office.

Pressure Reducing Stations

Start-Up Procedures for the Pressure Reducing Stations

1. Determine pressure settings for downstream pressure zone
2. Visually inspect connections within the vault
3. Open downstream valve to introduce downstream pressure to the station
4. Bleed air out of the system
5. Set up Pressure Relief Valve to predetermined system relief pressure
6. Ensure flow in the system below PRV through normal use or hydrant flush
7. Set bypass PRV downstream pressure setting
8. Set primary PRV downstream pressure setting
9. Verify operation of each by varying flows
10. Retest the Pressure Relief Valve with high pressure in system
11. Shut off hydrant
12. Document pressure settings

Shutdown Procedures for the Pressure Reducing Stations

1. Shut the downstream valve first
2. Shut the upstream valve second
3. Shut the pressure relief valve
4. Bleed water out of the system
5. Document that the PRV has been shut down
6. Notify the Fire District is the fire flow in the downstream zone has been adversely impacted

Safety Procedures for Pressure Reducing Stations

Procedures to mitigate for confined space, fall protection, high pressure water awareness, and engulfment should be followed in Pressure Reducing Stations.

Performance Evaluation for Pressure Reducing Stations

Evaluate pressure settings and operation annually

Control Valves

Start-Up Procedures for the Control Valves

If the control valve is electronically operated, start with the power disconnected. Open the incoming mainline valve, then open the appropriate control valves and petcocks. Energize power to the control valve for operation. Check operations by allowing some water to flow through the control valve. Set any associated Pressure Reducing Valves. Once the control valve is set and operational open downstream mainline valve and put into operation.

Shutdown Procedures for the Control Valves

If the valve is electronically operated, the power should be disconnected first. Isolate the control valve by shutting the downstream mainline valve off, and then shutting the incoming mainline valve. Shut off all controls and petcocks.

Safety Procedures for Control Valves

Standard safety precautions are followed for any control valves located in confined space or traffic areas.

Performance Evaluation for Control Valves

The settings and operations of each control valve are checked at least annually to verify proper operation.

Interties

Start-Up Procedures for the Interties

1. Notify affected entity of intention to activate the intertie
2. Verify that all systems are intact and operational
3. Get meter reading
4. Flush system and take sample if necessary.
5. Open the lower pressure side of the intertie first
6. Check any verify settings as appropriate
7. Open the higher pressure side of the intertie second
8. Verify system operation

Shutdown Procedures for the Interties

1. Notify affected entity of intention to close the intertie
2. Close the lower pressure side of the intertie
3. Close the upper pressure side of the intertie
4. Read the meter and provide readings to appropriate parties.
5. Drain intertie

Safety Procedures for Interties

Procedures to mitigate for confined space, fall protection, high pressure water awareness, and engulfment are to be followed in Pressure Reducing Stations.

Meter Reading Procedures for Interties

Meters are read upon startup and shut down and monthly during operation.

Performance Evaluation for Interties

Check operation monthly when in operation. Verify meter calibration as necessary.

R.2 System Operations and Preventative Maintenance Programs

Most water system tasks can be categorized as either operation or preventative maintenance. The District has prepared a detailed estimate of the hours for routine operations and preventative maintenance tasks. The maintenance tasks and corresponding annual staff hours are presented in Table R-1.

Based on the estimated staff hours needed to complete a task, the FTEs required to complete this task is calculated for each task group in the tables. One FTE is equal to 1,788 staff hours (260 available workdays less 15 days' vacation, 10 days sick leave, and 11.5 days of holidays).

As described in Table R-1 the Water Operators work for District routine and preventative maintenance requires 20,572 hours per year, representing 11.51 FTEs. When the contract work for Cascade Water Alliance is included the figures are 20,722 hours per year, representing 11.59 FTEs.

Table R-1
Routine and Preventative Maintenance Staffing Level Evaluation

Operations Function	Task	Activity	Task Frequency	Annual Staff Hours	FTE
Water Administration	*Vehicle Maintenance*	Routine general maintenance and inspections, checking physical condition and fluid levels to ensure vehicle is road worthy and ready for service.	Weekly	280	0.2
	Tool and Equipment Maintenance	Tool and Equipment maintenance	Weekly	300	0.2
	Outside Department Support (DE, CIP, ENG, CS)	Water operations support of DE's, CIP's special engineering projects and customer service requests.	Support as needed by other departments	800	0.5

Table R-1 (cont.)

Routine and Preventative Maintenance Staffing Level Evaluation

Operations Function	Task	Activity	Task Frequency	Annual Staff Hours	FTE
Water Administration (cont.)	*Field Admin (Meetings, School, Training)*	Operational training and administrative support for reliability centered maintenance (RCM) project	Training schedule varies by employee. RCM project work is weekly.	4,455	2.5
Total	Water Administration			5,835	3.3
Wells and Production	*Pump Run*	Routine inspections for maintenance, site security and data collection to verify well pumps, motors and associated production equipment is operating correctly and that buildings and sites are secure	2 times weekly	500	0.3
	Well Equipment Maintenance	Maintenance and inspections for equipment at a well facility: Control Valves, Dehumidifiers, Heaters, discharge vaults and pumps etc.	Monthly, Annually	193	0.1
	Pump and Motor Maintenance	Oil changes and bearing lubrication of well motors.	Annually	250	0.1

Table R-1 (cont.)
Routine and Preventative Maintenance Staffing Level Evaluation

Operations Function	Task	Activity	Task Frequency	Annual Staff Hours	FTE
Wells and Production (cont.)	*Generator Maintenance*	Routine general maintenance and inspections, checking physical condition and fluid levels to ensure generator is ready for service in an emergency.	Weekly	80	0
	Well Monitoring	Routine inspection and logging of production and monitoring well levels.	Monthly	250	0.1
	Facility Maintenance	Maintenance of building structure	Annually	100	0.1
Total	Wells and Production			1,373	0.8
Water Treatment	*Water Samples*	Routine collection of system and source water samples for compliance with federal and state drinking water regulations.	Weekly	850	0.5
	Daily Treatment Testing Wells and Boosters	Routine inspections, maintenance and data collection at water treatment facilities to monitor and verify chemical pumps, skids and associated treatment and process monitoring equipment is operating correctly.	2 times weekly	616	0.3
	Treatment Equipment Maintenance Wells and Boosters	Inspection, maintenance and calibration of treatment pumps, piping and water quality analyzers and testing equipment	Monthly, quarterly and annually	1,280	0.7
Total	Water Treatment			2,746	1.5

Table R-1 (cont.)
Routine and Preventative Maintenance Staffing Level Evaluation

Operations Function	Task	Activity	Task Frequency	Annual Staff Hours	FTE
Water Storage	*Reservoir Inspections and Maintenance*	Visual inspections of water storage tanks and reservoirs and related components for security, safety and maintenance purposes. Pressure washing is done for tank maintenance	Tank inspections every 6 months. Maintenance approx. every 3 years.	458	0.3
	Reservoir Draining & Cleaning	Drain, inspect & place storage tank back online. Includes operations required to take the tank off-line.	Each tank approximately every 10 years (80 hrs/tank)	192	0.1
Total	Water Storage			650	0.4
Booster Stations	*Pump Run*	Routine inspections for maintenance, site security and data collection to verify booster station pumps, motors and associated production equipment is operating correctly and that buildings and sites are secure	2 times weekly	400	0.2
	Booster Equipment Maintenance	Maintenance and inspections for equipment at a booster station: Control valves, Dehumidifiers, Heaters, discharge vaults and pumps etc.	Monthly, Annually	100	0.1
	Pump and Motor Maintenance	Oil changes and bearing lubrication of booster pump motors.	Annually	166	0.1

Table R-1 (cont.)
Routine and Preventative Maintenance Staffing Level Evaluation

Operations Function	Task	Activity	Task Frequency	Annual Staff Hours	FTE
Booster Stations (cont.)	*Generator Maintenance*	Routine general maintenance and inspections, checking physical condition and fluid levels to ensure generator is ready for service in an emergency.	Weekly	10	0
	Facility Maintenance	Maintenance of building structure	Annually	10	0
Total	Booster Stations			686	0.4
Water Mains and Appurtenances	*Valve Survey*	Locating, operating and exercising valves to confirm that all valves in the distribution system are accessible and function properly.	25% annually (every valve every 4 years)	1,200	0.7
	Hydrant Survey	Visual inspection and operation of fire hydrants to verify proper function, visibility, and accessibility for maintenance and emergency use. Maintenance specific information like manufacturer and distance to the foot valve are verified, while inspection date and static pressure are recorded.	25% annually (every hydrant every 4 years)	1,200	0.7

Table R-1 (cont.)
Routine and Preventative Maintenance Staffing Level Evaluation

Operations Function	Task	Activity	Task Frequency	Annual Staff Hours	FTE
Water Mains and Appurtenances (cont.)	*Blow off Survey*	The inspection and operation of blow off valves is incorporated into the District's water main flushing program. Inspections consist of locating and confirming blow off assemblies are accessible, and then operated/ flushed to verify proper function	25% annually (every blow off every 4 years)	300	0.2
	Air Vac Survey	Locating and confirming air and vacuum release assemblies are accessible and function properly. Maintenance related information like manufacturer and size are verified, and operational status and inspection dates are recorded and stored in the CMMS database.	25% annually (every valve every 4 years)	400	0.2
	Leak Detection	Systematic monitoring and recording of water mains and appurtenances to detect leaks.	As needed or per customer request.	250	0.1
	Water Main Flushing	Regular flushing and cleaning of water mains improves chlorine residuals and water aesthetics (appearance, taste and odor) in low flow or dead end areas of the District.	13,000 ft. quarterly, and additional mains upon customer request.	260	0.2

Table R-1 (cont.)
Routine and Preventative Maintenance Staffing Level Evaluation

Operations Function	Task	Activity	Task Frequency	Annual Staff Hours	FTE
Water Mains and Appurtenances (cont.)	*PRV Maintenance*	Maintenance inspections consist of cycling/ operating pressure reducing valves via pilot systems, checking and recording pressure settings and ensuring proper valve function. Pressure relief valves are tested and reset. Scheduled rebuilds of pilot systems and valves.	Inspections performed annually. Pilot systems rebuilt every 3 years or as needed. Full valve disassembly and rebuilds every 6 years.	1,000	0.6
	Water Mains	Reactive Work Category: Repair of water mains - Hit by contractor or pipe failure	Anticipate avg of 2 per year	400	0.2
	Water Services	Reactive Work Category: Installation of new services or repairs to existing lines	Anticipate avg of 10 new installs or service line leak repairs	1,000	0.6
	Locates	Marking underground water and sewer utilities for excavation per RCW 19.122.030	2450 locates annually	1,880	1.1
	Easements	Assisting Building Maintenance and Grounds crew with water easement maintenance	2 easements annually	20	0
Total	Water Mains and Appurtenances			7,910	4.4

Table R-1 (cont.)
Routine and Preventative Maintenance Staffing Level Evaluation

Operations Function	Task	Activity	Task Frequency	Annual Staff Hours	FTE
Water Meters	*Meter Maintenance*	Automated Metering Infrastructure (AMI) support and large meter testing	AMI Project support as needed Meter testing as needed, and routine interval TBD because of new AMI system	1,372	0.8
Total	Water Meters			1,372	0.8
Regional System Maintenance – Under Contract to CWA					
Cascade Water Alliance (CWA)	*Maintenance and Operations of Bellevue Issaquah Pipeline (BIP) for CWA*	Maintaining pipeline and appurtenances – Locates, special projects.	Monthly	150	0.1
Total	Regional System Maintenance			150	0.1

R.3 Preventative Maintenance Program – Extraordinary Operating Conditions

Most preventative maintenance activities take place with minimal system interruption. In addition, the system has been developed to have redundancy, so that the temporary loss of a facility does not disrupt service provision. However, there are some tasks that require major equipment be taken offline during which time the system operations may need to be modified. These are noted in the table, as extraordinary operations, and a more detailed explanation of operational considerations is provided in Table R-2.

Table R-2
Preventative Maintenance - Extraordinary Operating Conditions

Facility	Impact on Operations
Storage Tanks	
3-MG Tank	The 3-MG Tank is the only tank in the 700 Pressure Zone. The Well 4 boosters can supply domestic and fire flows to the north end of the Plateau Zone without the tank being online, thus avoiding an interruption of service, but would need to operate on a continuous basis. Alternatively, NESSWD may be able to provide water as well.
297 Tank	The 297 Tank is the only tank in the 297 Zone and providing storage for the 297 Zone. When the 297 Tank is offline the valley wells, Wells 7, 8 and 9, or the Regional Line provide the source of water for the 297 Zone. Several PRVs can also provide a source of water to the 297 Zone from the higher-pressure zones, although they would be operating at a higher flow rate than normal. The 297 Tank also serves as a source of water for the 297 and SE 43rd Booster Stations pumping from the 297 Zone to the 650 Zone. This is especially true for the 297 Booster Pump Station, located immediately adjacent to the tank. Again, the valley wells and Regional Line can provide the source for the booster pump stations, and the 43rd Booster Pump Station is not likely to be directly affected by work at the 297 Tank site.
Booster Pump Stations	
Well 4 Booster Pump	The Well 4 Booster Pump Station provides water to the 700 Pressure Zone by boosting water following treatment at the Well 4 Treatment Facility. If the Well 4 Booster Pump Station is completely off-line (all pumps non-operational) the District may arrange with NESSWD to provide water to the 700 Pressure Zone.
Pressure Reducing Stations	
14 Sole Source Pressure Reducing Stations	Fourteen (14) of the District pressure reducing stations supply pressure zones that have only one PRV providing supply, with no redundancy. When these PRVs are rebuilt or require major maintenance the District keeps operational either the primary or bypass PRV valve during maintenance of the other valve in the station. The Fire District may be notified during major maintenance of the larger valve as fire flow could be compromised.

R.4 Chemicals, Equipment, Supplies, and Maintenance Contractors

Table R-3 provides a list of vendors the District currently uses for chemical, equipment, and part supplies and maintenance contractors.

Table R-3
Chemicals, Equipment, Supplies, and Maintenance Contractors

	Supplier	Contacts	Notes
Chemicals			
Sodium Hydroxide (Caustic) Partial Loads	Univar (Kent)	(253) 872-5000 Fax (253) 872-5041 Jennifer Perras (253) 872-5040 Cell (206) 249-6109	Wells 1, 2, and 10 Order Per Gallon (Wet)
Sodium Hydroxide (Caustic) Full Loads	JCI Jones Chemicals (Tacoma)	Michelle Trammell (253) 274-0104	Well 9 Order Per Gallon (Wet)
Sodium Fluoride	Cascade Columbia Distribution (Seattle)	(800) 683-9724 (206) 282-6334 Fax (206) 282-6330 Kevin Rock (206) 255-7299	Wells 1, 2, 4, 9, 10, 13, Section 36 Order Per Bag / 50 Pound Bags / 40 Bags Per Pallet
Sodium Chloride	Cascade Columbia Distribution (Seattle)	(800) 683-9724 (206) 282-6334 Fax (206) 282-6330 Kevin Rock (206) 255-7299	Well 4 Treatment Facility Per Drum, Order Size 20 Tons
Sodium Chloride	Cascade Columbia Distribution (Seattle)	(800) 683-9724 (206) 282-6334 Fax (206) 282-6330 Kevin Rock (206) 255-7299	Wells 1, 2, 9, 10, 12, 13, Section 36 Order Per Bag/50 Pound Bags / 49 Bags Per Pallet

Table R-3 (cont.)
Chemicals, Equipment, Supplies, and Maintenance Contractors

	Supplier	Contacts	Notes
Ferric Chloride	Cascade Columbia Distribution (Seattle)	(800) 683-9724 (206) 282-6334 Fax (206) 282-6330 Kevin Rock (206) 255-7299	Well 4 Treatment Facility Order in groups of (4) 55 gallon drums
Filter Media	ATEC (Longview)	(360) 414-9223 Fax (360) 397-0375 Bill Ketchum (360) 693-6202 Cell (360) 901-2273	Need specific volume and media size when ordering
Equipment/Power			
Chlorine Pumps	TMG Services (Tacoma)	(800) 562-2310	
	Pumptech, (Bellevue)	(425) 644-8501	Grundfos Pumps
Caustic Pumps (Injection Pump)	Milton Roy (Warminster, PA)	(215) 441-0800	
	Pumptech (Bellevue)	(425) 644-8501	Grundfos Pumps
Fluoride Pumps	Pumptech (Bellevue)	(425) 644-8501	Grundfos Pumps
Control Valves	GC Systems (Sumner)	(800) 525-9425	
Well Pumps	Cascade Machinery	(800) 289-0500 (206) 762-0500	U.S. Motors, GE Motors
		(206) 762-0500	
Well Pumps	Utilities Service Co., Inc.	(206) 246-5674 Ed Mola Cell (206) 730-6193	
Well Service	Pump Tech (Bellevue)	(425) 644-8501	

Table R-3 (cont.)

Chemicals, Equipment, Supplies, and Maintenance Contractors

	Supplier	Contacts	Notes
Electric Power	Tanner Electric (North Bend)	(425) 888-0623	Puget Sound Energy supplies power to most facilities; Tanner Electric supplies power to Well 12 and to the Well 12 Booster Station
Electric Power	Puget Sound Energy (Bellevue)	(800) 321-4123	
Diesel Fuel (All brands)	Associated Petroleum Products (Tacoma)	(800) 929-5243 Becky Lantz (253) 207-4267	
Supplies/Parts			
Miscellaneous Parts	Ferguson Enterprises (Woodinville)	(425) 486-9600 Tom Roselli (253) 538-8275 Cell (253) 283-5483	
Miscellaneous Parts	H.D. Fowler Company (Bellevue)	(425) 746-8400 Ryan Huff Cell (206) 255-4314	
Miscellaneous Parts	HD Supply Waterworks (Seattle)	(206) 722-4800 Mark Thommasen Cell (206) 255-8519	
Miscellaneous Parts	H. B. Jaeger Co. LLC (Snohomish)	(877) 707-5958 Brodie Van Noy Cell (425) 754-5400	
Miscellaneous Parts	Pollard Water (Redmond)	(800) 437-1146	
Miscellaneous Parts	Consolidated Supply Co. (Seattle)	(206) 784-0047 Charlie Sandoval Cell (425) 922-4581	DFW Meter Box Items

Table R-3 (cont.)
Chemicals, Equipment, Supplies, and Maintenance Contractors

	Supplier	Contacts	Notes
Meters	Ferguson Enterprises (Woodinville)	(425) 486-9600	3” and 4” Omni Meters
Meters	Consolidated Supply Co. (Seattle)	(206) 784-0047 Charlie Sandoval Cell (425) 922-4581	Mueller Meters for AMI
Electrical Supplies	North Coast Electric (Bellevue)	(425) 641-3400	
Electrical Supplies	Stusser Electric (Bellevue)	(425) 454-3339	
Batteries	Interstate Batteries of Seattle (Seattle)	(800) 562-3212	
Maintenance Contractors			
Generator Maintenance	Cummins Northwest, Inc. (Renton)	(425) 235-3400	
SCADA Maintenance	Performance Information Technologies	(425) 440-0626	Wonderware
Telemetry Maintenance	S&B Inc. (Bellevue)	(425) 644-1700	
PLCs for Telemetry	S&B Inc. (Bellevue)	(425) 644-1700	
Groundwater Protection	CDM (Bellevue)	(425) 453-8383	
Water Testing	Water Management Labs (Tacoma)	(253) 531-3121	Certified Testing Laboratory
Water Testing	AmTest (Redmond)	(425) 885-1664	Certified Testing Laboratory

Table R-3 (cont.)
Chemicals, Equipment, Supplies, and Maintenance Contractors

	Supplier	Contacts	Notes
Water Testing	Seattle Public Utilities	Wylie Harper, P.E. Drinking Water Quality Director (206) 684-7880	Certified Testing Laboratory
Communication (Mobile Radios and Base Radios and DSL)	Westhill Electronics (Bothell)	Russ Wentz (425) 486-0777 Cell (206) 605-3444	
	Accu Comm, Inc. (Mukilteo)	(800) 404-9344	
	Qwest (Seattle)	(888) 777-9569	

R.5 Area Agencies and Institutions of Note

Table R-4 provides a list of local agencies and institutions relevant to the District's purpose, and their contact information.

Table R-4
Area Agency/Institution Contact List

The Alarm Center	1 (800) 252-8338
Office/Shop Well 10 Well 1 Inglewood Lift Station	Acct# -1756335 Acct# 515-5091 Acct# 515-5092 Acct# 523-1960
Emergency	**911**
911 Center, non-emergency NORCOM (Fire Dispatch), non-emergency	206-296-3311 425-557-5700

Table R-4 (cont.)
Area Agency/Institution Contact List

Police Departments	
Issaquah Police Department	425-837-3200
King County Sheriff	206-296-3311
Redmond Police Department - records	425-556-2500
Redmond Dispatch 24 hour	425-885-1333
Sammamish Police Department - Main Admin	425-295-0770
Sammamish Police (24 hour non- emergency dispatch)	206-296-3311
Washington State Patrol – Bellevue District	425-401-7788
Fire Districts	
Eastside Fire & Rescue	425-313-3200
EF&R Battalion Chief Duty Officer – 24 hour Cell	425-765-1676
EF&R Battalion Chief Fax	425-557-7640
EF&R Fire Station 81 – Pine Lake	425-313-3381
EF&R Fire Station 82 –Sahalee	425-313-3382
EF&R Fire Station 83 – Klahanie	425-313-3383
King County Fire District #27 - Fall City	425-222-5841
KCFD #27 On-Call Duty Officer Cell	425-941-8975
King County Fire District #34 - Redmond	425-556-2226
KCFD #34 Fire Station Battalion Chief	425-556-2234
Federal	
EPA – Region 10 Seattle Office	1-800-424-4372
Federal Emergency Management Agency (FEMA) Region 10 Office	425-487-4600
FEMA general phone line	1 (800) 621-3362
Washington State	
Department of Ecology 24 hour	425-649-7000
Department of Transportation	206-440-4697
Department of Transportation – Emergency	206-440-4490
Department of Fish & Wildlife (Nuisance Wildlife)	425-775-1311
OSHA	1 (800) 321-6742
WA State Dept of Labor & Industries	1 (800) 423-7233
Department of Health 24-Hour Drinking Water Emergencies	1 (877) 481-4901

Table R-4 (cont.)
Area Agency/Institution Contact List

King County	
Department of Emergency Management	
Office (ECC when activated)	206-296-3830
Animal Control – Regional Animal Services of King Co.	206-296-7387
King County Wastewater Treatment Division (Sewer)	
24 hour Emergency/Overflows	206-263-3801
South Treatment Plant, Renton – 24 hour Emergency/Overflows	206-263-1760
Public Health – Seattle/King County	
Emergency/24 hour number	206-296-4774
Roads	
24-Hour Road Helpline	206-477-8100
King County Roads Dispatch	206-296-8100
Water and Land Resources Division	
General Information	206-477-4800
Josh Baldi - Division Director -	206-477-9440
Hazardous Waste Pick-up Information	
Office	206-477-4466
Department of Assessments	
Office	206-296-7300
Local Water and Sewer Assessments Office	206-296-3913
Ana Schoenecker, Customer Service	206-296-4606
Ana.schoenecker@kingcounty.gov Duty Officer 24 Hr	
Cities/Special Districts	
City of Bellevue	
Main	425-452-6800
Utilities O& M and 24-hr Emergency Response	425-452-7840
Joe Harbour, Operations Manager	425-452-2014
Andrew Lee, Deputy Operations Director	425-452-7675
City of Issaquah – Public Works	
Office	425-837-3400
Emergency: Police Dispatch (will contact water/sewer utilities)	425-837-3200
City of Redmond – Public Works	
Office	425-556-2800
Emergency: Police Dispatch (will contact water/sewer utilities)	425-556-2500

Table R-4 (cont.)
Area Agency/Institution Contact List

City of Sammamish Public Works	
Main Office	425-295-0500
MOC Administrative Assistant: Colleen Rupke	425-952-2115
Public Works 24-hour response: emergency dispatch	425-295-0700
Emergency Manager: Andrew Stevens	425-295-0549
Public Works Internal Service Manager: Martin Bohanan	425-952-2116
Street/Stormwater Maintenance Supervisor: Dan Johnson	425-592-2118
Parks Maintenance Supervisor: Mike Keller	425-592-2122
Northeast Sammamish Sewer & Water District	
Office	425-868-1144
Emergency/Laura Keough, Gen Manager	
Ames Lake Water District	
Office	425-222-7003
Emergency: Jeremy Reier, Water Operator	425-864-3663
Emergency: Bob Pancoast, General Manager	206-819-4215
Overdale Water Association	
Dale Timmons, Board of Trustees, dmtimmons@aritechnologies.com	H: 425-391-0437 C: 206-900-1613
Union Hill Water Association	
Office/24 hr.	425-497-1812
Field Supervisor – Don Erickson	425-466-4289
Cedar River Water	
Office – 24 Hr	425-255-6370
Washington Water Service Company	
Operations Field Office/Issaquah	877-408-4060
Dawnbreaker	
Water Association President - Brian Ott	425-788-6105
Water Operator: Kevin Odegard, NW Water Systems	360-876-0958

Appendix S

Water Shortage Response Plan

This page intentionally left blank.

SAMMAMISH PLATEAU WATER & SEWER DISTRICT
KING COUNTY, WASHINGTON

RESOLUTION NO. 4663

RESOLUTION OF THE BOARD OF COMMISSIONERS OF SAMMAMISH PLATEAU WATER AND SEWER DISTRICT, KING COUNTY, WASHINGTON, ADOPTING AND UPDATING A WATER SHORTAGE RESPONSE PLAN.

WHEREAS, the Sammamish Plateau Water and Sewer District ("District") is a municipal corporation providing water and sewer utility services pursuant to RCW Chapter 57; and

WHEREAS, the District has a responsibility to supply and maintain water service to provide for public health and safety; and

WHEREAS, situations may occur where the District encounters a water supply shortage due to emergency, drought or operational situations; and

WHEREAS, a water shortage response plan provides systematic responses and methods to reduce customer demands to respond to a water supply shortage, and to allow the District to maintain essential public health and safety, and minimize adverse impacts to residents and businesses; and

WHEREAS, RCW 57.08.005(3) provides the District full authority to regulate and control the use, content, distribution, and price of water supplied in such a manner as is not in conflict with general law; and

WHEREAS, RCW 57.08.170 authorizes the District to adopt a water shortage response plan and emergency water use restrictions and to enforce such a plan and emergency water use restrictions by, among other things, imposing a fine as provided by resolution for failure to comply with any such Plan or restrictions; and to enforce the collection of such fines as provided in such RCW; and

WHEREAS, by Resolution No. 2725 on February 5, 2001 the District previously adopted a Water Shortage Response Plan ("2001 WSRP"); and

WHEREAS, the District has completed an update of the 2001 WSRP; and

WHEREAS, the District Board of Commissioners have reviewed and considered the proposed update to the 2001 WSRP, a copy of which is attached hereto and incorporated herein by this reference ("2017 Water Shortage Response Plan") which was prepared by District staff; now, therefore,

BE IT RESOLVED, by the Board of Commissioners of Sammamish Plateau Water & Sewer District, King County, Washington, as follows:

1. The 2017 Water Shortage Response Plan is hereby approved and adopted and shall be effective the date set forth below.

2. All District resolutions, policies and procedures, including Resolution No. 2725 and the 2001 WSRP, are hereby amended, rescinded and superseded to be in accordance with the foregoing.

ADOPTED by the Board of Commissioners of Sammamish Plateau Water and Sewer District, King County, Washington, at a regular open public meeting held on the 3rd day of April 2017.

Individual Commissioner's Vote on this Resolution:

Approved:	✓	Karen Moran, President and Commissioner
Opposed:		
Abstained:		
Absent:		
Approved:		Mahbubul Islam, Vice President and Commissioner
Opposed:		
Abstained:		
Absent:		
Approved:	✓	Mary Shustov, Secretary and Commissioner
Opposed:		
Abstained:		
Absent:		
Approved:	✓	Tom Harman, Commissioner
Opposed:		
Abstained:		
Absent:		
Approved:	✓	Lloyd Warren, Commissioner
Opposed:		
Abstained:		
Absent:		

Sammamish Plateau Water

WATER SHORTAGE RESPONSE PLAN FOR DEMAND REDUCTION DURING EMERGENCY, OPERATIONAL, AND DROUGHT SITUATIONS

REVISED APRIL 2017

ADOPTED BY SAMMAMISH PLATEAU WATER AND SEWER DISTRICT
RESOLUTION NO. 4663

This page intentionally left blank.

Revisions and Additions
Revisions to the Water Shortage Response Plan shall be made as follows:

Major revisions include major changes to the core essence of the document policies or procedures. All major revisions must be approved by resolution of the Board of Commissioners.

Minor revisions include minor features that require revision or modification. Minor revisions do not alter the substance or intended outcome of the program element. They may include typographical or grammatical errors. This type of revision does not require approval by resolution from the Board of Commissioners.

This page intentionally left blank

Contents

PLAN OBJECTIVES 7
PLAN DEVELOPMENT 7
PLAN DESCRIPTION 8
PLAN IMPLEMENTATION CONSIDERATIONS 9
PLAN IMPLEMENTATION FACTORS 9
Water Supply Factors 9
Water Demand Factors 10
Other Factors 10
WATER SUPPLY SHORTAGE DESCRIPTIONS 10
Emergencies 10
Droughts 11
Operational Situations 11
WSRP Water Use Curtailment versus Conservation 12
WATER SHORTAGE RESPONSE PLAN STAGES 13
STAGE ONE: ADVISORY STAGE 13
Objectives 13
Triggers 13
Public Message 13
Internal Operating Actions 13
Communication Actions 14
STAGE TWO: VOLUNTARY STAGE 16
Objectives 16
Triggers 16
Public Message 16
Internal Operating Actions 16
Communication Actions 17
CUSTOMER WATER USE REDUCTION ACTIONS 18
Examples of Residential Indoor Actions 18
Residential Outdoors 18
Commercial and Residential Landscape 19
Commercial 19
STAGE THREE: MANDATORY STAGE 22
Objectives 22
Triggers 22
Public Message 22

Internal Operating Actions 22
Communication Actions 23
MANDATORY CUSTOMER WATER USE RESTRICTIONS MENU 24
Exemptions 24
MANDATORY RESTRICTIONS ENFORCEMENT CHECKLIST 25
STAGE FOUR: RATIONING STAGE 27
Objectives 27
Triggers 27
Public Message 27
Internal Operating Actions 27
Communication Actions 28
RATIONING CUSTOMER WATER USE CURTAILMENT MENU 29
Exemptions 29
MONITORING AND EVALUATION 30

SAMMAMISH PLATEAU WATER AND SEWER DISTRICT

WATER SHORTAGE RESPONSE PLAN
FOR DEMAND REDUCTION DURING EMERGENCY, OPERATIONAL, AND DROUGHT SITUATIONS

PLAN OBJECTIVES

The Water Shortage Response Plan (WSRP) provides systematic responses and methods to reduce customer water demand due to a water supply shortage from an emergency, drought event, or operational situation.

The objective of the WSRP is to establish actions and procedures for evaluating supply options and managing water demand during a water supply shortage. Staff will use this plan during infrequent and unusual events, and it is not a substitute for the development of water supply projects and conservation programs. The WSRP establishes strategies in advance of actual conditions. The District is prepared to maintain essential public health and safety, and minimize adverse impacts to residents and businesses should a water shortage event occur.

PLAN DEVELOPMENT

The District adopted a Water Shortage Response Plan in February 2001 in response to an anticipated drought that occurred later that year. Development of this WSRP drew from information contained in other area water shortage contingency plans. Staff also utilized information from the Washington Department of Health's "Guidelines for the Preparation of Water Shortage Response Plans."

In 2001, the District also created a Water Conservation Task Force. This group of essential staff and managers activates as necessary to examine water supply and demand issues, develop criteria for implementation of the WSRP, develop water use reduction goals, and apply water use reduction methods.

When the District identifies that a water shortage situation is imminent, the Board of Commissioners will direct the Task Force to implement the WSRP. Plan activations have occurred as follows:

- 2001 – District wide, elevated to Stage 3, Mandatory Restrictions
- 2003 – Cascade View Zone only, elevated to Stage 2, Voluntary Conservation
- 2004 – Cascade View Zone only, elevated to Stage 3, Mandatory Restrictions
- 2005 – District wide, elevated to Stage 1, Advisory Stage
- 2015 – District wide, elevated to Stage 2, Voluntary Conservation in conjunction with Cascade Water Alliance.

The District has its own unique supply served by groundwater from 12 wells. The system is different from the regional system but is highly redundant. In some instances, water shortages affecting regional supplies may not affect the District's groundwater supply resources. The District receives between 10% - 20% of its water through the regional surface water supply managed by the Cascade Water Alliance.

Cascade has a Shortage Management Plan (SMP) that it activates on behalf of its members when regional water supplies reach trigger points indicating a potential or actual water shortage. Cascade describes member obligations in Section 3.4 of its plan:

3.4 Applicability to Cascade Members
Consistent with the Section 7.3 of the Joint Agreement, activation of the SMP applies to Cascade Members as follows:

- **Members receiving all of their water supply from Cascade:** Required to comply with Cascade's SMP.
- **Members receiving partial supply from Cascade:** Required to comply in portions of their service areas that receive regional supply; *or* to discontinue use of Cascade supply during the water shortage.
- **Members not receiving Cascade supply.** Not required to comply with Cascade's SMP.
- **Members with interruptible supply**. *None at this time.*

The District's WSRP was revised in April 2017 to reflect changes in the District's water supply situation, including the addition of water shortage plan information from the Cascade Water Alliance. Cascade manages a contract with Seattle Public Utilities on behalf of its members to use water from the regional supply system. Cascade will eventually utilize Lake Tapps for water supply for its members.

PLAN DESCRIPTION

The WSRP provides approaches that can be tailored to specific water shortages. The responses become more assertive as conditions become progressively more serious. These responses are presented in four stages, Advisory, Voluntary, Mandatory and Rationing.

- **Advisory Stage:** In the first stage, customers are informed as early as meaningful data is available that water supply and demand conditions may result in a less than normal supply of water.
- **Voluntary Stage:** If the supply and demand situation at the Advisory stage then deteriorates, the next step in the WSRP is the Stage Two, the "Voluntary" stage, which relies on the voluntary cooperation and support of customers to meet water use reduction goals. Water users are given the opportunity to contribute their "share" of water savings to achieve a District-wide goal of reduced consumption.
- **Mandatory Stage:** If the Voluntary measures have not or are not able to provide the necessary reduction in water use, the WSRP moves to Stage Three, the "Mandatory" stage. The District provides a mandatory water use reduction goal and may utilize techniques such as written warnings and ticketing to reach the required goal.
- **Rationing Stage:** Stage Four, the "Rationing" stage is used when extraordinary levels of reduction are required to ensure demand does not exceed supply and that public health and safely are not compromised.

A menu of water use reduction measures have been developed for each WSRP Stage. Actions to respond to the specific water shortage situation can be tailored through choices within the menus. More severe stages build on previous stages. Objectives and actions from less severe stages should all be considered for implementation with a more severe stage. During a water shortage situation, the Task Force will provide a recommendation for specific implementation of the WSRP to the General Manager and Board of Commissioners.

PLAN IMPLEMENTATION CONSIDERATIONS

There are issues associated with implementing the WSRP that are relevant to all four Stages. These matters should be considered prior to implementation of the WSRP and when changing WSRP Stages:

- Each water shortage situation will be unique. The WSRP cannot anticipate every possible scenario and predict all supply and demand management actions that may be necessary. The WSRP establishes a range of supply and demand management actions in advance of the situation and defines the mechanisms by which District staff can choose strategies and tactics and make decisions during the event.

- Communication is the key to providing customers with the information necessary to implement and achieve water use reductions during a water shortage situation. The District prioritizes providing a clear and consistent message throughout each situation requiring implementation of the WSRP. Contact through social media, signage and direct mail should be considered in addition to radio, TV and print media.

- The media can play an important role during such an event by communicating the nature and significance of such an event and subsequent actions to manage the situation. During water shortage emergency events, the District General Manager or Public Information Officer (PIO) will distribute information to the media, with trained backup personnel to assist as necessary. The General Manager or Incident Commander must approve all media releases prior to distribution. The scope and severity of an event may also affect the role the media is willing to take in broadcasting information.

- Customers have stated that they want an opportunity to meet water use reduction goals through voluntary compliance measures. The decision to enact mandatory restrictions is less controversial if it is evident to the public that a voluntary approach has not sufficiently reduced the demand.

- During each WSRP Stage, customers are asked to curtail certain water uses in order to reduce demand. This may result in hardships for some customers. Cooperation with the curtailment actions is more likely if the public perceives the actions to be fairly distributed.

PLAN IMPLEMENTATION FACTORS

When District staff identify a water shortage situation, the Task Force will convene to consider initiating the WSRP, and at what stage implementation should start. A variety of factors would form the basis of these decisions, including the following:

Water Supply Factors

- Groundwater rights status for that particular year.
- Available groundwater supply and operational condition of District wells.
- Current aquifer levels.
- The rate of decline in aquifer levels, compared with the normal operating levels.
- Surface water situations in proximity to District wells.
- Available surface water supply in the regional water system.

- Cascade Water Alliance has entered into its own water shortage plan (SMP). If Seattle Public Utilities enters its water shortage plan, Cascade Water Alliance generally follows suit and requires its members to initiate their plans as well.
- Water supply situation of adjacent purveyors and the availability of water through emergency interties if necessary.
- Amount of time required to implement a supply enhancement measure.
- Weather conditions as derived from short and long-term weather forecasts and modeling by the National Weather Service and the U.S. Drought Monitor.

Water Demand Factors

- Trends and seasonal forecasts for the system's daily water demands.
- The estimated margin of safety provided by the demand reduction compared with the level of risk assumed if no action is taken.
- Amount of time required to implement a water use reduction measure.
- Media availability.
- Ease of customer understanding of water use reduction measure.
- Customer response.
- Magnitude of expected savings provided by a water use reduction measure.

Other Factors

- The value of lost water sales revenue compared with the increased margin of reliability.
- Consultation with the District's Board of Commissioners and elected officials and staff of other local and regional government entities.
- The length of time a WSRP stage would be in place. (This determination should avoid implementation followed quickly by termination, and then potential re-implementation of the WSRP. This is to avoid confusion and may enhance the customer's confidence in the Board's decision.)
- Required time lags to shift administrative gears and institute measures.
- Ultimate cost to the District customers, both residential and commercial.
- Equity in demand reduction between customer classes.
- Current events.

WATER SUPPLY SHORTAGE DESCRIPTIONS

Emergencies

Water shortage emergencies could potentially occur when there is damage to major infrastructure that in turn affects water supply, storage or distribution to customers' homes and businesses. Response to this type of emergency includes reestablishing water for basic domestic uses as well as for fire protection. The District initiates its *Emergency Response Plan* during any water supply shortage emergency. The Emergency Response Plan directs staff to initiate the Incident Command System and includes procedures to follow during an emergency incident to reestablish normal systems operation.

Emergencies are characterized by urgency and may initially require quick and immediate responses. Staff may have a lack of preparation time to implement meaningful water use reduction strategies during the initial response. Once District staff assesses the length of time necessary to restore normal service, the response strategy may change. Emergencies may require major curtailment actions by customers in a short time period. Emergencies may be also be localized, requiring water use reductions in a small geographic area. Flexibility is the key to designing any emergency strategy.

Droughts
Droughts are naturally occurring but unpredictable weather events of varying frequency, duration and severity. Available regional data indicate that a low probability of a multiple year drought exists in our region. This data includes weather records collected for the past century, tree ring analysis, and soil sampling.

The District is primarily served by a groundwater system. The District's distribution system is divided into two hydraulically distinct zones: the Plateau Zone, located south of the Redmond/Fall City Road, and the Cascade View Zone, located north of the Redmond/Fall City Road. The Plateau Zone is supplied by ten wells. The Cascade View Zone is supplied by two wells. For management of water system operations, the District assumes normal annual recharge of the aquifers tapped by District wells. Because the District wells tap multiple aquifers at varying depths, it is unlikely that all District wells will be equally affected by a drought event.

The District's management of the groundwater resource includes the potential use of aquifer storage and recovery (ASR), where water is pumped into the aquifers and stored during the winter months to better prepare for the summer peak season. The District has had a permit with the Washington Department of Ecology to develop the ASR program and is attempting to acquire a recovery permit. Unusual weather events such as a dry winter season could potentially affect this recharge cycle and cause shortages.

Development on the Sammamish Plateau has led to increase in both the amount of impervious surfaces throughout the areas served by the District and the demand for water service. Impervious surfaces may direct surface water to storm drains, and eventually into streams, rivers and lakes, instead of percolating through the soil and recharging aquifers. As development and impervious areas increase, the impacts of reduced rainfall during a drought event will be accentuated. During summer peak season demand, particularly in a dry year, demands increase more leading to increased pumping of the supply wells and lower aquifer levels.

A summer of sustained higher than normal temperatures and following a winter of lower than normal precipitation can contribute to considerable aquifer drawdown, which affects both water quantity and quality. Although drawdown around the wells can become a problem, the District's groundwater aquifers generally act as storage reservoirs. Drought events lasting one or two years usually impact the District less than other purveyors that rely on solely a surface water supply.

The District is a member of the Cascade Water Alliance, which consists of eight member utilities that serve over 300,000 customers. The District currently receives water from the regional supply system operated by Seattle Public Utilities. As such, both Cascade and the District are subject to any water shortage events that affect the Seattle utility. In addition, Cascade is limited to a block of water supply, which, if exceeded, can lead to substantial monetary penalties. Cascade manages the Seattle contract and is looking to Lake Tapps as a future source of supply.

Operational Situations
An operational situation requiring implementation of the WSRP can occur when a critical link in the District's system is not available for service. The inability to operate a portion of the water system at full capacity may result in a situation where there is a need to achieve a significant

water use reduction, but over a limited period of time. The affected critical link could be a storage tank, well, booster pump, treatment system, telemetry system or transmission facility.

As demand within the District increases, the flexibility of the system decreases. The ability to shift operations between wells decreases, as all wells become required to operate at or near their capacity. The storage needed within each pressure zone also gets closer to the systems design capacity making it more difficult to schedule necessary maintenance. In other words, as the District grows, the wells, booster pumps, transmission mains and storage tanks will be operating at or near their capacity. In this situation, it will become more difficult to adjust operations for maintenance and required replacements. Although connection of the regional water supply provides some flexibility, managing the District's water supply system can still be challenging at times.

However, by comparing operation and maintenance schedules for each year with anticipated demands, these water shortages can often be identified in advance. This advance notice can be used to implement the WSRP in a controlled, systematic manner.

WSRP Water Use Curtailment versus Conservation

There are important differences between long-term conservation programs and curtailment, or reducing water use during a water supply emergency incident. During a WSRP emergency, the District may take actions that quickly reduce water use, are relatively short-lived, and usually involve some tradeoffs or hardships for customers. Conservation programs, on the other hand, are long-term programs structured to encourage customers to reduce water waste and increase water efficiency in a sustainable manner. Some programs offer financial incentives for implementing water conservation, such as the District's commercial irrigation audit program. The focus of the public message and information strategy is different for each program. The long-term conservation message of encouraging an environmental ethic of conservation shifts during water supply shortage situations to a more personal message of using water efficiently to ensure adequate supply is available for everyone. However, conservation methods included in the District's conservation programs may be promoted as part of the strategies employed during a water supply shortage situation.

WATER SHORTAGE RESPONSE PLAN STAGES

STAGE ONE: ADVISORY STAGE

Objectives

- To prepare the District and water customers of a potential water shortage, thereby allowing all parties adequate time for planning and coordination.
- To undertake supply and demand management actions that forestall or minimize the need later for more stringent actions.

Triggers

Many conditions may cause concern about water availability and signal a potential water shortage. Conditions that would trigger the Advisory Stage include:

- Total aquifer supply storage is not projected to be at standard operating capacity as of June 1, due to low aquifer levels.
- Total aquifer supply storage is significantly below historical normal levels for the current time of year, and data indicates that expected demands may not be met if this trend worsens or continues.
- Total regional supply is significantly below historical normal levels, and regional water purveyors have indicated an intention to implement the advisory stage of their plans.
- Weather conditions over the previous winter(s) have been particularly dry with lower than normal rainfall quantities.
- Operational situations are predicted that may affect the District's ability to provide water service at a level necessary to meet projected demands.

The Advisory may be withdrawn when water supply conditions return to a normal situation.

Public Message

"The potential exists for lower than normal water supply. Customers **may** be asked to reduce consumption unless conditions return to normal. We will keep you informed."
OR
"The potential exists for operational situations that would make it difficult for the demand to be met at all times. Customers **may** be asked to reduce consumption until the situation is corrected. We'll keep you informed."

Internal Operating Actions

1. The District will form the Water Conservation Task Force of essential staff to meet to evaluate conditions, determine actions and make task assignments.
2. Intensify communication with all staff members, particularly water team members.
3. Intensify data collection actions for well pumping records, tank level records, monitoring aquifer levels, regional water supply levels and weather conditions.

4. Monitor Automated Metering Infrastructure (AMI) data to develop a baseline of customer use to compare to their consumption during varying stages of the plan.

5. Assess current water main flushing activities to determine whether they should be accelerated to be completed prior to the peak season, or reduced to conserve supply.

6. Assess water quality in aquifers and distribution system to target areas that may experience severe degradation with reduced consumption.

7. Develop a list of critical water uses and users.

8. Initiate planning and preparation for Voluntary stage actions. Evaluate the ability, resources, and plans to move into the Voluntary stage and begin preparatory measures.

Communication Actions

1. Brief the Board of Commissioners and all District staff members.

2. Send an initial message to the public through website postings, newsletters, and social media outlets to inform them of the potential situation.

3. Intensify the ongoing local print media education effort regarding the water system, particularly the relationship between supply and demand. Provide current data to local newspapers. Media lists can be found in the District's *Emergency Response Plan.*

4. Provide status report to entities with special interests, public agencies, including the Cities of Sammamish and Issaquah, Northeast Sammamish Sewer and Water District, Eastside Fire and Rescue, the Lake Washington and Issaquah School Districts, King County Parks Department, King County Department of Development and Environmental Services (DDES), Cascade Water Alliance and large commercial customers.

5. Prepare and distribute public information materials explaining the WSRP Stages and expected ranges of actions. Depending on the time available to disseminate information, this may include newsletters or other bill inserts or direct mail.

6. Prepare "Frequently Asked Questions and Answers" for customers, including developers, that may be planning new landscaping. This information should include time of day and seasonal considerations.

7. Post updated status reports on the District's website.

8. Develop and monitor a "Water Use Reduction Hotline" for customers to receive information about WSRP stages and tips for water conservation.

9. Change the water advisory signs posted on major streets entering the District to indicate that the District has implemented the Advisory Stage. Signs change during each activation stage and red flags are fixed to the signs indicating the change in stages.

STAGE TWO: VOLUNTARY STAGE

Objectives

- To inform the District water customers of a water shortage and the need for them to voluntarily reduce water use and eliminate water waste.
- To reduce water use to meet consumption goals through voluntary customer actions.
- To forestall or minimize the need for more stringent demand or supply management actions.
- To minimize the disruption to customers while meeting consumption goals.
- To maintain the highest water quality standards throughout the shortage.

Triggers

The Voluntary Stage is implemented when one or more of the following factors apply:

- The limited water supply conditions identified in the Advisory Stage have developed or worsened.
- Operational situations exist that will limit the District's ability to provide water supply.
- Water use demand projections indicate a systematic response to reducing the demand is required.

Public Message

"We are relying on the support and cooperation of **all** water users to reduce consumption and stretch the water available. Customers should reduce their water use by _____ percent, or by ___gallons per household per day. [Fill in blanks based on each particular situation.] Customers are responsible for determining how they will meet that goal. Water waste is not acceptable. If everyone cooperates, more stringent restrictions may be avoided."

Internal Operating Actions

1. Continue all actions listed in Advisory Stage.

2. Water Team to prepare weekly reports for the Task Force on supply conditions and consumption levels.

3. Task Force will consider the current and projected supply conditions and the seasonal demand and set consumption goals, which may be revised as necessary.

4. Eliminate all operating system water uses, such as pipeline flushing, where determined to be non-essential to maintain water quality.

5. Restrict hydrant permits to essential purposes, including recall of hydrant permits previously issued. This should include contacting each registered hydrant user.

6. Eliminate washing of District fleet vehicles except by recycling car washes.

7. Limit nondiscretionary water use such as hosing of sidewalks, driveways, parking lots, etc. at District facilities to situations where it is necessary for public health and safety.

8. Limit landscape watering around District office and water established plants only when necessary. Water early in the morning to reduce evapotranspiration rate.

9. Activate any regional interties as necessary to increase emergency supply availability, if regional supplies are available during the water emergency.

10. Activate any existing emergency interties with adjacent purveyors to increase emergency supply availability.

11. Increase water quality monitoring actions.

12. Task Force and District managers will evaluate whether target consumption levels and supply conditions warrant a rate surcharge to reinforce voluntary actions and/or to recover revenue losses. District staff will work through the General Manager to make a recommendation to the Board of Commissioners.

13. Initiate remaining planning and preparation for the Mandatory Stage.

Communication Actions

1. Water Conservation Task Force will establish systematic communications with Board of Commissioners, including the suggested nature and scope of the voluntary measures and strategies.

2. Prepare and distribute an initial detailed message to the public through website postings, newsletters, and social media outlets to alert them of an escalating situation and that more information will be forthcoming.

3. Provide status reports to entities with special interests, public agencies including the Cities of Issaquah and Sammamish, Northeast Sammamish Sewer and Water District, Eastside Fire and Rescue, the Lake Washington and Issaquah School Districts, King County Parks Department, King County DDES, Cascade Water Alliance and large commercial customers.

4. Coordinate with affected agencies regarding demand management actions, especially in the reduction of irrigation for parks and athletic fields.

5. Customer service personnel will notify customers of obvious water waste, such as hoses without shutoff nozzles, irrigating during the heat of the day, excessive water running into storm drains, etc., with "Water Conservation Notice" door hangers. The door hangers inform the customer about water waste and the need to conserve.

6. Communications and Outreach Coordinator, acting as Public Information Officer, will initiate a detailed public information, media and advertising campaign:
   - Issue press releases to local newspapers, television and radio stations.
   - Publish a list of recommended actions for customers to take to reduce their water consumption in local newspapers, the District newsletter, and the District website.
   - Send out a direct mailing to all District customers with a list of the recommended actions.
   - Promote consumption goals for typical households, and a percentage reduction goal for commercial customers.
   - Develop a marketing plan that serves to keep customers informed about supply and demand conditions, recommends customer actions to reduce demand significantly; reinforces desired customer actions, and reminds customers that if goals are not achieved, mandatory restrictions may be necessary.

- Identify what potential next steps will be to reduce demand including timing, type of restrictions, and if surcharges should be imposed.
- Provide water quality information in public information, so that if flushing is necessary, the public understands that it is essential for water quality maintenance.

7. Post updated status reports on District website.

8. Set up and promote the "Water Use Reduction Hotline" for customers to receive information about WSRP Stages and tips for water conservation.

9. Post Voluntary stage signs at entrances to areas served by the District.

10. Identify customers with large irrigation accounts and promote the use of daily weather information, such as rainfall and evapotranspiration (ET) rates to minimize irrigation use.

11. Contact largest water users to request a specific percentage reduction.

12. Request Eastside Fire and Rescue to limit training exercises that use water.

CUSTOMER WATER USE REDUCTION ACTIONS

Examples of Residential Indoor Actions

- Put food coloring in your toilet tank. If it seeps into the bowl without flushing, you have a leak. Fixing it could save up to 1,000 gallons per month.

- Run your clothes washer and dishwasher only when they are full and save 1,000 gallons per month.

- Keep a pitcher of cold drinking water in the refrigerator, rather than running the faucet until the water gets cold.

- Shorten your showers by a minute or two and save 150 gallons per month. Try to limit showering time to five minutes.

- Avoid letting the faucet run while shaving, brushing teeth, or washing vegetables and save up to 25 gallons per month.

- While waiting for hot water, use a container to catch tap water that would normally be wasted for use on indoor or outdoor plants.

Residential Outdoors

- Wash cars less often. Instead of using the hose, consider a commercial car wash that recycles water.

- Do not use water to clean sidewalks, driveways, and decks. Use a broom or a power blower instead.

- Always use a shut-off nozzle when using the hose. Be sure there are no leaks in any hose fittings.

- Eliminate outdoor water play, such as running through a sprinkler, plastic water slides, and wading/swimming pools that require frequent re-filling.

- Cover pools and hot tubs when not in use to minimize evaporative losses.

Commercial and Residential Landscape

- Water lawns and gardens only early in the morning or late in the evening to reduce water loss from evaporation. 30% or more of your water is lost to evaporation when watering in the heat of the day.

- Consider letting established lawns go dormant until the shortage is over. Homes that normally water lawns will save from 25% to 50% by not watering lawns. Water your lawn deeply at least once a month to help it survive the drought.

- Do not water lawns when it is raining! Learn how to change the program that controls your system in order to cut back on irrigation time. Turn off automated irrigation system clocks during rainy spells. Consider installing a rain sensor on automatic irrigation systems that will override the system during rainfall. Consider having an irrigation audit done to ensure that your system is using water efficiently.

- Water established plants only when necessary, testing the soil moisture levels in the root zone with your fingers. Two to four inches of mulch (such as compost or wood chips) in your planting beds will help retain moisture.

- Use a rain barrel to capture water from rooftops. Water from rain barrels can be used to water plants or for car washing.

- Create tree wells around trees to minimize runoff when watering.

Commercial

- Set goals for reduced water use and inform managers and employees. Give businesses ideas for limiting water use and ask them for theirs.

- Repair all leaks and dripping faucets. Ensure that constantly running toilets are repaired. Urge employees to report leaks. Encourage the installation of 1.6 gallon per flush toilets in older commercial buildings.

- Reduce or eliminate routine vehicle cleaning during the shortage. Use a local commercial car wash facility that recycles water.

- Ensure that all hoses are fitted with shut-off nozzles.

- Eliminate hosing as a means of disposing of used ice.

- Eliminate all hosing of walkways, parking lots and loading docks. If washing paved areas is necessary for public health and safety, pressure washers use substantially less water.

- Postpone routine building washing until after the shortage.

- Post flyers informing customers of the nature of the water shortage and ask for cooperation in reducing water use.
- Turn off all non-recirculating fountains. On windy days, when there is significant water loss, turn off **all** fountains.
- Ask restaurants to deliver water only on request.
- Accelerate restrooms upgrades by replacing older toilets with 1.6 gallon-per-flush models.

This page intentionally left blank.

STAGE THREE: MANDATORY STAGE

Objectives

- To ensure that throughout the remaining duration of the water shortage, an adequate water supply exists to protect public health and safety.
- To restrict certain defined water uses in order to meet consumption goals that have not been met through voluntary customer actions.

Triggers

This stage is implemented when the Task Force determines that:

- Measures to reduce water use implemented in the Voluntary Stage are not adequately reducing demand.
- The time available to implement measures to reduce water use is not sufficient to allow education of customers required for voluntary compliance.
- It is evident the level of water use reduction required would not be achieved through voluntary compliance.

Public Message

"The District finds it necessary to impose mandatory restrictions to reduce demand because the voluntary approach is not resulting in the necessary water use reductions. Customers must reduce their water use by _____ percent, or by ___gallons per household per day. [Fill in blanks based on each particular situation.] The District is continuing to rely on the support and cooperation of the public, but needs to restrict certain water uses in order to ensure that throughout the duration of this shortage, an adequate supply of water is available for public health and safety. The District will be conducting enforcement actions to ensure that our customers adhere to these restrictions. You may receive a written warning or fines for restriction violations."

Internal Operating Actions

1. Continue all actions from Advisory and Voluntary Stages, as appropriate.
2. Task Force will develop a list of recommended water use restrictions and exemptions from restrictions.
3. Task Force to set up a process for receiving, recording and responding to reported violations of restrictions.
4. Finalize and implement procedures to provide to the Board of Commissioners to adopt water use restrictions and assess fines where mandatory restrictions are not followed. See Mandatory Restrictions Enforcement Checklist.
5. Initiate planning and preparation for the Rationing Stage.

Communication Actions

1. Water Conservation Task Force will provide periodic reports to the Board of Commissioners, including the suggested nature and scope of the mandatory restrictions, implementation strategies, and customer response data.

2. Prepare and distribute an initial detailed message to the public through website postings, newsletters, and social media outlets to alert them of an escalating situation and that more information about this stage will be forthcoming.

3. Provide status reports to entities with special interests, public agencies including the Cities of Issaquah and Sammamish, Northeast Sammamish Sewer and Water District, Eastside Fire and Rescue, the Lake Washington and Issaquah School Districts, King County Parks Department, King County DDES, Cascade Water Alliance and large commercial customers.

4. Through an intensive media campaign and direct mailing, announce to District customers the:
   - Scope and nature of mandatory restrictions
   - Reasons for imposing the restrictions
   - Consumption goals
   - Additional restrictions that may be imposed if water use reduction goals are not achieved
   - Enforcement mechanisms and fines
   - Projections for how long restrictions will be in place
   - Rate surcharges

5. Clearly distinguish between lawn/turf watering and watering gardens and ornamentals.

6. Clearly identify any exemptions from water use restrictions.

7. Clearly state that no exemptions from lawn watering restrictions will be provided for new lawn installations.

8. Work with King County, City of Sammamish and City of Issaquah Parks Departments to restrict irrigation levels in park areas to levels that meet or exceed the irrigation restrictions, while maintaining public safety.

9. Work with King County, City of Sammamish, and City of Issaquah Planning Departments to defer landscape installation requirements until the shortage is over. Exemptions will not be permitted for watering new lawn installations.

10. If some irrigation is allowed under the water use restrictions, contact large irrigation customers, including Klahanie Homeowner's Association and Providence Point and inform them that the District may have to shut down their irrigation meters as an emergency action in the event of an immediate water shortage supply situation.

11. Provide area landscape firms with water use restriction information.

12. To promote understanding between neighbors, the District urges customers that irrigate with water from private wells or Lake Sammamish, with legal water rights, to inform the District and neighbors of the water source.

13. Post updated status reports on the District website and social media sites.

14. Update the "Water Use Reduction Hotline" for customers to receive information about WSRP Stages, water restrictions, and tips for water conservation.

15. Post mandatory restrictions signs at entrances to areas served by the District.

16. Continue and enhance communication actions from the Advisory and Voluntary Stages.

17. Advise that Eastside Fire and Rescue must discontinue the use of water in training exercises until the emergency is over.

18. Evaluate resources and plans for moving into the Rationing Stage. As appropriate, begin preparatory measures.

MANDATORY CUSTOMER WATER USE RESTRICTIONS MENU

1. Limit all lawn/turf watering to match the District's Lawn Watering Calendar, or less frequently to one day per week as necessary.

2. Prohibit all daytime irrigation of lawn, turf **and** garden watering between 10:00 AM and 7:00 PM.

3. Prohibit all lawn/turf watering, including new lawn/turf installations.

4. Prohibit use of any ornamental fountain using drinking water for operation or make-up water.

5. Prohibit car washing except at commercial car wash facilities that recycle water.

6. Rescind all hydrant permits.

7. Prohibit washing of sidewalks, streets, decks or driveways, except as necessary for public health and safety.

8. Limit pressure washing of buildings to situations that require it as part of a scheduled building rehabilitation project (e.g. painting.).

9. Prohibit water waste, including untended hoses without shut-off nozzles, obvious leaks, and allowing water running to waste (such as gutter flooding and irrigation systems with spray patterns that are directed at paved areas).

Exemptions

1. For purposes of dust control, water may be applied to construction areas or other areas needing to comply with air quality requirements at the minimum rate necessary to achieve the desired result. Reclaimed water must be used for dust control where available.

2. Ballfields and playfields must be watered at the **minimum rate necessary** to control dust and to ensure that the fields are soft enough to minimize safety or liability concerns.

3. Customers with special medical needs, such as home dialysis, will be exempted from any emergency surcharge or restrictions, provided these customers notify the District of such a need. Their exemptions will not apply to outdoor water use.

MANDATORY RESTRICTIONS ENFORCEMENT CHECKLIST

_____ Determine fines and/or surcharges to be imposed for mandatory restriction infractions. Determine whether there will be "one fine for all infractions," or whether certain selected water use reduction actions would command a higher fine than others would.

_____ Determine the number of warnings before fines or surcharges applied.

_____ Establish a database for tracking violations.

_____ Print self-duplicating "Notice of Violation" forms, one copy for location where violation occurred, one to record violation with billing. Print violations and fines on the Notice of Violation.

_____ Assign and train field staff with customer service and communication experience to serve as "Water Watchers" who identify problems and report to the office.

_____ Establish procedure for "Water Watchers" to record warnings and penalties on customer accounts.

_____ Establish a "hotline" for customers to report violations. To help avoid frivolous complaints, recorded message should note that only complaints with name and address of complainant would be pursued. Also, establish a site on the website for reporting violations.

_____ Provide all field and customer service staff members with fact sheets and question-and-answer sheets. Provide briefings on restrictions, enforcement procedures. Train field staff to tag obvious violations.

STAGE FOUR: RATIONING STAGE

Objectives

- To ensure that throughout the water shortage situation, an adequate water supply exists to protect public health and safety.
- To sharply reduce water demand.
- Restrict certain defined water uses in order to meet consumption goals.

Triggers

This Stage is implemented when the Task Force determines that:

- It is necessary to reduce demand immediately, as a critical water supply situation exists.
- Significant water use reduction is required to maintain public health and safety.
- Measures to reduce water use implemented in the Voluntary and Mandatory Stages have not adequately reduced demand.
- The time available to implement measures to reduce water use is not sufficient to allow education of customers required for voluntary or mandatory compliance.
- It is evident the level of water use reduction required would not be achieved through voluntary or mandatory compliance.

Public Message

"The District finds it necessary to impose water rationing to reduce demand so the public health and safety of District customers can be maintained. The District needs to restrict certain water uses and we rely on the cooperation of the public. You may receive a written warning or fines for restriction violations."

Internal Operating Actions

1. Continue actions from Advisory, Voluntary and Mandatory Stages, as appropriate.

2. Define the problem as an emergency and follow procedures for the Board of Commissioners to formally declare an emergency, and initiate the Incident Command System and Emergency Response Plan.

3. Task Force to develop a list of recommended water use to be curtailed and exemptions from curtailment.

4. Water Conservation Task Force will establish water use reduction goals. Single family residential may be set as a standard per house allotment or as a percentage reduction from the previous year's consumption. Since the Rationing Stage is for critical situations, the reductions may be required below the customers normal winter month use. Commercial, multifamily and industrial users will be asked to reduce water use by a set percentage of their average consumption during the previous year.

5. Establish water rate surcharges based on consumption, and provide to the Board of Commissioners for adoption.

6. Establish penalties or excess use charges for customers that exceed the water allotment, and provide to the Board of Commissioners for adoption.

7. Modify billing system to implement any approved surcharges and penalties.

8. Increase enforcement actions, in accordance with the applicable resolution approved by the Board of Commissioners. Refer to Mandatory Stage for options.

9. Provide training for personnel and deploy additional water curtailment enforcement patrols.

10. Inform local law enforcement of curtailment actions and the potential need for assistance.

11. Further enhance aquifer level and water quality monitoring actions.

12. Task Force to increase meeting frequency to daily status briefings, to review the current situation and determine which actions are working and those that need to be improved. Focus on messages that are easy to communicate, implement and have the potential to sharply reduce demand.

Communication Actions

1. Water Conservation Task Force will increase the frequency of reports to the Board of Commissioners. The initial report will include suggested nature and scope of proposed curtailments. Subsequent reports should provide detail on the implementation of the Rationing State and customer response data.

2. Prepare and distribute an initial detailed message to the public through website postings, newsletters, and social media outlets to alert them of an escalating situation and that more information about this stage will be forthcoming.

3. Provide status reports to entities with special interests, public agencies including the Cities of Issaquah and Sammamish, Northeast Sammamish Sewer and Water District, Eastside Fire and Rescue, the Lake Washington and Issaquah School Districts, King County Parks Department, King County DDES and large commercial customers.

4. Through a media campaign as well direct mail, announce to District customers the:
   - Scope and nature of rationing and curtailments
   - Reasons for imposing the curtailments
   - Explanation that water is being rationed for public health and safety use only
   - Water use reduction goals
   - Enforcement mechanisms and fines
   - Projections for how long curtailments will be in place
   - Rate surcharges

5. Clearly identify any exemptions from the water use curtailment.

6. Inform customers about possible pressure reductions and problems this may cause.

7. Provide area landscape firms with water use curtailment information.

8. Provide contractors and landscape firms with information on locations to obtain reclaimed water for street cleaning, construction projects, landscape irrigation, dust control, etc. such as from King County wastewater treatment plants.

9. Post updated status reports on the District website.

10. Update the "Water Use Reduction Hotline" for customers to receive information about WSRP Stages, water curtailments, and tips for water conservation.

11. Post water rationing signs at entrances to areas served by the District.

12. Continue and enhance communication actions from the Advisory, Voluntary and Mandatory Stages.

13. Keep Eastside Fire and Rescue informed about the water shortage emergency and require they discontinue the use of water in training exercises until the emergency is over.

RATIONING CUSTOMER WATER USE CURTAILMENT MENU

1. Prohibit all lawn/turf irrigation.

2. Prohibit all lawn/turf watering, including new lawn/turf installations.

3. Prohibit all irrigation of gardens and ornamental landscapes.

4. Prohibit use of any ornamental fountain using drinking water for operation or make-up water.

5. Prohibit car washing except at commercial car wash facilities that recycle water.

6. Rescind all hydrant permits.

7. If a source of reclaimed water is available, prohibit use of water for dust control at construction areas.

8. Prohibit use of water for dust control at construction areas.

9. Prohibit washing of sidewalks, streets, decks or driveways, except as necessary for public health and safety.

10. Prohibit pressure washing of buildings unless water is obtained from sources other than the District.

11. Prohibit filling or addition of water to swimming pools at public and private club facilities.

12. Consider limitation of issuance of new meter installations for irrigation and/or domestic uses.

Exemptions

1. If a source of reclaimed water is not available and dust control is required to comply with air quality requirements, water may be applied to construction areas or other areas at the minimum rate necessary to achieve the desired result. Reclaimed water must be used for dust control where available.

2. Customers with special medical needs, such as home dialysis, will be exempted from any emergency surcharge or restrictions, provided these customers notify the District of such a need. Their exemptions will not apply to outdoor water use.

MONITORING AND EVALUATION

Throughout the duration of any activation, the District closely monitors consumption reduction by examining operational pump log records and tracking customer consumption through the District's AMI system. District staff compare this data to the selected reduction goals throughout the activation to evaluate how customers are responding to the water shortage situation. This monitoring helps staff evaluate the need to move into and out of varying stages and enforce more stringent restrictions if necessary.

The District's AMI system and software will be a valuable tool to help customers quickly identify any leaks or consumption and notify the customer to repair the leaks. AMI will also help staff track excessive water waste, monitor irrigation water use among high users, and

The District will also review lessons learned from each water shortage incident to develop an improvement plan to make adjustments before the next water shortage event occurs.

SAMMAMISH PLATEAU WATER & SEWER DISTRICT
KING COUNTY, WASHINGTON

RESOLUTION NO. 4664

RESOLUTION OF THE BOARD OF COMMISSIONERS OF SAMMAMISH PLATEAU WATER AND SEWER DISTRICT, KING COUNTY, WASHINGTON, ESTABLISHING FINES FOR WATER USAGE IN VIOLATION OF MANDATORY WATER USE RESTRICTIONS; AND REPEALING RESOLUTION NO. 2781.

WHEREAS, the Sammamish Plateau Water and Sewer District ("District") adopted a Water Shortage Response Plan on February 5, 2001, by the adoption of Resolution No. 2725 ("2001 WSRP") to provide systematic responses and methods to reduce customer demand due to a water supply shortage from an emergency, drought event or operational situation; and

WHEREAS, the District adopted an update to the 2001 WSRP on April 3, 2017, by the adoption of Resolution No. 4663 ("2017 WSRP"); and

WHEREAS, the 2017 WSRP includes mandatory emergency water use restrictions in the Mandatory and Rationing Stages, and the District desires to establish policies and procedures for assessing fines for violation of these water use restrictions; and

WHEREAS, RCW 57.08.005(3) provides the District full authority to regulate and control the use, content, distribution, and price of water supplied in such a manner as is not in conflict with general law, and RCW 57.08.170 authorizes the District to adopt a water shortage response plan and emergency water use restrictions and to enforce such a plan and emergency water use restrictions by, among other things, imposing fines as provided by resolution for failure to comply with any such water shortage response plan or water use restrictions; and to enforce the collection of such fines as provided in such RCW; and

WHEREAS, the District Board of Commissioners now desires to adopt fines and penalties to enforce the 2017 WSRP and emergency water use restrictions; now, therefore,

BE IT RESOLVED, by the Board of Commissioners of Sammamish Plateau Water & Sewer District, King County, Washington, as follows:

1. Fine Structure: Fines for violation of mandatory water use restrictions set forth in the 2017 WSRP and implemented by the District are hereby approved and shall be assessed as follows:

    a. First violation: A written notice of warning shall be given to the customer, with reference to the type of violation in accordance with the mandatory water use restrictions established by the District.

b. Second violation: A fine of Fifty Dollars ($50.00) shall be assessed to the customer's utility service amount for a second violation, and any customer being notified of such violation shall pay such fine, which will be included in the customer's next regular billing for water service by the District; in the event the fine for water use restriction violation is not paid within 30 days of the date of the District water service billing including such fine, the fine shall then be delinquent, and the District shall enforce the collection of such fine pursuant to RCW 57.08.170, including the filing of a lien against the real property receiving District water service where the violation occurred.

c. Third violation: A fine of Two Hundred Fifty Dollars ($250.00) shall be assessed to the customer's account for a third violation; violations shall be collected pursuant to the procedure set forth in Section 1 (b) above.

d. Fourth violation: A fine of Five Hundred Dollars ($500.00) shall be assessed to the customer's account for a fourth violation; violations shall be collected pursuant to the procedure set forth in Section 1 (b) above.

e. Fifth and subsequent violations: A fine of One Thousand Dollars ($1,000.00) shall be assessed to the customer's account for a fifth and subsequent violations; violations shall be collected pursuant to the procedure set forth in Section 1 (b) above. In the case of a commercial irrigation system, the system shall be shut off and/or locked off. In the case of a hydrant permit, the permit shall be revoked.

2. Public Notice: The District shall notify customers through public announcements that mandatory water restrictions are in effect and that fines shall be imposed for any water usage in violation of mandatory water restrictions established at the time and the amount of such fine.

3. Appeal Procedure: In the event a customer against whom a fine for violation of mandatory water use restrictions has been imposed contests the amount of such fine or related District enforcement action, such customer may request a hearing before the Board of Commissioners. The customer must file his/her appeal in writing with the District, giving the name of the property owner, address of the property where the alleged violation occurred, the total amount of the violation fine, and a statement by the customer as to why the customer feels the fine(s) and/or enforcement action should not have been assessed and/or taken. Such appeal must be filed with the District within five (5) calendar days after receipt by the customer of (a) the District service billing which includes such fine(s) or (b) notice of any enforcement action taken by the District, such as service disconnection, whichever occurs first. The Board, upon such hearing being requested by the customer, shall set a time, place, and date for such a hearing after at least seven (7) days written notice of such hearing has been

provided to such customer, and the Board will hear such appeal. At the conclusion of such hearing, the Board may confirm, correct, modify, or rescind such fine or enforcement action as appropriate as the Board in its discretion may determine. Such appeal procedure must be followed by any customer contesting such fine and/or enforcement action; and a hearing must be held and a determination made by the Board prior to such customer taking or filing any judicial action regarding any fine or enforcement action. A customer assessed a fine for violation of mandatory water use restrictions which is appealed as provided herein shall not be required to pay such fine to the District until the Board makes a final determination on such appeal and notifies the customer of such determination.

4. Effective date: This resolution shall be effective the date set forth below.

5. Amendment: This resolution and the policies and procedures set forth herein shall amend and supersede all prior District restrictions, surcharges, and/or penalties for violations thereof, including Resolution No. 2781, to be in accordance with this resolution.

ADOPTED by the Board of Commissioners of Sammamish Plateau Water and Sewer District, King County, Washington, at a regular open public meeting held on the 3rd day of April 2017.

Individual Commissioner's Vote on this Resolution:

Approved: ✓ Opposed: Abstained: Absent:		Karen Moran, President and Commissioner
Approved: Opposed: Abstained: Absent:		Mahbubul Islam, Vice President and Commissioner
Approved: Opposed: Abstained: Absent:		Mary Shustov, Secretary and Commissioner
Approved: Opposed: Abstained: Absent:		Tom Harman, Commissioner
Approved: ✓ Opposed: Abstained: Absent:		Lloyd Warren, Commissioner

This page intentionally left blank.

Cascade Water Alliance
Shortage Management Plan

Resolution 2016-18

Adopted October 26, 2016

Table of Contents

1.0		Introduction and Purpose	3
2.0		Related Agreements and Water Rights	3
	2.1	Cascade Joint Municipal Utilities Authority Agreement	3
	2.2	Seattle Block Contract	5
	2.3	Tacoma Public Utilities Water Supply Agreement	5
	2.4	White River-Lake Tapps Water Rights	6
	2.5	Member Water Audit Agreements	6
3.0		Plan Activation and Applicability to Cascade Members	6
	3.1	Activation of SMP	6
	3.2	Water Shortage Management Committee	7
	3.3	Coordination with SPU and Members	7
	3.4	Applicability to Cascade Members	8
	3.5	Member Shortage Plans	8
	3.6	Communications During Water Shortages	8
	3.7	Relief of Conflicting Obligations During Water Shortages	8
4.0		Stages of Water Curtailment	9
	4.1	Advisory Stage	10
	4.2	Voluntary Stage	11
	4.3	Mandatory Stage	13
	4.4	Emergency Stage	15

Tables

Table 1: Triggers for Plan Activation and of Curtailment Stages 17
Table 2: Four Stages of Curtailment 18

List of Appendices

Appendix A: Actions that Can Reduce Water Usage by Distribution Systems and Customers

1.0 Introduction and Purpose

Municipal water suppliers must be prepared for water shortages in order to minimize effects on the communities they serve. This Shortage Management Plan ("SMP") outlines how Cascade Water Alliance ("Cascade") will respond to a water supply shortage affecting its regional water supply.

At the present time, Cascade purchases all of its water from Seattle Public Utilities ("SPU" or "Seattle"). Various events could cause a shortage in the SPU water supply system. These include reduced snowpack in the Cascade Range due to a dry winter or early spring melt; an earthquake or other event that damages reservoirs, treatment facilities or transmission lines; water quality problems; or intentional destructive acts. These different kinds of events may cause shortages with different characteristics in terms of advance warning, severity and duration. The SMP offers flexibility for a range of appropriate responses.

As required under Washington State Department of Health ("DOH") regulations, SPU and each Member of Cascade has its own shortage management plan to guide water system operations and interaction with end-use customers in each community during a water shortage. Cascade's SMP complements the SPU and Member SMPs.

Cascade's primary role in the event of a water shortage is to coordinate responses among the Cascade Member water systems that receive water from the regional supply and SPU, as the source of the regional supply. Therefore, this SMP focuses on the communication and coordination activities to be carried out by Cascade staff during a water shortage.

2.0 Related Agreements and Water Rights

2.1 Cascade Joint Municipal Utilities Authority Agreement

The Cascade Water Alliance Joint Municipal Utilities Authority Agreement ("Joint Agreement", 2012) established Cascade as a municipal corporation and provides the agreement of the Cascade Members on operations. Section 7.3 of the Joint Agreement provides (emphasis added):

> **7.3 Shortages and emergency.**
>
> A. Shortages. Members must respond to water shortages in a collective, shared fashion under a Cascade Shortage Management Plan adopted by the Board. Resources must be shared in a manner that reduces the risk of severe shortages to each Member. **Cascade's Shortage Management Plan may include without limitation, a definition and classification of shortages, a shortage contingency**

plan including mandatory programmatic actions among all Members in the event of shortages, allocation of authority for determining and responding to shortages, and a communications and outreach program for the public. Members shall not be required to implement Cascade's Shortage Management Plan in areas not served by the Supply System.

In the event of shortages, Cascade shall reduce or halt Interruptible Supply before invoking the Shortage Management Plan with respect to all Members with a Full Supply Commitment. However, the Board may, by 65% Dual Majority Vote, continue service in the amounts it deems appropriate to one or more Members receiving Interruptible Supply.

The Board may require that Members failing to comply with mandatory shortage management programs implemented under Cascade's Shortage Management Plan assume a disproportionate reduction in supply or pay penalty charges, or both.

In the event of a Cascade-wide water shortage, Members with Independent Supply may, without penalty, decline to participate in the shortage management program for that shortage by foregoing all supply from Cascade for the duration of the emergency or shortage.

To avoid shortages resulting from emergencies or the inability to develop sufficient supplies, **the Board may, by 65% Dual Majority Vote, establish moratoria on connections or additional commitments for future water services by the Members**. A moratorium may be discontinued by a Dual Majority Vote of the Board.

B. Emergency. The Board shall include in Cascade's Shortage Management Plan policies and procedures for addressing short-term disruptions of water supply.

The Joint Agreement also provides Cascade with the authority to impose minimum demand charges on Members (which Cascade has implemented in certain instances) as follows:

A Member shall be assigned a Demand Share based on the Board's best estimate of capacity to be used by that Member. The Demand Share shall be established based on an audit of that Member's past three (3) years of water use. After three (3) years as a Member, the baseline demand and capacity obligation for that Member shall be fixed based on actual experience as a Member. **A specific Demand Share may be set by the Board to account for circumstances, such as (by way of example and not by limitation) costs of extending the Supply System to a Member, or when Independent Supplies affect regional demand patterns.**

Section 7.5 (in part and emphasis added).

2.2 Seattle Block Contract

The 2013 2nd Amended and Restated Declining Block Water Supply Agreement Between the City of Seattle and Cascade Water Alliance ("Block Contract") provides for shortage management. Section 7.2 provides:

> Cascade and Seattle shall coordinate the development, adoption and implementation of their respective Water Shortage Management Plans. Before invoking its Water Shortage Management Plan, the Parties shall communicate with each other concerning current and projected water supply conditions.

Section 12.1 of the Block Contract recognizes that unilateral actions by Seattle may be needed at times due to unforeseen and unavoidable events, including water shortages. It provides (emphasis added):

> The Parties recognize that unforeseen and unavoidable events may occur which would require Seattle to act unilaterally for what it deems to be in the best interest of the general public served by the Seattle Water System; including water shortages resulting from drought circumstances and temporary reduction in water supply associated with turbidity events. **Upon the occurrence of an unforeseen or unavoidable event, Seattle shall, to the extent practicable, treat its wholesale and retail customers equally and any curtailment of supply shall be imposed proportionately among these customers.** This authority to act unilaterally carries with it a unilateral responsibility of Seattle to restore, expeditiously, the Seattle Water System to its pre-emergency capability to supply the region.

As a separate matter, Section 7.3 of the Block Contract provides that if water use restrictions are imposed on SPU by the terms of its agreements with Federal and State agencies and Tribes, such restrictions will be borne proportionally by SPU and its other wholesale customers, and Cascade with respect only to the size of the Cascade Block at the time curtailment is required. In this event, Cascade and its Members will need to review the restrictions and determine appropriate short-term or long-term actions.

2.3 Tacoma Public Utilities Water Supply Agreement

Cascade entered into an *Agreement for the Sale of Wholesale Water* (2005) with Tacoma Public Utilities (TPU). In 2012, Cascade and TPU amended the *Agreement* to require Cascade to make specified supply capacity reservation payments to TPU, in lieu of the minimum purchase payments provided for in the 2005 agreement. Through 2042, Cascade may request that TPU provide up to 8 MGD wholesale water supply, and TPU has sole discretion to determine the availability, disruption, interruption, suspension and curtailment of such supply. At this time, Cascade is not using this supply source. At such time as Cascade begins receiving regional water supply from Tacoma, the need to incorporate

shortage response actions in coordination with TPU will be reviewed.

2.4 White River-Lake Tapps Water Rights

The Water Right Permit No. S2-29920(A), issued in 2010 to Cascade for the withdrawal or diversion of water from the White River into Lake Tapps for municipal purposes, is subject to conditions including the maintenance of minimum flows in the White River and the maintenance of specified lake levels during a specified recreational period. These conditions are not considered in the SMP at this time for the following reasons: Cascade is not currently using Lake Tapps for municipal supply and Cascade's current planning vision indicates that Cascade's use of Lake Tapps is at least 20 years away. Cascade will update the SMP to include lake level triggers at such time as Lake Tapps is brought on line for municipal supply purposes.

2.5 Member Water Audit Agreements

Each Member has executed a water audit agreement with Cascade. For those Members with independent supply, that agreement defines and quantifies independent supplies, documents member utilization of those supplies, and establishes production requirements imposed on Members as related to those supplies.

3.0 Plan Activation and Applicability to Cascade Members

3.1 Activation of SMP

Cascade may activate its SMP under the following circumstances:

1) When SPU activates its Water Shortage Contingency Plan, the Cascade CEO may activate the SMP and determine the appropriate stage of curtailment and, at its next meeting, the Cascade Board will take action to end or continue activation at the appropriate stage of curtailment;

2) In the event that a supply shortage or threat of a supply shortage requires immediate action to prevent risks to public health and safety, the Cascade CEO may declare an emergency and activate the SMP and determine the appropriate stage of curtailment and, at its next meeting, the Cascade Board will take action to end or continue activation at the appropriate stage of curtailment; or

3) For any other reason through action of the Cascade Board.

Unless otherwise directed by the Cascade Board, the Cascade CEO, in consultation with the Water Shortage Management Committee (Section 3.2 below), may elevate or diminish the stage of curtailment from one stage to another as appropriate.

3.2 Water Shortage Management Committee

The Cascade CEO shall designate a Water Shortage Management Committee consisting of Cascade staff and Member staff to advise the Cascade CEO on implementation of the SMP. The Water Shortage Management Committee may be designated at any time, but no later than immediately following SMP activation and shall exist the duration of the water shortage. The existing Member staff committee may be designated as the Water Shortage Management Committee. The Cascade CEO may consult with the Water Shortage Management Committee by any means including in-person, by phone or by email.

3.3 Coordination with SPU and Members

As provided in the Block Contract with SPU, Cascade will coordinate and communicate closely with SPU regarding activation of the SMP and a change in the stage of shortage as indicated in Section 4 below.

Cascade and its Members have a key role in the communications strategy during a regional water shortage. It is anticipated that SPU will communicate with its own retail customers, wholesale customers, large retail customers, regional stakeholders, state/federal resource agencies, and regional media. Cascade encourages its Members to communicate with retail customers, wholesale customers, local stakeholders, and local media. Cascade will help to coordinate and facilitate communications among the Members and between the regional level and the local level.

Cascade will strive to make its public messaging at each stage of curtailment consistent with SPU's messaging during the shortage event.

Cascade will maintain a current copy of SPU's Water Shortage Contingency Plan on file at Cascade offices, and encourages Members that receive water from Cascade's regional water supply system maintain a copy of both the Cascade SMP and SPU Water Shortage Contingency Plan readily available with their own Member SMP.

In addition, the Block Contract with SPU contains provisions related to SPU's supply commitment and Cascade's participation in shortages. These include financial provisions that, in the event of a voluntary or mandatory curtailment, require revision to the cost borne by Cascade. Whenever SPU moves a shortage to the voluntary, mandatory or emergency stage, Cascade will initiate discussion with SPU regarding adjustments to the supply commitment and payments due from Cascade. Cascade will inform the Members of any proposed financial treatment regarding SPU charges occurring as a result of the shortage and these discussions.

3.4 Applicability to Cascade Members

Consistent with the Section 7.3 of the Joint Agreement, activation of the SMP applies to Cascade Members as follows:

- **Members receiving all of their water supply from Cascade:** Required to comply with Cascade's SMP.
- **Members receiving partial supply from Cascade:** Required to comply, in portions of their service areas that receive regional supply; *or* to discontinue use of Cascade supply during the water shortage.
- **Members not receiving Cascade supply.** Not required to comply with Cascade's SMP.
- **Members with interruptible supply**. *None at this time*.

3.5 Member Shortage Plans

DOH regulations at WAC 246-290-100(4)(f) require water utilities to have their own water shortage response plan. These are typically submitted to DOH every six years with their comprehensive water system plan update. Cascade recommends that Members review and revise their water shortage response plans to ensure the Member plans use similar stages of curtailment as listed in the Cascade SMP, and that provisions in the Member SMPs support effective coordination with SPU and Cascade during a water shortage.

3.6 Communications During Water Shortages

In addition to the communication actions listed for each curtailment stage in Section 4, in the event of a water shortage that requires this SMP to be activated, Cascade will coordinate closely with its Members and SPU regarding public communications. It is anticipated that SPU will take the lead on communications involving regional media such as major radio, television and newspaper outlets. Members will have the primary responsibility for communicating directly with their own customers and local communities. Cascade will coordinate communications among Members and SPU and will assist its Members issue consistent and effective communications to the communities that they serve.

3.7 Relief of Conflicting Obligations During Water Shortages

When the SMP is activated, and with each stage of curtailment, Cascade will review and adjust production requirements and minimum demand shares to avoid potentially contradictory obligations of members. Since minimum production requirements may be inconsistent with desired or mandated demand reductions, and since minimum demand shares provide financial disincentives to demand reduction, Cascade will determine necessary and appropriate

adjustments to provide for consistent incentives and impacts among members. Specifically:

- The Cascade CEO, in consultation with the Water Shortage Management Committee and each affected Member, will recommend to the Board to amend or suspend production requirements so that demand reduction and supply production objectives are not in conflict, while recognizing that increased reliance on independent supplies is a desirable outcome when addressing a shortage from Cascade's regional sources.

- The Cascade CEO, in consultation with the Water Shortage Management Committee and each affected Member, will recommend to the Board to amend or suspend minimum demand shares in order to encourage reduced demand on impacted regional sources.

- In the event that a shortage is caused by a shortage in independent supply resulting in a shortage that Cascade chooses to share in, the Cascade CEO, in consultation with the Water Shortage Management Committee and each affected Member, will recommend to the Board to make adjustments specific to each Member to reflect the unique circumstance of the shortage.

The recommended adjustments will be taken to the Board for approval or adjustment.

4.0 Stages of Water Use Curtailment

Cascade's SMP has four stages of curtailment that coincide with the stages of curtailment in SPU's Water Shortage Contingency Plan:

- Advisory Stage
- Voluntary Stage
- Mandatory Stage
- Emergency Stage

These four stages are designed for progressive implementation during a drought or other long-range disruption of water supply. <u>However, any of the four stages can be activated from the outset of the event as appropriate and the stage of curtailment maybe elevated or diminished from one stage to another as appropriate</u>.

Sections 4.1 through 4.4 provide details in each of the four stages of curtailment. Table 1 provides a summary of the triggers of each stage. Table 2 provides a summary of actions to be taken in each stage.

4.1 Advisory Stage

This stage is advisory only, and does not require curtailment actions by water users. The public is informed as early as meaningful data are available that a water shortage may occur.

4.1.1 Objectives of Advisory Stage

- Prepare Cascade, its Members and water users for a potential water shortage, thereby allowing for adequate planning and coordination.

- Support distribution system management actions by Cascade Members that can help to forestall or minimize the need for more stringent demand or supply management actions.

4.1.2 Triggers of Advisory Stage

1) Upon notice from SPU that it has activated the Advisory Stage of their Water Shortage Contingency Plan, the Cascade CEO may activate the SMP and the Advisory Stage and, at its next meeting, the Cascade Board will take action to end or continue activation; or

2) In the event that a supply shortage or threat of a supply shortage requires immediate action to prevent risks to public health and safety, the Cascade CEO may declare an emergency and activate the SMP and the Advisory Stage and, at its next meeting, the Cascade Board will take action to end or continue activation; or

3) The Cascade Board may act to authorize activation of Cascade's Advisory Stage.

4.1.3 Communication Actions During Advisory Stage

Once the Advisory Stage has been activated by Cascade, Cascade will:

- Inform Cascade Members that they are required to activate their Advisory Stage (or equivalent actions per each Member's individual SMP). This will not apply to Cascade Members exempted per Section 3.4 of this SMP.

- Establish a regular communication mechanism to keep Cascade Members and the Cascade Board informed regarding stages of curtailment; water supply conditions; actions taken by Cascade Members and others in the region; and information that should be communicated to the public, local parks departments, large customers, landscape industry professionals and others.

- Request Cascade Members carry out supply-side management actions they will take during the Advisory Stage to reduce use of water for local water distribution system operations,

and compile information on the actions taken. For Members that have independent supply, this may include relying more heavily on these supplies where feasible, to reduce pressure on the Cascade regional supply.

- If requested by SPU, participate on SPU's Water Shortage Advisory Group to help develop public information messages and materials and to provide input on Cascade Member actions.

- Assist Cascade Members acquire and distribute public information materials as needed. This may include materials from SPU or other sources, as appropriate. Post information on Cascade's web site regarding the Advisory Stage.

4.1.5 Operating Actions of Advisory Stage

- Cascade will initiate planning and preparation for actions under an elevated stage of curtailment, including an assessment of potential staffing impacts, training needs and communications strategies.

- Cascade will assist Members plan specific actions under an elevated stage of curtailment, including distribution system actions by the Member and voluntary water use curtailment actions Members can suggest to their end-use customers if the elevated stage of curtailment is activated.

4.2 Voluntary Stage

If supply conditions indicate the need for actions greater than those in the Advisory stage, the plan moves to the Voluntary Stage which relies on voluntary cooperation and support of customers to meet target consumption goals. During this stage, specific voluntary actions are suggested for residential and commercial customers.

4.2.1 Objectives of Voluntary Stage

- Encourage Members to take distribution system management actions to further stretch available supply.

- Encourage customer voluntary actions to maintain or reduce demand to meet target consumption levels.

- Forestall or minimize need for later more stringent demand or supply management actions.

- Maintain drinking water quality at acceptable levels throughout the shortage.

4.2.2 Triggers of Voluntary Stage

1) Upon notice from SPU that it has activated the Voluntary Stage of their Water Shortage Contingency Plan, the Cascade CEO may activate the Voluntary Stage and, at its next meeting, the Cascade Board will take action to end or continue activation; or

2) In the event that a supply shortage or threat of a supply shortage requires immediate action to prevent risks to public health and safety, the Cascade CEO may declare an emergency and activate the Voluntary Stage and, at its next meeting, the Cascade Board will take action to end or continue activation; or

3) The Cascade Board may authorize activation of Cascade's Voluntary Stage.

4.2.3 Communication Actions of Voluntary Stage

Once the Voluntary Stage has been activated by Cascade, Cascade will:

- Inform Cascade Members that they are required to activate their Voluntary Stage (or equivalent actions per each Member's individual SMP). This will not apply to Cascade Members exempted per Section 3.4 of this SMP.

- Request Cascade Members report to Cascade regarding supply-side management actions they will take during the Voluntary Stage. For Members that have independent supply, this may include relying more heavily on these supplies where feasible, to reduce pressure on the Cascade regional supply.

- Request Cascade Members communicate with their largest customers to request percentage reductions.

- Communicate regularly with Cascade Members regarding information that should be communicated to the public, local parks departments, large customers, landscape industry professionals and others. At the Voluntary Stage, this will include specific recommendations on how customers can reduce water consumption, including links to the *savingwater.org* website or equivalent information resources.

- Communicate with the Washington State Department of Health regarding actions being taken by Cascade and its Members.

- If requested by SPU, participate on SPU's Water Shortage Advisory Group to help develop public information messages and materials and to provide input on Cascade Member actions.

- Assist Cascade Members acquire and distribute public information materials as needed. Review information from SPU, including materials in the Water Shortage Contingency Plan, regarding actions customers can take to reduce their water consumption. As appropriate, post information for Cascade Members and their customers on Cascade's web site regarding the Voluntary Stage. Appendix A provides examples of water saving actions customers can take.

4.2.4 Operating Actions in Voluntary Stage

- Cascade will assess revenue implications and potential remedies and report to the Cascade Board.

- Cascade will initiate planning and preparation for actions under an elevated stage of curtailment, including an assessment of potential staffing impacts, training needs and communications strategies. Assist Cascade Members to identify mandatory restrictions that may apply during the Mandatory Stage, if it is needed.

4.3 Mandatory Stage

If supply conditions indicate a need for actions greater than those in the Voluntary stage, the Mandatory Stage would be implemented. This stage prohibits or limits certain water actions. Cascade will rely on its Members to enforce mandatory actions, using techniques as appropriate to each service area or jurisdiction.

4.3.1 Objectives of Mandatory Stage

- Achieve targeted goals for reducing consumption, by restricting certain water uses. Goals will be determined in consultation with SPU, based on the characteristics and severity of the water shortage.

- Ensure that adequate water supply will be available for the duration of the supply shortage.

- Minimize the disruption to customers' lives and businesses while meeting target consumption goals.

- Maintain drinking water quality at acceptable levels throughout the shortage.

- Promote equity among Cascade Members in responding to the supply shortage.

4.3.2 Triggers of Mandatory Stage

1) Upon notice from SPU that it has activated the Mandatory Stage of their Water Shortage

Contingency Plan, the Cascade Board will consider activation of the Mandatory Stage; or

2) In the event that a supply shortage or threat of a supply shortage requires immediate action to prevent risks to public health and safety, the Cascade CEO may declare an emergency and activate the Mandatory Stage and, at its next meeting, the Cascade Board will take action to end or continue activation; or

3) The Cascade Board may authorize activation of Cascade's Mandatory Stage.

4.3.3 Communication Actions of Mandatory Stage

Once the Mandatory Stage has been activated by Cascade, Cascade will:

- Inform Cascade Members that they are required to activate their Mandatory Stage (or equivalent actions per each Member's individual SMP). This will not apply to Cascade Members exempted per Section 3.4 of this SMP. Enforcement actions may be needed in the Mandatory Stage. Cascade expects each Member to enforce restrictions in a manner suitable to the local service area or to work with other local governments having enforcement powers to do so.

- Gather information from SPU regarding any water quality or water pressure problems, if any, that are identified or that may possibly occur at the mandatory stage, and communicate these to Cascade Members management, operations staff and public affairs staff.

- Continue communication actions from the Voluntary Stage, with modifications as appropriate for the Mandatory Stage (as determined in consultation with SPU and Cascade Members).

4.3.4 Operating Actions of Mandatory Stage

- Cascade will continue operating actions from the previous stages, and:

- Cascade will initiate planning and preparation for Emergency Stage actions, including an assessment of potential staffing impacts, training needs, communications strategies. Cascade will assist Members to plan specific actions that may be needed if the Emergency Stage is activated.

- If necessary the Board will consider enforcement actions against any Members who do not comply with Mandatory Stage actions, as allowed under the Cascade Joint Agreement.

4.4 Emergency Stage

At this stage Cascade and its Members recognize that a critical water situation exists and that, without additional significant curtailment actions a shortage of water for public health and safety is imminent. This would be used as the last stage of a progressive drought or similar situation, or to address an immediate crisis such as a disruption to water sources, treatment or transmission facilities. This type of situation has never occurred in Cascade or SPU history, but could occur during a very severe drought or under emergency conditions such as a major earthquake that ruptures transmission pipelines.

4.4.1 Objectives of Emergency Stage

- Strive to meet the water use goals established for this stage, recognizing that customers' lives and businesses may be significantly impacted in order to achieve necessary water savings. Goals will be determined in consultation with SPU, based on the characteristics and severity of the water shortage.

- Promote equity among Cascade Members in responding to the supply shortage.

4.4.2 Triggers of Emergency Stage

1) Upon notice from SPU that it has activated the Emergency Stage of their Water Shortage Contingency Plan, the Cascade Board will consider activation of the Emergency Stage; or

2) In the event that a supply shortage or threat of a supply shortage requires immediate action to prevent risks to public health and safety, the Cascade CEO may declare an emergency and activate the Emergency Stage and, at its next meeting, the Cascade Board will take action to end or continue activation; or

3) The Cascade Board may authorize activation of Cascade's Emergency Stage.

If SPU activates its Emergency Stage, Cascade anticipates that Section 12.1 (Emergency Events) of the Block Contract would also be triggered. This section permits SPU to curtail supplies to Cascade, on a proportional basis with its retail customers and other wholesale customers. In the event of significant curtailment, Cascade and its Members would need to activate their SMPs in order to manage the situation effectively.

4.4.3 Communication Actions of Emergency Stage

Once the Emergency Stage has been activated by Cascade, Cascade will:

- Inform Cascade Members that they are required to activate their Emergency Stage (or

equivalent actions per each Member's individual SMP). This will not apply to Cascade Members exempted per Section 3.4 of this SMP. Enforcement actions may be needed in the Emergency Stage. Cascade anticipates each Member will enforce restrictions in a manner suitable to the local service area or will work with other local governments having enforcement powers to do so.

- Continue and intensify communication actions from the previous stages, with modifications as appropriate for the Emergency Stage (as determined in consultation with SPU and Cascade Members). This includes, but is not limited to, Cascade's role in supporting effective communications between individual Cascade Members and SPU.

- For Members that have independent supply, request they rely as much as possible on these supplies, to reduce pressure on the Cascade regional supply.

- Alert Members of particular operational problems that may occur with system-wide reduced water consumption, and communicate these to Cascade Members management, operations staff and public affairs staff and on the Cascade website. These could include, for example, taste and odor problems; and reduced pressures in Member distribution systems.

- Assist Cascade Members to define and communicate exemptions for medical facilities and other facilities having key responsibilities for public health and safety.

4.4.5 Operating Actions of Emergency Stage

- Cascade will continue to monitor staffing impacts, training needs and communications strategies and make adjustments where feasible to enhance effectiveness of the regional water shortage response.

- If feasible and applicable, Cascade will make staff resources available to Cascade Members to assist them in the water shortage response. This may include temporary reassignment of Cascade staff; and/or outsourcing of specialized functions or additional staffing resources that could provide assistance to Cascade Members.

- If volunteer services are available and deemed valuable to the water shortage response, and if desired by the Members, Cascade will coordinate volunteers on behalf of its Members.

- If necessary the Board will consider enforcement actions against any Members who do not comply with Emergency Stage actions, as allowed under the Cascade Joint Agreement.

TABLE 1: Triggers for Plan Activation and of Curtailment Stages

TRIGGERS	CASCADE SMP/Stage	MEMBERS
SPU activation plus CEO activation Cascade (Board confirmation); or CEO declaration of emergency (Board confirmation at next meeting); or Board Action	Activation to any of the 4 Stages	
SPU activates to Advisory Stage plus CEO activation (Board confirmation at next meeting); or CEO declaration of emergency (Board confirmation at next meeting); or Board Action	Advisory Stage	Cascade inform and advise Members
SPU activates to Voluntary Stage plus CEO activation (Board confirmation at next meeting); or CEO declaration of emergency (Board confirmation at next meeting); or Board Action	Voluntary Stage	Member compliance required
SPU activates to Mandatory Stage plus Board Action; or CEO declaration of emergency (Board confirmation at next meeting). or Board Action	Mandatory Stage	Member compliance required
SPU activates to Emergency Stage plus Board Action; or CEO declaration of emergency (Board confirmation at next meeting); or Board Action	Emergency Stage	Member compliance required

Table 2: Four Stages of Curtailment

	Advisory	Voluntary	Mandatory	Emergency
Theme of Public Messages from SPU	A shortage may occur soon; get ready.	A shortage has occurred. We are requesting voluntary curtailment to reduce demand by x percent.	A severe shortage has occurred. Mandatory curtailment is necessary and specific uses of water are restricted.	An emergency shortage has occurred. Mandatory curtailment is necessary and public health and safety uses are the priority.
Cascade Communication Actions	• Inform Members they are required to activate their Advisory Stage (see exemptions). • Establish a regular communication mechanism with Members. • Request Cascade Members carry out supply-side management actions. • Participate on SPU's Water Shortage Advisory Group. • Assist Members to acquire and distribute public information materials.	• Inform Members they are required to activate their Voluntary Stage. • Request Cascade Members report to Cascade regarding supply-side management actions. For Members that have independent supply, this may include relying more heavily on these supplies. • Request Cascade Members communicate with their largest customers. • Communicate regularly with Cascade Members. • Communicate with the Washington State Department of Health. • Participate on SPU's Water Shortage Advisory Group. • Assist Cascade Members to acquire and distribute public information materials.	• Inform Cascade Members that they are required to activate their Mandatory Stage, including enforcement as appropriate. • Gather information from SPU on water quality or pressure problems, and communicate these to Members. • Continue communication actions from the Voluntary Stage, with modifications as appropriate for the Mandatory Stage.	• Inform Cascade Members that they are required to activate their Emergency Stage, including enforcement as appropriate. • Continue and intensify communication actions from the Mandatory Stage. • For Members that have independent supply, request they rely as much as possible on these supplies. • Alert Members of particular operational problems that may occur with system-wide reduced water consumption. • Assist Cascade Members to define and communicate exemptions for public health and safety.
Cascade Operating Actions	• Initiate preparation for Voluntary Stage.	• Assess revenue implications remedies. • Initiate preparation for Mandatory Stage.	• Continue operating actions from the Voluntary Stage • Initiate preparation for Emergency Stage. • If necessary consider enforcement actions against any non-complying	• Continue operating actions from Mandatory Stage. • Make staff resources available to Cascade Members. • Coordinate volunteers on behalf of Members.

APPENDIX A

POSSIBLE ADVISORY STAGE WATER CONSERVATION TIPS FOR CUSTOMERS (Adapted from SPU 2006 WSCP)

Conserve Inside

For most households, the vast majority of water is used indoors. Taking conservation actions and installing efficient fixtures help reduce your water use year-round. There are also ways to conserve water in outdoor uses and at work. Below are suggested actions:

- Fix leaking faucets and toilets.
- Wash only full loads in the dishwasher and clothes washer.
- Minimize faucet use when brushing your teeth, shaving and washing dishes.
- Don't pre-rinse dishes unless you need to. Most new dishwashers don't require pre-rinsing.
- Save lukewarm water for watering plants, etc. while you wait for hot water in kitchens and showers.
- If you are buying a new toilet, look for a WaterSense model.
- If you are buying a new washing machine, purchase a high-efficiency model. WashWise rebates may be available for qualified machines.

Conserve Outside

Make the most of the water you will use in the spring and summer:

- Aerate lawns in the spring to better absorb water.
- Mulch planting beds to decrease evaporation.
- Select the right plants for the right place – contact SPU or see our website for information.
- Tune-up and improve your irrigation system- rebates may be available.
- Wash your cars at locations that recycle their water.

Note: For more information on home water conservation tips for inside and out, visit www.savingwater.org or call 684-7283 (684-SAVE)

Conserve at Work

Businesses and institutions can reduce water use and lower utility costs by adopting conservation practices and replacing inefficient equipment or operations.

- Check for leaks.
- Use a broom, instead of a hose, to routinely clean driveways and sidewalks
- Tum off water-using equipment when not in use, including dishwashers, garbage disposals, and food troughs.
- Upgrade equipment efficiency -rebates may be available.
- Increase employee awareness of water conservation.

POSSIBLE VOLUNTARY STAGE CUSTOMER WATER SAVING ACTIONS
(Adapted from SPU 2006 WSCP)

The following voluntary actions are being requested of all customers:

SET A GOAL: Such as use 10% less water
Most customers can easily save 10% by choosing several items from the menu of water saving actions below. If you routinely do outdoor watering, select those actions first. Set a goal to reduce your water use by 10% from the amount you used during the same billing period last year. Most utility bills contain your water consumption for each billing period. Much of the 10% can probably be achieved through conservation actions that are wise to do all the time. If that is not sufficient, then the special curtailment actions listed here can be implemented during the duration of the supply problem.

REDUCE OUTDOOR WATER USE

Conservation Actions:
- **Avoid watering** between 10 AM and 7 PM to reduce evaporation.
- **Stop obvious water waste** such as gutter flooding, sidewalk and street watering, and fix leaks.
- **Never leave a hose running,** always use a shut-off nozzle.
- **Use a broom** rather than a hose or pressure washer to clean sidewalks and driveways.

Curtailment Actions:
- **Reduce lawn watering** (twice a week or less if possible).
- **Let your lawn go dormant.** Customers who choose to not water their lawns should water deeply once each rainless month to keep grass roots alive. To avoid runoff when you water, if the water puddles, cycle your sprinkler on and off until water is absorbed.
- **Refrain from filling** empty pools and hot tubs.
- **Turn off water features** and fountains.
- **Wash vehicles only at car washes that recycle their water.**

REDUCE INDOOR WATER USE

Conservation Actions:
- **Install a water efficient WaterSense toilet.** These toilets have proven to perform well and give long-term water savings. Replacing a frequently used old toilet with a new efficient toilet can save most households in utility bills. Check www.savingwater.org for WaterSense toilet models.
- **Install a high-efficiency clothes washer**. New washers are typically one-third more water efficient than old washers.
- **Wash only full loads in the clothes washer and dishwasher**, or choose an appropriate load-size setting for the number of items in the washer.
- **Turn off the tap** while brushing your teeth, hand-washing dishes or shaving.
- **Fix leaky faucets and toilets**. Put several drops of food coloring in your toilet tank. After 20 minutes, if you have color in the bowl, you have a slow leak that over time can amount to a lot of water.
- **Install an efficient showerhead**. New showerheads work well and use much less water than old high-flow models.
- **Install an efficient faucet aerator**. Replace your older bathroom faucet nozzle (aerator) with one that uses one gallon per minute or less.

Curtailment Actions:
- **Spend one minute less in the shower.** Try to limit showers to five minutes or less.
- **Flush your toilet less often**. Toilet flushing is the largest water use inside the home. As the saying goes, "If it's yellow, let it mellow."

REDUCE WATER USE AT WORK

There are a wide variety of opportunities for businesses and agencies to reduce their water use and operating expenses.

Conservation Actions:

- **Check cooling towers**. Cooling towers - and the ways that they regulate water use – represent real opportunities for improving water efficiency.
- **Check for and fix leaks**. Toilet and urinal leaks are very common. Investigate obvious or suspected leaks.
- **Use a broom**, instead of a hose or pressure washer, to routinely clean driveways and sidewalks.
- Turn off water-using equipment when not in use, including open hoses, dishwashers, garbage disposals, and food troughs.
- **Check air conditioners, refrigerators, and ice machines**. If your company's air conditioners or refrigerators use water-cooled condensers, investigate air-cooled equipment for possible efficiencies. Rebates are available. Visit www.savingwater.org.
- **Install water-efficient toilets, urinals and faucets** in public and employee restrooms. Replacing old toilets, urinals, and faucet aerators with efficient ones can produce substantial savings. Rebates are available. Visit www.savingwater.org.
- **Reuse process water**. Water used in industrial and manufacturing processes should be reused as often as possible. Rebates are available. Visit www.savingwater.org.
- Hospitality businesses can offer guests the option of clean linens each day.
- **Increase employee awareness of water conservation** through management memos or newsletter messages. Install signs that encourage water conservation in restrooms or work areas where water is used. For additional work-related conservation tips, call (206) 343-8505.

Curtailment Actions:

- **Reduce outdoor watering** (twice a week or less if possible). Rebates are available for smart irrigation technologies. Visit www.savingwater.org.
- **Minimize vehicle washing**, defer or use a water recycling car wash.
- **Turn off** decorative water fountains.
- **Serve water only on request** at restaurants. Avoid thawing with running water.

For home water conservation tips, visit www.savingwater.org or call (206) 684-7283 (684-SAVE)

This page intentionally left blank.

Appendix T

Financial Summary Appendix

This page intentionally left blank.

Sammamish Plateau Water
Water & Sewer Rate Model
Summary of Fund Activity

Operating Fund	2018	2019	2020	2021	2022	2023	2024	2025	2026	2027
Water:										
Beginning Balance	$ 13,636,078	$ 14,394,659	$ 10,590,559	$ 9,708,007	$ 9,389,148	$ 9,363,942	$ 8,949,087	$ 8,113,356	$ 7,976,203	$ 8,406,233
Plus: Rate Revenue After Adjustments (Excluding Taxes)	15,548,340	15,445,073	16,232,529	17,060,134	17,876,847	18,732,658	19,629,440	20,569,154	21,553,854	22,585,696
Plus: Other Revenue	1,235,760	1,152,710	1,129,646	1,139,915	1,157,305	1,179,320	1,197,466	1,211,401	1,235,171	1,267,185
Less: Operating Expenses	(4,549,830)	(4,973,570)	(5,187,578)	(5,624,897)	(5,986,759)	(6,370,791)	(6,757,332)	(7,146,832)	(7,555,915)	(7,999,049)
Appropriations from (to) Other Funds:										
General Management Fund	(3,252,397)	(3,769,235)	(3,923,692)	(4,045,612)	(4,187,951)	(4,345,928)	(4,554,177)	(4,727,520)	(4,983,764)	(5,144,717)
Engineering Fund	(372,425)	(405,857)	(425,649)	(446,415)	(468,203)	(491,066)	(515,055)	(540,226)	(566,639)	(599,853)
Debt Service Fund	(1,178,990)	(579,100)	(236,107)	(474,686)	(473,938)	(471,381)	(470,925)	(369,003)	(225,886)	(1,921)
Overdale Debt Service Fund	34,160	34,160	34,160	34,160	34,160	34,160	34,160	34,160	34,160	34,160
Capital Replacement Fund	(5,600,910)	(5,925,500)	(7,069,000)	(7,302,000)	(7,543,000)	(7,792,000)	(8,049,000)	(8,315,000)	(8,589,000)	(8,872,000)
CP Fund	(1,105,127)	(4,782,782)	(1,436,862)	(659,459)	(433,667)	(889,828)	(1,350,308)	(853,288)	(471,951)	(355,057)
Bond Proceeds Account										(79,533)
Ending Balance	$ 14,394,659	$ 10,590,559	$ 9,708,007	$ 9,389,148	$ 9,363,942	$ 8,949,087	$ 8,113,356	$ 7,976,203	$ 8,406,233	$ 9,241,144
Minimum Balance	$ 2,187,432	$ 2,423,216	$ 2,525,158	$ 2,670,486	$ 2,800,821	$ 2,941,945	$ 3,096,384	$ 3,243,259	$ 3,415,736	$ 3,574,812
Minimum Target: Days of Operating Expenses	*90 Days*	*90 Days*	*90 Days*	*90 Days*	*90 Days*	*90 Days*	*90 Days*	*90 Days*	*90 Days*	*90 Days*
Sewer:										
Beginning Balance	$ 8,559,501	$ 10,039,577	$ 10,223,320	$ 10,050,819	$ 9,748,425	$ 9,859,044	$ 9,682,071	$ 9,990,620	$ 10,391,629	$ 10,750,415
Plus: Rate Revenue After Adjustments (Excluding Taxes)	6,650,342	6,986,927	7,358,247	7,749,302	8,081,147	8,427,202	8,788,077	9,164,406	9,556,850	9,966,100
Plus: Other Revenue	9,486,850	9,855,230	10,028,670	10,633,608	10,746,262	11,087,560	11,437,823	11,879,572	12,340,156	12,818,610
Less: Operating Expenses	(9,596,460)	(10,167,550)	(10,795,338)	(11,439,920)	(11,640,214)	(12,021,804)	(12,465,312)	(12,949,578)	(13,503,992)	(14,029,536)
Appropriations from (to) Other Funds:										
General Management Fund	(1,980,268)	(2,255,235)	(2,367,459)	(2,431,843)	(2,523,306)	(2,609,691)	(2,743,086)	(2,838,156)	(3,001,990)	(3,087,906)
Engineering Fund	(372,425)	(402,863)	(422,492)	(443,088)	(464,697)	(487,371)	(511,161)	(536,123)	(562,316)	(589,800)
Debt Service Fund	-	-	(427)	(51,488)	(51,611)	(51,178)	(51,337)	(38,851)	(38,818)	-
Overdale Debt Service Fund	-	-	-	-	-	-	-	-	-	-
Capital Replacement Fund	(2,303,000)	(3,010,100)	(3,553,000)	(3,670,000)	(3,791,000)	(3,916,000)	(4,045,000)	(4,178,000)	(4,316,000)	(4,458,000)
CP Fund	(404,963)	(822,667)	(420,702)	(648,965)	(245,961)	(605,691)	(101,457)	(102,260)	(115,104)	(119,988)
Bond Proceeds Account										
Ending Balance	$ 10,039,577	$ 10,223,320	$ 10,050,819	$ 9,748,425	$ 9,859,044	$ 9,682,071	$ 9,990,620	$ 10,391,629	$ 10,750,415	$ 11,249,894
Minimum Balance	$ 2,997,975	$ 3,213,452	$ 3,404,095	$ 3,585,078	$ 3,661,049	$ 3,782,634	$ 3,931,365	$ 4,080,996	$ 4,265,193	$ 4,423,389
Minimum Target: Days of Operating Expenses	*90 Days*	*90 Days*	*90 Days*	*90 Days*	*90 Days*	*90 Days*	*90 Days*	*90 Days*	*90 Days*	*90 Days*

Engineering Fund	2018	2019	2020	2021	2022	2023	2024	2025	2026	2027
Water:										
Beginning Balance	$ -	$ -	$ -	$ -	$ -	$ -	$ -	$ -	$ -	$ -
Plus: Developer Fee Income	167,100	180,710	189,746	199,233	209,194	219,654	230,637	242,169	254,277	266,991
Plus: Appropriations from Operating Fund	372,425	405,857	425,649	446,415	468,203	491,066	515,055	540,226	566,639	599,853
Plus: Appropriations from CP Fund	56,556	60,130	63,062	66,139	69,367	72,754	76,308	80,038	83,951	88,057
Plus: Appropriations from Capital Replacement Fund	3,172	5,870	6,156	6,457	6,772	7,102	7,449	7,813	8,195	8,596
Plus: Appropriations from General Facilities Charge Fund	36,210	44,128	46,280	48,538	50,907	53,393	56,001	58,738	61,610	64,623
Plus: Appropriations from Local Facilities Charge Fund	1,572	3,755	3,938	4,130	4,331	4,543	4,765	4,998	5,242	-
Less: Water Share of Engineering Expenses	(637,035)	(700,450)	(734,831)	(770,911)	(808,775)	(848,512)	(890,215)	(933,982)	(979,915)	(1,028,121)
Ending Balance	$ -	$ -	$ -	$ -	$ -	$ -	$ -	$ -	$ -	$ -
Sewer:										
Beginning Balance	$ -	$ -	$ -	$ -	$ -	$ -	$ -	$ -	$ -	$ -
Plus: Developer Fee Income	164,660	180,710	189,746	199,233	209,194	219,654	230,637	242,169	254,277	266,991
Plus: Appropriations from Operating Fund	372,425	402,863	422,492	443,088	464,697	487,371	511,161	536,123	562,316	589,800
Plus: Appropriations from CP Fund	10,388	12,970	13,602	14,265	14,961	15,691	16,457	17,260	18,104	18,988
Plus: Appropriations from Capital Replacement Fund	1,327	-	-	-	-	-	-	-	-	-
Plus: Appropriations from General Facilities Charge Fund	1,916	17,776	18,642	19,551	20,504	21,505	22,555	23,656	24,812	26,024
Plus: Appropriations from Local Facilities Charge Fund	25,719	22,831	23,944	25,111	26,336	27,621	28,969	30,384	31,868	33,426
Less: Sewer Share of Engineering Expenses	(576,435)	(637,150)	(668,426)	(701,247)	(735,692)	(771,841)	(809,778)	(849,592)	(891,377)	(935,230)
Ending Balance	$ -	$ -	$ -	$ -	$ -	$ -	$ -	$ -	$ -	$ -

Sammamish Plateau Water
Water & Sewer Rate Model
Summary of Fund Activity

CP Fund	2018	2019	2020	2021	2022	2023	2024	2025	2026	2027
Water:										
Beginning Balance	$ -	$ -	$ -	$ -	$ -	$ -	$ -	$ -	$ -	$ -
Plus: Interest Earnings	-	-	-	-	-	-	-	-	-	-
Plus: NE Sammamish / SP Water Joint Fund Transfer	-	-	-	-	-	-	-	-	-	-
Plus: Appropriation from Operating Fund	1,105,127	4,782,782	1,436,862	659,459	433,667	889,828	1,350,308	853,288	471,951	355,057
Less: Appropriation to Engineering Fund	(56,556)	(60,130)	(63,062)	(66,139)	(69,367)	(72,754)	(76,308)	(80,038)	(83,951)	(88,057)
Less: Capital Project Expenditures	(1,048,571)	(4,722,652)	(1,373,800)	(593,320)	(364,300)	(817,074)	(1,274,000)	(773,250)	(388,000)	(267,000)
Ending Balance	$ -	$ -	$ -	$ -	$ -	$ -	$ -	$ -	$ -	$ -
Sewer:										
Beginning Balance	$ -	$ -	$ -	$ -	$ -	$ -	$ -	$ -	$ -	$ -
Plus: Interest Earnings	-	-	-	-	-	-	-	-	-	-
Plus: Appropriation from Operating Fund	404,963	822,667	420,702	648,965	245,961	605,691	101,457	102,260	115,104	119,988
Less: Appropriation to Engineering Fund	(10,388)	(12,970)	(13,602)	(14,265)	(14,961)	(15,691)	(16,457)	(17,260)	(18,104)	(18,988)
Less: Capital Project Expenditures	(394,575)	(809,697)	(407,100)	(634,700)	(231,000)	(590,000)	(85,000)	(85,000)	(97,000)	(101,000)
Ending Balance	$ -	$ -	$ -	$ -	$ -	$ -	$ -	$ -	$ -	$ -

Capital Replacement Fund	2018	2019	2020	2021	2022	2023	2024	2025	2026	2027
Water:										
Beginning Balance	$ 20,153,903	$ 26,032,871	$ 31,895,374	$ 39,356,910	$ 46,759,415	$ 54,880,136	$ 63,351,035	$ 72,184,474	$ 81,393,966	$ 90,992,195
Plus: Interest Earnings	340,180	430,150	398,692	491,961	584,493	686,002	791,888	902,306	1,017,425	1,137,402
Plus: Appropriations from Operating Fund	5,600,910	5,925,500	7,069,000	7,302,000	7,543,000	7,792,000	8,049,000	8,315,000	8,589,000	8,872,000
Plus: Appropriations from Local Facilities Charge Fund	-	-	-	-	-	-	-	-	-	-
Plus: Appropriations from Debt Service Fund	-	-	-	-	-	-	-	-	-	-
Less: Capital Project Expenditures	(58,950)	(487,277)	-	(385,000)	-	-	-	-	-	-
Less: Appropriation to Engineering Fund	(3,172)	(5,870)	(6,156)	(6,457)	(6,772)	(7,102)	(7,449)	(7,813)	(8,195)	(8,596)
Ending Balance	$ 26,032,871	$ 31,895,374	$ 39,356,910	$ 46,759,415	$ 54,880,136	$ 63,351,035	$ 72,184,474	$ 81,393,966	$ 90,992,195	$ 100,993,002
Minimum Balance										
Sewer:										
Beginning Balance	$ 8,732,198	$ 11,132,851	$ 14,331,181	$ 18,063,321	$ 21,959,112	$ 26,024,601	$ 30,265,909	$ 34,689,233	$ 39,300,848	$ 44,108,109
Plus: Interest Earnings	149,380	188,230	179,140	225,792	274,489	325,308	378,324	433,615	491,261	551,351
Plus: Appropriations from Operating Fund	2,303,000	3,010,100	3,553,000	3,670,000	3,791,000	3,916,000	4,045,000	4,178,000	4,316,000	4,458,000
Plus: Appropriations from Local Facilities Charge Fund	-	-	-	-	-	-	-	-	-	-
Plus: Appropriations from Debt Service Fund	-	-	-	-	-	-	-	-	-	988
Less: Capital Project Expenditures	(50,400)	-	-	-	-	-	-	-	-	-
Less: Appropriation to Engineering Fund	(1,327)	-	-	-	-	-	-	-	-	-
Ending Balance	$ 11,132,851	$ 14,331,181	$ 18,063,321	$ 21,959,112	$ 26,024,601	$ 30,265,909	$ 34,689,233	$ 39,300,848	$ 44,108,109	$ 49,118,448
Minimum Balance										

Sammamish Plateau Water
Water & Sewer Rate Model
Summary of Fund Activity

General Facilities Charge Fund	2018	2019	2020	2021	2022	2023	2024	2025	2026	2027
Water:										
Beginning Balance	$ 7,585,138	$ 6,748,487	$ 4,122,692	$ 5,100,708	$ 5,557,354	$ 6,710,416	$ 2,084,530	$ 2,381,219	$ 3,159,652	$ 4,267,823
Plus: Interest Earnings	116,970	70,790	51,534	63,759	69,467	83,880	26,057	29,765	39,496	53,348
Plus: GFC Revenues	588,050	175,000	1,376,757	1,394,655	1,086,758	1,097,625	1,108,602	1,119,688	1,130,885	1,142,193
Plus: Appropriation from (to) Local Facilities Charge Fund										
Plus: Appropriation from Overdale Debt Service Fund	109,080	109,080	109,080	109,080	109,080	109,080	109,080	109,080	109,080	109,080
Less: Appropriation to Debt Service Fund	(926,000)	(327,130)	(60,314)	(60,809)	(61,336)	(60,499)	(60,938)	(60,662)	(48,140)	(48,328)
Less: Use of GFCs for Capital Projects	(688,541)	(2,609,406)	(452,760)	(1,001,500)	-	(5,802,580)	(830,110)	(360,700)	(61,540)	(1,947,040)
Less: Appropriation to Engineering Fund	(36,210)	(44,128)	(46,280)	(48,538)	(50,907)	(53,393)	(56,001)	(58,738)	(61,610)	(64,623)
Ending Balance	$ 6,748,487	$ 4,122,692	$ 5,100,708	$ 5,557,354	$ 6,710,416	$ 2,084,530	$ 2,381,219	$ 3,159,652	$ 4,267,823	$ 3,512,453
Minimum Balance										
Sewer:										
Beginning Balance	$ 3,822,407	$ 3,884,570	$ 2,936,254	$ 3,907,249	$ 4,638,270	$ 5,151,023	$ 4,799,888	$ 5,323,476	$ 5,870,369	$ 6,428,402
Plus: Interest Earnings	60,570	46,890	36,703	48,841	57,978	64,388	59,999	66,543	73,380	80,355
Plus: GFC Revenues	567,290	175,000	1,012,861	1,033,119	526,890	532,159	537,481	542,856	548,284	553,767
Plus: Appropriation from (to) Local Facilities Charge Fund										
Plus: Appropriation from Overdale Debt Service Fund	-	-	-	-	-	-	-	-	-	-
Less: Appropriation to Debt Service Fund	(491,000)	(42,930)	(427)	(51,488)	(51,611)	(51,178)	(51,337)	(38,851)	(38,818)	-
Less: Use of GFCs for Capital Projects	(72,781)	(1,109,500)	(59,500)	(279,900)	-	(875,000)	-	-	-	-
Less: Appropriation to Engineering Fund	(1,916)	(17,776)	(18,642)	(19,551)	(20,504)	(21,505)	(22,555)	(23,656)	(24,812)	(26,024)
Ending Balance	$ 3,884,570	$ 2,936,254	$ 3,907,249	$ 4,638,270	$ 5,151,023	$ 4,799,888	$ 5,323,476	$ 5,870,369	$ 6,428,402	$ 7,036,500
Minimum Balance										

Local Facilities Charge Fund	2018	2019	2020	2021	2022	2023	2024	2025	2026	2027
Water:										
Beginning Balance	$ 2,438,486	$ 2,713,435	$ 2,373,250	$ 1,874,738	$ 1,974,042	$ 2,074,386	$ 1,948,353	$ 983,052	$ 562,793	$ 344,126
Plus: Interest Earnings	38,230	37,050	29,666	23,434	24,676	25,930	24,354	12,288	7,035	4,302
Plus: LFC Revenues	269,560	202,170	80,000	80,000	80,000	80,000	80,000	80,000	80,000	80,000
Less: Appropriation to Debt Service Fund										
Less: Use of LFCs for Capital Projects	(31,270)	(575,650)	(604,240)	-	-	(227,420)	(1,064,890)	(507,550)	(300,460)	(428,427)
Less: Appropriation to Engineering Fund	(1,572)	(3,755)	(3,938)	(4,130)	(4,331)	(4,543)	(4,765)	(4,998)	(5,242)	-
Less: Use for Capital Reinvestment Funding										
Appropriation from (to) General Facilities Charge Fund	-	-	-	-	-	-	-	-	-	-
Ending Balance	$ 2,713,435	$ 2,373,250	$ 1,874,738	$ 1,974,042	$ 2,074,386	$ 1,948,353	$ 983,052	$ 562,793	$ 344,126	$ -
Minimum Balance										
Sewer:										
Beginning Balance	$ 4,571,097	$ 4,069,630	$ 3,076,822	$ 3,291,338	$ 3,507,369	$ 3,724,875	$ 3,943,815	$ 4,164,144	$ 4,385,812	$ 4,608,767
Plus: Interest Earnings	74,540	50,080	38,460	41,142	43,842	46,561	49,298	52,052	54,823	57,610
Plus: LFC Revenues	426,630	404,980	200,000	200,000	200,000	200,000	200,000	200,000	200,000	200,000
Less: Appropriation to Debt Service Fund										
Less: Use of LFCs for Capital Projects	(976,917)	(1,425,038)	-	-	-	-	-	-	-	-
Less: Appropriation to Engineering Fund	(25,719)	(22,831)	(23,944)	(25,111)	(26,336)	(27,621)	(28,969)	(30,384)	(31,868)	(33,426)
Less: Use for Capital Reinvestment Funding										
Appropriation from (to) General Facilities Charge Fund	-	-	-	-	-	-	-	-	-	-
Ending Balance	$ 4,069,630	$ 3,076,822	$ 3,291,338	$ 3,507,369	$ 3,724,875	$ 3,943,815	$ 4,164,144	$ 4,385,812	$ 4,608,767	$ 4,832,951
Minimum Balance										

Sammamish Plateau Water
Water & Sewer Rate Model
Summary of Fund Activity

Bond Proceeds Account	2018	2019	2020	2021	2022	2023	2024	2025	2026	2027
Water:										
Beginning Balance	$ -	$ -	$ -	$ -	$ -	$ -	$ -	$ -	$ -	$ -
Plus: Interest Earnings	-	-	-	-	-	-	-	-	-	-
Plus: Existing Debt Proceeds										
Plus: Net Proceeds from New Public Works Trust Fund Loans	-	-	-	-	-	-	-	-	-	-
Plus: Net Proceeds from New Revenue Bonds	-	-	-	-	-	-	-	-	-	-
Plus: Appropriation from Operating Fund	-	-	-	-	-	-	-	-	-	79,533
Less: Use of Debt Proceeds for Capital Projects	-	-	-	-	-	-	-	-	-	(79,533)
Ending Balance	$ -	$ -	$ -	$ -	$ -	$ -	$ -	$ -	$ -	$ -
Sewer:										
Beginning Balance	$ -	$ -	$ -	$ -	$ -	$ -	$ -	$ -	$ -	$ -
Plus: Interest Earnings	-	-	-	-	-	-	-	-	-	-
Plus: Existing Debt Proceeds										
Plus: Net Proceeds from New Public Works Trust Fund Loans	-	-	-	-	-	-	-	-	-	-
Plus: Net Proceeds from New Revenue Bonds	-	-	-	-	-	-	-	-	-	-
Plus: Appropriation from Operating Fund	-	-	-	-	-	-	-	-	-	-
Less: Use of Debt Proceeds for Capital Projects	-	-	-	-	-	-	-	-	-	-
Ending Balance	$ -	$ -	$ -	$ -	$ -	$ -	$ -	$ -	$ -	$ -

Debt Service Fund	2018	2019	2020	2021	2022	2023	2024	2025	2026	2027
Water:										
Beginning Balance	$ 1,855,030	$ 1,797,056	$ 537,011	$ 299,830	$ 299,830	$ 297,536	$ 297,536	$ 295,945	$ 224,849	$ 224,849
Plus: Interest Earnings	-	-	6,713	3,748	3,748	3,719	3,719	3,699	2,811	2,811
Plus: Assessment Income	134,130	130,320	130,320	130,320	130,320	130,320	130,320	130,320	130,320	130,320
Plus: Additions to Bond Reserve	-	-	-	-	-	-	-	-	-	-
Plus: Appropriation from Operating Fund	1,178,990	579,100	236,107	474,686	473,938	471,381	470,925	369,003	225,886	1,921
Plus: Appropriation from General Facilities Charge Fund	926,000	327,130	60,314	60,809	61,336	60,499	60,938	60,662	48,140	48,328
Plus: Appropriation from Local Facilities Charge Fund	-	-	-	-	-	-	-	-	-	-
Less: Appropriation to Overdale Debt Service Fund	(183,380)	(183,380)	(183,380)	(183,380)	(183,380)	(183,380)	(183,380)	(183,380)	(183,380)	(183,380)
Less: Appropriation to Capital Replacement Fund				-						
Less: Debt Service Principal	(1,723,813)	(1,744,654)	(233,100)	(240,500)	(251,600)	(255,300)	(266,400)	(273,800)	(210,900)	(218,300)
Less: Debt Service Interest	(148,435)	(128,505)	(63,881)	(56,333)	(48,230)	(39,738)	(31,136)	(22,145)	(12,876)	(6,549)
Less: Public Works Trust Fund Loan	(241,465)	(240,057)	(190,275)	(189,350)	(188,426)	(187,501)	(186,577)	(155,455)	-	-
Ending Balance	$ 1,797,056	$ 537,011	$ 299,830	$ 299,830	$ 297,536	$ 297,536	$ 295,945	$ 224,849	$ 224,849	$ -
Sewer:										
Beginning Balance	$ 1,993,620	$ 1,334,064	$ 206,257	$ 105,346	$ 105,346	$ 104,540	$ 104,540	$ 103,981	$ 79,001	$ 79,001
Plus: Interest Earnings	-	-	2,578	1,317	1,317	1,307	1,307	1,300	988	988
Plus: Assessment Income	106,420	88,880	-	-	-	-	-	-	-	-
Plus: Additions to Bond Reserve	-	-	-	-	-	-	-	-	-	-
Plus: Appropriation from Operating Fund			427	51,488	51,611	51,178	51,337	38,851	38,818	-
Plus: Appropriation from General Facilities Charge Fund	491,000	42,930	427	51,488	51,611	51,178	51,337	38,851	38,818	-
Plus: Appropriation from Local Facilities Charge Fund	-	-	-	-	-	-	-	-	-	-
Less: Appropriation to Overdale Debt Service Fund										
Less: Appropriation to Capital Replacement Fund										(988)
Less: Debt Service Principal	(1,171,187)	(1,185,346)	(81,900)	(84,500)	(88,400)	(89,700)	(93,600)	(96,200)	(74,100)	(76,700)
Less: Debt Service Interest	(85,790)	(74,270)	(22,445)	(19,793)	(16,946)	(13,962)	(10,940)	(7,781)	(4,524)	(2,301)
Less: Public Works Trust Fund Loan	-	-	-	-	-	-	-	-	-	-
Ending Balance	$ 1,334,064	$ 206,257	$ 105,346	$ 105,346	$ 104,540	$ 104,540	$ 103,981	$ 79,001	$ 79,001	$ -
Combined Ending Balance	$ 3,131,120	$ 743,268	$ 405,175	$ 405,175	$ 402,075	$ 402,075	$ 399,925	$ 303,850	$ 303,850	$ -
Minimum Balance										
Water	$ 1,873,158	$ 299,830	$ 299,830	$ 299,830	$ 297,536	$ 297,536	$ 295,945	$ 224,849	$ 224,849	$ -
Sewer	1,259,617	105,346	105,346	105,346	104,540	104,540	103,981	79,001	79,001	-
Total	$ 3,132,775	$ 405,175	$ 405,175	$ 405,175	$ 402,075	$ 402,075	$ 399,925	$ 303,850	$ 303,850	$ -

Sammamish Plateau Water
Water & Sewer Rate Model
Summary of Fund Activity

Overdale Debt Service Fund	2018	2019	2020	2021	2022	2023	2024	2025	2026	2027
Water:										
Beginning Balance	$ 141,770	$ 139,282	$ 137,170	$ 135,437	$ 134,080	$ 133,101	$ 132,498	$ 132,273	$ 132,426	$ 132,955
Plus: DWSRF Loan Reimbursement	-									
Plus: Appropriation from Debt Service Fund	183,380	183,380	183,380	183,380	183,380	183,380	183,380	183,380	183,380	183,380
Less: Debt Service Payments	(42,628)	(42,251)	(41,874)	(41,497)	(41,119)	(40,742)	(40,365)	(39,988)	(39,610)	(39,233)
Less: Appropriation to General Facilities Charge Fund	(109,080)	(109,080)	(109,080)	(109,080)	(109,080)	(109,080)	(109,080)	(109,080)	(109,080)	(109,080)
Less: Appropriation to Operating Fund	(34,160)	(34,160)	(34,160)	(34,160)	(34,160)	(34,160)	(34,160)	(34,160)	(34,160)	(34,160)
Ending Balance	$ 139,282	$ 137,170	$ 135,437	$ 134,080	$ 133,101	$ 132,498	$ 132,273	$ 132,426	$ 132,955	$ 133,862
Minimum Balance										
Sewer:										
Beginning Balance	$ -	$ -	$ -	$ -	$ -	$ -	$ -	$ -	$ -	$ -
Plus: DWSRF Loan Reimbursement										
Plus: Appropriation from Debt Service Fund										
Less: DWSRF Loan Payments	-	-	-	-	-	-	-	-	-	-
Less: Appropriation to General Facilities Charge Fund										
Less: Appropriation to Operating Fund										
Ending Balance	$ -	$ -	$ -	$ -	$ -	$ -	$ -	$ -	$ -	$ -
Minimum Balance										

All Funds	2018	2019	2020	2021	2022	2023	2024	2025	2026	2027
Water:										
Beginning Balance	$ 45,810,405	$ 51,825,789	$ 49,656,056	$ 56,475,629	$ 64,113,869	$ 73,459,516	$ 76,763,039	$ 84,090,319	$ 93,449,889	$ 104,368,181
Plus: Inflows	27,843,983	26,700,927	24,170,670	23,842,086	23,791,650	24,387,439	24,522,776	24,356,173	24,871,539	26,078,002
Less: Outflows	(14,228,291)	(23,711,773)	(13,368,748)	(12,673,662)	(11,140,591)	(18,388,055)	(15,501,062)	(13,683,255)	(12,380,535)	(14,458,792)
Ending Balance	$ 59,426,097	$ 54,814,943	$ 60,457,979	$ 67,644,053	$ 76,764,928	$ 79,458,900	$ 85,784,752	$ 94,763,237	$ 105,940,894	$ 115,987,391
Net Change	$ 13,615,692	$ 2,989,154	$ 10,801,922	$ 11,168,424	$ 12,651,059	$ 5,999,384	$ 9,021,714	$ 10,672,918	$ 12,491,005	$ 11,619,210
Sewer:										
Beginning Balance	$ 27,678,823	$ 30,460,693	$ 30,773,834	$ 35,418,073	$ 39,958,522	$ 44,864,083	$ 48,796,223	$ 54,271,453	$ 60,027,658	$ 65,974,693
Plus: Inflows	21,297,419	22,309,064	23,499,642	25,056,307	24,807,801	26,080,371	26,511,217	27,547,898	28,665,858	29,742,986
Less: Outflows	(18,515,549)	(21,995,923)	(18,855,403)	(20,515,858)	(19,902,240)	(22,148,231)	(21,035,987)	(21,791,692)	(22,718,823)	(23,479,887)
Ending Balance	$ 30,460,693	$ 30,773,834	$ 35,418,073	$ 39,958,522	$ 44,864,083	$ 48,796,223	$ 54,271,453	$ 60,027,658	$ 65,974,693	$ 72,237,793
Net Change	$ 2,781,870	$ 313,142	$ 4,644,239	$ 4,540,449	$ 4,905,561	$ 3,932,140	$ 5,475,230	$ 5,756,205	$ 5,947,035	$ 6,263,099
Total Beginning Balance	$ 73,489,228	$ 82,286,482	$ 80,429,891	$ 91,893,702	$ 104,072,390	$ 118,323,599	$ 125,559,261	$ 138,361,772	$ 153,477,547	$ 170,342,874
Total Ending Balance	$ 89,886,790	$ 85,588,777	$ 95,876,052	$ 107,602,575	$ 121,629,010	$ 128,255,123	$ 140,056,205	$ 154,790,896	$ 171,915,587	$ 188,225,184
Net Change In Total Balance	$ 16,397,562	$ 3,302,296	$ 15,446,161	$ 15,708,873	$ 17,556,620	$ 9,931,524	$ 14,496,944	$ 16,429,123	$ 18,438,040	$ 17,882,310

Sammamish Plateau Water

Sammamish Plateau Water
Water & Sewer Rate Model
Assumptions

Economic & Financial Assumptions	2018	2019	2020	2021	2022	2023	2024	2025	2026	2027
Escalators:										
General Cost Inflation		3.00%	3.00%	3.00%	3.00%	3.00%	3.00%	3.00%	3.00%	3.00%
Labor Cost Inflation		5.00%	5.00%	5.00%	5.00%	5.00%	5.00%	5.00%	5.00%	5.00%
Capital Cost Inflation		3.30%	3.30%	3.30%	3.30%	3.30%	3.30%	3.30%	3.30%	3.30%
Water Customers - Single-Family Residential		1.30%	1.30%	1.30%	1.00%	1.00%	1.00%	1.00%	1.00%	1.00%
Water Customers - Multi-Family Residential		1.30%	1.30%	1.30%	1.00%	1.00%	1.00%	1.00%	1.00%	1.00%
Water Customers - Non-Residential		1.30%	1.30%	1.30%	1.00%	1.00%	1.00%	1.00%	1.00%	1.00%
Water Customers - Irrigation With Audit		1.30%	1.30%	1.30%	1.00%	1.00%	1.00%	1.00%	1.00%	1.00%
Water Customers - Irrigation Without Audit		1.30%	1.30%	1.30%	1.00%	1.00%	1.00%	1.00%	1.00%	1.00%
Aggregate Water Customer Growth		1.30%	1.30%	1.30%	1.00%	1.00%	1.00%	1.00%	1.00%	1.00%
Water Demand - Single-Family Residential		1.30%	1.30%	1.30%	1.00%	1.00%	1.00%	1.00%	1.00%	1.00%
Water Demand - Multi-Family Residential		1.30%	1.30%	1.30%	1.00%	1.00%	1.00%	1.00%	1.00%	1.00%
Water Demand - Non-Residential		1.30%	1.30%	1.30%	1.00%	1.00%	1.00%	1.00%	1.00%	1.00%
Water Demand - Irrigation With Audit		1.30%	1.30%	1.30%	1.00%	1.00%	1.00%	1.00%	1.00%	1.00%
Water Demand - Irrigation Without Audit		1.30%	1.30%	1.30%	1.00%	1.00%	1.00%	1.00%	1.00%	1.00%
Aggregate Water Demand Growth		1.30%	1.30%	1.30%	1.00%	1.00%	1.00%	1.00%	1.00%	1.00%
Aggregate Water Demand Growth + Inflation		4.30%	4.30%	4.30%	4.00%	4.00%	4.00%	4.00%	4.00%	4.00%
Sewer Customers - Single-Family Residential		2.00%	2.00%	2.00%	1.00%	1.00%	1.00%	1.00%	1.00%	1.00%
Sewer Customers - Multi-Family Residential		2.00%	2.00%	2.00%	1.00%	1.00%	1.00%	1.00%	1.00%	1.00%
Sewer Customers - Non-Residential		2.00%	2.00%	2.00%	1.00%	1.00%	1.00%	1.00%	1.00%	1.00%
Sewer ERU Growth		2.00%	2.00%	2.00%	1.00%	1.00%	1.00%	1.00%	1.00%	1.00%
Sewer Flow - Single-Family Residential		2.00%	2.00%	2.00%	1.00%	1.00%	1.00%	1.00%	1.00%	1.00%
Sewer Flow - Multi-Family Residential		2.00%	2.00%	2.00%	1.00%	1.00%	1.00%	1.00%	1.00%	1.00%
Sewer Flow - Non-Residential		2.00%	2.00%	2.00%	1.00%	1.00%	1.00%	1.00%	1.00%	1.00%
Cascade Water Costs		8.46%	3.20%	16.05%	10.46%	9.57%	9.07%	7.62%	7.97%	7.74%
Metro Treatment Costs		2.51%	0.00%	4.50%	0.00%	2.28%	2.29%	3.00%	3.00%	3.00%
Metro Inc. + ERU Growth		4.51%	2.00%	6.50%	1.00%	3.28%	3.29%	4.00%	4.00%	4.00%
Metro Inc. + Non-SFR Demand Growth		4.51%	2.00%	6.50%	1.00%	3.28%	3.29%	4.00%	4.00%	4.00%
No Escalation		0.00%	0.00%	0.00%	0.00%	0.00%	0.00%	0.00%	0.00%	0.00%
Wheeling Charge Increases		0.00%	6.30%	4.30%	4.00%	4.00%	4.00%	4.00%	4.00%	4.00%
[Other Escalator #1]										
[Other Escalator #2]										
[Other Escalator #3]										
[Other Escalator #4]										
Other Assumptions:										
State Excise Tax Rate - Water	5.029%	5.029%	5.029%	5.029%	5.029%	5.029%	5.029%	5.029%	5.029%	5.029%
State Excise Tax Rate - Sewer	3.852%	3.852%	3.852%	3.852%	3.852%	3.852%	3.852%	3.852%	3.852%	3.852%
Transmission Share of Sewer Revenue	53.29%	53.29%	53.29%	53.29%	53.29%	53.29%	53.29%	53.29%	53.29%	53.29%
Effective Sewer Excise Tax Rate	2.599%	2.599%	2.599%	2.599%	2.599%	2.599%	2.599%	2.599%	2.599%	2.599%
B&O Tax Rate	1.500%	1.500%	1.500%	1.500%	1.500%	1.500%	1.500%	1.500%	1.500%	1.500%
Fund Interest Earnings Rate	1.25%	1.25%	1.25%	1.25%	1.25%	1.25%	1.25%	1.25%	1.25%	1.25%

Debt Financing Assumptions	2018	2019	2020	2021	2022	2023	2024	2025	2026	2027
Revenue Bonds										
Interest Rate	4.50%	4.50%	4.50%	4.50%	4.50%	4.50%	4.50%	4.50%	4.50%	4.50%
Repayment Term	20 Years	20 Years	20 Years	20 Years	20 Years	20 Years	20 Years	20 Years	20 Years	20 Years
Principal Deferral (Interest-Only) Period	0 Years	0 Years	0 Years	0 Years	0 Years	0 Years	0 Years	0 Years	0 Years	0 Years
Issuance Cost (% of Amount Issued)	1.00%	1.00%	1.00%	1.00%	1.00%	1.00%	1.00%	1.00%	1.00%	1.00%
Reserve Requirement (% of Amount Issued)	7.69%	7.69%	7.69%	7.69%	7.69%	7.69%	7.69%	7.69%	7.69%	7.69%
Required Coverage Ratio	1.50	1.50	1.50	1.50	1.50	1.50	1.50	1.50	1.50	1.50
Public Works Trust Fund Loans										
Interest Rate	0.50%	0.50%	0.50%	0.50%	0.50%	0.50%	0.50%	0.50%	0.50%	0.50%
Repayment Term	20 Years	20 Years	20 Years	20 Years	20 Years	20 Years	20 Years	20 Years	20 Years	20 Years

Sammamish Plateau Water
Water & Sewer Rate Model
Revenue Forecast

Summary of Revenue Projections	2018	2019	2020	2021	2022	2023	2024	2025	2026	2027
Water										
Rate Revenue From Base Charges	$ 7,612,484	$ 7,679,312	$ 7,779,100	$ 7,880,185	$ 7,958,954	$ 8,038,511	$ 8,118,863	$ 8,200,018	$ 8,281,985	$ 8,364,772
Rate Revenue From Consumption Charges	7,935,857	7,207,506	7,301,200	7,396,113	7,470,071	7,544,770	7,620,215	7,696,415	7,773,377	7,851,108
Other Operating Revenue	943,840	946,440	966,854	988,155	1,009,531	1,031,861	1,055,193	1,079,575	1,105,058	1,131,697
Other Revenue	291,920	206,270	162,792	151,760	147,774	147,459	142,274	131,827	130,113	135,488
Debt Service Revenue	134,130	130,320	137,033	134,068	134,068	134,039	134,039	134,019	133,131	133,131
Capital Revenue	1,520,090	1,095,870	2,126,394	2,253,042	2,054,587	2,193,091	2,261,538	2,386,216	2,529,117	2,684,236
Total	**$ 18,438,320**	**$ 17,265,718**	**$ 18,473,373**	**$ 18,803,323**	**$ 18,774,986**	**$ 19,089,731**	**$ 19,332,121**	**$ 19,628,070**	**$ 19,952,780**	**$ 20,300,432**
Sewer										
Rate Revenue From Base Charges	$ 6,122,096	$ 6,228,175	$ 6,352,706	$ 6,479,727	$ 6,544,508	$ 6,609,936	$ 6,676,019	$ 6,742,763	$ 6,810,174	$ 6,878,259
Rate Revenue From Consumption Charges	528,247	538,824	549,601	560,593	566,199	571,861	577,579	583,355	589,189	595,081
Other Operating Revenue	9,316,970	9,704,800	9,900,878	10,507,973	10,624,406	10,964,322	11,316,798	11,754,689	12,210,261	12,684,230
Other Revenue	169,880	150,430	127,792	125,635	121,855	123,238	121,026	124,883	129,895	134,380
Debt Service Revenue	106,420	88,880	2,578	1,317	1,317	1,307	1,307	1,300	988	988
Capital Revenue	1,443,070	1,045,890	1,882,498	2,011,506	1,614,720	1,747,625	1,810,417	1,929,384	2,066,517	2,215,810
Total	**$ 17,686,682**	**$ 17,757,000**	**$ 18,816,053**	**$ 19,686,750**	**$ 19,473,005**	**$ 20,018,289**	**$ 20,503,145**	**$ 21,136,373**	**$ 21,807,022**	**$ 22,508,747**

Water Revenue Projections				2018	2019	2020	2021	2022	2023	2024	2025	2026	2027
Service Revenue													
Account	Description	Escalator	Revenue Type										
	Single-Family Base Rate Revenue	Water Customers - Single-Family Residential	Base	$ 6,032,850	$ 6,111,280	$ 6,190,727	$ 6,271,206	$ 6,333,918	$ 6,397,257	$ 6,461,230	$ 6,525,842	$ 6,591,101	$ 6,657,012
	Single-Family Consumption Rate Revenue	Water Demand - Single-Family Residential	Consumption	4,919,070	4,564,800	4,624,142	4,684,256	4,731,099	4,778,410	4,826,194	4,874,456	4,923,200	4,972,432
	Multi-Family Base Rate Revenue	Water Customers - Multi-Family Residential	Base	1,147,420	1,162,340	1,177,450	1,192,757	1,204,685	1,216,732	1,228,899	1,241,188	1,253,600	1,266,136
	Multi-Family Consumption Rate Revenue	Water Demand - Multi-Family Residential	Consumption	487,740	544,620	551,700	558,872	564,461	570,105	575,807	581,565	587,380	593,254
	Commercial Base Rate Revenue	Water Customers - Non-Residential	Base	230,770	233,770	236,809	239,888	242,286	244,709	247,156	249,628	252,124	254,645
	Commercial Consumption Rate Revenue	Water Demand - Non-Residential	Consumption	201,730	214,790	217,582	220,411	222,615	224,841	227,090	229,360	231,654	233,971
	Industrial Base Rate Revenue	Water Customers - Non-Residential	Base	4,440	4,500	4,559	4,618	4,664	4,711	4,758	4,805	4,853	4,902
	Industrial Consumption Rate Revenue	Water Demand - Non-Residential	Consumption	3,550	8,240	8,347	8,456	8,540	8,626	8,712	8,799	8,887	8,976
	Public Institution Base Rate Revenue	Water Customers - Non-Residential	Base	175,630	177,910	180,223	182,566	184,391	186,235	188,098	189,979	191,878	193,797
	Public Institution Consumption Rate Revenue	Water Demand - Non-Residential	Consumption	75,300	75,620	76,603	77,599	78,375	79,159	79,950	80,750	81,557	82,373
	Irrigation w/Audit Base Rate Revenue	Water Customers - Irrigation With Audit	Base	38,650	39,150	39,659	40,175	40,576	40,982	41,392	41,806	42,224	42,646
	Irrigation w/Audit Consumption Rate Revenue	Water Demand - Irrigation With Audit	Consumption	101,140	170,280	172,494	174,736	176,483	178,248	180,031	181,831	183,649	185,486
	Irrigation w/o Audit Base Rate Revenue	Water Customers - Irrigation Without Audit	Base	363,550	368,280	373,068	377,918	381,697	385,514	389,369	393,262	397,195	401,167
	Irrigation w/o Audit Consumption Rate Revenue	Water Demand - Irrigation Without Audit	Consumption	2,432,880	1,900,890	1,925,602	1,950,634	1,970,141	1,989,842	2,009,741	2,029,838	2,050,136	2,070,638
	Fire Flow Base Rate Revenue	No Escalation	Base	2,720	2,720	2,720	2,720	2,720	2,720	2,720	2,720	2,720	2,720
	Wholesale Base Rate Revenue	No Escalation	Base	760	760	760	760	760	760	760	760	760	760
	Wholesale Consumption Rate Revenue	No Escalation	Consumption	490	250	250	250	250	250	250	250	250	250
	Low-Income Discount/Rebate Program	[Calculated]	Base	(2,500)	(36,330)	(36,802)	(37,281)	(37,654)	(38,030)	(38,410)	(38,794)	(39,182)	(39,574)
	Less: Excise Taxes on Base Charges	[Calculated]	Base	(381,806)	(385,068)	(390,072)	(395,140)	(399,090)	(403,079)	(407,108)	(411,177)	(415,287)	(419,439)
	Less: Excise Taxes on Consumption Charges	[Calculated]	Consumption	(286,043)	(271,984)	(275,520)	(279,102)	(281,893)	(284,711)	(287,558)	(290,434)	(293,338)	(296,271)
Subtotal: Service Revenue				**$ 15,548,340**	**$ 14,886,818**	**$ 15,080,300**	**$ 15,276,298**	**$ 15,429,026**	**$ 15,583,280**	**$ 15,739,078**	**$ 15,896,433**	**$ 16,055,362**	**$ 16,215,880**
Adopted / Baseline Rate Adjustments													
Base													
Consumption													

Sammamish Plateau Water
Water & Sewer Rate Model
Revenue Forecast

Water Revenue Projections (Continued)			2018	2019	2020	2021	2022	2023	2024	2025	2026	2027
Other Operating Revenue												
Account	Description	Escalator										
	Meter Charges	No Escalation	$ 268,830	$ 228,510	$ 228,510	$ 228,510	$ 228,510	$ 228,510	$ 228,510	$ 228,510	$ 228,510	$ 228,510
	Street Light Revenue	Aggregate Water Customer Growth	102,500	107,630	109,029	110,447	111,551	112,667	113,793	114,931	116,080	117,241
	Rental Income	No Escalation	24,080	24,950	24,950	24,950	24,950	24,950	24,950	24,950	24,950	24,950
	Late Charges	Aggregate Water Customer Growth	77,410	78,420	79,439	80,472	81,277	82,090	82,911	83,740	84,577	85,423
	Penalties and Interest	Aggregate Water Customer Growth	79,460	91,760	92,953	94,161	95,103	96,054	97,014	97,985	98,964	99,954
	Availability Certificate	No Escalation	2,680	3,490	3,490	3,490	3,490	3,490	3,490	3,490	3,490	3,490
	Unmetered Water Sales - Flushing	No Escalation	27,820	27,820	27,820	27,820	27,820	27,820	27,820	27,820	27,820	27,820
	ROW Permits	No Escalation	1,610	1,370	1,370	1,370	1,370	1,370	1,370	1,370	1,370	1,370
	Developer Revenue	Labor Cost Inflation	14,930	8,960	9,408	9,878	10,372	10,891	11,435	12,007	12,608	13,238
	Overhead Revenue	Labor Cost Inflation	302,460	327,090	343,445	360,617	378,648	397,580	417,459	438,332	460,248	483,261
	Miscellaneous Revenue	No Escalation	42,060	46,440	46,440	46,440	46,440	46,440	46,440	46,440	46,440	46,440
Subtotal: Other Operating Revenue			**$ 943,840**	**$ 946,440**	**$ 966,854**	**$ 988,155**	**$ 1,009,531**	**$ 1,031,861**	**$ 1,055,193**	**$ 1,079,575**	**$ 1,105,058**	**$ 1,131,697**
Other Revenue												
Account	Description	Escalator										
	Investment Income	[Calculated]	$ 254,460	$ 147,860	$ 132,382	$ 121,350	$ 117,364	$ 117,049	$ 111,864	$ 101,417	$ 99,703	$ 105,078
	Billable Services	No Escalation	28,960	30,410	30,410	30,410	30,410	30,410	30,410	30,410	30,410	30,410
	Gain on Disposition of Property	No Escalation	8,500	28,000	-	-	-	-	-	-	-	-
Subtotal: Other Revenue			**$ 291,920**	**$ 206,270**	**$ 162,792**	**$ 151,760**	**$ 147,774**	**$ 147,459**	**$ 142,274**	**$ 131,827**	**$ 130,113**	**$ 135,488**
Debt Service Revenue												
Account	Description	Escalator										
	Overdale ULID Assessment Income	No Escalation	$ 134,130	$ 130,320	$ 130,320	$ 130,320	$ 130,320	$ 130,320	$ 130,320	$ 130,320	$ 130,320	$ 130,320
	Interest Revenue	[Calculated]	-	-	6,713	3,748	3,748	3,719	3,719	3,699	2,811	2,811
Subtotal: Debt Service Revenue			**$ 134,130**	**$ 130,320**	**$ 137,033**	**$ 134,068**	**$ 134,068**	**$ 134,039**	**$ 134,039**	**$ 134,019**	**$ 133,131**	**$ 133,131**
Capital Revenue												
Account	Description	Escalator										
	Interest Revenue	[Calculated]	$ 495,380	$ 537,990	$ 479,891	$ 579,154	$ 678,635	$ 795,812	$ 842,299	$ 944,359	$ 1,063,955	$ 1,195,052
	GFCs **[1]**	[Calculated]	588,050	175,000	1,376,757	1,394,655	1,086,758	1,097,625	1,108,602	1,119,688	1,130,885	1,142,193
	NE Samm / SP Water Joint Fund Transfer	No Escalation	-	-	-	-	-	-	-	-	-	-
	LFCs	No Escalation	269,560	202,170	80,000	80,000	80,000	80,000	80,000	80,000	80,000	80,000
	Developer Fees	Labor Cost Inflation	167,100	180,710	189,746	199,233	209,194	219,654	230,637	242,169	254,277	266,991
Subtotal: Capital Revenue			**$ 1,520,090**	**$ 1,095,870**	**$ 2,126,394**	**$ 2,253,042**	**$ 2,054,587**	**$ 2,193,091**	**$ 2,261,538**	**$ 2,386,216**	**$ 2,529,117**	**$ 2,684,236**
[1] GFC Revenue Projection:												
General Facilities Charge (GFC) per Meter Equivalent			$ 4,729	$ 4,729	$ 4,729	$ 4,729	$ 4,729	$ 4,729	$ 4,729	$ 4,729	$ 4,729	$ 4,729
Projected Growth in Meter Equivalents			0	287	291	295	230	232	234	237	239	242
Calculated GFC Revenue			$ -	$ 1,359,089	$ 1,376,757	$ 1,394,655	$ 1,086,758	$ 1,097,625	$ 1,108,602	$ 1,119,688	$ 1,130,885	$ 1,142,193
GFC Revenue Override			$ 588,050	$ 175,000								

Sammamish Plateau Water
Water & Sewer Rate Model
Revenue Forecast

Sewer Revenue Projections				2018	2019	2020	2021	2022	2023	2024	2025	2026	2027
Service Revenue													
Account	Description	Escalator	Revenue Type										
	Single-Family Base Rate Revenue	Sewer Customers - Single-Family Residential	Base	$ 4,593,510	$ 4,685,390	$ 4,779,098	$ 4,874,680	$ 4,923,427	$ 4,972,661	$ 5,022,387	$ 5,072,611	$ 5,123,337	$ 5,174,571
	Single-Family Consumption Rate Revenue	Sewer Flow - Single-Family Residential	Consumption	-	-	-	-	-	-	-	-	-	-
	Multi-Family Base Rate Revenue	Sewer Customers - Multi-Family Residential	Base	1,574,350	1,605,840	1,637,957	1,670,716	1,687,423	1,704,297	1,721,340	1,738,554	1,755,939	1,773,499
	Multi-Family Consumption Rate Revenue	Sewer Flow - Multi-Family Residential	Consumption	-	-	-	-	-	-	-	-	-	-
	Commercial Base Rate Revenue	Sewer Customers - Non-Residential	Base	87,190	88,940	90,719	92,533	93,459	94,393	95,337	96,290	97,253	98,226
	Commercial Consumption Rate Revenue	Sewer Flow - Non-Residential	Consumption	398,710	406,690	414,824	423,120	427,351	431,625	435,941	440,301	444,704	449,151
	Public Institution Base Rate Revenue	Sewer Customers - Non-Residential	Base	30,690	31,310	31,936	32,575	32,901	33,230	33,562	33,898	34,237	34,579
	Public Institution Consumption Rate Revenue	Sewer Flow - Non-Residential	Consumption	143,630	146,510	149,440	152,429	153,953	155,493	157,048	158,618	160,204	161,806
	Wholesale Base Rate Revenue	No Escalation	Base	1,700	1,700	1,700	1,700	1,700	1,700	1,700	1,700	1,700	1,700
	Wholesale Consumption Rate Revenue	No Escalation	Consumption	-	-	-	-	-	-	-	-	-	-
	Low-Income Discount/Rebate Program	[Calculated]	Base	(2,010)	(18,840)	(19,217)	(19,601)	(19,797)	(19,995)	(20,195)	(20,397)	(20,601)	(20,807)
	Less: Excise Taxes on Base Charges	[Calculated]	Base	(163,334)	(166,165)	(169,487)	(172,876)	(174,604)	(176,350)	(178,113)	(179,893)	(181,692)	(183,508)
	Less: Excise Taxes on Consumption Charges	[Calculated]	Consumption	(14,093)	(14,376)	(14,663)	(14,956)	(15,106)	(15,257)	(15,410)	(15,564)	(15,719)	(15,876)
Subtotal: Service Revenue				**$ 6,650,342**	**$ 6,767,000**	**$ 6,902,307**	**$ 7,040,320**	**$ 7,110,706**	**$ 7,181,797**	**$ 7,253,598**	**$ 7,326,118**	**$ 7,399,362**	**$ 7,473,339**
Adopted / Baseline Rate Adjustments													
Base													
Consumption													
Other Operating Revenue													
Account	Description	Escalator											
	Side Sewer Inspection	No Escalation		$ 101,190	$ 86,020	$ 86,020	$ 86,020	$ 86,020	$ 86,020	$ 86,020	$ 86,020	$ 86,020	$ 86,020
	Metro Charges	Metro Inc. + ERU Growth		8,476,380	8,857,820	9,034,976	9,622,280	9,718,503	10,037,262	10,367,591	10,782,294	11,213,586	11,662,129
	Street Light Revenue	Aggregate Water Customer Growth		68,330	71,750	72,683	73,628	74,364	75,108	75,859	76,617	77,383	78,157
	Grinder Pump Fee	No Escalation		201,340	215,440	215,440	215,440	215,440	215,440	215,440	215,440	215,440	215,440
	Rental Income	No Escalation		21,680	22,550	22,550	22,550	22,550	22,550	22,550	22,550	22,550	22,550
	Late Charges	Aggregate Water Customer Growth		46,240	47,170	47,783	48,404	48,888	49,377	49,871	50,370	50,874	51,382
	Penalties and Interest	Aggregate Water Customer Growth		39,040	40,830	41,361	41,898	42,317	42,741	43,168	43,600	44,036	44,476
	Availability Certificate	No Escalation		1,750	2,230	2,230	2,230	2,230	2,230	2,230	2,230	2,230	2,230
	ROW Permits	No Escalation		-	-	-	-	-	-	-	-	-	-
	Developer Revenue	Labor Cost Inflation		16,350	9,810	10,301	10,816	11,356	11,924	12,520	13,146	13,804	14,494
	Overhead Revenue	Labor Cost Inflation		298,040	327,090	343,445	360,617	378,648	397,580	417,459	438,332	460,248	483,261
	Miscellaneous Revenue	No Escalation		46,630	24,090	24,090	24,090	24,090	24,090	24,090	24,090	24,090	24,090
Subtotal: Other Operating Revenue				**$ 9,316,970**	**$ 9,704,800**	**$ 9,900,878**	**$ 10,507,973**	**$ 10,624,406**	**$ 10,964,322**	**$ 11,316,798**	**$ 11,754,689**	**$ 12,210,261**	**$ 12,684,230**
Other Revenue													
Account	Description	Escalator											
	Investment Income	[Calculated]		$ 164,880	$ 127,430	$ 127,792	$ 125,635	$ 121,855	$ 123,238	$ 121,026	$ 124,883	$ 129,895	$ 134,380
	Gain on Disposition of Property	No Escalation		5,000	23,000	-	-	-	-	-	-	-	-
Subtotal: Other Revenue				**$ 169,880**	**$ 150,430**	**$ 127,792**	**$ 125,635**	**$ 121,855**	**$ 123,238**	**$ 121,026**	**$ 124,883**	**$ 129,895**	**$ 134,380**
Debt Service Revenue													
Account	Description	Escalator											
	ULID Assessments	No Escalation		$ 106,420	$ 88,880	$ -	$ -	$ -	$ -	$ -	$ -	$ -	$ -
	Interest Revenue	[Calculated]		-	-	2,578	1,317	1,317	1,307	1,307	1,300	988	988
Subtotal: Debt Service Revenue				**$ 106,420**	**$ 88,880**	**$ 2,578**	**$ 1,317**	**$ 1,317**	**$ 1,307**	**$ 1,307**	**$ 1,300**	**$ 988**	**$ 988**
Capital Revenue													
Account	Description	Escalator											
	Interest Revenue	[Calculated]		$ 284,490	$ 285,200	$ 479,891	$ 579,154	$ 678,635	$ 795,812	$ 842,299	$ 944,359	$ 1,063,955	$ 1,195,052
	GFCs **[1]**	[Calculated]		567,290	175,000	1,012,861	1,033,119	526,890	532,159	537,481	542,856	548,284	553,767
	LFCs	No Escalation		426,630	404,980	200,000	200,000	200,000	200,000	200,000	200,000	200,000	200,000
	Developer Fees	Labor Cost Inflation		164,660	180,710	189,746	199,233	209,194	219,654	230,637	242,169	254,277	266,991
Subtotal: Capital Revenue				**$ 1,443,070**	**$ 1,045,890**	**$ 1,882,498**	**$ 2,011,506**	**$ 1,614,720**	**$ 1,747,625**	**$ 1,810,417**	**$ 1,929,384**	**$ 2,066,517**	**$ 2,215,810**
[1] GFC Revenue Projection:													
General Facilities Charge (GFC) per Meter Equivalent				$ 3,670	$ 3,670	$ 3,670	$ 3,670	$ 3,670	$ 3,670	$ 3,670	$ 3,670	$ 3,670	$ 3,670
Projected Growth in Meter Equivalents				0	271	276	282	144	145	146	148	149	151
Calculated GFC Revenue				$ -	$ 993,001	$ 1,012,861	$ 1,033,119	$ 526,890	$ 532,159	$ 537,481	$ 542,856	$ 548,284	$ 553,767
GFC Revenue Override				$ 567,290	$ 175,000								

Sammamish Plateau Water
Water & Sewer Rate Model
Revenue Forecast

Service Revenue Projections (After Rate Adjustments)		2018	2019	2020	2021	2022	2023	2024	2025	2026	2027
Water Service Revenue											
Account	Description										
	Single-Family Base Rate Revenue	$ 6,032,850	$ 6,340,453	$ 6,663,737	$ 7,003,504	$ 7,338,797	$ 7,690,142	$ 8,058,307	$ 8,444,099	$ 8,848,360	$ 9,271,975
	Single-Family Consumption Rate Revenue	4,919,070	4,735,980	4,977,456	5,231,244	5,481,690	5,744,125	6,019,126	6,307,291	6,609,253	6,925,671
	Multi-Family Base Rate Revenue	1,147,420	1,205,928	1,267,415	1,332,037	1,395,809	1,462,633	1,532,656	1,606,032	1,682,921	1,763,491
	Multi-Family Consumption Rate Revenue	487,740	565,043	593,853	624,132	654,013	685,324	718,134	752,514	788,541	826,292
	Commercial Base Rate Revenue	230,770	242,536	254,903	267,900	280,725	294,165	308,248	323,005	338,469	354,674
	Commercial Consumption Rate Revenue	201,730	222,845	234,207	246,149	257,933	270,281	283,221	296,780	310,989	325,877
	Industrial Base Rate Revenue	4,440	4,669	4,907	5,157	5,404	5,663	5,934	6,218	6,515	6,827
	Industrial Consumption Rate Revenue	3,550	8,549	8,985	9,443	9,895	10,369	10,865	11,385	11,930	12,502
	Public Institution Base Rate Revenue	175,630	184,582	193,993	203,884	213,645	223,873	234,591	245,822	257,591	269,923
	Public Institution Consumption Rate Revenue	75,300	78,456	82,456	86,660	90,809	95,157	99,712	104,486	109,488	114,730
	Irrigation w/Audit Base Rate Revenue	38,650	40,618	42,689	44,866	47,014	49,264	51,623	54,094	56,684	59,398
	Irrigation w/Audit Consumption Rate Revenue	101,140	176,666	185,673	195,140	204,483	214,272	224,530	235,280	246,544	258,347
	Irrigation w/o Audit Base Rate Revenue	363,550	382,091	401,572	422,048	442,253	463,426	485,612	508,861	533,223	558,751
	Irrigation w/o Audit Consumption Rate Revenue	2,432,880	1,972,173	2,072,730	2,178,413	2,282,704	2,391,989	2,506,505	2,626,504	2,752,248	2,884,012
	Fire Flow Base Rate Revenue	2,720	2,822	2,928	3,038	3,152	3,270	3,392	3,520	3,652	3,788
	Wholesale Base Rate Revenue	760	789	818	849	881	914	948	983	1,020	1,059
	Wholesale Consumption Rate Revenue	490	259	269	279	290	301	312	323	336	348
	Low-Income Discount/Rebate Program	(2,500)	(37,692)	(39,614)	(41,634)	(43,627)	(45,716)	(47,905)	(50,198)	(52,601)	(55,120)
	Less: Excise Taxes on Base Charges	(381,806)	(399,508)	(419,876)	(441,281)	(462,406)	(484,541)	(507,737)	(532,042)	(557,511)	(584,200)
	Less: Excise Taxes on Consumption Charges	(286,043)	(282,184)	(296,572)	(311,693)	(326,615)	(342,251)	(358,637)	(375,806)	(393,798)	(412,651)
Total Water Service Revenue		**$ 15,548,340**	**$ 15,445,073**	**$ 16,232,529**	**$ 17,060,134**	**$ 17,876,847**	**$ 18,732,658**	**$ 19,629,440**	**$ 20,569,154**	**$ 21,553,854**	**$ 22,585,696**
Check: Total Water Service Revenue After Rate Adjustments		*$ 15,548,340*	*$ 15,445,073*	*$ 16,232,529*	*$ 17,060,134*	*$ 17,876,847*	*$ 18,732,658*	*$ 19,629,440*	*$ 20,569,154*	*$ 21,553,854*	*$ 22,585,696*
Sewer Service Revenue											
Account	Description										
	Single-Family Base Rate Revenue	$ 4,593,510	$ 4,837,665	$ 5,094,787	$ 5,365,575	$ 5,595,356	$ 5,834,977	$ 6,084,860	$ 6,345,444	$ 6,617,188	$ 6,900,569
	Single-Family Consumption Rate Revenue	-	-	-	-	-	-	-	-	-	-
	Multi-Family Base Rate Revenue	1,574,350	1,658,030	1,746,154	1,838,962	1,917,716	1,999,842	2,085,485	2,174,796	2,267,932	2,365,056
	Multi-Family Consumption Rate Revenue	-	-	-	-	-	-	-	-	-	-
	Commercial Base Rate Revenue	87,190	91,831	96,711	101,852	106,213	110,762	115,505	120,452	125,610	130,989
	Commercial Consumption Rate Revenue	398,710	419,907	442,226	465,730	485,675	506,474	528,163	550,782	574,369	598,967
	Public Institution Base Rate Revenue	30,690	32,328	34,046	35,855	37,391	38,992	40,662	42,403	44,219	46,113
	Public Institution Consumption Rate Revenue	143,630	151,272	159,312	167,779	174,964	182,457	190,271	198,419	206,916	215,778
	Wholesale Base Rate Revenue	1,700	1,755	1,812	1,871	1,932	1,995	2,060	2,127	2,196	2,267
	Wholesale Consumption Rate Revenue	-	-	-	-	-	-	-	-	-	-
	Low-Income Discount/Rebate Program	(2,010)	(19,452)	(20,486)	(21,575)	(22,499)	(23,463)	(24,467)	(25,515)	(26,608)	(27,747)
	Less: Excise Taxes on Base Charges	(163,334)	(171,565)	(180,683)	(190,285)	(198,433)	(206,931)	(215,792)	(225,033)	(234,669)	(244,718)
	Less: Excise Taxes on Consumption Charges	(14,093)	(14,843)	(15,632)	(16,462)	(17,167)	(17,903)	(18,669)	(19,469)	(20,303)	(21,172)
Total Sewer Service Revenue		**$ 6,650,342**	**$ 6,986,927**	**$ 7,358,247**	**$ 7,749,302**	**$ 8,081,147**	**$ 8,427,202**	**$ 8,788,077**	**$ 9,164,406**	**$ 9,556,850**	**$ 9,966,100**
Check: Total Sewer Service Revenue After Rate Adjustments		*$ 6,650,342*	*$ 6,986,927*	*$ 7,358,247*	*$ 7,749,302*	*$ 8,081,147*	*$ 8,427,202*	*$ 8,788,077*	*$ 9,164,406*	*$ 9,556,850*	*$ 9,966,100*

Sammamish Plateau Water
Water & Sewer Rate Model
Forecast of General (410) Expenses

Summary of General Operating Expense Projections	2018	2019	2020	2021	2022	2023	2024	2025	2026	2027
Water										
Board of Commissioners	$ 217,695	$ 219,790	$ 247,532	$ 237,057	$ 266,683	$ 255,774	$ 287,418	$ 276,070	$ 309,876	$ 298,085
Board of Commissioners - Water Only	8,000	5,000	5,150	5,305	5,464	5,628	5,796	5,970	6,149	6,334
General Management	362,611	379,505	398,272	417,972	438,649	460,354	483,137	507,053	532,157	558,509
Human Resources	153,124	175,704	183,271	191,179	199,445	208,085	217,118	226,561	236,434	246,756
Planning and Protection Programs	219,838	196,659	206,174	216,156	226,627	237,611	249,134	261,222	273,904	287,209
Public Outreach	105,995	165,970	172,574	179,457	186,631	194,111	201,909	210,040	218,518	227,359
Information Systems	463,807	542,552	526,418	549,920	574,512	600,246	627,177	655,363	684,863	715,739
Financial Management	442,958	449,723	494,987	492,447	515,349	539,345	564,487	590,832	647,717	647,365
Customer Services	279,038	376,834	408,940	426,557	444,970	464,216	484,335	505,366	527,354	550,342
Field Services	402,408	476,100	471,831	492,787	514,712	537,652	561,655	586,771	613,054	640,560
Building, Maintenance, and Grounds	265,734	327,570	341,593	356,247	371,561	387,565	404,293	421,777	440,054	459,160
General Expenditures	331,187	453,828	466,949	480,530	443,348	455,341	467,718	480,495	493,684	507,299
Total	**$ 3,252,397**	**$ 3,769,235**	**$ 3,923,692**	**$ 4,045,612**	**$ 4,187,951**	**$ 4,345,928**	**$ 4,554,177**	**$ 4,727,520**	**$ 4,983,764**	**$ 5,144,717**
Sewer										
Board of Commissioners	$ 217,695	$ 219,790	$ 247,532	$ 237,057	$ 266,683	$ 255,774	$ 287,418	$ 276,070	$ 309,876	$ 298,085
Board of Commissioners - Water Only	-	-	-	-	-	-	-	-	-	-
General Management	231,834	242,635	254,633	267,228	280,448	294,325	308,891	324,181	340,231	357,079
Human Resources	97,899	112,336	117,173	122,229	127,514	133,038	138,813	144,850	151,163	157,762
Planning and Protection Programs	202,927	181,531	190,315	199,528	209,194	219,333	229,970	241,128	252,835	265,116
Public Outreach	45,427	71,130	73,960	76,910	79,985	83,190	86,532	90,017	93,651	97,440
Information Systems	296,533	346,878	336,562	351,588	367,311	383,764	400,982	419,003	437,863	457,604
Financial Management	283,202	287,528	316,467	314,843	329,485	344,827	360,901	377,745	414,114	413,889
Customer Services	178,402	240,926	261,454	272,717	284,489	296,794	309,657	323,103	337,161	351,858
Field Services	44,712	52,900	52,426	54,754	57,190	59,739	62,406	65,197	68,117	71,173
Building, Maintenance, and Grounds	169,896	209,430	218,396	227,765	237,555	247,788	258,482	269,661	281,346	293,561
General Expenditures	211,743	290,152	298,541	307,224	283,452	291,119	299,033	307,202	315,634	324,338
Total	**$ 1,980,268**	**$ 2,255,235**	**$ 2,367,459**	**$ 2,431,843**	**$ 2,523,306**	**$ 2,609,691**	**$ 2,743,086**	**$ 2,838,156**	**$ 3,001,990**	**$ 3,087,906**

Sammamish Plateau Water
Water & Sewer Rate Model
Forecast of General (410) Expenses

Operating Expense Projections				2018	2019	2020	2021	2022	2023	2024	2025	2026	2027
Board of Commissioners			Water Share	50.00%	50.00%	50.00%	50.00%	50.00%	50.00%	50.00%	50.00%	50.00%	50.00%
Account	Description	Escalator											
	Personnel	Labor Cost Inflation		$ 150,490	$ 186,640	$ 195,972	$ 205,771	$ 216,059	$ 226,862	$ 238,205	$ 250,115	$ 262,621	$ 275,752
	Contractual - Elections	General Cost Inflation		36,350	-	38,564	-	40,912	-	43,404	-	46,047	-
	Contractual - Miscellaneous	General Cost Inflation		60,000	62,000	63,860	65,776	67,749	69,782	71,875	74,031	76,252	78,540
	Contractual - Other	General Cost Inflation		187,650	189,840	195,535	201,401	207,443	213,667	220,077	226,679	233,479	240,484
	Commodities	General Cost Inflation		900	1,100	1,133	1,167	1,202	1,238	1,275	1,313	1,353	1,393
Subtotal: Board of Commissioners				**$ 435,390**	**$ 439,580**	**$ 495,064**	**$ 474,115**	**$ 533,366**	**$ 511,548**	**$ 574,836**	**$ 552,139**	**$ 619,753**	**$ 596,169**
Board of Commissioners - Water Only			Water Share	100.00%	100.00%	100.00%	100.00%	100.00%	100.00%	100.00%	100.00%	100.00%	100.00%
Account	Description	Escalator											
	Personnel	Labor Cost Inflation		$ -	$ -	$ -	$ -	$ -	$ -	$ -	$ -	$ -	$ -
	Contractual	General Cost Inflation		8,000	5,000	5,150	5,305	5,464	5,628	5,796	5,970	6,149	6,334
	Commodities	General Cost Inflation		-	-	-	-	-	-	-	-	-	-
Subtotal: Board of Commissioners - Water Only				**$ 8,000**	**$ 5,000**	**$ 5,150**	**$ 5,305**	**$ 5,464**	**$ 5,628**	**$ 5,796**	**$ 5,970**	**$ 6,149**	**$ 6,334**
General Management			Water Share	61.00%	61.00%	61.00%	61.00%	61.00%	61.00%	61.00%	61.00%	61.00%	61.00%
Account	Description	Escalator											
	Personnel	Labor Cost Inflation		$ 576,980	$ 605,070	$ 635,324	$ 667,090	$ 700,444	$ 735,466	$ 772,240	$ 810,852	$ 851,394	$ 893,964
	Contractual	General Cost Inflation		16,700	16,020	16,501	16,996	17,505	18,031	18,572	19,129	19,703	20,294
	Commodities	General Cost Inflation		765	1,050	1,082	1,114	1,147	1,182	1,217	1,254	1,291	1,330
Subtotal: General Management				**$ 594,445**	**$ 622,140**	**$ 652,906**	**$ 685,199**	**$ 719,097**	**$ 754,679**	**$ 792,028**	**$ 831,234**	**$ 872,388**	**$ 915,588**
Human Resources			Water Share	61.00%	61.00%	61.00%	61.00%	61.00%	61.00%	61.00%	61.00%	61.00%	61.00%
Account	Description	Escalator											
	Personnel	Labor Cost Inflation		$ 179,550	$ 188,140	$ 197,547	$ 207,424	$ 217,796	$ 228,685	$ 240,120	$ 252,126	$ 264,732	$ 277,968
	Contractual	General Cost Inflation		64,265	84,300	86,829	89,434	92,117	94,880	97,727	100,659	103,678	106,789
	Commodities	General Cost Inflation		7,207	15,600	16,068	16,550	17,047	17,558	18,085	18,627	19,186	19,762
Subtotal: Human Resources				**$ 251,022**	**$ 288,040**	**$ 300,444**	**$ 313,408**	**$ 326,959**	**$ 341,124**	**$ 355,931**	**$ 371,411**	**$ 387,596**	**$ 404,519**
Planning and Protection Programs			Water Share	52.00%	52.00%	52.00%	52.00%	52.00%	52.00%	52.00%	52.00%	52.00%	52.00%
Account	Description	Escalator											
	Personnel	Labor Cost Inflation		$ 402,710	$ 347,650	$ 365,033	$ 383,284	$ 402,448	$ 422,571	$ 443,699	$ 465,884	$ 489,178	$ 513,637
	Contractual	General Cost Inflation		16,172	26,000	26,780	27,583	28,411	29,263	30,141	31,045	31,977	32,936
	Commodities	General Cost Inflation		3,883	4,540	4,676	4,816	4,961	5,110	5,263	5,421	5,584	5,751
Subtotal: Planning and Protection Programs				**$ 422,765**	**$ 378,190**	**$ 396,489**	**$ 415,684**	**$ 435,820**	**$ 456,944**	**$ 479,104**	**$ 502,351**	**$ 526,739**	**$ 552,325**
Public Outreach			Water Share	70.00%	70.00%	70.00%	70.00%	70.00%	70.00%	70.00%	70.00%	70.00%	70.00%
Account	Description	Escalator											
	Personnel	Labor Cost Inflation		$ 107,260	$ 116,040	$ 121,842	$ 127,934	$ 134,331	$ 141,047	$ 148,100	$ 155,505	$ 163,280	$ 171,444
	Contractual	General Cost Inflation		32,427	101,660	104,710	107,851	111,087	114,419	117,852	121,387	125,029	128,780
	Commodities	General Cost Inflation		11,735	19,400	19,982	20,581	21,199	21,835	22,490	23,165	23,860	24,575
Subtotal: Public Outreach				**$ 151,422**	**$ 237,100**	**$ 246,534**	**$ 256,367**	**$ 266,616**	**$ 277,301**	**$ 288,441**	**$ 300,057**	**$ 312,168**	**$ 324,799**
Information Systems			Water Share	61.00%	61.00%	61.00%	61.00%	61.00%	61.00%	61.00%	61.00%	61.00%	61.00%
Account	Description	Escalator											
	Personnel	Labor Cost Inflation		$ 495,190	$ 601,790	$ 631,880	$ 663,473	$ 696,647	$ 731,480	$ 768,053	$ 806,456	$ 846,779	$ 889,118
	Contractual	General Cost Inflation		186,640	216,170	130,985	134,915	138,962	143,131	147,425	151,848	156,403	161,095
	Commodities	General Cost Inflation		78,510	71,470	100,116	103,119	106,213	109,399	112,681	116,062	119,544	123,130
Subtotal: Information Systems				**$ 760,340**	**$ 889,430**	**$ 862,981**	**$ 901,508**	**$ 941,822**	**$ 984,010**	**$ 1,028,160**	**$ 1,074,366**	**$ 1,122,726**	**$ 1,173,343**

Sammamish Plateau Water
Water & Sewer Rate Model
Forecast of General (410) Expenses

Operating Expense Projections (Continued)			2018	2019	2020	2021	2022	2023	2024	2025	2026	2027
Financial Management		Water Share	61.00%	61.00%	61.00%	61.00%	61.00%	61.00%	61.00%	61.00%	61.00%	61.00%
Account	Description	Escalator										
	Personnel	Labor Cost Inflation	$ 570,880	$ 604,350	$ 634,568	$ 666,296	$ 699,611	$ 734,591	$ 771,321	$ 809,887	$ 850,381	$ 892,900
	Contractual - Consulting Services	General Cost Inflation	11,900	7,500	47,725	7,957	8,195	8,441	8,695	8,955	57,224	9,501
	Contractual - Other	General Cost Inflation	135,490	123,220	126,917	130,724	134,646	138,685	142,846	147,131	151,545	156,091
	Commodities	General Cost Inflation	7,890	2,180	2,245	2,313	2,382	2,454	2,527	2,603	2,681	2,762
Subtotal: Financial Management			**$ 726,160**	**$ 737,250**	**$ 811,455**	**$ 807,289**	**$ 844,834**	**$ 884,171**	**$ 925,388**	**$ 968,576**	**$ 1,061,831**	**$ 1,061,254**
Customer Services		Water Share	61.00%	61.00%	61.00%	61.00%	61.00%	61.00%	61.00%	61.00%	61.00%	61.00%
Account	Description	Escalator										
	Personnel	Labor Cost Inflation	$ 307,810	$ 392,550	$ 438,428	$ 460,349	$ 483,366	$ 507,535	$ 532,911	$ 559,557	$ 587,535	$ 616,912
	Contractual	General Cost Inflation	107,810	179,090	184,463	189,997	195,696	201,567	207,614	213,843	220,258	226,866
	Commodities	General Cost Inflation	41,820	46,120	47,504	48,929	50,397	51,908	53,466	55,070	56,722	58,423
Subtotal: Customer Services			**$ 457,440**	**$ 617,760**	**$ 670,394**	**$ 699,274**	**$ 729,459**	**$ 761,010**	**$ 793,991**	**$ 828,469**	**$ 864,515**	**$ 902,201**
Field Services		Water Share	90.00%	90.00%	90.00%	90.00%	90.00%	90.00%	90.00%	90.00%	90.00%	90.00%
Account	Description	Escalator										
	Personnel	Labor Cost Inflation	$ 359,040	$ 359,850	$ 377,843	$ 396,735	$ 416,571	$ 437,400	$ 459,270	$ 482,233	$ 506,345	$ 531,662
	Contractual	General Cost Inflation	52,790	54,750	59,483	61,267	63,105	64,998	66,948	68,957	71,025	73,156
	Commodities - Computer Software	General Cost Inflation	-	30,000	-	-	-	-	-	-	-	-
	Commodities - Meters	General Cost Inflation	18,900	65,000	66,950	68,959	71,027	73,158	75,353	77,613	79,942	82,340
	Commodities - Other	General Cost Inflation	16,390	19,400	19,982	20,581	21,199	21,835	22,490	23,165	23,860	24,575
Subtotal: Field Services			**$ 447,120**	**$ 529,000**	**$ 524,257**	**$ 547,542**	**$ 571,902**	**$ 597,391**	**$ 624,061**	**$ 651,968**	**$ 681,172**	**$ 711,734**
Building, Maintenance, and Grounds		Water Share	61.00%	61.00%	61.00%	61.00%	61.00%	61.00%	61.00%	61.00%	61.00%	61.00%
Account	Description	Escalator										
	Personnel	Labor Cost Inflation	$ 255,020	$ 343,950	$ 361,148	$ 379,205	$ 398,165	$ 418,073	$ 438,977	$ 460,926	$ 483,972	$ 508,171
	Contractual - Other	General Cost Inflation	131,740	141,860	146,116	150,499	155,014	159,665	164,455	169,388	174,470	179,704
	Commodities	General Cost Inflation	48,870	51,190	52,726	54,307	55,937	57,615	59,343	61,124	62,957	64,846
Subtotal: Building, Maintenance, and Grounds			**$ 435,630**	**$ 537,000**	**$ 559,989**	**$ 584,012**	**$ 609,116**	**$ 635,353**	**$ 662,775**	**$ 691,438**	**$ 721,399**	**$ 752,721**
General Expenditures		Water Share	61.00%	61.00%	61.00%	61.00%	61.00%	61.00%	61.00%	61.00%	61.00%	61.00%
Account	Description	Escalator										
	Contractual - Records Management	Labor Cost Inflation	$ -	$ 109,500	$ 114,975	$ 120,724	$ 42,760	$ 44,898	$ 47,143	$ 49,500	$ 51,975	$ 54,574
	Contractual - Other	General Cost Inflation	510,110	499,560	514,547	529,983	545,883	562,259	579,127	596,501	614,396	632,828
	Commodities - Contingency	No Escalation	-	100,000	100,000	100,000	100,000	100,000	100,000	100,000	100,000	100,000
	Commodities - Other	General Cost Inflation	32,820	34,920	35,968	37,047	38,158	39,303	40,482	41,696	42,947	44,236
Subtotal: General Expenditures			**$ 542,930**	**$ 743,980**	**$ 765,489**	**$ 787,754**	**$ 726,801**	**$ 746,460**	**$ 766,752**	**$ 787,697**	**$ 809,318**	**$ 831,637**

Sammamish Plateau Water
Water & Sewer Rate Model
Forecast of Water (420) Expenses

Summary of Water Operating Expense Projections	2018	2019	2020	2021	2022	2023	2024	2025	2026	2027
Water										
Administration - Water Purchases	$ 1,545,830	$ 1,676,680	$ 1,730,317	$ 2,007,997	$ 2,218,095	$ 2,430,293	$ 2,650,823	$ 2,852,776	$ 3,080,235	$ 3,318,628
Administration - Other	1,265,340	1,967,540	2,094,314	2,195,833	2,302,332	2,414,057	2,531,267	2,654,233	2,783,239	2,918,584
Wells / Production	634,990	618,460	622,960	657,365	672,200	707,642	723,791	761,818	779,393	820,196
Treatment	312,170	202,000	209,230	216,727	224,208	231,953	239,970	248,271	256,864	265,761
Booster Stations	206,490	183,410	194,371	199,298	210,559	215,379	227,482	232,760	245,771	251,548
Storage	11,460	9,030	9,303	9,583	9,872	10,170	10,477	10,793	11,118	11,453
Water Mains / Appurtenances	405,560	214,550	220,987	227,616	234,445	241,478	248,722	256,184	263,869	271,786
Meters	78,120	8,000	8,240	8,487	8,742	9,004	9,274	9,552	9,839	10,134
SCADA	89,870	93,900	97,857	101,990	106,306	110,815	115,525	120,446	125,587	130,959
Building & Grounds	-	-	-	-	-	-	-	-	-	-
Total	**$ 4,549,830**	**$ 4,973,570**	**$ 5,187,578**	**$ 5,624,897**	**$ 5,986,759**	**$ 6,370,791**	**$ 6,757,332**	**$ 7,146,832**	**$ 7,555,915**	**$ 7,999,049**

Operating Expense Projections			2018	2019	2020	2021	2022	2023	2024	2025	2026	2027
Administration - Water Purchases												
Account	Description	Escalator										
	Cascade Water Alliance Admin Dues	General Cost Inflation	$ 459,730	$ 464,250	$ 474,619	$ 477,818	$ 495,794	$ 513,643	$ 532,067	$ 551,086	$ 570,719	$ 590,985
	Cascade Water Alliance Admin Conservation	General Cost Inflation	109,100	115,980	117,840	122,296	126,897	131,465	136,180	141,048	146,073	151,260
	Cascade Water Alliance Admin Water	Aggregate Water Demand Growth + Inflation	977,000	1,096,450	1,137,858	1,407,884	1,595,405	1,785,186	1,982,575	2,160,641	2,363,442	2,576,383
Subtotal: Administration - Water Purchases			**$ 1,545,830**	**$ 1,676,680**	**$ 1,730,317**	**$ 2,007,997**	**$ 2,218,095**	**$ 2,430,293**	**$ 2,650,823**	**$ 2,852,776**	**$ 3,080,235**	**$ 3,318,628**
Administration - Other												
Account	Description	Escalator										
	Personnel	Labor Cost Inflation	$ 1,105,830	$ 1,812,370	$ 1,934,489	$ 2,031,213	$ 2,132,774	$ 2,239,412	$ 2,351,383	$ 2,468,952	$ 2,592,400	$ 2,722,020
	Contractual	General Cost Inflation	89,370	88,700	91,361	94,102	96,925	99,833	102,828	105,912	109,090	112,363
	Commodities	General Cost Inflation	70,140	66,470	68,464	70,518	72,634	74,813	77,057	79,369	81,750	84,202
Subtotal: Administration - Other			**$ 1,265,340**	**$ 1,967,540**	**$ 2,094,314**	**$ 2,195,833**	**$ 2,302,332**	**$ 2,414,057**	**$ 2,531,267**	**$ 2,654,233**	**$ 2,783,239**	**$ 2,918,584**
Wells / Production												
Account	Description	Escalator										
	Personnel	Labor Cost Inflation	$ 54,320	$ -	$ -	$ -	$ -	$ -	$ -	$ -	$ -	$ -
	Contractual - Electricity	Aggregate Water Demand Growth + Inflation	410,000	422,300	440,459	459,399	477,775	496,886	516,761	537,431	558,929	581,286
	Contractual - Equipment Maintenance	General Cost Inflation	10,170	22,500	2,575	12,200	2,732	12,943	2,898	13,732	3,075	14,568
	Contractual - Wheeling	Wheeling Charge Increases	30,800	32,000	34,016	35,479	36,898	38,374	39,909	41,505	43,165	44,892
	Contractual - Other	General Cost Inflation	116,700	127,630	131,459	135,403	139,465	143,649	147,958	152,397	156,969	161,678
	Commodities	General Cost Inflation	13,000	14,030	14,451	14,884	15,331	15,791	16,265	16,753	17,255	17,773
Subtotal: Wells / Production			**$ 634,990**	**$ 618,460**	**$ 622,960**	**$ 657,365**	**$ 672,200**	**$ 707,642**	**$ 723,791**	**$ 761,818**	**$ 779,393**	**$ 820,196**
Treatment												
Account	Description	Escalator										
	Personnel	Labor Cost Inflation	$ 99,570	$ -	$ -	$ -	$ -	$ -	$ -	$ -	$ -	$ -
	Contractual	General Cost Inflation	16,500	34,000	35,020	36,071	37,153	38,267	39,415	40,598	41,816	43,070
	Commodities - Chemicals	Aggregate Water Demand Growth + Inflation	87,100	90,000	93,870	97,906	101,823	105,896	110,131	114,537	119,118	123,883
	Commodities - Other	General Cost Inflation	109,000	78,000	80,340	82,750	85,233	87,790	90,423	93,136	95,930	98,808
Subtotal: Treatment			**$ 312,170**	**$ 202,000**	**$ 209,230**	**$ 216,727**	**$ 224,208**	**$ 231,953**	**$ 239,970**	**$ 248,271**	**$ 256,864**	**$ 265,761**
Booster Stations												
Account	Description	Escalator										
	Personnel	Labor Cost Inflation	$ 18,120	$ -	$ -	$ -	$ -	$ -	$ -	$ -	$ -	$ -
	Contractual - Electricity	Aggregate Water Demand Growth + Inflation	179,400	175,100	182,629	190,482	198,102	206,026	214,267	222,837	231,751	241,021
	Contractual - Equipment Maintenance	General Cost Inflation	3,330	500	3,698	530	3,923	563	4,162	597	4,415	633
	Contractual - Other	General Cost Inflation	2,000	4,000	4,120	4,244	4,371	4,502	4,637	4,776	4,919	5,067
	Commodities	General Cost Inflation	3,640	3,810	3,924	4,042	4,163	4,288	4,417	4,549	4,686	4,826
Subtotal: Booster Stations			**$ 206,490**	**$ 183,410**	**$ 194,371**	**$ 199,298**	**$ 210,559**	**$ 215,379**	**$ 227,482**	**$ 232,760**	**$ 245,771**	**$ 251,548**

Sammamish Plateau Water
Water & Sewer Rate Model
Forecast of Water (420) Expenses

Operating Expense Projections (Continued)			2018	2019	2020	2021	2022	2023	2024	2025	2026	2027
Storage												
Account	Description	Escalator										
	Personnel	Labor Cost Inflation	$ 4,100	$ -	$ -	$ -	$ -	$ -	$ -	$ -	$ -	$ -
	Contractual - Electricity	Aggregate Water Demand Growth + Inflation	120	130	136	141	147	153	159	165	172	179
	Contractual - Other	General Cost Inflation	2,700	6,500	6,695	6,896	7,103	7,316	7,535	7,761	7,994	8,234
	Commodities	General Cost Inflation	4,540	2,400	2,472	2,546	2,623	2,701	2,782	2,866	2,952	3,040
Subtotal: Storage			**$ 11,460**	**$ 9,030**	**$ 9,303**	**$ 9,583**	**$ 9,872**	**$ 10,170**	**$ 10,477**	**$ 10,793**	**$ 11,118**	**$ 11,453**
Water Mains / Appurtenances												
Account	Description	Escalator										
	Personnel	Labor Cost Inflation	$ 226,260	$ -	$ -	$ -	$ -	$ -	$ -	$ -	$ -	$ -
	Contractual - Other	General Cost Inflation	84,000	100,050	103,052	106,143	109,327	112,607	115,985	119,465	123,049	126,740
	Commodities	General Cost Inflation	95,300	114,500	117,935	121,473	125,117	128,871	132,737	136,719	140,821	145,045
Subtotal: Water Mains / Appurtenances			**$ 405,560**	**$ 214,550**	**$ 220,987**	**$ 227,616**	**$ 234,445**	**$ 241,478**	**$ 248,722**	**$ 256,184**	**$ 263,869**	**$ 271,786**
Meters												
Account	Description	Escalator										
	Personnel	Labor Cost Inflation	$ 72,420	$ -	$ -	$ -	$ -	$ -	$ -	$ -	$ -	$ -
	Contractual	General Cost Inflation	3,000	6,000	6,180	6,365	6,556	6,753	6,956	7,164	7,379	7,601
	Commodities	General Cost Inflation	2,700	2,000	2,060	2,122	2,185	2,251	2,319	2,388	2,460	2,534
Subtotal: Meters			**$ 78,120**	**$ 8,000**	**$ 8,240**	**$ 8,487**	**$ 8,742**	**$ 9,004**	**$ 9,274**	**$ 9,552**	**$ 9,839**	**$ 10,134**
SCADA												
Account	Description	Escalator										
	Personnel	Labor Cost Inflation	$ 54,310	$ 57,000	$ 59,850	$ 62,843	$ 65,985	$ 69,284	$ 72,748	$ 76,385	$ 80,205	$ 84,215
	Contractual	General Cost Inflation	27,860	29,600	30,488	31,403	32,345	33,315	34,315	35,344	36,404	37,496
	Commodities	General Cost Inflation	7,700	7,300	7,519	7,745	7,977	8,216	8,463	8,717	8,978	9,247
Subtotal: SCADA			**$ 89,870**	**$ 93,900**	**$ 97,857**	**$ 101,990**	**$ 106,306**	**$ 110,815**	**$ 115,525**	**$ 120,446**	**$ 125,587**	**$ 130,959**
Building & Grounds												
Account	Description	Escalator										
	Personnel	Labor Cost Inflation	$ -	$ -	$ -	$ -	$ -	$ -	$ -	$ -	$ -	$ -
	Contractual	General Cost Inflation	-	-	-	-	-	-	-	-	-	-
	Commodities	General Cost Inflation	-	-	-	-	-	-	-	-	-	-
Subtotal: Building & Grounds			**$ -**	**$ -**	**$ -**	**$ -**	**$ -**	**$ -**	**$ -**	**$ -**	**$ -**	**$ -**

Sammamish Plateau Water
Water & Sewer Rate Model
Forecast of Sewer (430) Expenses

Summary of Sewer Operating Expense Projections	2018	2019	2020	2021	2022	2023	2024	2025	2026	2027
Sewer										
Administration - King County	$ 8,067,000	$ 8,530,600	$ 9,034,976	$ 9,622,280	$ 9,718,503	$ 10,037,262	$ 10,367,591	$ 10,782,294	$ 11,213,586	$ 11,662,129
Administration - Other	862,270	1,162,230	1,246,694	1,306,771	1,369,785	1,435,879	1,505,207	1,577,927	1,654,206	1,734,221
Lift Stations	341,210	247,120	278,100	267,037	299,523	287,367	321,994	309,267	346,179	332,859
Sewer Mains / Appurtenances	154,970	84,000	86,520	89,116	91,789	94,543	97,379	100,300	103,309	106,409
Grinder Pumps	86,900	52,500	54,075	55,697	57,368	59,089	60,862	62,688	64,568	66,505
SCADA	84,110	91,100	94,973	99,019	103,247	107,664	112,279	117,103	122,143	127,412
Building & Grounds	-	-	-	-	-	-	-	-	-	-
Total	**$ 9,596,460**	**$ 10,167,550**	**$ 10,795,338**	**$ 11,439,920**	**$ 11,640,214**	**$ 12,021,804**	**$ 12,465,312**	**$ 12,949,578**	**$ 13,503,992**	**$ 14,029,536**

Operating Expense Projections			2018	2019	2020	2021	2022	2023	2024	2025	2026	2027
Administration - King County												
Account	Description	Escalator										
	King County Metro Charges	[Calculated]	$ 8,067,000	$ 8,530,600	$ 9,034,976	$ 9,622,280	$ 9,718,503	$ 10,037,262	$ 10,367,591	$ 10,782,294	$ 11,213,586	$ 11,662,129
Subtotal: Administration - King County			**$ 8,067,000**	**$ 8,530,600**	**$ 9,034,976**	**$ 9,622,280**	**$ 9,718,503**	**$ 10,037,262**	**$ 10,367,591**	**$ 10,782,294**	**$ 11,213,586**	**$ 11,662,129**
Administration - Other												
Account	Description	Escalator										
	Personnel	Labor Cost Inflation	$ 793,460	$ 1,079,840	$ 1,133,832	$ 1,190,524	$ 1,250,050	$ 1,312,552	$ 1,378,180	$ 1,447,089	$ 1,519,443	$ 1,595,415
	Contractual - Maintenance Agreements	General Cost Inflation	1,250	2,000	30,060	30,962	31,891	32,847	33,833	34,848	35,893	36,970
	Contractual - Other	General Cost Inflation	26,840	41,800	43,054	44,346	45,676	47,046	48,458	49,911	51,409	52,951
	Commodities	General Cost Inflation	40,720	38,590	39,748	40,940	42,168	43,433	44,736	46,078	47,461	48,885
Subtotal: Administration - Other			**$ 862,270**	**$ 1,162,230**	**$ 1,246,694**	**$ 1,306,771**	**$ 1,369,785**	**$ 1,435,879**	**$ 1,505,207**	**$ 1,577,927**	**$ 1,654,206**	**$ 1,734,221**
Lift Stations												
Account	Description	Escalator										
	Personnel	Labor Cost Inflation	$ 87,140	$ -	$ -	$ -	$ -	$ -	$ -	$ -	$ -	$ -
	Contractual - Electricity	Aggregate Water Demand Growth + Inflation	109,830	115,620	120,592	125,777	130,808	136,041	141,482	147,141	153,027	159,148
	Contractual - Equipment Maintenance	General Cost Inflation	20,000	-	21,218	-	22,510	-	23,881	-	25,335	-
	Contractual - Other	General Cost Inflation	11,840	14,000	14,420	14,853	15,298	15,757	16,230	16,717	17,218	17,735
	Commodities - Chemicals	Aggregate Water Demand Growth + Inflation	64,140	65,000	67,795	70,710	73,539	76,480	79,539	82,721	86,030	89,471
	Commodities - Other	General Cost Inflation	48,260	52,500	54,075	55,697	57,368	59,089	60,862	62,688	64,568	66,505
Subtotal: Lift Stations			**$ 341,210**	**$ 247,120**	**$ 278,100**	**$ 267,037**	**$ 299,523**	**$ 287,367**	**$ 321,994**	**$ 309,267**	**$ 346,179**	**$ 332,859**
Sewer Mains / Appurtenances												
Account	Description	Escalator										
	Personnel	Labor Cost Inflation	$ 100,910	$ -	$ -	$ -	$ -	$ -	$ -	$ -	$ -	$ -
	Contractual	General Cost Inflation	27,030	42,000	43,260	44,558	45,895	47,271	48,690	50,150	51,655	53,204
	Commodities	General Cost Inflation	27,030	42,000	43,260	44,558	45,895	47,271	48,690	50,150	51,655	53,204
Subtotal: Sewer Mains / Appurtenances			**$ 154,970**	**$ 84,000**	**$ 86,520**	**$ 89,116**	**$ 91,789**	**$ 94,543**	**$ 97,379**	**$ 100,300**	**$ 103,309**	**$ 106,409**
Grinder Pumps												
Account	Description	Escalator										
	Personnel	Labor Cost Inflation	$ 45,870	$ -	$ -	$ -	$ -	$ -	$ -	$ -	$ -	$ -
	Contractual	General Cost Inflation	4,100	10,000	10,300	10,609	10,927	11,255	11,593	11,941	12,299	12,668
	Commodities	General Cost Inflation	36,930	42,500	43,775	45,088	46,441	47,834	49,269	50,747	52,270	53,838
Subtotal: Grinder Pumps			**$ 86,900**	**$ 52,500**	**$ 54,075**	**$ 55,697**	**$ 57,368**	**$ 59,089**	**$ 60,862**	**$ 62,688**	**$ 64,568**	**$ 66,505**
SCADA												
Account	Description	Escalator										
	Personnel	Labor Cost Inflation	$ 54,310	$ 57,000	$ 59,850	$ 62,843	$ 65,985	$ 69,284	$ 72,748	$ 76,385	$ 80,205	$ 84,215
	Contractual	General Cost Inflation	22,100	26,800	27,604	28,432	29,285	30,164	31,069	32,001	32,961	33,949
	Commodities	General Cost Inflation	7,700	7,300	7,519	7,745	7,977	8,216	8,463	8,717	8,978	9,247
Subtotal: SCADA			**$ 84,110**	**$ 91,100**	**$ 94,973**	**$ 99,019**	**$ 103,247**	**$ 107,664**	**$ 112,279**	**$ 117,103**	**$ 122,143**	**$ 127,412**
Building & Grounds												
Account	Description	Escalator										
	Personnel	Labor Cost Inflation	$ -	$ -	$ -	$ -	$ -	$ -	$ -	$ -	$ -	$ -
	Contractual	General Cost Inflation	-	-	-	-	-	-	-	-	-	-
	Commodities	General Cost Inflation	-	-	-	-	-	-	-	-	-	-
Subtotal: Building & Grounds			**$ -**	**$ -**	**$ -**	**$ -**	**$ -**	**$ -**	**$ -**	**$ -**	**$ -**	**$ -**

Sammamish Plateau Water
Water & Sewer Rate Model
Forecast of Engineering (440) Expenses

Summary of Engineering Operating Expense Projections	2018	2019	2020	2021	2022	2023	2024	2025	2026	2027
Water										
Administration	$ 372,425	$ 402,910	$ 422,474	$ 442,998	$ 464,530	$ 487,121	$ 510,822	$ 535,688	$ 561,778	$ 589,151
Administration (Water Only)	-	3,000	3,090	3,183	3,278	3,377	3,478	3,582	3,690	3,800
Administration (Sewer Only)	-	-	-	-	-	-	-	-	-	-
Water Development Services	167,100	180,680	189,714	199,200	209,160	219,618	230,599	242,128	254,235	266,947
Water Capital Improvement Planning	97,510	113,860	119,553	125,531	131,807	138,398	145,317	152,583	160,212	168,223
Sewer Development Services	-	-	-	-	-	-	-	-	-	-
Sewer Capital Improvement Planning	-	-	-	-	-	-	-	-	-	-
Total	**$ 637,035**	**$ 700,450**	**$ 734,831**	**$ 770,911**	**$ 808,775**	**$ 848,512**	**$ 890,215**	**$ 933,982**	**$ 979,915**	**$ 1,028,121**
Sewer										
Administration	$ 372,425	$ 402,910	$ 422,474	$ 442,998	$ 464,530	$ 487,121	$ 510,822	$ 535,688	$ 561,778	$ 589,151
Administration (Water Only)	-	-	-	-	-	-	-	-	-	-
Administration (Sewer Only)	-	-	-	-	-	-	-	-	-	-
Water Development Services	-	-	-	-	-	-	-	-	-	-
Water Capital Improvement Planning	-	-	-	-	-	-	-	-	-	-
Sewer Development Services	164,660	180,680	189,714	199,200	209,160	219,618	230,599	242,128	254,235	266,947
Sewer Capital Improvement Planning	39,350	53,560	56,238	59,050	62,002	65,103	68,358	71,776	75,364	79,133
Total	**$ 576,435**	**$ 637,150**	**$ 668,426**	**$ 701,247**	**$ 735,692**	**$ 771,841**	**$ 809,778**	**$ 849,592**	**$ 891,377**	**$ 935,230**

Operating Expense Projections			2018	2019	2020	2021	2022	2023	2024	2025	2026	2027
Administration		Water Share	50.00%	50.00%	50.00%	50.00%	50.00%	50.00%	50.00%	50.00%	50.00%	50.00%
Account	Description	Escalator										
	Personnel	Labor Cost Inflation	$ 703,450	$ 747,620	$ 785,001	$ 824,251	$ 865,464	$ 908,737	$ 954,174	$ 1,001,882	$ 1,051,976	$ 1,104,575
	Contractual	General Cost Inflation	26,700	37,660	38,790	39,953	41,152	42,387	43,658	44,968	46,317	47,707
	Commodities	General Cost Inflation	14,700	20,540	21,156	21,791	22,445	23,118	23,811	24,526	25,262	26,019
Subtotal: Administration			**$ 744,850**	**$ 805,820**	**$ 844,947**	**$ 885,995**	**$ 929,060**	**$ 974,241**	**$ 1,021,643**	**$ 1,071,376**	**$ 1,123,555**	**$ 1,178,301**
Administration (Water Only)		Water Share	100.00%	100.00%	100.00%	100.00%	100.00%	100.00%	100.00%	100.00%	100.00%	100.00%
Account	Description	Escalator										
	Personnel	Labor Cost Inflation	$ -	$ -	$ -	$ -	$ -	$ -	$ -	$ -	$ -	$ -
	Contractual	General Cost Inflation	-	3,000	3,090	3,183	3,278	3,377	3,478	3,582	3,690	3,800
	Commodities	General Cost Inflation	-	-	-	-	-	-	-	-	-	-
Subtotal: Administration (Water Only)			**$ -**	**$ 3,000**	**$ 3,090**	**$ 3,183**	**$ 3,278**	**$ 3,377**	**$ 3,478**	**$ 3,582**	**$ 3,690**	**$ 3,800**
Administration (Sewer Only)		Water Share	0.00%	0.00%	0.00%	0.00%	0.00%	0.00%	0.00%	0.00%	0.00%	0.00%
Account	Description	Escalator										
	Personnel	Labor Cost Inflation	$ -	$ -	$ -	$ -	$ -	$ -	$ -	$ -	$ -	$ -
	Contractual	General Cost Inflation	-	-	-	-	-	-	-	-	-	-
	Commodities	General Cost Inflation	-	-	-	-	-	-	-	-	-	-
Subtotal: Administration (Sewer Only)			**$ -**	**$ -**	**$ -**	**$ -**	**$ -**	**$ -**	**$ -**	**$ -**	**$ -**	**$ -**
Water Development Services		Water Share	100.00%	100.00%	100.00%	100.00%	100.00%	100.00%	100.00%	100.00%	100.00%	100.00%
Account	Description	Escalator										
	Personnel	Labor Cost Inflation	$ 167,100	$ 180,680	$ 189,714	$ 199,200	$ 209,160	$ 219,618	$ 230,599	$ 242,128	$ 254,235	$ 266,947
	Contractual	General Cost Inflation	-	-	-	-	-	-	-	-	-	-
	Commodities	General Cost Inflation	-	-	-	-	-	-	-	-	-	-
Subtotal: Water Development Services			**$ 167,100**	**$ 180,680**	**$ 189,714**	**$ 199,200**	**$ 209,160**	**$ 219,618**	**$ 230,599**	**$ 242,128**	**$ 254,235**	**$ 266,947**
Water Capital Improvement Planning		Water Share	100.00%	100.00%	100.00%	100.00%	100.00%	100.00%	100.00%	100.00%	100.00%	100.00%
Account	Description	Escalator										
	Personnel	Labor Cost Inflation	$ 97,510	$ 113,860	$ 119,553	$ 125,531	$ 131,807	$ 138,398	$ 145,317	$ 152,583	$ 160,212	$ 168,223
	Contractual	General Cost Inflation	-	-	-	-	-	-	-	-	-	-
	Commodities	General Cost Inflation	-	-	-	-	-	-	-	-	-	-
Subtotal: Water Capital Improvement Planning			**$ 97,510**	**$ 113,860**	**$ 119,553**	**$ 125,531**	**$ 131,807**	**$ 138,398**	**$ 145,317**	**$ 152,583**	**$ 160,212**	**$ 168,223**
Sewer Development Services		Water Share	0.00%	0.00%	0.00%	0.00%	0.00%	0.00%	0.00%	0.00%	0.00%	0.00%
Account	Description	Escalator										
	Personnel	Labor Cost Inflation	$ 164,660	$ 180,680	$ 189,714	$ 199,200	$ 209,160	$ 219,618	$ 230,599	$ 242,128	$ 254,235	$ 266,947
	Contractual	General Cost Inflation	-	-	-	-	-	-	-	-	-	-
	Commodities	General Cost Inflation	-	-	-	-	-	-	-	-	-	-
Subtotal: Sewer Development Services			**$ 164,660**	**$ 180,680**	**$ 189,714**	**$ 199,200**	**$ 209,160**	**$ 219,618**	**$ 230,599**	**$ 242,128**	**$ 254,235**	**$ 266,947**
Sewer Capital Improvement Planning		Water Share	0.00%	0.00%	0.00%	0.00%	0.00%	0.00%	0.00%	0.00%	0.00%	0.00%
Account	Description	Escalator										
	Personnel	Labor Cost Inflation	$ 39,350	$ 53,560	$ 56,238	$ 59,050	$ 62,002	$ 65,103	$ 68,358	$ 71,776	$ 75,364	$ 79,133
	Contractual	General Cost Inflation	-	-	-	-	-	-	-	-	-	-
	Commodities	General Cost Inflation	-	-	-	-	-	-	-	-	-	-
Subtotal: Sewer Capital Improvement Planning			**$ 39,350**	**$ 53,560**	**$ 56,238**	**$ 59,050**	**$ 62,002**	**$ 65,103**	**$ 68,358**	**$ 71,776**	**$ 75,364**	**$ 79,133**

Sammamish Plateau Water
Water & Sewer Rate Model
Capital Program

Capital Program (Current Dollars) | **2018 Dollars**

Project ID	Description	Water Share	Total Cost (Current Dollars)	Cost by Year (Current Dollars) 2018	2019	2020	2021	2022	2023	2024	2025	2026	2027
	Water Operating Fund - General												
C-1	District Headquarters Maintenance Program	100.00%	$ 683,835	$ 30,000	$ 113,835	$ 30,000	$ 30,000	$ 30,000	$ 30,000	$ 30,000	$ 30,000	$ 30,000	$ 30,000
C-2	Enterprise Level System Replacement Program	100.00%	$ 765,000	$ 15,000			$ 120,000			$ 45,000	$ 45,000	$ 45,000	$ 45,000
C-3	Computerized Maintenance Management System	100.00%	$ 201,000		$ 201,000								
C-4	District Headquarters Communications Rewiring	100.00%	$ 96,000		$ 96,000								
C-5	Miscellaneous Capital Projects	100.00%	$ 1,235,000		$ 65,000	$ 65,000	$ 65,000	$ 65,000	$ 65,000	$ 65,000	$ 65,000	$ 65,000	$ 65,000
C-6	Security Improvements	100.00%	$ 144,570	$ 18,000	$ 15,296	$ 26,400	$ 26,400	$ 26,400	$ 32,074				
C-7	Vehicles and Large Equipment (General)	100.00%	$ 169,500		$ 20,400	$ 20,400	$ 34,800	$ 3,900				$ 18,000	$ 24,000
C-8	District Headquarters Facility Expansion	100.00%	$ 390,000			$ 15,000			$ 375,000				
G-1	AMR/AMI	100.00%	$ 31,284	$ 31,284									
G-2	Smart Water Infrastructure	100.00%	$ 400,000			$ 100,000	$ 100,000	$ 100,000	$ 100,000				
G-3	Vehicles and Large Equipment (Water)	100.00%	$ 2,052,463	$ 100,000	$ 290,963	$ 431,000		$ 109,000	$ 215,000		$ 87,500	$ 230,000	$ 103,000
G-4	Water Hydraulic Model	100.00%	$ 39,085	$ 25,085	$ 14,000								
G-6	550 Zone Study (Conversion to Blended Supply)	100.00%	$ 30,000					$ 30,000					
G-7	700 SH Zone Study (Conversion to 550 & 590 Zones)	100.00%	$ 30,000										
	Water Operating Fund - Supply												
W-1	Well 9 Pump and Motor Upgrade for Wells 7, 8 and 9 Well Fie	100.00%	$ 82,500				$ 82,500						
W-3	Well 13 Pump Enclosure	100.00%	$ 281,400	$ 14,000	$ 267,400								
	Water Operating Fund - Booster Pumps												
BP-1	SE 43rd Booster Pump Station Rehabilitation	100.00%	$ 3,000,000										
BP-2	New 297 Booster Pump	100.00%	$ 29,247	$ 29,247									
	Water Operating Fund - Storage / Reservoirs												
ST-1	Reservoir Safety Improvements	100.00%	$ 280,000	$ 51,064	$ 228,936								
ST-4	Section 36 East Tank Interior Coating	100.00%	$ 511,000								$ 511,000		
ST-5	Section 36 East Tank Exterior Top Coating (2030)	100.00%	$ 266,000										
ST-6	Section 36 West Tank Exterior Top Coating and Interior (2030)	100.00%	$ 770,000										
ST-7	Section 36 East Tank Exterior and Interior Replace Coating (20	100.00%	$ -										
ST-8	Section 36 West Tank Exterior Replace Coating (2040)	100.00%	$ -										
ST-9	2 MG Tank Interior and Exterior Coating	100.00%	$ 1,115,100	$ 35,000	$ 1,080,100								
ST-10	2 MG Tank Improvements	100.00%	$ 1,217,300	$ 140,000	$ 1,077,300								
ST-13	7 MG & 297 Tank Seismic Retrofit	100.00%	$ 1,279,386	$ 269,045	$ 1,010,341								
ST-14	7 MG Tank Exterior Coating	100.00%	$ 686,000			$ 686,000							
ST-15	7 MG Interior Coating	100.00%	$ 532,000						$ 532,000				
ST-16	7 MG Exterior Coating (2035)	100.00%	$ 542,500										
ST-17	297 Tank Coating (exterior top coat, interior replace)	100.00%	$ 427,000						$ 427,000				
ST-18	297 Tank Coating (2035 exterior Replace coating)	100.00%	$ 297,500										
ST-19	Well 12 Tank Top Coating and Interior	100.00%	$ 175,000						$ 175,000				
ST-20	Well 12 Tank Replace Exterior Coating (2037)	100.00%	$ 150,500										
ST-21	Well 12 Reclaim Tank Replace Interior and Exterior Coating (2	100.00%	$ 91,000										
	Water Operating Fund - Water Mains												
M-1	Zackuse Creek Fish Passage Culvert Main Replacement - 8"	100.00%	$ 25,001	$ 20,491	$ 4,510								
FF-2	212th Ave NE from NE 14th to NE 16th AC Replacement - 8"	100.00%	$ 241,000										
FF-3	NE 11th St and 209th Ave Replacement - 8"	100.00%	$ 669,000										
FF-7	Sammamish Town Center SE 4th St Replacement - 12"	100.00%	$ 238,610	$ 1,040	$ 237,570								
FF-9	SE 14th St Main Connection - 8"	100.00%	$ 322,000										

Sammamish Plateau Water
Water & Sewer Rate Model
Capital Program

Capital Program (Current Dollars) | **2018 Dollars**

Project ID	Description	Water Share	Total Cost (Current Dollars)	Cost by Year (Current Dollars) 2018	2019	2020	2021	2022	2023	2024	2025	2026	2027
FF-11	Waverly Hills PRV Addition and Main Replacement - 8"	100.00%	$ 2,633,000										
FF-13	Overdale 232nd Ave SE and SE 54th Pl Fire Flow Connection -	100.00%	$ 835,000										
FF-15	NE 70th St Replacement - 12"	100.00%	$ 1,188,560										
FF-17	NE 45th St/268th Ave NE Connection - 8"	100.00%	$ 1,251,000										
FF-18	NE 45th St/272nd Ave NE Replacement - 8"	100.00%	$ 301,000										
R-6	NE 15th St from 207th Pl NE to 208th NE Connection - 8"	100.00%	$ 34,750								$ 34,750		
R-9	NE 8th St Replacement - 8"	100.00%	$ 157,320										
R-11	236th Ct NE Connection - 8"	100.00%	$ 206,000										
R-16	243rd Ave NE Connection - 8"	100.00%	$ 76,000										
R-25	NE 2nd Ct Connection - 8"	100.00%	$ 255,000										
R-51	251st Ave SE to West Beaver Lake Dr SE Connection - 8"	100.00%	$ 323,000										
R-54	SE 28th Pl Connection - 8"	100.00%	$ 269,000										
R-59	239th Ave SE Connection - 8"	100.00%	$ 474,000										
R-64	229th Pl SE Connection - 8"	100.00%	$ 134,620				$ 134,620						
R-69	University House/Timbers Connection - 8"	100.00%	$ 123,000										
R-74	245th Ave NE Connection - 8"	100.00%	$ 322,000										
R-75	NE 47th Pl and 254th Ave NE Connection - 8"	100.00%	$ 771,000										
DE/CIP	212th Way SE Road Improvements - Water	100.00%	$ 170	$ 170									
DE/CIP	221st Place SE Water Main Replacement	100.00%	$ 150,698	$ 150,698									
DE/CIP	SE 62nd & 221st Pl SE Water and Sewer Replacement	100.00%	$ 118,448	$ 118,448									
	Water Capital Replacement Fund - Supply												
W-1	Well 9 Pump and Motor Upgrade for Wells 7, 8, and 9 Well Fie	100.00%	$ 385,000				$ 385,000						
	Water Capital Replacement Fund - Water Mains												
FF-4	North Inglewood Pressure Zone Modification	100.00%	$ 471,590	$ 30,000	$ 441,590								
FF-7	Sammamish Town Center SE 4th St Replacement - 12"	100.00%	$ 45,887	$ 200	$ 45,687								
DE/CIP	Inglewood Hill Rd at 211th PL NE Water Main Replacement - 8	100.00%	$ 28,750	$ 28,750									
	Water GFC Fund - General												
C-8	District Headquarters Facility Expansion	100.00%	$ 910,000			$ 35,000		$ 875,000					
G-4	Water Hydraulic Model	100.00%	$ 16,751	$ 10,751	$ 6,000								
G-5	Water Comprehensive Plan	100.00%	$ 798,560	$ 263,000	$ 35,560								
	Water GFC Fund - Supply	100.00%	$ -										
W-1	Well 9 Pump and Motor Upgrade for Wells 7, 8, and 9 Well Fie	100.00%	$ 82,500				$ 82,500						
W-2	Well 9 PFC Treatment	100.00%	$ 4,881,000					$ 4,881,000					
W-3	Well 13 Pump Enclosure	100.00%	$ 120,600	$ 6,000	$ 114,600								
	Water GFC Fund - Booster Pumps												
BP-2	New 297 Booster Pump	100.00%	$ 12,534	$ 12,534									
n/a	Well 9 to 650 Zone Booster Pump Station (see Project M-8)	100.00%	$ -										
n/a	2 MG Booster Pump Station (see Project ST-11)	100.00%	$ -										
	Water GFC Fund - Storage / Reservoirs												
ST-1	Reservoir Safety Improvements	100.00%	$ 120,000	$ 21,884	$ 98,116								
ST-2	3 MG Tank Replace Interior Coating and Exterior Top Coating	100.00%	$ 126,000						$ 126,000				
ST-3	3 MG Tank Replace Exterior Coating (2035)	100.00%	$ 82,500										
ST-4	Section 36 East Tank Interior Coating	100.00%	$ 219,000								$ 219,000		

Sammamish Plateau Water
Water & Sewer Rate Model
Capital Program

Capital Program (Current Dollars) | **2018 Dollars**

Project ID	Description	Water Share	Total Cost (Current Dollars)	Cost by Year (Current Dollars) 2018	2019	2020	2021	2022	2023	2024	2025	2026	2027
ST-5	Section 36 East Tank Exterior Top Coating (2030)	100.00%	$ 114,000										
ST-6	Section 36 West Tank Exterior Top Coating and Interior (2030)	100.00%	$ 330,000										
ST-7	Section 36 East Tank Exterior and Interior Replace Coating (20	100.00%	$ -										
ST-8	Section 36 West Tank Exterior Replace Coating (2040)	100.00%	$ -										
ST-9	2 MG Tank Interior and Exterior Coating	100.00%	$ 477,900	$ 15,000	$ 462,900								
ST-10	2 MG Tank Improvements	100.00%	$ 521,700	$ 60,000	$ 461,700								
ST-11	2 MG Booster Pump Station	100.00%	$ 475,000										$ 475,000
ST-12	10 MG Reservoir (Future)	100.00%	$ -										
ST-14	7 MG Tank Exterior Coating	100.00%	$ 294,000			$ 294,000							
ST-15	7 MG Interior Coating	100.00%	$ 228,000						$ 228,000				
ST-16	7 MG Exterior Coating (2035)	100.00%	$ 232,500										
ST-17	297 Tank Coating (exterior top coat, interior replace)	100.00%	$ 183,000						$ 183,000				
ST-18	297 Tank Coating (2035 exterior Replace coating)	100.00%	$ 127,500										
ST-19	Well 12 Tank Top Coating and Interior	100.00%	$ 75,000						$ 75,000				
ST-20	Well 12 Tank Replace Exterior Coating (2037)	100.00%	$ 64,500										
ST-21	Well 12 Reclaim Tank Replace Interior and Exterior Coating (2(	100.00%	$ 39,000										
	Water GFC Fund - Water Mains												
M-2	216th Ave SE and Main Street Replacement - 8" & 12"	100.00%	$ 87,890										
M-3	Main Street from 216th to 218th Replacement (Flynn 218th St	100.00%	$ 34,000		$ 34,000								
M-4	SE 8th from 212th to 218th Ave SE Replacement - 12"	100.00%	$ 185,300			$ 123,760					$ 61,540		
M-5	228th Avenue SE 24" Transmission Main/Replacement	100.00%	$ 934,000										$ 934,000
M-6	Sorrento Estates 24" Transmission Main	100.00%	$ 726,360		$ 726,360								
M-7	Issaquah Fall City Rd 16" Transmission Main/Replacement	100.00%	$ 649,814	$ 84,467	$ 565,347								
M-8	Well 9 to 650 Zone 16" Transmission Main and Booster Pump	100.00%	$ 7,050,000		$ 50,000		$ 200,000						
M-9	Redmond-Fall City Rd/Ames Lake Rd 8" 12" Transmission Mair	100.00%	$ 3,911,000										
FF-5	216th Ave NE PRV Addition	100.00%	$ 217,000										$ 217,000
FF-7	Sammamish Town Center SE 4th St Replacement - 12"	100.00%	$ 55,064	$ 240	$ 54,824								
FF-10	SE 16th St PRV Addition and SE 17th St Main Connection - 8"	100.00%	$ 141,700							$ 141,700			
FF-14	NE 80th St Connection - 12"	100.00%	$ 218,110						$ 218,110				
FF-15	NE 70th St Replacement - 12"	100.00%	$ 243,440										
R-5	207th Ave NE PRV Addition	100.00%	$ 217,000										
R-7	East Sammamish Park Connection - 12"	100.00%	$ 104,040										$ 104,040
R-10	212th Ave NE PRV Addition	100.00%	$ 217,000										$ 217,000
R-12	NE 14th St Connection - 12"	100.00%	$ 46,580					$ 46,580					
R-26	208th Ave SE PRV Addition	100.00%	$ 217,000										
R-33	SE 19th St and 193rd Ave SE Connection (8") and PRV Additior	100.00%	$ 418,200										
R-52	SE 29th St to SE 24th Way Connection (8") and PRV Addition	100.00%	$ 691,000										
R-66	East Lake Sammamish Center North Connection - 16"	100.00%	$ 230,000				$ 230,000						
R-68	East Lake Sammamish Center South Connection - 16"	100.00%	$ 489,000				$ 489,000						
R-70	Dawnbreaker Cascade Intertie/Connection - 8"	100.00%	$ -										
R-76	NE 29th Pl Connection (8") and PRV Addition	100.00%	$ 739,000										
DE/CIP	218th McCabe (aka Brixton) DEA - 12"	100.00%	$ 21,250	$ 21,250									
DE/CIP	SE 52nd @ 229th SE AC Water Main Replacement - 8"	100.00%	$ 1,100	$ 1,100									
DE/CIP	221st PL SE Water Main Replacement - 12"	100.00%	$ 150,698	$ 150,698									
DE/CIP	SE 62nd & 221st Pl SE Water Replacement - 12"	100.00%	$ 41,617	$ 41,617									
	Water LFC Fund - Water Mains												
M-2	216th Ave SE and Main Street Replacement - 8" & 12"	100.00%	$ 429,110										

Sammamish Plateau Water
Water & Sewer Rate Model
Capital Program

Capital Program (Current Dollars) | **2018 Dollars**

Project ID	Description	Water Share	Total Cost (Current Dollars)	Cost by Year (Current Dollars) 2018	2019	2020	2021	2022	2023	2024	2025	2026	2027
M-4	SE 8th from 212th to 218th Ave SE Replacement - 12"	100.00%	$ 904,700			$ 604,240						$ 300,460	
FF-7	Sammamish Town Center SE 4th St Replacement - 12"	100.00%	$ 578,170	$ 2,520	$ 575,650								
FF-10	SE 16th St PRV Addition and SE 17th St Main Connection - 8"	100.00%	$ 403,300								$ 403,300		
FF-14	NE 80th St Connection - 12"	100.00%	$ 1,064,890							$ 1,064,890			
R-6	NE 15th St from 207th Pl NE to 208th NE Connection - 8"	100.00%	$ 104,250								$ 104,250		
R-7	East Sammamish Park Connection - 12"	100.00%	$ 507,960										$ 507,960
R-12	NE 14th St Connection - 12"	100.00%	$ 227,420					$ 227,420					
DE/CIP	Inglewood Hill Rd at 211th PL NE Water Main Replacement - 8	100.00%	$ 28,750	$ 28,750									
	Water DEA/ULID												
M-3	Main Street from 216th to 218th Replacement (Flynn 218th St	100.00%	$ 166,000		$ 166,000								
ST-2	3 MG Tank Replace Interior Coating and Exterior Top Coating	100.00%	$ 420,000						$ 420,000				
FF-1	NE 27th Pl/NE 29th St PRV Addition and Main Connection - 8"	100.00%	$ 848,000										$ 848,000
FF-6	SE 1st St/222nd PL SE in Town Center and 228th Ave SE to Sar	100.00%	$ 2,745,000			$ 549,000	$ 549,000	$ 274,500	$ 274,500	$ 274,500	$ 274,500	$ 274,500	$ 274,500
FF-8	Plateau Club Replacement - 12"	100.00%	$ 53,000										
FF-12	Waverly Shores Connection - 8"	100.00%	$ 356,000										
FF-16	NE Union Hill Rd and 266th Ave NE Connection - 8"	100.00%	$ 1,156,000										
R-1	NE 25th St Connection 1 (NE 25th St Assemblage DEA) - 8"	100.00%	$ 211,000			$ 211,000							
R-2	NE 25th St Connection 2 - 8"	100.00%	$ 450,000								$ 450,000		
R-3	NE 24th St Connection (Cedar Hill DEA) - 8"	100.00%	$ 262,000			$ 262,000							
R-4	NE 26th St Connection - 8"	100.00%	$ 618,000										
R-8	NE 14th St from 212th to 216th NE Connection - 8"	100.00%	$ -										
R-9	NE 8th St Replacement - 8"	100.00%	$ 70,680										
R-13	238th Ave NE Connection - 8"	100.00%	$ 228,000										$ 228,000
R-14	240th Ave NE Replacement (NE 8th Assemblage DEA) - 8"	100.00%	$ 521,000			$ 521,000							
R-15	NE 4th St from 235th to 238th NE Connection - 8"	100.00%	$ -										
R-17	NE 18th St Connection 1 (NE 18th Assemblage DEA) - 8"	100.00%	$ 366,000			$ 366,000							
R-18	NE 18th St Connection 2 - 8"	100.00%	$ 228,000					$ 228,000					
R-19	247th Pl NE from NE 18th to 20th Connection - 8"	100.00%	$ 312,000										$ 312,000
R-20	245th Ave NE Connection (Atherton-Campbell 246th NE Plat D	100.00%	$ 838,000			$ 838,000							
R-21	NE 11th St to 250th Ave NE Connection - 8"	100.00%	$ 748,000										
R-22	250th Ave NE from NE 14th to NE 18th Connection - 8"	100.00%	$ 801,673										
R-23	254th Ave NE from NE 8th to NE 4th Connection - 8"	100.00%	$ 681,000										
R-24	222nd Pl NE Connection - 8"	100.00%	$ 121,000										
R-27	220th Ave NE Connection - 8"	100.00%	$ 343,000					$ 343,000					
R-28	Town Center NW Connections - 12"	100.00%	$ 2,133,000			$ 426,600	$ 426,600	$ 213,300	$ 213,300	$ 213,300	$ 213,300	$ 213,300	$ 213,300
R-29	Town Center SW Connections - 12"	100.00%	$ 2,194,000			$ 438,800	$ 438,800	$ 219,400	$ 219,400	$ 219,400	$ 219,400	$ 219,400	$ 219,400
R-30	Town Center SE Connections - 12"	100.00%	$ 1,753,000			$ 350,600	$ 350,600	$ 175,300	$ 175,300	$ 175,300	$ 175,300	$ 175,300	$ 175,300
R-31	Future Town Center School Site Connection - 12"	100.00%	$ 1,216,000										
R-32	Thirty Acres Park Connection - 8"	100.00%	$ 794,000										
R-33	SE 19th St and 193rd Ave SE Connection (8") and PRV Additior	100.00%	$ 601,800										
R-34	SE 12th St and 208th Ave SE Connection - 8"	100.00%	$ 1,239,535										
R-35	SE 19th St and 205th Ave SE Connection - 8"	100.00%	$ 270,000										
R-36	SE 20th St Connection - 8"	100.00%	$ 168,000										
R-37	SE 24th St to 210th Pl SE Connection (Tridco SE 24th Short Pla	100.00%	$ 292,000			$ 292,000							
R-38	215th SE Connection - 8"	100.00%	$ 265,000										$ 265,000
R-39	218th Ave SE Connection - 8"	100.00%	$ 498,000										
R-40	223rd Ave SE Connection (Lancaster 223rd DEA) - 8"	100.00%	$ 474,000				$ 474,000						
R-41	226th Ave SE Connection - 8"	100.00%	$ 759,000										

Sammamish Plateau Water
Water & Sewer Rate Model
Capital Program

Capital Program (Current Dollars) | **2018 Dollars**

Project ID	Description	Water Share	Total Cost (Current Dollars)	Cost by Year (Current Dollars) 2018	2019	2020	2021	2022	2023	2024	2025	2026	2027
R-42	SE 22nd St Connection - 8"	100.00%	$ 522,000										
R-43	239th Pl SE Connection - 8"	100.00%	$ 961,000										
R-44	244th Ave SE Connection - 8"	100.00%	$ 561,000										
R-45	247th Ave to 248th Ave SE Connection - 8"	100.00%	$ 191,000										
R-46	SE 13th St Connection - 8"	100.00%	$ 175,000										
R-47	SE 17th St to SE 14th St Connection - 8"	100.00%	$ 727,000										
R-48	SE 17th St Connection (Yu SE 17th Short Plat DEA) - 8"	100.00%	$ 62,000			$ 62,000							
R-49	SE 20th Pl from 245th to 242nd Ave SE Connection - 8"	100.00%	$ 409,000										
R-50	246th Ave SE to SE 17th Pl Connection (Sammamish Highlands	100.00%	$ 151,000		$ 151,000								
R-53	SE 29th St Connection - 8"	100.00%	$ 662,000										
R-55	SE 39th St Connection - 8"	100.00%	$ 830,000										
R-56	SE 29th Pl Connectoin - 8"	100.00%	$ 363,000										
R-57	221st Ave SE Connection - 8"	100.00%	$ 386,000										
R-58	SE 35th St Connection - 8"	100.00%	$ 152,000										
R-60	241st Ave SE Connection - 8"	100.00%	$ 349,000										
R-61	SE 25th St and SE Duthie Hill Rd Connections - 8"	100.00%	$ 1,765,000										
R-62	SE Issaquah-Fall City Rd Connection - 8"	100.00%	$ 1,419,000										
R-63	SE 48th St to SE 46th Alignment Connection (Hochanadel SE 4	100.00%	$ 704,000				$ 704,000						
R-65	240th Ave SE Connection - 8"	100.00%	$ 101,000										
R-67	229th Ave SE Connection - 8"	100.00%	$ 380,000										
R-71	250th and 252nd Ave NE from NE 80th to NE 85th St Connecti	100.00%	$ 2,697,000										
R-72	248th Ave NE Connection - 8"	100.00%	$ 587,000										
R-73	254th Ave NE Connection - 8"	100.00%	$ 1,113,000										
R-77	NE 24th St Amesbury Connection - 8"	100.00%	$ 936,000										
DE/CIP	Inglewood JNT 2387 NE 15th Residence DEA - 8"	100.00%	$ 88,000	$ 88,000									
DE/CIP	16th Sammamish II - Shillam DEA - 8"	100.00%	$ 108,000	$ 108,000									
DE/CIP	Twins Ridge DEA - 8"	100.00%	$ 698,000	$ 698,000									
DE/CIP	Morningside Estates DEA - 8"	100.00%	$ 358,000	$ 358,000									
DE/CIP	Flynn 218th SE Plat DEA (onsite portion) - 8"	100.00%	$ 150,000	$ 150,000									
DE/CIP	218th McCabe (aka Brixton) DEA - 12"	100.00%	$ 103,750	$ 103,750									
DE/CIP	Hennessey 222nd SE Short Plat & 218th McCabe (aka Brixton	100.00%	$ 496,000	$ 496,000									
DE/CIP	Village at Sammamish Town Center DEA - 12"	100.00%	$ 680,000	$ 680,000									
DE/CIP	Town Center Plateau 120 Apartments DEA - 12"	100.00%	$ 414,000	$ 414,000									
DE/CIP	Coffman 222nd NE Short Plat DEA - 8"	100.00%	$ 231,000	$ 231,000									
DE/CIP	Reynolds SE 8th Short Plat DEA - 8"	100.00%	$ 121,000	$ 121,000									
DE/CIP	Richter SE 14th Plat DEA - 8"	100.00%	$ 179,000	$ 179,000									
DE/CIP	Sammamish Highlands on 248th DEA - 8"	100.00%	$ 301,000	$ 301,000									
DE/CIP	Penny Lane South DEA - 8"	100.00%	$ 426,000	$ 426,000									
DE/CIP	223rd Mullen-Warren Assemblage DEA - 8"	100.00%	$ 919,000	$ 919,000									
DE/CIP	Providence Ridge DEA - 12"	100.00%	$ 1,028,000	$ 1,028,000									
DE/CIP	Taylor SE 20th Short Plat DEA - 8"	100.00%	$ 123,000	$ 123,000									
DE/CIP	Sienna Lane II DEA- 8"	100.00%	$ 105,000	$ 105,000									
DE/CIP	Sunnyhills Elementary School Replacement DEA - 12"	100.00%	$ 733,000	$ 733,000									
DE/CIP	Jarvis Estates SW DEA - 8"	100.00%	$ 458,000	$ 458,000									
DE/CIP	Oxley SE 30th Short Plat DEA - 8"	100.00%	$ 316,000	$ 316,000									
DE/CIP	Irons-Hedberg Issaquah-Beaver Lake Rd Plat DEA - 8"	100.00%	$ 398,000	$ 398,000									
DE/CIP	201 Development 9081 Redmond Ridge Short Plat DEA - 8"	100.00%	$ 1,064,000	$ 1,064,000									
DE/CIP	Culbertson 252nd NE Plat DEA - 8"	100.00%	$ 923,000	$ 923,000									

Sammamish Plateau Water
Water & Sewer Rate Model
Capital Program

Capital Program (Current Dollars) | 2018 Dollars

Project ID	Description	Water Share	Total Cost (Current Dollars)	Cost by Year (Current Dollars) 2018	2019	2020	2021	2022	2023	2024	2025	2026	2027
	Sewer Operating Fund - General												
	District Headquarters Maintenance Program	0.00%	$ 255,890	$ 20,000	$ 75,890	$ 20,000	$ 20,000	$ 20,000	$ 20,000	$ 20,000	$ 20,000	$ 20,000	$ 20,000
	Enterprise Level System Replacement Program	0.00%	$ 242,000	$ 10,000		$ 32,000	$ 80,000			$ 30,000	$ 30,000	$ 30,000	$ 30,000
	Miscellaneous Capital Projects	0.00%	$ 315,000		$ 35,000	$ 35,000	$ 35,000	$ 35,000	$ 35,000	$ 35,000	$ 35,000	$ 35,000	$ 35,000
	Security Improvements	0.00%	$ 57,398	$ 12,000	$ 10,198	$ 17,600	$ 17,600						
	Vehicles and Large Equipment (General)	0.00%	$ 87,600		$ 13,600	$ 30,000		$ 16,000				$ 12,000	$ 16,000
	District Headquarters LED Lighting Upgrade	0.00%	$ -										
	Computerized Maintenance Management System	0.00%	$ 134,000		$ 134,000								
	Vehicles and Large Equipment (Sewer)	0.00%	$ 694,500	$ 164,500	$ 300,000	$ 87,000	$ 143,000						
	District Headquarters Communications Rewiring	0.00%	$ 64,000		$ 64,000								
	District Headquarters Facility Expansion	0.00%	$ 390,000			$ 15,000			$ 375,000				
		0.00%											
	Sewer Operating Fund - Lift Stations	0.00%	$ -										
	Freegard Lift Station Wetwell Coating and Overflow Tank	0.00%	$ 116,000		$ 12,500		$ 103,500						
	Inglewood Lift Station Bypass	0.00%	$ 1,776	$ 1,776									
	Control Structure Odor Control	0.00%	$ 86,100			$ 10,500	$ 75,600						
		0.00%											
	Sewer Operating Fund - Grinder Pumps	0.00%											
	Grinder Pump Replacement Program	0.00%	$ 800,000		$ 160,000	$ 160,000	$ 160,000	$ 160,000	$ 160,000				
		0.00%											
	Sewer Operating Fund - Sewer Mains	0.00%											
	SE 62nd & 221st Pl SE Water and Sewer Replacement	0.00%	$ 165,808	$ 165,808									
	Zackuse Creek Fish Passage	0.00%	$ 25,000	$ 20,491	$ 4,509								
		0.00%											
	Sewer Capital Replacement Fund - Lift Stations	0.00%											
	Central LS Pump 2 Upsize	0.00%	$ 50,400	$ 50,400									
		0.00%											
	Sewer GFC Fund - General	0.00%											
	District Headquarters Facility Expansion	0.00%	$ 910,000			$ 35,000			$ 875,000				
	East Lake Sammamish Sewer Capacity Project	0.00%	$ 595,000		$ 595,000								
	Sewer Comprehensive Plan	0.00%	$ 452,000		$ 452,000								
		0.00%											
	Sewer GFC Fund - Lift Stations	0.00%											
	Central LS Pump 2 Upsize	0.00%	$ 12,600	$ 12,600									
	Control Structure Odor Control	0.00%	$ 200,900			$ 24,500	$ 176,400						
	Freegard Lift Station Wetwell Coating and Overflow Tank	0.00%	$ 116,000		$ 12,500		$ 103,500						
	Inglewood Lift Station Bypass	0.00%	$ 1,924	$ 1,924									
		0.00%	$ -										
	Sewer GFC Fund - Sewer Mains	0.00%	$ -										
	Cedar Hill Dry Future Sewer	0.00%	$ 50,000		$ 50,000								
	SE 62nd & 221st Pl SE Water and Sewer Replacement	0.00%	$ 58,257	$ 58,257									
		0.00%	$ -										
	Sewer LFC Fund - Sewer Mains	0.00%	$ -										
	Cedar Hill Dry Future Sewer	0.00%	$ 50,000		$ 50,000								
	Evergreen Ford Participation Agreement (Getting Sewer to We	0.00%	$ 50,000	$ 50,000									
	ULID S-22 SE 18th Sewer	0.00%	$ 385,357	$ 354,463	$ 30,894								
	Sammamish Towncenter SE 4th St Water and Sewer Main	0.00%	$ 1,916,598	$ 572,454	$ 1,344,144								
	Total		$ 122,977,375	$ 13,742,754	$ 12,056,219	$ 7,214,400	$ 5,837,420	$ 2,048,800	$ 9,194,574	$ 4,556,500	$ 3,059,000	$ 1,729,500	$ 5,358,500

Sammamish Plateau Water
Water & Sewer Rate Model
Capital Cost Summary & Funding Strategy

Capital Expenditures	2018	2019	2020	2021	2022	2023	2024	2025	2026	2027
Projected Capital Expenditures:										
Water	$ 12,248,082	$ 8,711,984	$ 6,747,800	$ 4,922,820	$ 1,817,800	$ 7,729,574	$ 4,471,500	$ 2,974,000	$ 1,632,500	$ 5,257,500
Sewer	1,494,672	3,344,235	466,600	914,600	231,000	1,465,000	85,000	85,000	97,000	101,000
Total	**$ 13,742,754**	**$ 12,056,219**	**$ 7,214,400**	**$ 5,837,420**	**$ 2,048,800**	**$ 9,194,574**	**$ 4,556,500**	**$ 3,059,000**	**$ 1,729,500**	**$ 5,358,500**
Planned Use of Existing Debt Proceeds										
Water										
Sewer										
Total	**$ -**	**$ -**	**$ -**	**$ -**	**$ -**	**$ -**	**$ -**	**$ -**	**$ -**	**$ -**
Net Capital Expenditures										
Water	$ 12,248,082	$ 8,711,984	$ 6,747,800	$ 4,922,820	$ 1,817,800	$ 7,729,574	$ 4,471,500	$ 2,974,000	$ 1,632,500	$ 5,257,500
Sewer	1,494,672	3,344,235	466,600	914,600	231,000	1,465,000	85,000	85,000	97,000	101,000
Total	**$ 13,742,754**	**$ 12,056,219**	**$ 7,214,400**	**$ 5,837,420**	**$ 2,048,800**	**$ 9,194,574**	**$ 4,556,500**	**$ 3,059,000**	**$ 1,729,500**	**$ 5,358,500**

Capital Funding Strategy	2018	2019	2020	2021	2022	2023	2024	2025	2026	2027
Water:										
Grants/Contributions										
DEAs/ULIDs	10,420,750	317,000	4,317,000	2,943,000	1,453,500	882,500	1,302,500	1,332,500	882,500	2,535,500
Local Facilities Charge Fund	31,270	575,650	604,240	-	-	227,420	1,064,890	507,550	300,460	428,427
General Facilities Charge Fund	688,541	2,609,406	452,760	1,001,500	-	5,802,580	830,110	360,700	61,540	1,947,040
CP Fund	1,048,571	4,722,652	1,373,800	593,320	364,300	817,074	1,274,000	773,250	388,000	267,000
Capital Replacement Fund	58,950	487,277	-	385,000	-	-	-	-	-	-
Public Works Trust Fund Loans										
Revenue Bonds	-	-	-	-	-	-	-	-	-	-
Total	**$ 12,248,082**	**$ 8,711,984**	**$ 6,747,800**	**$ 4,922,820**	**$ 1,817,800**	**$ 7,729,574**	**$ 4,471,500**	**$ 2,974,000**	**$ 1,632,500**	**$ 5,177,967**
Sewer:										
Grants/Contributions										
DEAs/ULIDs	-	-	-	-	-	-	-	-	-	-
Local Facilities Charge Fund	976,917	1,425,038	-	-	-	-	-	-	-	-
General Facilities Charge Fund	72,781	1,109,500	59,500	279,900	-	875,000	-	-	-	-
CP Fund	394,575	809,697	407,100	634,700	231,000	590,000	85,000	85,000	97,000	101,000
Capital Replacement Fund	50,400	-	-	-	-	-	-	-	-	-
Public Works Trust Fund Loans										
Revenue Bonds	-	-	-	-	-	-	-	-	-	-
Total	**$ 1,494,672**	**$ 3,344,235**	**$ 466,600**	**$ 914,600**	**$ 231,000**	**$ 1,465,000**	**$ 85,000**	**$ 85,000**	**$ 97,000**	**$ 101,000**

Sammamish Plateau Water
Water & Sewer Rate Model
Debt Service Schedules

Existing Debt Service - Debt Service Fund		2018	2019	2020	2021	2022	2023	2024	2025	2026	2027
2010 Revenue Bond - New Debt											
Water Utility Share of Debt Service:	74.00%										
Principal Payments		$ 75,000	$ 75,000	$ 75,000	$ 80,000	$ 85,000	$ 85,000	$ 90,000	$ 95,000		
Interest Payments		27,075	24,825	22,575	19,575	15,975	12,150	8,325	4,275		
Total Payments		$ 102,075	$ 99,825	$ 97,575	$ 99,575	$ 100,975	$ 97,150	$ 98,325	$ 99,275	$ -	$ -
Additional Coverage Required	1.25	$ 25,519	$ 24,956	$ 24,394	$ 24,894	$ 25,244	$ 24,288	$ 24,581	$ 24,819	$ -	$ -
Use of Bond Reserve for Final Payments											
2013 A & B Revenue Bonds (New Money)											
Water Utility Share of Debt Service:	74.00%										
Principal Payments		$ 225,000	$ 230,000	$ 240,000	$ 245,000	$ 255,000	$ 260,000	$ 270,000	$ 275,000	$ 285,000	$ 295,000
Interest Payments		75,300	72,950	63,750	56,550	49,200	41,550	33,750	25,650	17,400	8,850
Total Payments		$ 300,300	$ 302,950	$ 303,750	$ 301,550	$ 304,200	$ 301,550	$ 303,750	$ 300,650	$ 302,400	$ 303,850
Additional Coverage Required	1.25	$ 75,075	$ 75,738	$ 75,938	$ 75,388	$ 76,050	$ 75,388	$ 75,938	$ 75,163	$ 75,600	$ 75,963
Use of Bond Reserve for Final Payments											
2013 A & B Revenue Bonds (Refunding) - Water											
Water Utility Share of Debt Service:	100.00%										
Principal Payments		$ 1,501,813	$ 1,518,954								
Interest Payments		72,678	56,151								
Total Payments		$ 1,574,491	$ 1,575,105	$ -	$ -	$ -	$ -	$ -	$ -	$ -	$ -
Additional Coverage Required	1.25	$ 393,623	$ 393,776	$ -	$ -	$ -	$ -	$ -	$ -	$ -	$ -
Use of Bond Reserve for Final Payments											
2013 A & B Revenue Bonds (Refunding) - Sewer											
Water Utility Share of Debt Service:	0.00%										
Principal Payments		$ 1,093,187	$ 1,106,046								
Interest Payments		59,172	48,849								
Total Payments		$ 1,152,359	$ 1,154,895	$ -	$ -	$ -	$ -	$ -	$ -	$ -	$ -
Additional Coverage Required	1.25	$ 288,090	$ 288,724	$ -	$ -	$ -	$ -	$ -	$ -	$ -	$ -
Use of Bond Reserve for Final Payments											
Subtotal - Water											
Principal Payments		**$ 1,723,813**	**$ 1,744,654**	**$ 233,100**	**$ 240,500**	**$ 251,600**	**$ 255,300**	**$ 266,400**	**$ 273,800**	**$ 210,900**	**$ 218,300**
Interest Payments		**148,435**	**128,505**	**63,881**	**56,333**	**48,230**	**39,738**	**31,136**	**22,145**	**12,876**	**6,549**
Total Payments		**$ 1,872,249**	**$ 1,873,158**	**$ 296,981**	**$ 296,833**	**$ 299,830**	**$ 295,038**	**$ 297,536**	**$ 295,945**	**$ 223,776**	**$ 224,849**
Additional Coverage Required		**$ 468,062**	**$ 468,290**	**$ 74,245**	**$ 74,208**	**$ 74,957**	**$ 73,760**	**$ 74,384**	**$ 73,986**	**$ 55,944**	**$ 56,212**
Use of Bond Reserve for Final Payments		**$ -**	**$ -**	**$ -**	**$ -**	**$ -**	**$ -**	**$ -**	**$ -**	**$ -**	**$ -**
Subtotal - Sewer											
Principal Payments		**$ 1,171,187**	**$ 1,185,346**	**$ 81,900**	**$ 84,500**	**$ 88,400**	**$ 89,700**	**$ 93,600**	**$ 96,200**	**$ 74,100**	**$ 76,700**
Interest Payments		**85,790**	**74,270**	**22,445**	**19,793**	**16,946**	**13,962**	**10,940**	**7,781**	**4,524**	**2,301**
Total Payments		**$ 1,256,976**	**$ 1,259,617**	**$ 104,345**	**$ 104,293**	**$ 105,346**	**$ 103,662**	**$ 104,540**	**$ 103,981**	**$ 78,624**	**$ 79,001**
Additional Coverage Required		**$ 314,244**	**$ 314,904**	**$ 26,086**	**$ 26,073**	**$ 26,336**	**$ 25,916**	**$ 26,135**	**$ 25,995**	**$ 19,656**	**$ 19,750**
Use of Bond Reserve for Final Payments		**$ -**	**$ -**	**$ -**	**$ -**	**$ -**	**$ -**	**$ -**	**$ -**	**$ -**	**$ -**

Sammamish Plateau Water
Water & Sewer Rate Model
Debt Service Schedules

Existing Debt Service - Overdale Debt Service Fund		2018	2019	2020	2021	2022	2023	2024	2025	2026	2027
Overdale DWSRF Loan (DM12-952-111)											
Water Utility Share of Debt Service:	100.00%										
Principal Payments		$ 37,724	$ 37,724	$ 37,724	$ 37,724	$ 37,724	$ 37,724	$ 37,724	$ 37,724	$ 37,724	$ 37,724
Interest Payments		4,904	4,527	4,150	3,772	3,395	3,018	2,641	2,263	1,886	1,509
Total Payments		$ 42,628	$ 42,251	$ 41,874	$ 41,497	$ 41,119	$ 40,742	$ 40,365	$ 39,988	$ 39,610	$ 39,233
Additional Coverage Required	1.00	$ -	$ -	$ -	$ -	$ -	$ -	$ -	$ -	$ -	$ -
Use of Bond Reserve for Final Payments											
Subtotal - Water											
Principal Payments		**$ 37,724**	**$ 37,724**	**$ 37,724**	**$ 37,724**	**$ 37,724**	**$ 37,724**	**$ 37,724**	**$ 37,724**	**$ 37,724**	**$ 37,724**
Interest Payments		**4,904**	**4,527**	**4,150**	**3,772**	**3,395**	**3,018**	**2,641**	**2,263**	**1,886**	**1,509**
Total Payments		**$ 42,628**	**$ 42,251**	**$ 41,874**	**$ 41,497**	**$ 41,119**	**$ 40,742**	**$ 40,365**	**$ 39,988**	**$ 39,610**	**$ 39,233**
Additional Coverage Required		**$ -**	**$ -**	**$ -**	**$ -**	**$ -**	**$ -**	**$ -**	**$ -**	**$ -**	**$ -**
Use of Bond Reserve for Final Payments		**$ -**	**$ -**	**$ -**	**$ -**	**$ -**	**$ -**	**$ -**	**$ -**	**$ -**	**$ -**
Subtotal - Sewer											
Principal Payments		**$ -**	**$ -**	**$ -**	**$ -**	**$ -**	**$ -**	**$ -**	**$ -**	**$ -**	**$ -**
Interest Payments		**-**	**-**	**-**	**-**	**-**	**-**	**-**	**-**	**-**	**-**
Total Payments		**$ -**	**$ -**	**$ -**	**$ -**	**$ -**	**$ -**	**$ -**	**$ -**	**$ -**	**$ -**
Additional Coverage Required		**$ -**	**$ -**	**$ -**	**$ -**	**$ -**	**$ -**	**$ -**	**$ -**	**$ -**	**$ -**
Use of Bond Reserve for Final Payments		**$ -**	**$ -**	**$ -**	**$ -**	**$ -**	**$ -**	**$ -**	**$ -**	**$ -**	**$ -**

Sammamish Plateau Water
Water & Sewer Rate Model
Debt Service Schedules

Existing Debt Service - PWTF Loans		2018	2019	2020	2021	2022	2023	2024	2025	2026	2027
PWTF Loan PW-00-691-048 (Well 2 Improvement)											
Water Utility Share of Debt Service:	100.00%										
Principal Payments		$ 48,374	$ 48,374								
Interest Payments		967	484								
Total Payments		$ 49,342	$ 48,858	$ -	$ -	$ -	$ -	$ -	$ -	$ -	$ -
Additional Coverage Required	1.00	$ -	$ -	$ -	$ -	$ -	$ -	$ -	$ -	$ -	$ -
Use of Bond Reserve for Final Payments											
PWTF Loan PW-05-691-PRE-121 (Wells 4 & 11 Trmt)											
Water Utility Share of Debt Service:	100.00%										
Principal Payments		$ 30,197	$ 30,197	$ 30,197	$ 30,197	$ 30,197	$ 30,197	$ 30,197			
Interest Payments		1,057	906	755	604	453	302	151			
Total Payments		$ 31,254	$ 31,103	$ 30,952	$ 30,801	$ 30,650	$ 30,499	$ 30,348	$ -	$ -	$ -
Additional Coverage Required	1.00	$ -	$ -	$ -	$ -	$ -	$ -	$ -	$ -	$ -	$ -
Use of Bond Reserve for Final Payments											
PWTF Loan PW-06-962-036 (Wells 4 & 11 Treatment)											
Water Utility Share of Debt Service:	100.00%										
Principal Payments		$ 154,682	$ 154,682	$ 154,682	$ 154,682	$ 154,682	$ 154,682	$ 154,682	$ 154,682		
Interest Payments		6,187	5,414	4,640	3,867	3,094	2,320	1,547	773		
Total Payments		$ 160,869	$ 160,096	$ 159,322	$ 158,549	$ 157,775	$ 157,002	$ 156,229	$ 155,455	$ -	$ -
Additional Coverage Required	1.00	$ -	$ -	$ -	$ -	$ -	$ -	$ -	$ -	$ -	$ -
Use of Bond Reserve for Final Payments											
Subtotal - Water											
Principal Payments		**$ 233,253**	**$ 233,253**	**$ 184,879**	**$ 184,879**	**$ 184,879**	**$ 184,879**	**$ 184,879**	**$ 154,682**	**$ -**	**$ -**
Interest Payments		**8,212**	**6,804**	**5,395**	**4,471**	**3,547**	**2,622**	**1,698**	**773**	**-**	**-**
Total Payments		**$ 241,465**	**$ 240,057**	**$ 190,275**	**$ 189,350**	**$ 188,426**	**$ 187,501**	**$ 186,577**	**$ 155,455**	**$ -**	**$ -**
Additional Coverage Required		**$ -**	**$ -**	**$ -**	**$ -**	**$ -**	**$ -**	**$ -**	**$ -**	**$ -**	**$ -**
Use of Bond Reserve for Final Payments		**$ -**	**$ -**	**$ -**	**$ -**	**$ -**	**$ -**	**$ -**	**$ -**	**$ -**	**$ -**
Subtotal - Sewer											
Principal Payments		**$ -**	**$ -**	**$ -**	**$ -**	**$ -**	**$ -**	**$ -**	**$ -**	**$ -**	**$ -**
Interest Payments		**-**	**-**	**-**	**-**	**-**	**-**	**-**	**-**	**-**	**-**
Total Payments		**$ -**	**$ -**	**$ -**	**$ -**	**$ -**	**$ -**	**$ -**	**$ -**	**$ -**	**$ -**
Additional Coverage Required		**$ -**	**$ -**	**$ -**	**$ -**	**$ -**	**$ -**	**$ -**	**$ -**	**$ -**	**$ -**
Use of Bond Reserve for Final Payments		**$ -**	**$ -**	**$ -**	**$ -**	**$ -**	**$ -**	**$ -**	**$ -**	**$ -**	**$ -**

Sammamish Plateau Water
Water & Sewer Rate Model
Debt Service Schedules

New Debt Issuance	2018	2019	2020	2021	2022	2023	2024	2025	2026	2027
Allocation of Future Debt Issuance:										
Water	60.00%	60.00%	100.00%	100.00%	100.00%	100.00%	100.00%	100.00%	100.00%	100.00%
Sewer	40.00%	40.00%	0.00%	0.00%	0.00%	0.00%	0.00%	0.00%	0.00%	0.00%
Total	100.00%	100.00%	100.00%	100.00%	100.00%	100.00%	100.00%	100.00%	100.00%	100.00%
Public Works Trust Fund Loans										
Amount Issued	$ -	$ -	$ -	$ -	$ -	$ -	$ -	$ -	$ -	$ -
Revenue Bonds										
Net Proceeds Required	$ -	$ -	$ -	$ -	$ -	$ -	$ -	$ -	$ -	$ -
Plus: Issuance Cost	-	-	-	-	-	-	-	-	-	-
Plus: Reserve Requirement	-	-	-	-	-	-	-	-	-	-
Total Amount Issued	$ -	$ -	$ -	$ -	$ -	$ -	$ -	$ -	$ -	$ -

New Debt Service	2018	2019	2020	2021	2022	2023	2024	2025	2026	2027
Public Works Trust Fund Loans										
Principal Payments	$ -	$ -	$ -	$ -	$ -	$ -	$ -	$ -	$ -	$ -
Interest Payments	-	-	-	-	-	-	-	-	-	-
Total Payments	$ -	$ -	$ -	$ -	$ -	$ -	$ -	$ -	$ -	$ -
Revenue Bonds										
Principal Payments	$ -	$ -	$ -	$ -	$ -	$ -	$ -	$ -	$ -	$ -
Interest Payments	-	-	-	-	-	-	-	-	-	-
Total Payments	$ -	$ -	$ -	$ -	$ -	$ -	$ -	$ -	$ -	$ -
Additional Coverage Required	$ -	$ -	$ -	$ -	$ -	$ -	$ -	$ -	$ -	$ -
Use of Reserves for Final Payments	$ -	$ -	$ -	$ -	$ -	$ -	$ -	$ -	$ -	$ -
All New Debt										
Principal Payments	$ -	$ -	$ -	$ -	$ -	$ -	$ -	$ -	$ -	$ -
Interest Payments	-	-	-	-	-	-	-	-	-	-
Total Payments	$ -	$ -	$ -	$ -	$ -	$ -	$ -	$ -	$ -	$ -
Additional Coverage Required	$ -	$ -	$ -	$ -	$ -	$ -	$ -	$ -	$ -	$ -
Use of Reserves for Final Payments	$ -	$ -	$ -	$ -	$ -	$ -	$ -	$ -	$ -	$ -

Sammamish Plateau Water
Water & Sewer Rate Model
Debt Service Schedules

Total Debt Service By Utility	2018	2019	2020	2021	2022	2023	2024	2025	2026	2027
Water										
Existing Debt Service	$ 2,156,342	$ 2,155,467	$ 529,129	$ 527,679	$ 529,375	$ 523,282	$ 524,477	$ 491,387	$ 263,386	$ 264,082
New Debt Service	-	-	-	-	-	-	-	-	-	-
Total Payments	$ 2,156,342	$ 2,155,467	$ 529,129	$ 527,679	$ 529,375	$ 523,282	$ 524,477	$ 491,387	$ 263,386	$ 264,082
Total Principal Payments	$ 1,994,791	$ 2,015,632	$ 455,703	$ 463,103	$ 474,203	$ 477,903	$ 489,003	$ 466,206	$ 248,624	$ 256,024
Total Interest Payments	161,551	139,835	73,426	64,576	55,171	45,378	35,474	25,181	14,762	8,058
Total Payments	$ 2,156,342	$ 2,155,467	$ 529,129	$ 527,679	$ 529,375	$ 523,282	$ 524,477	$ 491,387	$ 263,386	$ 264,082
Debt Service Requiring Coverage	$ 1,872,249	$ 1,873,158	$ 296,981	$ 296,833	$ 299,830	$ 295,038	$ 297,536	$ 295,945	$ 223,776	$ 224,849
Additional Coverage Required	$ 468,062	$ 468,290	$ 74,245	$ 74,208	$ 74,957	$ 73,760	$ 74,384	$ 73,986	$ 55,944	$ 56,212
Use of Reserves for Final Payments	$ -	$ -	$ -	$ -	$ -	$ -	$ -	$ -	$ -	$ -
Sewer										
Existing Debt Service	$ 1,256,976	$ 1,259,617	$ 104,345	$ 104,293	$ 105,346	$ 103,662	$ 104,540	$ 103,981	$ 78,624	$ 79,001
New Debt Service	-	-	-	-	-	-	-	-	-	-
Total Payments	$ 1,256,976	$ 1,259,617	$ 104,345	$ 104,293	$ 105,346	$ 103,662	$ 104,540	$ 103,981	$ 78,624	$ 79,001
Total Principal Payments	$ 1,171,187	$ 1,185,346	$ 81,900	$ 84,500	$ 88,400	$ 89,700	$ 93,600	$ 96,200	$ 74,100	$ 76,700
Total Interest Payments	85,790	74,270	22,445	19,793	16,946	13,962	10,940	7,781	4,524	2,301
Total Payments	$ 1,256,976	$ 1,259,617	$ 104,345	$ 104,293	$ 105,346	$ 103,662	$ 104,540	$ 103,981	$ 78,624	$ 79,001
Debt Service Requiring Coverage	$ 1,256,976	$ 1,259,617	$ 104,345	$ 104,293	$ 105,346	$ 103,662	$ 104,540	$ 103,981	$ 78,624	$ 79,001
Additional Coverage Required	$ 314,244	$ 314,904	$ 26,086	$ 26,073	$ 26,336	$ 25,916	$ 26,135	$ 25,995	$ 19,656	$ 19,750
Use of Reserves for Final Payments	$ -	$ -	$ -	$ -	$ -	$ -	$ -	$ -	$ -	$ -

Sammamish Plateau Water
Water & Sewer Rate Model
Revenue Requirement Analysis

Cash Flow Sufficiency Test	2018	2019	2020	2021	2022	2023	2024	2025	2026	2027
Water:										
Expenses:										
Operating Expenses	$ 8,174,652	$ 9,148,662	$ 9,536,918	$ 10,116,924	$ 10,642,913	$ 11,207,785	$ 11,826,564	$ 12,414,578	$ 13,106,318	$ 13,743,618
Appropriations to Debt Service Fund	1,178,990	579,100	236,107	474,686	473,938	471,381	470,925	369,003	225,886	1,921
Appropriations to Capital Replacement Fund	5,600,910	5,925,500	7,069,000	7,302,000	7,543,000	7,792,000	8,049,000	8,315,000	8,589,000	8,872,000
Appropriations to CP Fund	1,105,127	4,782,782	1,436,862	659,459	433,667	889,828	1,350,308	853,288	471,951	355,057
Additions to Operating Fund	-	-	-	-	-	-	-	-	-	-
Total	$ 16,059,679	$ 20,436,043	$ 18,278,887	$ 18,553,068	$ 19,093,518	$ 20,360,994	$ 21,696,797	$ 21,951,869	$ 22,393,155	$ 22,972,597
Revenues:										
Water Rate Revenue at Existing Rates	$ 15,548,340	$ 14,886,818	$ 15,080,300	$ 15,276,298	$ 15,429,026	$ 15,583,280	$ 15,739,078	$ 15,896,433	$ 16,055,362	$ 16,215,880
Other Operating Revenues (Excluding Interest Earnings)	981,300	1,004,850	997,264	1,018,565	1,039,941	1,062,271	1,085,603	1,109,985	1,135,468	1,162,107
Operating Fund Interest Earnings	254,460	147,860	132,382	121,350	117,364	117,049	111,864	101,417	99,703	105,078
Appropriations from Overdale Debt Service Fund	34,160	34,160	34,160	34,160	34,160	34,160	34,160	34,160	34,160	34,160
Total	$ 16,818,260	$ 16,073,688	$ 16,244,106	$ 16,450,373	$ 16,620,491	$ 16,796,761	$ 16,970,704	$ 17,141,995	$ 17,324,693	$ 17,517,225
Net Cash Flow	**$ 758,581**	**$ (4,362,356)**	**$ (2,034,781)**	**$ (2,102,695)**	**$ (2,473,027)**	**$ (3,564,233)**	**$ (4,726,093)**	**$ (4,809,874)**	**$ (5,068,462)**	**$ (5,455,371)**
Sewer:										
Expenses:										
Operating Expenses	$ 3,882,153	$ 4,295,048	$ 4,550,312	$ 4,692,571	$ 4,909,715	$ 5,081,604	$ 5,351,968	$ 5,541,564	$ 5,854,713	$ 6,045,112
Metro Expenses	8,067,000	8,530,600	9,034,976	9,622,280	9,718,503	10,037,262	10,367,591	10,782,294	11,213,586	11,662,129
Appropriations to Debt Service Fund	-	-	427	51,488	51,611	51,178	51,337	38,851	38,818	-
Appropriations to Capital Replacement Fund	2,303,000	3,010,100	3,553,000	3,670,000	3,791,000	3,916,000	4,045,000	4,178,000	4,316,000	4,458,000
Appropriations to CP Fund	404,963	822,667	420,702	648,965	245,961	605,691	101,457	102,260	115,104	119,988
Additions to Operating Fund	-	-	-	-	-	-	-	-	-	-
Total	$ 14,657,116	$ 16,658,414	$ 17,559,418	$ 18,685,304	$ 18,716,790	$ 19,691,734	$ 19,917,352	$ 20,642,969	$ 21,538,220	$ 22,285,230
Revenues:										
Sewer Rate Revenue at Existing Rates	$ 6,650,342	$ 6,767,000	$ 6,902,307	$ 7,040,320	$ 7,110,706	$ 7,181,797	$ 7,253,598	$ 7,326,118	$ 7,399,362	$ 7,473,339
Metro Rate Revenue	8,476,380	8,857,820	9,034,976	9,622,280	9,718,503	10,037,262	10,367,591	10,782,294	11,213,586	11,662,129
Other Operating Revenues (Excluding Interest Earnings)	845,590	869,980	865,902	885,693	905,904	927,060	949,207	972,395	996,675	1,022,100
Operating Fund Interest Earnings	164,880	127,430	127,792	125,635	121,855	123,238	121,026	124,883	129,895	134,380
Appropriations from Overdale Debt Service Fund	-	-	-	-	-	-	-	-	-	-
Total	$ 16,137,192	$ 16,622,230	$ 16,930,976	$ 17,673,928	$ 17,856,968	$ 18,269,357	$ 18,691,422	$ 19,205,690	$ 19,739,518	$ 20,291,949
Net Cash Flow	**$ 1,480,076**	**$ (36,185)**	**$ (628,441)**	**$ (1,011,376)**	**$ (859,822)**	**$ (1,422,378)**	**$ (1,225,930)**	**$ (1,437,279)**	**$ (1,798,702)**	**$ (1,993,281)**

Sammamish Plateau Water
Water & Sewer Rate Model
Revenue Requirement Analysis

Coverage Sufficiency Test	2018	2019	2020	2021	2022	2023	2024	2025	2026	2027
Water:										
Expenses:										
Operating Expenses	$ 8,174,652	$ 9,148,662	$ 9,536,918	$ 10,116,924	$ 10,642,913	$ 11,207,785	$ 11,826,564	$ 12,414,578	$ 13,106,318	$ 13,743,618
Excise Taxes	696,599	678,826	704,000	713,381	715,973	723,436	730,991	738,641	746,387	754,232
Debt Service Requiring Coverage	1,872,249	1,873,158	296,981	296,833	299,830	295,038	297,536	295,945	223,776	224,849
Additional Coverage Required	468,062	468,290	74,245	74,208	74,957	73,760	74,384	73,986	55,944	56,212
Total	$ 11,211,562	$ 12,168,936	$ 10,612,144	$ 11,201,346	$ 11,733,673	$ 12,300,018	$ 12,929,475	$ 13,523,150	$ 14,132,426	$ 14,778,911
Revenues:										
Water Rate Revenue at Existing Rates	$ 15,548,340	$ 14,886,818	$ 15,080,300	$ 15,276,298	$ 15,429,026	$ 15,583,280	$ 15,739,078	$ 15,896,433	$ 16,055,362	$ 16,215,880
Other Operating Revenues	981,300	1,004,850	997,264	1,018,565	1,039,941	1,062,271	1,085,603	1,109,985	1,135,468	1,162,107
GFC Revenues	588,050	175,000	1,376,757	1,394,655	1,086,758	1,097,625	1,108,602	1,119,688	1,130,885	1,142,193
Interest Earnings (All Funds)	749,840	685,850	618,986	704,252	799,747	916,580	957,882	1,049,476	1,166,468	1,302,940
Total	$ 17,867,530	$ 16,752,518	$ 18,073,307	$ 18,393,770	$ 18,355,471	$ 18,659,757	$ 18,891,164	$ 19,175,581	$ 19,488,183	$ 19,823,121
Coverage Surplus (Deficit)	**$ 6,655,968**	**$ 4,583,582**	**$ 7,461,163**	**$ 7,192,425**	**$ 6,621,798**	**$ 6,359,739**	**$ 5,961,689**	**$ 5,652,431**	**$ 5,355,757**	**$ 5,044,210**
Coverage Ratio Realized	**4.81**	**3.70**	**26.37**	**25.48**	**23.34**	**22.81**	**21.29**	**20.35**	**25.18**	**23.68**
Sewer:										
Expenses:										
Operating Expenses	$ 11,949,153	$ 12,825,648	$ 13,585,288	$ 14,314,851	$ 14,628,218	$ 15,118,866	$ 15,719,559	$ 16,323,858	$ 17,068,299	$ 17,707,242
Excise Taxes	209,302	206,684	220,206	224,631	219,368	221,818	224,311	226,847	229,428	232,056
Debt Service Requiring Coverage	1,256,976	1,259,617	104,345	104,293	105,346	103,662	104,540	103,981	78,624	79,001
Additional Coverage Required	314,244	314,904	26,086	26,073	26,336	25,916	26,135	25,995	19,656	19,750
Total	$ 13,729,676	$ 14,606,852	$ 13,935,925	$ 14,669,848	$ 14,979,268	$ 15,470,262	$ 16,074,544	$ 16,680,681	$ 17,396,007	$ 18,038,049
Revenues:										
Sewer Rate Revenue at Existing Rates	$ 6,650,342	$ 6,767,000	$ 6,902,307	$ 7,040,320	$ 7,110,706	$ 7,181,797	$ 7,253,598	$ 7,326,118	$ 7,399,362	$ 7,473,339
Metro Rate Revenue	8,476,380	8,857,820	9,034,976	9,622,280	9,718,503	10,037,262	10,367,591	10,782,294	11,213,586	11,662,129
Other Operating Revenues	845,590	869,980	865,902	885,693	905,904	927,060	949,207	972,395	996,675	1,022,100
GFC Revenues	567,290	175,000	1,012,861	1,033,119	526,890	532,159	537,481	542,856	548,284	553,767
Interest Earnings (All Funds)	449,370	412,630	384,673	442,726	499,482	560,801	609,953	678,393	750,346	824,684
Total	$ 16,988,972	$ 17,082,430	$ 18,200,719	$ 19,024,137	$ 18,761,485	$ 19,239,079	$ 19,717,830	$ 20,302,056	$ 20,908,253	$ 21,536,020
Coverage Surplus (Deficit)	**$ 3,259,296**	**$ 2,475,578**	**$ 4,264,794**	**$ 4,354,289**	**$ 3,782,217**	**$ 3,768,817**	**$ 3,643,286**	**$ 3,621,375**	**$ 3,512,246**	**$ 3,497,971**
Coverage Ratio Realized	**3.84**	**3.22**	**42.12**	**43.00**	**37.15**	**37.61**	**36.10**	**36.08**	**45.92**	**45.53**

Sammamish Plateau Water
Water & Sewer Rate Model
Revenue Requirement Analysis

Water Rate Revenue Requirement	2018	2019	2020	2021	2022	2023	2024	2025	2026	2027
Maximum Deficit (Minimum Surplus)	$ (758,581)	$ 4,362,356	$ 2,034,781	$ 2,102,695	$ 2,473,027	$ 3,564,233	$ 4,726,093	$ 4,809,874	$ 5,068,462	$ 5,455,371
Adjustment for Taxes	-	-	-	-	-	-	-	-	-	-
Less: Net Revenue From Prior Rate Revenue Adjustments	-	-	(565,511)	(1,167,205)	(1,801,670)	(2,472,294)	(3,180,865)	(3,929,257)	(4,719,437)	(5,553,465)
Net Revenue Deficit (Surplus)	$ (758,581)	$ 4,362,356	$ 1,469,270	$ 935,491	$ 671,357	$ 1,091,939	$ 1,545,228	$ 880,617	$ 349,025	$ (98,094)
Effective Rate Revenue Adjustment Required	-4.88%	29.30%	9.39%	5.69%	3.90%	6.05%	8.17%	4.44%	1.68%	-0.45%
Annual Water Rate Revenue Adjustment Implemented	0.00%	3.75%	3.75%	3.75%	3.75%	3.75%	3.75%	3.75%	3.75%	3.75%
Cumulative Water Rate Revenue Adjustment Implemented	0.00%	3.75%	7.64%	11.68%	15.87%	20.21%	24.72%	29.39%	34.25%	39.28%
Post-Adjustment Summary:										
Rate Revenue	$ 15,548,340	$ 15,445,073	$ 16,232,529	$ 17,060,134	$ 17,876,847	$ 18,732,658	$ 19,629,440	$ 20,569,154	$ 21,553,854	$ 22,585,696
Net Cash Flow	$ 758,581	**$ (3,804,100)**	**$ (882,552)**	**$ (318,859)**	**$ (25,206)**	**$ (414,855)**	**$ (835,731)**	**$ (137,153)**	$ 430,030	$ 914,444
Coverage Ratio Realized	4.81	3.98	30.06	31.19	31.09	32.94	33.70	35.34	48.52	50.59
Coverage Ratio Required	*1.25*	*1.25*	*1.25*	*1.25*	*1.25*	*1.25*	*1.25*	*1.25*	*1.25*	*1.25*
Ending Operating Fund Balance	$ 14,394,659	$ 10,590,559	$ 9,708,007	$ 9,389,148	$ 9,363,942	$ 8,949,087	$ 8,113,356	$ 7,976,203	$ 8,406,233	$ 9,241,144
Minimum Operating Fund Balance Required	*$ 2,187,432*	*$ 2,423,216*	*$ 2,525,158*	*$ 2,670,486*	*$ 2,800,821*	*$ 2,941,945*	*$ 3,096,384*	*$ 3,243,259*	*$ 3,415,736*	*$ 3,574,812*
Original	*$ 11,280,447*	*$ 9,643,986*	*$ 8,513,659*	*$ 7,255,721*	*$ 7,127,568*	*$ 7,312,734*	*$ 7,534,334*	*$ 8,213,425*	*$ 9,127,112*	*$ 10,296,140*
Revised Before LIDP	*$ 12,131,344*	*$ 9,984,246*	*$ 9,279,385*	*$ 8,545,328*	*$ 9,048,827*	*$ 9,728,511*	*$ 10,292,833*	*$ 11,147,126*	*$ 12,051,651*	*$ 13,109,590*
Diff	*$ 2,263,316*	*$ 606,313*	*$ 428,622*	*$ 843,820*	*$ 315,115*	*$ (779,425)*	*$ (2,179,477)*	*$ (3,170,923)*	*$ (3,645,418)*	*$ (3,868,446)*

Sewer Rate Revenue Requirement	2018	2019	2020	2021	2022	2023	2024	2025	2026	2027
Maximum Deficit (Minimum Surplus)	$ (1,480,076)	$ 36,185	$ 628,441	$ 1,011,376	$ 859,822	$ 1,422,378	$ 1,225,930	$ 1,437,279	$ 1,798,702	$ 1,993,281
Adjustment for Taxes	-	-	-	-	-	-	-	-	-	-
Net Revenue From Prior Rate Adjustments	-	-	(224,325)	(465,057)	(716,070)	(980,142)	(1,257,857)	(1,549,820)	(1,856,667)	(2,179,058)
Net Revenue Deficit (Surplus)	$ (1,480,076)	$ 36,185	$ 404,116	$ 546,319	$ 143,752	$ 442,235	$ (31,926)	$ (112,541)	$ (57,965)	$ (185,777)
Effective Rate Adjustment Required	-22.26%	0.53%	5.67%	7.28%	1.84%	5.42%	-0.38%	-1.27%	-0.63%	-1.92%
Annual Sewer Rate Revenue Adjustment Implemented	0.00%	3.25%	3.25%	3.25%	3.25%	3.25%	3.25%	3.25%	3.25%	3.25%
Cumulative Sewer Rate Revenue Adjustment Implemented	0.00%	3.25%	6.61%	10.07%	13.65%	17.34%	21.15%	25.09%	29.16%	33.36%
Post-Adjustment Summary:										
Rate Revenue	$ 6,650,342	$ 6,986,927	$ 7,358,247	$ 7,749,302	$ 8,081,147	$ 8,427,202	$ 8,788,077	$ 9,164,406	$ 9,556,850	$ 9,966,100
Net Cash Flow	$ 1,480,076	$ 183,743	**$ (172,501)**	**$ (302,394)**	$ 110,618	**$ (176,972)**	$ 308,548	$ 401,009	$ 358,786	$ 499,480
Coverage Ratio Realized	3.84	3.39	46.38	49.62	46.13	49.31	50.40	53.30	72.65	76.26
Coverage Ratio Required	*1.25*	*1.25*	*1.25*	*1.25*	*1.25*	*1.25*	*1.25*	*1.25*	*1.25*	*1.25*
Ending Operating Fund Balance	$ 10,039,577	$ 10,223,320	$ 10,050,819	$ 9,748,425	$ 9,859,044	$ 9,682,071	$ 9,990,620	$ 10,391,629	$ 10,750,415	$ 11,249,894
Minimum Operating Fund Balance Required	$ 2,997,975	$ 3,213,452	$ 3,404,095	$ 3,585,078	$ 3,661,049	$ 3,782,634	$ 3,931,365	$ 4,080,996	$ 4,265,193	$ 4,423,389
Revised Before LIDP	$ 8,184,477	$ 9,290,286	$ 9,479,520	$ 9,630,468	$ 9,588,724	$ 9,938,340	$ 10,240,044	$ 10,702,188	$ 11,118,872	$ 11,472,015
Diff	$ 1,855,100	$ 933,034	$ 571,300	$ 117,958	$ 270,319	$ (256,269)	$ (249,424)	$ (310,559)	$ (368,458)	$ (222,120)

Joint Utility Revenue Requirement Summary	2018	2019	2020	2021	2022	2023	2024	2025	2026	2027
Coverage Ratio Realized	4.42	3.74	34.30	35.98	35.00	37.20	38.04	40.01	54.79	57.26
Coverage Ratio Required	*1.25*	*1.25*	*1.25*	*1.25*	*1.25*	*1.25*	*1.25*	*1.25*	*1.25*	*1.25*
Ending Operating Fund Balance	$ 24,434,236	$ 20,813,879	$ 19,758,827	$ 19,137,573	$ 19,222,986	$ 18,631,158	$ 18,103,976	$ 18,367,831	$ 19,156,647	$ 20,491,039
Minimum Operating Fund Balance Required	*$ 5,185,407*	*$ 5,636,668*	*$ 5,929,253*	*$ 6,255,564*	*$ 6,461,870*	*$ 6,724,579*	*$ 7,027,749*	*$ 7,324,255*	*$ 7,680,929*	*$ 7,998,201*

Sammamish Plateau Water
2018 Water GFC Calculation
Connection Charge Schedule

Charge Based on Meter Size	# of ERUs	Water GFC Structure	
		Current	Updated
3/4" Meter	1.00	$ 5,342	$ 5,231
1" Meter	2.50	$ 13,355	$ 13,077
1-1/2" Meter	5.00	$ 26,710	$ 26,155
2" Meter	8.00	$ 42,736	$ 41,848
3" Meter	16.00	$ 85,472	$ 83,695
4" Meter	25.00	$ 133,550	$ 130,774
6" Meter	50.00	$ 267,100	$ 261,548
8" Meter	80.00	$ 427,360	$ 418,476
10" Meter	115.00	$ 614,330	$ 601,559

Sammamish Plateau Water
2018 Water GFC Calculation
General Facilities Charge Calculation

Calculation Year:	2018	Supply	Storage	Treatment	Mains	Pumping	Meters & Services	Hydrants	General	Total
Existing Cost Basis:										
Plant-In-Service as of Year-End 2017		$ 10,850,719	$ 18,185,137	$ 6,347,035	$ 79,370,001	$ 3,658,564	$ 13,617,120	$ 7,201,295	$ 16,435,707	$ 155,665,578
Less: Contributed Assets		-	(59,884)	-	(45,629,767)	(18,672)	(8,796,939)	(5,258,489)	(22,117)	(59,785,868)
Less: Provision for Asset Retirements Due to 10-Year CIP		(365,379)	-	-	(115,640)	-	(19,401)	-	(1,415,625)	(1,916,045)
Less: Assets Not Included In GFC Cost Basis		-	-	-	-	-	(4,800,780)	-	-	(4,800,780)
Plus: Interest Accrued on Net Asset Base		5,313,634	9,828,129	2,661,670	17,755,939	1,654,397	-	1,126,053	5,459,488	43,799,310
Plus: Construction Work In Progress		-	-	-	1,357,695	180,512	-	-	4,589	1,542,796
Less: Net Outstanding Debt Principal		-	-	-	-	-	-	-	-	-
Net Existing Cost Basis		$ 15,798,975	$ 27,953,382	$ 9,008,705	$ 52,738,227	$ 5,474,802	$ -	$ 3,068,859	$ 20,462,041	$ 134,504,991
Future Cost Basis:										
Capital Improvement Program		$ 5,833,000	$ 9,656,386	$ -	$ 35,747,345	$ 41,781	$ -	$ -	$ 5,199,204	$ 56,477,716
Less: Grant Funding										-
Less: Costs Funded by LFCs		-	-	-	(3,819,440)	-	-	-	-	(3,819,440)
Less: Costs Funded by DEAs/ULIDs		-	(420,000)	-	(25,966,750)	-	-	-	-	(26,386,750)
Net Future Cost Basis		$ 5,833,000	$ 9,236,386	$ -	$ 5,961,155	$ 41,781	$ -	$ -	$ 5,199,204	$ 26,271,526
Customer Base in Equivalent Residential Units (ERUs):										
Existing ERUs		24,306	24,306	24,306	24,306	24,306	24,306	24,306	24,306	
Projected Growth Over Useful Life of Assets		3,412	8,700	5,012	8,509	5,012	3,412	7,362	2,919	
Total Number of ERUs		27,717	33,006	29,318	32,815	29,318	27,717	31,668	27,225	
Useful Life of Assets		20 Years	120 Years	40 Years	96 Years	40 Years	20 Years	75 Years	10 Years	
Calculated GFC per ERU		$ 780	$ 1,127	$ 307	$ 1,789	$ 188	$ -	$ 97	$ 943	$ 5,231

Sammamish Plateau Water
2018 Water GFC Calculation
Inventory of Utility Plant-In-Service

Summary of Plant-In-Service

Asset Category	Original Cost - Water				Original Cost - Water Utility Funded Assets			
	Existing Customers	10-Year Growth	Other Growth	Total	Existing Customers	10-Year Growth	Other Growth	Total
Supply	$ 8,033,786	$ 1,124,139	$ 1,692,794	$ 10,850,719	$ 8,033,786	$ 1,124,139	$ 1,692,794	$ 10,850,719
Storage	13,643,044	1,915,207	2,626,886	18,185,137	13,596,173	1,908,627	2,620,453	18,125,253
Treatment	4,618,344	648,322	1,080,369	6,347,035	4,618,344	648,322	1,080,369	6,347,035
Mains	57,767,014	8,108,448	13,494,539	79,370,001	24,647,074	3,459,079	5,634,081	33,740,234
Pumping	2,655,534	372,783	630,246	3,658,564	2,641,981	370,881	627,030	3,639,892
Meters & Services	13,605,498	4,319	7,303	13,617,120	4,808,559	4,319	7,303	4,820,181
Hydrants	7,190,554	4,402	6,339	7,201,295	1,932,065	4,402	6,339	1,942,806
General	13,768,301	1,913,112	754,294	16,435,707	13,751,070	1,911,110	751,411	16,413,590
Total	**$ 121,282,076**	**$ 14,090,733**	**$ 20,292,770**	**$ 155,665,578**	**$ 74,029,052**	**$ 9,430,880**	**$ 12,419,778**	**$ 95,879,710**

Allocation of Assets to Customers	Percent of Total Cost			Allocated Total Cost		
	Existing	10-Year Growth	Other Growth	Existing	10-Year Growth	Other Growth
All to Existing	100.00%	0.00%	0.00%	$ 20,727,396	$ -	$ -
All to Growth	0.00%	37.17%	62.83%	$ -	$ -	$ -
% of Existing Source Capacity	72.58%	10.19%	17.23%	$ 73,703,469	$ 10,346,475	$ 17,492,274
% of Existing Storage Capacity	72.58%	10.19%	17.23%	$ 11,068,349	$ 1,553,772	$ 2,626,886
% of Existing Flow Capacity			100.00%	$ -	$ -	$ -
% of Treatment Capacity			100.00%	$ -	$ -	$ -
Buildout ERU Capacity	87.69%	12.31%	0.00%	$ 5,993,036	$ 841,301	$ -
10-Year ERU Forecast	87.69%	12.31%	0.00%	$ 8,752,226	$ 1,228,635	$ -
[Other Basis #1]			100.00%	$ -	$ -	$ -
[Other Basis #2]			100.00%	$ -	$ -	$ -
[Other Basis #3]			100.00%	$ -	$ -	$ -
As All Other	77.91%	9.05%	13.04%	$ 1,037,600	$ 120,550	$ 173,610
				$ 121,282,076	**$ 14,090,733**	**$ 20,292,770**

Asset Category	Accrued Interest - Water				Accrued Interest - Water Utility Funded Assets			
	Existing Customers	10-Year Growth	Other Growth	Total	Existing Customers	10-Year Growth	Other Growth	Total
Supply	$ 3,947,978	$ 552,615	$ 813,041	$ 5,313,634	$ 3,947,978	$ 552,615	$ 813,041	$ 5,313,634
Storage	7,390,187	1,037,433	1,440,635	9,868,254	7,358,571	1,032,994	1,436,564	9,828,129
Treatment	1,937,069	271,925	452,675	2,661,670	1,937,069	271,925	452,675	2,661,670
Mains	26,192,827	3,676,420	6,157,285	36,026,531	12,931,288	1,814,769	3,009,882	17,755,939
Pumping	1,209,404	169,776	287,032	1,666,212	1,200,829	168,572	284,996	1,654,397
Meters & Services	5,883,244	1,169	1,976	5,886,389	2,567,432	1,169	1,976	2,570,577
Hydrants	3,330,488	2,464	3,548	3,336,501	1,120,041	2,464	3,548	1,126,053
General	4,609,447	637,510	233,417	5,480,373	4,593,175	635,619	230,694	5,459,488
Total	**$ 54,500,645**	**$ 6,349,311**	**$ 9,389,608**	**$ 70,239,564**	**$ 35,656,383**	**$ 4,480,127**	**$ 6,233,378**	**$ 46,369,887**

Sammamish Plateau Water
2018 Water GFC Calculation
Debt Service Schedules

Existing Debt Service		2018	2019	2020	2021	2022	2023	2024	2025	2026	2027	2028	2029	2030
2010 Revenue Bond - New Debt														
Water Share	74.00%													
Principal Payments		$ 75,000	$ 75,000	$ 75,000	$ 80,000	$ 85,000	$ 85,000	$ 90,000	$ 95,000					
Interest Payments		27,075	24,825	22,575	19,575	15,975	12,150	8,325	4,275					
Total Payments		$ 102,075	$ 99,825	$ 97,575	$ 99,575	$ 100,975	$ 97,150	$ 98,325	$ 99,275	$ -	$ -	$ -	$ -	$ -
Outstanding Balance at Year-End		$ 585,000	$ 510,000	$ 435,000	$ 355,000	$ 270,000	$ 185,000	$ 95,000	$ -	$ -	$ -	$ -	$ -	$ -
2013 A & B Revenue Bonds (New Money)														
Water Share	74.00%													
Principal Payments		$ 225,000	$ 230,000	$ 240,000	$ 245,000	$ 255,000	$ 260,000	$ 270,000	$ 275,000	$ 285,000	$ 295,000			
Interest Payments		75,300	72,950	63,750	56,550	49,200	41,550	33,750	25,650	17,400	8,850			
Total Payments		$ 300,300	$ 302,950	$ 303,750	$ 301,550	$ 304,200	$ 301,550	$ 303,750	$ 300,650	$ 302,400	$ 303,850	$ -	$ -	$ -
Outstanding Balance at Year-End		$ 2,355,000	$ 2,125,000	$ 1,885,000	$ 1,640,000	$ 1,385,000	$ 1,125,000	$ 855,000	$ 580,000	$ 295,000	$ -	$ -	$ -	$ -
2013 A & B Revenue Bonds (Refunding)														
Water Share	100.00%													
Principal Payments		$ 1,501,813	$ 1,518,954											
Interest Payments		72,678	56,151											
Total Payments		$ 1,574,491	$ 1,575,105	$ -	$ -	$ -	$ -	$ -	$ -	$ -	$ -	$ -	$ -	$ -
Outstanding Balance at Year-End		$ 1,518,954	$ -	$ -	$ -	$ -	$ -	$ -	$ -	$ -	$ -	$ -	$ -	$ -
Overdale DWSRF Loan (DM12-952-111)														
Water Share	100.00%													
Principal Payments		$ 37,724	$ 37,724	$ 37,724	$ 37,724	$ 37,724	$ 37,724	$ 37,724	$ 37,724	$ 37,724	$ 37,724	$ 37,724	$ 37,724	$ 37,724
Interest Payments		4,904	4,527	4,150	3,772	3,395	3,018	2,641	2,263	1,886	1,509	1,132	754	377
Total Payments		$ 42,628	$ 42,251	$ 41,874	$ 41,497	$ 41,119	$ 40,742	$ 40,365	$ 39,988	$ 39,610	$ 39,233	$ 38,856	$ 38,479	$ 38,101
Outstanding Balance at Year-End		$ 452,691	$ 414,967	$ 377,242	$ 339,518	$ 301,794	$ 264,070	$ 226,345	$ 188,621	$ 150,897	$ 113,173	$ 75,448	$ 37,724	$ -
PWTF Loan PW-00-691-048 (Well 2 Improvement)														
Water Share	100.00%													
Principal Payments		$ 48,374	$ 48,374											
Interest Payments		967	484											
Total Payments		$ 49,342	$ 48,858	$ -	$ -	$ -	$ -	$ -	$ -	$ -	$ -	$ -	$ -	$ -
Outstanding Balance at Year-End		$ 48,374	$ -	$ -	$ -	$ -	$ -	$ -	$ -	$ -	$ -	$ -	$ -	$ -
PWTF Loan PW-05-691-PRE-121 (Wells 4 & 11 Trmt)														
Water Share	100.00%													
Principal Payments		$ 30,197	$ 30,197	$ 30,197	$ 30,197	$ 30,197	$ 30,197	$ 30,197						
Interest Payments		1,057	906	755	604	453	302	151						
Total Payments		$ 31,254	$ 31,103	$ 30,952	$ 30,801	$ 30,650	$ 30,499	$ 30,348	$ -	$ -	$ -	$ -	$ -	$ -
Outstanding Balance at Year-End		$ 181,184	$ 150,987	$ 120,789	$ 90,592	$ 60,395	$ 30,197	$ -	$ -	$ -	$ -	$ -	$ -	$ -
PWTF Loan PW-06-962-036 (Wells 4 & 11 Treatment)														
Water Share	100.00%													
Principal Payments		$ 154,682	$ 154,682	$ 154,682	$ 154,682	$ 154,682	$ 154,682	$ 154,682	$ 154,682					
Interest Payments		6,187	5,414	4,640	3,867	3,094	2,320	1,547	773					
Total Payments		$ 160,869	$ 160,096	$ 159,322	$ 158,549	$ 157,775	$ 157,002	$ 156,229	$ 155,455	$ -	$ -	$ -	$ -	$ -
Outstanding Balance at Year-End		$ 1,082,773	$ 928,091	$ 773,409	$ 618,727	$ 464,045	$ 309,364	$ 154,682	$ -	$ -	$ -	$ -	$ -	$ -

Summary of Existing Debt Service	2018	2019	2020	2021	2022	2023	2024	2025	2026	2027	2028	2029	2030
Water Share of Annual Debt Service													
Principal Payments	$ 1,994,791	$ 2,015,632	$ 455,703	$ 463,103	$ 474,203	$ 477,903	$ 489,003	$ 466,206	$ 248,624	$ 256,024	$ 37,724	$ 37,724	$ 37,724
Interest Payments	161,551	139,835	73,426	64,576	55,171	45,378	35,474	25,181	14,762	8,058	1,132	754	377
Total Payments	$ 2,156,342	$ 2,155,467	$ 529,129	$ 527,679	$ 529,375	$ 523,282	$ 524,477	$ 491,387	$ 263,386	$ 264,082	$ 38,856	$ 38,479	$ 38,101
Outstanding Balance at Year-End	$ 5,459,576	$ 3,443,944	$ 2,988,241	$ 2,525,137	$ 2,050,934	$ 1,573,031	$ 1,084,027	$ 617,821	$ 369,197	$ 113,173	$ 75,448	$ 37,724	$ -

Sammamish Plateau Water
2018 Water GFC Calculation
Summary of Cash Balances

Fund Balances as of **12/31/2017**

	Water	Sewer	Total
Operating Fund	$ 13,636,078	$ 8,559,501	$ 22,195,579
Capital Replacement Fund	20,153,903	8,732,198	28,886,101
General Facilities Charge Fund	7,585,138	3,822,407	11,407,545
Local Facilities Charge Fund	2,438,486	4,571,097	7,009,583
Bond Fund / Bond Reserve	1,567,744	1,993,593	3,561,337
Total	**$ 45,381,349**	**$ 27,678,796**	**$ 73,060,145**

Sammamish Plateau Water
2018 Water GFC Calculation
Inventory of Construction Work In Progress

Summary of Construction Work In Progress

Function	Construction Work In Progress: Existing Customers	10-Year Growth	Other Growth	Total
Supply	$ -	$ -	$ -	$ -
Storage	152,874	21,460	36,282	210,617
Treatment	-	-	-	-
Mains	1,470,563	206,437	349,013	2,026,013
Pumping	131,023	18,393	31,096	180,512
Meters & Services	5,301,606	-	-	5,301,606
Hydrants	-	-	-	-
General	110,749	15,112	21,832	147,693
Total	**$ 7,166,815**	**$ 261,403**	**$ 438,224**	**$ 7,866,442**

Allocation of Assets to Customers	Percent of Total Cost: Existing Customers	10-Year Growth	Other Growth	Allocated Total Cost: Existing Customers	10-Year Growth	Other Growth	Total
All to Existing	100.00%	0.00%	0.00%	$ 5,301,606	$ -	$ -	$ 5,301,606
All to Growth	0.00%	37.24%	62.76%	$ -	$ -	$ -	$ -
% of Existing Source Capacity	72.58%	10.19%	17.23%	$ 1,692,498	$ 237,592	$ 401,686	$ 2,331,776
% of Existing Storage Capacity	72.58%	10.19%	17.23%	$ 152,874	$ 21,460	$ 36,282	$ 210,617
Buildout ERU Capacity	87.69%	12.31%	0.00%	$ -	$ -	$ -	$ -
10-Year ERU Forecast	87.69%	12.31%	0.00%	$ 15,656	$ 2,198	$ -	$ 17,854
[Other Basis #1]			100.00%	$ -	$ -	$ -	$ -
[Other Basis #2]			100.00%	$ -	$ -	$ -	$ -
As All Other	91.11%	3.32%	5.57%	$ 4,181	$ 152	$ 256	$ 4,589
				$ 7,166,815	**$ 261,403**	**$ 438,224**	**$ 7,866,442**
						Check:	$ -

Schedule of Construction Work In Progress

Project ID	Description	% Water	% Sewer	Function	Original Cost	Allocation Basis	Allocation of Construction Work In Progress: Existing Customers	10-Year Growth	Other Growth	Total
	Security Improvements	60%	40%	General	$ 29,756	10-Year ERU Forecast	$ 15,656	$ 2,198	$ -	$ 17,854
	SE 52nd @ 229th SE AC Water Main Replacement	100%	0%	Mains	$ 82,340	% of Existing Source Capacity	$ 59,766	$ 8,390	$ 14,184	$ 82,340
	7MG & 297 Tank Seismic Retrofit	100%	0%	Storage	$ 210,617	% of Existing Storage Capacity	$ 152,874	$ 21,460	$ 36,282	$ 210,617
	221st Way SE Water Main Replacement	100%	0%	Mains	$ 529,601	% of Existing Source Capacity	$ 384,406	$ 53,963	$ 91,232	$ 529,601
	SE 62nd & 221st Place SE Water and Sewer Replacement	60%	40%	Mains	$ 93,962	% of Existing Source Capacity	$ 40,921	$ 5,744	$ 9,712	$ 56,377
	Water Comprehensive Plan	100%	0%	General	$ -	As All Other	$ -	$ -	$ -	$ -
	Water Hydraulic Model	100%	0%	General	$ 125,251	% of Existing Source Capacity	$ 90,912	$ 12,762	$ 21,576	$ 125,251
	Issaquah-Fall City Road 16" Transmission Main	100%	0%	Mains	$ 12,797	% of Existing Source Capacity	$ 9,288	$ 1,304	$ 2,204	$ 12,797
	2017 Seismic Pipeline Study Well 9 to 650	100%	0%	Mains	$ 117,146	% of Existing Source Capacity	$ 85,029	$ 11,936	$ 20,180	$ 117,146
	Seismic Retrofit Program	60%	40%	General	$ 7,648	As All Other	$ 4,181	$ 152	$ 256	$ 4,589
	N Inglewood Pressure Zone Modification/Inglewood Hill Rd @ 211th Place NE Water Main Repl.	100%	0%	Mains	$ 100,687	% of Existing Source Capacity	$ 73,083	$ 10,259	$ 17,345	$ 100,687
	211th to 212th Inglewood Hill Road	100%	0%	Mains	$ 934,225	% of Existing Source Capacity	$ 678,099	$ 95,191	$ 160,935	$ 934,225
	AMI Automatic Meter Infrastructure	100%	0%	Meters & Services	$ 5,301,606	All to Existing	$ 5,301,606	$ -	$ -	$ 5,301,606
	New 297 Booster Pump	100%	0%	Pumping	$ 180,512	% of Existing Source Capacity	$ 131,023	$ 18,393	$ 31,096	$ 180,512
	Sorrento Estates Transmission Main	100%	0%	Mains	$ 26,731	% of Existing Source Capacity	$ 19,402	$ 2,724	$ 4,605	$ 26,731
	212th Way SE Road Improvements Water	100%	0%	Mains	$ 37,160	% of Existing Source Capacity	$ 26,972	$ 3,786	$ 6,401	$ 37,160
	Sammamish Town Center SE 4th Street Water & Sewer	60%	40%	Mains	$ 214,914	% of Existing Source Capacity	$ 93,596	$ 13,139	$ 22,213	$ 128,948
			100%			As All Other	$ -	$ -	$ -	$ -
			100%			As All Other	$ -	$ -	$ -	$ -
			100%			As All Other	$ -	$ -	$ -	$ -
			100%			As All Other	$ -	$ -	$ -	$ -

Sammamish Plateau Water
2018 Water GFC Calculation
Capital Improvement Program

Capital Improvement Program (Current Dollars)

				2018 - 2027	Planned Funding Source				
Project ID	Description	Function	% R&R	10-Year Cost (Current Dollars)	GFC Fund	LFC Fund	Other District Resources	DEA/ULID	Total
C-1	District Headquarters Maintenance Program	General	50.00%	$ 383,835			100.00%		100.00%
C-2	Enterprise Level System Replacement Program	General	100.00%	$ 315,000			100.00%		100.00%
C-3	Computerized Maintenance Management System	General	0.00%	$ 201,000			100.00%		100.00%
C-4	District Headquarters Communications Rewiring	General	50.00%	$ 96,000			100.00%		100.00%
C-5	Miscellaneous Capital Projects	General	0.00%	$ 585,000			100.00%		100.00%
C-6	Security Improvements	General	0.00%	$ 144,570			100.00%		100.00%
C-7	Vehicles and Large Equipment (General)	General	50.00%	$ 121,500			100.00%		100.00%
C-8	District Headquarters Facility Expansion	General	0.00%	$ 1,300,000	70.00%		30.00%		100.00%
G-1	AMR/AMI	Meters & Services	100.00%	$ 31,284			100.00%		100.00%
G-2	Smart Water Infrastructure	General	0.00%	$ 400,000			100.00%		100.00%
G-3	Vehicles and Large Equipment (Water)	General	50.00%	$ 1,566,463			100.00%		100.00%
G-4	Water Hydraulic Model	General	0.00%	$ 55,836	30.00%		70.00%		100.00%
G-5	Water Comprehensive Plan	General	100.00%	$ -	100.00%				100.00%
G-6	550 Zone Study (Conversion to Blended Supply)	General	0.00%	$ 30,000			100.00%		100.00%
G-7	700 SH Zone Study (Conversion to 550 & 590 Zones)	General	0.00%	$ -			100.00%		100.00%
W-1	Well 9 Pump and Motor Upgrade for Wells 7, 8 and 9 Well Field	Supply	100.00%	$ 550,000	15.00%		85.00%		100.00%
W-2	Well 9 PFC Treatment	Supply	0.00%	$ 4,881,000	100.00%				100.00%
W-3	Well 13 Pump Enclosure	Supply	0.00%	$ 402,000	30.00%		70.00%		100.00%
BP-1	SE 43rd Booster Pump Station Rehabilitation	Pumping	100.00%	$ -			100.00%		100.00%
BP-2	New 297 Booster Pump	Pumping	0.00%	$ 41,781	30.00%		70.00%		100.00%
	Well 9 to 650 Zone Booster Pump Station (see Project M-8)	Pumping	0.00%	$ -	100.00%				100.00%
	2 MG Booster Pump Station (see Project ST-11)	Pumping	0.00%	$ -	100.00%				100.00%
ST-1	Reservoir Safety Improvements	Storage	0.00%	$ 400,000	30.00%		70.00%		100.00%
ST-2	3 MG Replace Interior and Top Coating	Storage	0.00%	$ 840,000	15.00%		35.00%	50.00%	100.00%
ST-3	3 MG Replace Exterior Coating (2035)	Storage	0.00%	$ -	15.00%		85.00%		100.00%
ST-4	Section 36 East Tank Interior Coating	Storage	0.00%	$ 730,000	30.00%		70.00%		100.00%
ST-5	Section 36 East Tank Exterior Top Coating (2030)	Storage	0.00%	$ -	30.00%		70.00%		100.00%
ST-6	Section 36 West Tank Exterior Top Coating and Interior (2030)	Storage	0.00%	$ -	30.00%		70.00%		100.00%
ST-7	Section 36 East Tank Exterior and Interior Replace Coating (2045)	Storage	0.00%	$ -	30.00%		70.00%		100.00%
ST-8	Section 36 West Tank Exterior Replace Coating (2040)	Storage	0.00%	$ -	30.00%		70.00%		100.00%
ST-9	2 MG Interior and Exterior Tank Coating	Storage	0.00%	$ 1,593,000	30.00%		70.00%		100.00%
ST-10	2 MG Tank Improvement	Storage	0.00%	$ 1,739,000	30.00%		70.00%		100.00%
ST-11	2 MG Booster Pump Station	Storage	0.00%	$ 475,000	100.00%				100.00%
ST-12	10 MG Reservoir (Future)	Storage	0.00%	$ -	100.00%				100.00%
ST-13	7 MG & 297 Tank Seismic Retrofit	Storage	0.00%	$ 1,279,386			100.00%		100.00%
ST-14	7 MG Tank Exterior Coating	Storage	0.00%	$ 980,000	30.00%		70.00%		100.00%
ST-15	7 MG Interior Coating	Storage	0.00%	$ 760,000	30.00%		70.00%		100.00%
ST-16	7 MG Exterior Coating (2035)	Storage	0.00%	$ -	30.00%		70.00%		100.00%
ST-17	297 Tank Coating (exterior top coat, interior replace)	Storage	0.00%	$ 610,000	30.00%		70.00%		100.00%
ST-18	297 Tank Coating (2035 exterior replace coating)	Storage	0.00%	$ -	30.00%		70.00%		100.00%
ST-19	Well 12 Tank Top Coating and Interior	Storage	0.00%	$ 250,000	30.00%		70.00%		100.00%
ST-20	Well 12 Tank Replace Exterior Coating (2037)	Storage	0.00%	$ -	30.00%		70.00%		100.00%
ST-21	Well 12 Reclaim Tank Replace Interior and Exterior Coating (2030)	Storage	0.00%	$ -	30.00%		70.00%		100.00%
M-1	Zackuse Creek Fish Passage Culvert Main Replacement - 8"	Mains	100.00%	$ 25,001			100.00%		100.00%
M-2	216th Ave SE and Main Street Replacement - 8" & 12"	Mains	30.82%	$ -	17.00%	83.00%			100.00%
M-3	Main Street from 216th to 218th Replacement (Flynn 218th SE Plat DEA) - 12"	Mains	25.00%	$ 200,000	17.00%			83.00%	100.00%

Sammamish Plateau Water
2018 Water GFC Calculation
Capital Improvement Program

Capital Improvement Program (Current Dollars)

				2018 - 2027	Planned Funding Source				
Project ID	Description	Function	% R&R	10-Year Cost (Current Dollars)	GFC Fund	LFC Fund	Other District Resources	DEA/ULID	Total
M-4	SE 8th from 212th to 218th Ave SE Replacement - 12"	Mains	31.45%	$ 1,090,000	17.00%	83.00%			100.00%
M-5	228th Avenue SE 24" Transmission Main/Replacement	Mains	25.00%	$ 934,000	100.00%				100.00%
M-6	Sorrento Estates 24" Transmission Main	Mains	0.00%	$ 726,360	100.00%				100.00%
M-7	Issaquah Fall City Rd 16" Transmission Main/Replacement	Mains	25.00%	$ 649,814	100.00%				100.00%
M-8	Well 9 to 650 Zone 16" Transmission Main and Booster Pump Station	Mains	0.00%	$ 250,000	100.00%				100.00%
M-9	Redmond-Fall City Rd/Ames Lake Rd 8" 12" Transmission Main	Mains	0.00%	$ -	100.00%				100.00%
M-10	Distribution System Connectivity and Extension Program5	Mains	0.00%	$ -		100.00%			100.00%
FF-1	NE 27th Pl/NE 29th St PRV Addition and Main Connection - 8"	Mains	0.00%	$ 848,000				100.00%	100.00%
FF-2	212th Ave NE from NE 14th to NE 16th AC Replacement - 8"	Mains	56.25%	$ -			100.00%		100.00%
FF-3	NE 11th St and 209th Ave Replacement - 8"	Mains	56.25%	$ -			100.00%		100.00%
FF-4	N Inglewood Pressure Zone Modification Connection - 8"	Mains	0.00%	$ 471,590			100.00%		100.00%
FF-5	216th Ave NE PRV Addition	Mains	0.00%	$ 217,000	100.00%				100.00%
FF-6	SE 1st St/222nd PL SE in Town Center and 228th Ave SE to Sammamish Commons Connection - 1	Mains	0.00%	$ 2,745,000				100.00%	100.00%
FF-7	Sammamish Town Center SE 4th St Replacement - 12"	Mains	44.44%	$ 917,730	6.00%	63.00%	31.00%		100.00%
FF-8	Plateau Club Replacement - 12"	Mains	25.00%	$ -				100.00%	100.00%
FF-9	SE 14th St Main Connection - 8"	Mains	0.00%	$ -			100.00%		100.00%
FF-10	SE 16th St PRV Addition and SE 17th St Main Connection - 8"	Mains	0.00%	$ 545,000	26.00%	74.00%			100.00%
FF-11	Waverly Hills PRV Addition and Main Replacement - 8"	Mains	100.00%	$ -			100.00%		100.00%
FF-12	Waverly Shores Connection - 8"	Mains	0.00%	$ -				100.00%	100.00%
FF-13	Overdale 232nd Ave SE and SE 54th Pl Fire Flow Connection - 8"	Mains	0.00%	$ -			100.00%		100.00%
FF-14	NE 80th St Connection - 12"	Mains	0.00%	$ 1,283,000	17.00%	83.00%			100.00%
FF-15	NE 70th St Replacement - 12"	Mains	44.44%	$ -	17.00%	83.00%			100.00%
FF-16	NE Union Hill Rd and 266th Ave NE Connection - 8"	Mains	0.00%	$ -				100.00%	100.00%
FF-17	NE 45th St/268th Ave NE Connection - 8"	Mains	0.00%	$ -			100.00%		100.00%
FF-18	NE 45th St/272nd Ave NE Replacement - 8"	Mains	6.25%	$ -			100.00%		100.00%
R-1	NE 25th St Connection 1 (NE 25th St Assemblage DEA) - 8"	Mains	0.00%	$ 211,000				100.00%	100.00%
R-2	NE 25th St Connection 2 - 8"	Mains	0.00%	$ 450,000				100.00%	100.00%
R-3	NE 24th St Connection (Cedar Hill DEA) - 8"	Mains	0.00%	$ 262,000				100.00%	100.00%
R-4	NE 26th St Connection - 8"	Mains	0.00%	$ -				100.00%	100.00%
R-5	207th Ave NE PRV Addition	Mains	0.00%	$ -	100.00%				100.00%
R-6	NE 15th St from 207th Pl NE to 208th NE Connection - 8"	Mains	0.00%	$ 139,000		75.00%	25.00%		100.00%
R-7	East Sammamish Park Connection - 12"	Mains	0.00%	$ 612,000	17.00%	83.00%			100.00%
R-8	NE 14th St from 212th to 216th NE Connection - 8"	Mains	0.00%	$ -				100.00%	100.00%
R-9	NE 8th St Replacement - 8"	Mains	56.25%	$ -		31.00%	69.00%		100.00%
R-10	212th Ave NE PRV Addition	Mains	0.00%	$ 217,000	100.00%				100.00%
R-11	236th Ct NE Connection - 8"	Mains	0.00%	$ -			100.00%		100.00%
R-12	NE 14th St Connection - 12"	Mains	0.00%	$ 274,000	17.00%	83.00%			100.00%
R-13	238th Ave NE Connection - 8"	Mains	0.00%	$ 228,000				100.00%	100.00%
R-14	240th Ave NE Replacement (NE 8th Assemblage DEA) - 8"	Mains	6.25%	$ 521,000				100.00%	100.00%
R-15	NE 4th St from 235th to 238th NE Connection - 8"	Mains	0.00%	$ -				100.00%	100.00%
R-16	243rd Ave NE Connection - 8"	Mains	0.00%	$ -			100.00%		100.00%
R-17	NE 18th St Connection 1 (NE 18th Assemblage DEA) - 8"	Mains	0.00%	$ 366,000				100.00%	100.00%
R-18	NE 18th St Connection 2 - 8"	Mains	0.00%	$ 228,000				100.00%	100.00%
R-19	247th Pl NE from NE 18th to 20th Connection - 8"	Mains	0.00%	$ 312,000				100.00%	100.00%
R-20	245th Ave NE Connection (Atherton-Campbell 246th NE Plat DEA) - 8"	Mains	0.00%	$ 838,000				100.00%	100.00%
R-21	NE 11th St to 250th Ave NE Connection - 8"	Mains	0.00%	$ -				100.00%	100.00%

Sammamish Plateau Water
2018 Water GFC Calculation
Capital Improvement Program

Capital Improvement Program (Current Dollars)

				2018 - 2027	Planned Funding Source				
Project ID	Description	Function	% R&R	10-Year Cost (Current Dollars)	GFC Fund	LFC Fund	Other District Resources	DEA/ULID	Total
R-22	250th Ave NE from NE 14th to NE 18th Connection - 8"	Mains	0.00%	$ -				100.00%	100.00%
R-23	254th Ave NE from NE 8th to NE 4th Connection - 8"	Mains	0.00%	$ -				100.00%	100.00%
R-24	222nd Pl NE Connection - 8"	Mains	0.00%	$ -				100.00%	100.00%
R-25	NE 2nd Ct Connection - 8"	Mains	0.00%	$ -			100.00%		100.00%
R-26	208th Ave SE PRV Addition	Mains	0.00%	$ -	100.00%				100.00%
R-27	220th Ave NE Connection - 8"	Mains	0.00%	$ 343,000				100.00%	100.00%
R-28	Town Center NW Connections - 12"	Mains	0.00%	$ 2,133,000				100.00%	100.00%
R-29	Town Center SW Connections - 12"	Mains	0.00%	$ 2,194,000				100.00%	100.00%
R-30	Town Center SE Connections - 12"	Mains	0.00%	$ 1,753,000				100.00%	100.00%
R-31	Future Town Center School Site Connection - 12"	Mains	0.00%	$ -				100.00%	100.00%
R-32	Thirty Acres Park Connection - 8"	Mains	0.00%	$ -				100.00%	100.00%
R-33	SE 19th St and 193rd Ave SE Connection (8") and PRV Addition	Mains	0.00%	$ -	41.00%			59.00%	100.00%
R-34	SE 12th St and 208th Ave SE Connection - 8"	Mains	0.00%	$ -				100.00%	100.00%
R-35	SE 19th St and 205th Ave SE Connection - 8"	Mains	0.00%	$ -				100.00%	100.00%
R-36	SE 20th St Connection - 8"	Mains	0.00%	$ -				100.00%	100.00%
R-37	SE 24th St to 210th Pl SE Connection (Tridco SE 24th Short Plat or Baker SE 24th Short Plat DEA) -	Mains	0.00%	$ 292,000				100.00%	100.00%
R-38	215th SE Connection - 8"	Mains	0.00%	$ 265,000				100.00%	100.00%
R-39	218th Ave SE Connection - 8"	Mains	0.00%	$ -				100.00%	100.00%
R-40	223rd Ave SE Connection (Lancaster 223rd DEA) - 8"	Mains	0.00%	$ 474,000				100.00%	100.00%
R-41	226th Ave SE Connection - 8"	Mains	0.00%	$ -				100.00%	100.00%
R-42	SE 22nd St Connection - 8"	Mains	0.00%	$ -				100.00%	100.00%
R-43	239th Pl SE Connection - 8"	Mains	0.00%	$ -				100.00%	100.00%
R-44	244th Ave SE Connection - 8"	Mains	0.00%	$ -				100.00%	100.00%
R-45	247th Ave to 248th Ave SE Connection - 8"	Mains	0.00%	$ -				100.00%	100.00%
R-46	SE 13th St Connection - 8"	Mains	0.00%	$ -				100.00%	100.00%
R-47	SE 17th St to SE 14th St Connection - 8"	Mains	0.00%	$ -				100.00%	100.00%
R-48	SE 17th St Connection (Yu SE 17th Short Plat DEA) - 8"	Mains	0.00%	$ 62,000				100.00%	100.00%
R-49	SE 20th Pl from 245th to 242nd Ave SE Connection - 8"	Mains	0.00%	$ -				100.00%	100.00%
R-50	246th Ave SE to SE 17th Pl Connection (Sammamish Highlands on 248th and Hamilton Estates D	Mains	0.00%	$ 151,000				100.00%	100.00%
R-51	251st Ave SE to West Beaver Lake Dr SE Connection - 8"	Mains	0.00%	$ -			100.00%		100.00%
R-52	SE 29th St to SE 24th Way Connection (8") and PRV Addition	Mains	0.00%	$ -	100.00%				100.00%
R-53	SE 29th St Connection - 8"	Mains	0.00%	$ -				100.00%	100.00%
R-54	SE 28th Pl Connection - 8"	Mains	0.00%	$ -			100.00%		100.00%
R-55	SE 39th St Connection - 8"	Mains	0.00%	$ -				100.00%	100.00%
R-56	SE 29th Pl Connectoin - 8"	Mains	0.00%	$ -				100.00%	100.00%
R-57	221st Ave SE Connection - 8"	Mains	0.00%	$ -				100.00%	100.00%
R-58	SE 35th St Connection - 8"	Mains	0.00%	$ -				100.00%	100.00%
R-59	239th Ave SE Connection - 8"	Mains	0.00%	$ -			100.00%		100.00%
R-60	241st Ave SE Connection - 8"	Mains	0.00%	$ -				100.00%	100.00%
R-61	SE 25th St and SE Duthie Hill Rd Connections - 8"	Mains	0.00%	$ -				100.00%	100.00%
R-62	SE Issaquah-Fall City Rd Connection - 8"	Mains	0.00%	$ -				100.00%	100.00%
R-63	SE 48th St to SE 46th Alignment Connection (Hochanadel SE 48th Property - Sorrento Estates DE	Mains	0.00%	$ 704,000				100.00%	100.00%
R-64	229th Pl SE Connection - 8"	Mains	0.00%	$ 134,620			100.00%		100.00%
R-65	240th Ave SE Connection - 8"	Mains	0.00%	$ -				100.00%	100.00%
R-66	East Lake Sammamish Center North Connection - 16"	Mains	0.00%	$ 230,000	100.00%				100.00%
R-67	229th Ave SE Connection - 8"	Mains	0.00%	$ -				100.00%	100.00%

Sammamish Plateau Water
2018 Water GFC Calculation
Capital Improvement Program

Capital Improvement Program (Current Dollars)

				2018 - 2027	Planned Funding Source				
Project ID	Description	Function	% R&R	10-Year Cost (Current Dollars)	GFC Fund	LFC Fund	Other District Resources	DEA/ULID	Total
R-68	East Lake Sammamish Center South Connection - 16"	Mains	0.00%	$ 489,000	100.00%				100.00%
R-69	University House/Timbers Connection - 8"	Mains	0.00%	$ -			100.00%		100.00%
R-70	Dawnbreaker Cascade Intertie/Connection - 8"	Mains	0.00%	$ -	100.00%				100.00%
R-71	250th and 252nd Ave NE from NE 80th to NE 85th St Connection - 8"	Mains	0.00%	$ -				100.00%	100.00%
R-72	248th Ave NE Connection - 8"	Mains	0.00%	$ -				100.00%	100.00%
R-73	254th Ave NE Connection - 8"	Mains	0.00%	$ -				100.00%	100.00%
R-74	245th Ave NE Connection - 8"	Mains	0.00%	$ -			100.00%		100.00%
R-75	NE 47th Pl and 254th Ave NE Connection - 8"	Mains	0.00%	$ -			100.00%		100.00%
R-76	NE 29th Pl Connection (8") and PRV Addition	Mains	0.00%	$ -	100.00%				100.00%
R-77	NE 24th St Amesbury Connection - 8"	Mains	0.00%	$ -				100.00%	100.00%
DE/CIP	Inglewood JNT 2387 NE 15th Residence DEA - 8"	Mains	0.00%	$ 88,000				100.00%	100.00%
DE/CIP	Inglewood Hill Rd at 211th PL NE Water Main Replacement - 8"	Mains	100.00%	$ 57,500		50.00%	50.00%		100.00%
DE/CIP	16th Sammamish II - Shillam DEA - 8"	Mains	0.00%	$ 108,000				100.00%	100.00%
DE/CIP	Twins Ridge DEA - 8"	Mains	0.00%	$ 698,000				100.00%	100.00%
DE/CIP	Morningside Estates DEA - 8"	Mains	0.00%	$ 358,000				100.00%	100.00%
DE/CIP	Flynn 218th SE Plat DEA (onsite portion) - 8"	Mains	0.00%	$ 150,000				100.00%	100.00%
DE/CIP	218th McCabe (aka Brixton) DEA - 12"	Mains	0.00%	$ 125,000	17.00%			83.00%	100.00%
DE/CIP	Hennessey 222nd SE Short Plat & 218th McCabe (aka Brixton) DEAs - 8"	Mains	0.00%	$ 496,000				100.00%	100.00%
DE/CIP	Village at Sammamish Town Center DEA - 12"	Mains	0.00%	$ 680,000				100.00%	100.00%
DE/CIP	Town Center Plateau 120 Apartments DEA - 12"	Mains	0.00%	$ 414,000				100.00%	100.00%
DE/CIP	Coffman 222nd NE Short Plat DEA - 8"	Mains	0.00%	$ 231,000				100.00%	100.00%
DE/CIP	Reynolds SE 8th Short Plat DEA - 8"	Mains	0.00%	$ 121,000				100.00%	100.00%
DE/CIP	Richter SE 14th Plat DEA - 8"	Mains	0.00%	$ 179,000				100.00%	100.00%
DE/CIP	Sammamish Highlands on 248th DEA - 8"	Mains	0.00%	$ 301,000				100.00%	100.00%
DE/CIP	Penny Lane South DEA - 8"	Mains	0.00%	$ 426,000				100.00%	100.00%
DE/CIP	223rd Mullen-Warren Assemblage DEA - 8"	Mains	0.00%	$ 919,000				100.00%	100.00%
DE/CIP	Providence Ridge DEA - 12"	Mains	0.00%	$ 1,028,000				100.00%	100.00%
DE/CIP	Taylor SE 20th Short Plat DEA - 8"	Mains	0.00%	$ 123,000				100.00%	100.00%
DE/CIP	Sienna Lane II DEA- 8"	Mains	0.00%	$ 105,000				100.00%	100.00%
DE/CIP	Sunnyhills Elementary School Replacement DEA - 12"	Mains	0.00%	$ 733,000				100.00%	100.00%
DE/CIP	Jarvis Estates SW DEA - 8"	Mains	0.00%	$ 458,000				100.00%	100.00%
DE/CIP	Oxley SE 30th Short Plat DEA - 8"	Mains	0.00%	$ 316,000				100.00%	100.00%
DE/CIP	Irons-Hedberg Issaquah-Beaver Lake Rd Plat DEA - 8"	Mains	0.00%	$ 398,000				100.00%	100.00%
DE/CIP	212th Way SE Road Improvements Water - 8"	Mains	0.00%	$ 170			100.00%		100.00%
DE/CIP	SE 52nd @ 229th SE AC Water Main Replacement - 8"	Mains	100.00%	$ 1,100	100.00%				100.00%
DE/CIP	221st PL SE Water Main Replacement - 12"	Mains	100.00%	$ 301,395	50.00%		50.00%		100.00%
DE/CIP	SE 62nd & 221st Pl SE Water Replacement - 12"	Mains	100.00%	$ 160,065	26.00%		74.00%		100.00%
DE/CIP	201 Development 9081 Redmond Ridge Short Plat DEA - 8"	Mains	0.00%	$ 1,064,000				100.00%	100.00%
DE/CIP	Culbertson 252nd NE Plat DEA - 8"	Mains	0.00%	$ 923,000				100.00%	100.00%
				$ -					0.00%
				$ -					0.00%
				$ -					0.00%
	Total			$ 56,509,000					

Sammamish Plateau Water
2018 Water GFC Calculation
Customer Data Forecast

ERU Forecast by Service Zone & Customer Class

ERU Forecast by Service Zone and Customer Class	Buildout	2017	2018	2019	2020	2021	2022	2023	2024	2025	2026	2027	2028	2029	2030	2031	2032	2033	2034	2035	2036	2037	2038
Single-Family Residential																							
City of Sammamish	20,869	15,534	15,825	15,901	15,940	16,075	16,187	16,284	16,384	16,485	16,485	16,485	16,485	16,485	16,485	16,485	16,485	16,485	16,513	16,571	16,628	16,743	*16,795*
City of Issaquah	1,203	417	508	507	507	507	699	715	748	776	781	785	790	794	799	810	821	832	844	854	881	906	*924*
King County	1,231	282	340	340	361	361	361	368	373	377	380	382	385	387	389	392	394	396	399	401	406	411	*414*
Cascade View	1,090	775	779	790	791	792	792	802	813	824	826	828	830	832	834	839	843	847	851	856	862	869	*874*
Subtotal	**24,392**	**17,007**	**17,451**	**17,536**	**17,597**	**17,734**	**18,038**	**18,169**	**18,318**	**18,462**	**18,471**	**18,480**	**18,489**	**18,498**	**18,507**	**18,526**	**18,542**	**18,561**	**18,607**	**18,682**	**18,777**	**18,928**	**19,007**
Multi-Family Residential																							
City of Sammamish	2,560	2,344	2,466	2,508	2,508	2,508	2,508	2,506	2,506	2,507	2,507	2,507	2,507	2,507	2,507	2,507	2,507	2,507	2,507	2,508	2,508	2,508	*2,508*
City of Issaquah	2,209	1,873	1,873	1,891	1,891	1,891	1,891	1,891	1,892	1,892	1,892	1,892	1,892	1,893	1,893	1,893	1,893	1,893	1,894	1,894	1,895	1,896	*1,897*
King County		3	3	3	3	3	3	0	0	0	0	0	0	0	0	0	0	0	0	0	0	0	0
Subtotal	**4,769**	**4,220**	**4,341**	**4,401**	**4,401**	**4,401**	**4,401**	**4,397**	**4,398**	**4,399**	**4,399**	**4,399**	**4,399**	**4,399**	**4,400**	**4,400**	**4,400**	**4,400**	**4,401**	**4,402**	**4,403**	**4,404**	**4,405**
Non-Residential																							
City of Sammamish	1,714	1,525	1,445	1,445	1,475	1,504	1,534	1,564	1,593	1,623	1,653	1,682	1,682	1,682	1,682	1,682	1,682	1,682	1,682	1,682	1,682	1,682	*1,682*
City of Issaquah	1,178	874	901	906	906	906	906	910	910	910	910	910	910	910	910	910	910	910	910	910	910	910	*910*
King County	143	88	88	88	88	88	88	88	88	88	88	88	88	88	88	88	88	88	88	88	88	88	*88*
Cascade View	14	14	14	14	14	14	14	14	14	14	14	14	14	14	14	14	14	14	14	14	14	14	*14*
Subtotal	**3,048**	**2,500**	**2,447**	**2,452**	**2,481**	**2,511**	**2,541**	**2,574**	**2,604**	**2,633**	**2,663**	**2,693**	**2,693**	**2,693**	**2,693**	**2,693**	**2,693**	**2,693**	**2,693**	**2,693**	**2,693**	**2,693**	**2,693**
Mixed Use																							
City of Sammamish	1,619		68	267	429	597	768	930	1,102	1,274	1,447	1,619	1,619	1,619	1,619	1,619	1,619	1,619	1,619	1,619	1,619	1,619	*1,619*
City of Issaquah	101							18	25	31	32	34	35	37	38	41	45	48	52	56	64	73	*81*
King County																							0
Subtotal	**1,720**	**0**	**68**	**267**	**429**	**597**	**768**	**947**	**1,126**	**1,305**	**1,479**	**1,653**	**1,654**	**1,656**	**1,657**	**1,661**	**1,664**	**1,668**	**1,671**	**1,675**	**1,683**	**1,692**	**1,700**
Subtotal - Plateau Zone	**32,826**	**22,938**	**23,514**	**23,852**	**24,104**	**24,437**	**24,943**	**25,272**	**25,620**	**25,962**	**26,173**	**26,384**	**26,392**	**26,401**	**26,409**	**26,427**	**26,443**	**26,461**	**26,508**	**26,582**	**26,680**	**26,835**	**26,917**
Subtotal - Cascade View Zone	**1,103**	**788**	**792**	**803**	**804**	**805**	**805**	**816**	**826**	**837**	**839**	**841**	**844**	**846**	**848**	**852**	**856**	**861**	**865**	**869**	**876**	**882**	**887**
Total System	**33,929**	**23,726**	**24,306**	**24,655**	**24,908**	**25,242**	**25,748**	**26,088**	**26,446**	**26,800**	**27,012**	**27,225**	**27,236**	**27,246**	**27,257**	**27,279**	**27,299**	**27,321**	**27,373**	**27,452**	**27,555**	**27,717**	**27,805**

ERU Forecast by Service Zone & Customer Class

ERU Forecast by Service Zone and Customer Class	2039	2040	2041	2042	2043	2044	2045	2046	2047	2048	2049	2050	2051	2052	2053	2054	2055	2056	2057	2058	2059	2060	2061
Single-Family Residential																							
City of Sammamish	16,847	16,900	16,952	17,005	17,058	17,111	17,164	17,218	17,271	17,325	17,379	17,433	17,487	17,542	17,596	17,651	17,706	17,761	17,816	17,872	17,928	17,983	18,039
City of Issaquah	943	961	981	1,000	1,020	1,040	1,061	1,082	1,104	1,126	1,149	1,171	1,195	1,203	1,203	1,203	1,203	1,203	1,203	1,203	1,203	1,203	1,203
King County	418	421	425	428	432	435	439	443	446	450	454	458	462	465	469	473	477	481	485	489	493	497	502
Cascade View	879	884	890	895	900	906	911	917	922	928	933	939	945	950	956	962	968	973	979	985	991	997	1,003
Subtotal	**19,087**	**19,167**	**19,247**	**19,328**	**19,410**	**19,493**	**19,576**	**19,660**	**19,744**	**19,829**	**19,915**	**20,001**	**20,088**	**20,161**	**20,225**	**20,289**	**20,354**	**20,419**	**20,484**	**20,549**	**20,615**	**20,681**	**20,747**
Multi-Family Residential																							
City of Sammamish	2,509	2,509	2,509	2,509	2,510	2,510	2,510	2,510	2,511	2,511	2,511	2,511	2,512	2,512	2,512	2,512	2,513	2,513	2,513	2,513	2,514	2,514	2,514
City of Issaquah	1,897	1,898	1,898	1,899	1,899	1,900	1,901	1,901	1,902	1,902	1,903	1,904	1,904	1,905	1,905	1,906	1,906	1,907	1,908	1,908	1,909	1,909	1,910
King County	0	0	0	0	0	0	0	0	0	0	0	0	0	0	0	0	0	0	0	0	0	0	0
Subtotal	**4,406**	**4,407**	**4,407**	**4,408**	**4,409**	**4,410**	**4,411**	**4,412**	**4,412**	**4,413**	**4,414**	**4,415**	**4,416**	**4,417**	**4,417**	**4,418**	**4,419**	**4,420**	**4,421**	**4,422**	**4,422**	**4,423**	**4,424**
Non-Residential																							
City of Sammamish	1,682	1,682	1,682	1,682	1,682	1,682	1,682	1,682	1,682	1,682	1,682	1,682	1,682	1,682	1,682	1,682	1,682	1,682	1,682	1,682	1,682	1,682	1,682
City of Issaquah	910	910	910	910	910	910	910	910	910	910	910	910	910	910	910	910	910	910	910	910	910	910	910
King County	88	88	88	88	88	88	88	88	88	88	88	88	88	88	88	88	88	88	88	88	88	88	88
Cascade View	14	14	14	14	14	14	14	14	14	14	14	14	14	14	14	14	14	14	14	14	14	14	14
Subtotal	**2,693**	**2,693**	**2,693**	**2,693**	**2,693**	**2,693**	**2,693**	**2,693**	**2,693**	**2,693**	**2,693**	**2,693**	**2,693**	**2,693**	**2,693**	**2,693**	**2,693**	**2,693**	**2,693**	**2,693**	**2,693**	**2,693**	**2,693**
Mixed Use																							
City of Sammamish	1,619	1,619	1,619	1,619	1,619	1,619	1,619	1,619	1,619	1,619	1,619	1,619	1,619	1,619	1,619	1,619	1,619	1,619	1,619	1,619	1,619	1,619	1,619
City of Issaquah	89	98	101	101	101	101	101	101	101	101	101	101	101	101	101	101	101	101	101	101	101	101	101
King County	0	0	0	0	0	0	0	0	0	0	0	0	0	0	0	0	0	0	0	0	0	0	0
Subtotal	**1,708**	**1,717**	**1,720**	**1,720**	**1,720**	**1,720**	**1,720**	**1,720**	**1,720**	**1,720**	**1,720**	**1,720**	**1,720**	**1,720**	**1,720**	**1,720**	**1,720**	**1,720**	**1,720**	**1,720**	**1,720**	**1,720**	**1,720**
Subtotal - Plateau Zone	**27,001**	**27,086**	**27,165**	**27,241**	**27,319**	**27,396**	**27,475**	**27,554**	**27,634**	**27,714**	**27,795**	**27,877**	**27,959**	**28,026**	**28,086**	**28,145**	**28,205**	**28,265**	**28,325**	**28,385**	**28,446**	**28,506**	**28,567**
Subtotal - Cascade View Zone	**893**	**898**	**903**	**909**	**914**	**919**	**925**	**930**	**936**	**941**	**947**	**953**	**958**	**964**	**970**	**975**	**981**	**987**	**993**	**999**	**1,005**	**1,011**	**1,017**
Total System	**27,893**	**27,983**	**28,068**	**28,150**	**28,232**	**28,316**	**28,400**	**28,484**	**28,570**	**28,655**	**28,742**	**28,829**	**28,917**	**28,990**	**29,055**	**29,120**	**29,186**	**29,252**	**29,318**	**29,384**	**29,450**	**29,517**	**29,584**

ERU Forecast by Service Zone & Customer Class

ERU Forecast by Service Zone and Customer Class	2062	2063	2064	2065	2066	2067	2068	2069	2070	2071	2072	2073	2074	2075	2076	2077	2078	2079	2080	2081	2082	2083	2084
Single-Family Residential																							
City of Sammamish	18,095	18,152	18,208	18,265	18,322	18,379	18,436	18,493	18,551	18,609	18,667	18,725	18,783	18,841	18,900	18,959	19,018	19,077	19,136	19,196	19,256	19,316	19,376
City of Issaquah	1,203	1,203	1,203	1,203	1,203	1,203	1,203	1,203	1,203	1,203	1,203	1,203	1,203	1,203	1,203	1,203	1,203	1,203	1,203	1,203	1,203	1,203	1,203
King County	506	510	514	519	523	527	532	536	541	545	550	554	559	563	568	573	578	583	587	592	597	602	607
Cascade View	1,009	1,015	1,021	1,028	1,034	1,040	1,046	1,052	1,059	1,065	1,072	1,078	1,085	1,090	1,090	1,090	1,090	1,090	1,090	1,090	1,090	1,090	1,090
Subtotal	**20,813**	**20,880**	**20,947**	**21,014**	**21,081**	**21,149**	**21,217**	**21,285**	**21,353**	**21,422**	**21,491**	**21,560**	**21,629**	**21,697**	**21,761**	**21,824**	**21,888**	**21,952**	**22,016**	**22,081**	**22,145**	**22,210**	**22,275**
Multi-Family Residential																							
City of Sammamish	2,514	2,515	2,515	2,515	2,515	2,516	2,516	2,516	2,516	2,517	2,517	2,517	2,518	2,518	2,518	2,518	2,519	2,519	2,519	2,519	2,520	2,520	2,520
City of Issaquah	1,910	1,911	1,912	1,912	1,913	1,913	1,914	1,915	1,915	1,916	1,916	1,917	1,917	1,918	1,919	1,919	1,920	1,920	1,921	1,922	1,922	1,923	1,923
King County	0	0	0	0	0	0	0	0	0	0	0	0	0	0	0	0	0	0	0	0	0	0	0
Subtotal	**4,425**	**4,426**	**4,427**	**4,427**	**4,428**	**4,429**	**4,430**	**4,431**	**4,432**	**4,432**	**4,433**	**4,434**	**4,435**	**4,436**	**4,437**	**4,437**	**4,438**	**4,439**	**4,440**	**4,441**	**4,442**	**4,443**	**4,443**
Non-Residential																							
City of Sammamish	1,682	1,682	1,682	1,682	1,682	1,682	1,682	1,682	1,682	1,682	1,682	1,682	1,682	1,682	1,682	1,682	1,682	1,682	1,682	1,682	1,682	1,682	1,682
City of Issaquah	910	910	910	910	910	910	910	910	910	910	910	910	910	910	910	910	910	910	910	910	910	910	910
King County	88	88	88	88	88	88	88	88	88	88	88	88	88	88	88	88	88	88	88	88	88	88	88
Cascade View	14	14	14	14	14	14	14	14	14	14	14	14	14	14	14	14	14	14	14	14	14	14	14
Subtotal	**2,693**	**2,693**	**2,693**	**2,693**	**2,693**	**2,693**	**2,693**	**2,693**	**2,693**	**2,693**	**2,693**	**2,693**	**2,693**	**2,693**	**2,693**	**2,693**	**2,693**	**2,693**	**2,693**	**2,693**	**2,693**	**2,693**	**2,693**
Mixed Use																							
City of Sammamish	1,619	1,619	1,619	1,619	1,619	1,619	1,619	1,619	1,619	1,619	1,619	1,619	1,619	1,619	1,619	1,619	1,619	1,619	1,619	1,619	1,619	1,619	1,619
City of Issaquah	101	101	101	101	101	101	101	101	101	101	101	101	101	101	101	101	101	101	101	101	101	101	101
King County	0	0	0	0	0	0	0	0	0	0	0	0	0	0	0	0	0	0	0	0	0	0	0
Subtotal	**1,720**	**1,720**	**1,720**	**1,720**	**1,720**	**1,720**	**1,720**	**1,720**	**1,720**	**1,720**	**1,720**	**1,720**	**1,720**	**1,720**	**1,720**	**1,720**	**1,720**	**1,720**	**1,720**	**1,720**	**1,720**	**1,720**	**1,720**
Subtotal - Plateau Zone	**28,629**	**28,690**	**28,752**	**28,813**	**28,875**	**28,938**	**29,000**	**29,063**	**29,126**	**29,189**	**29,252**	**29,315**	**29,379**	**29,443**	**29,507**	**29,572**	**29,636**	**29,701**	**29,766**	**29,832**	**29,897**	**29,963**	**30,029**
Subtotal - Cascade View Zone	**1,023**	**1,029**	**1,035**	**1,041**	**1,047**	**1,053**	**1,060**	**1,066**	**1,072**	**1,079**	**1,085**	**1,092**	**1,098**	**1,103**	**1,103**	**1,103**	**1,103**	**1,103**	**1,103**	**1,103**	**1,103**	**1,103**	**1,103**
Total System	**29,651**	**29,719**	**29,786**	**29,854**	**29,923**	**29,991**	**30,060**	**30,129**	**30,198**	**30,267**	**30,337**	**30,407**	**30,477**	**30,546**	**30,610**	**30,675**	**30,739**	**30,804**	**30,869**	**30,935**	**31,000**	**31,066**	**31,132**

ERU Forecast by Service Zone & Customer Class

ERU Forecast by Service Zone and Customer Class	2085	2086	2087	2088	2089	2090	2091	2092	2093	2094	2095	2096	2097	2098	2099	2100	2101	2102	2103	2104	2105	2106	2107
Single-Family Residential																							
City of Sammamish	19,436	19,497	19,557	19,618	19,679	19,740	19,802	19,863	19,925	19,987	20,049	20,112	20,174	20,237	20,300	20,363	20,427	20,490	20,554	20,618	20,682	20,747	20,811
City of Issaquah	1,203	1,203	1,203	1,203	1,203	1,203	1,203	1,203	1,203	1,203	1,203	1,203	1,203	1,203	1,203	1,203	1,203	1,203	1,203	1,203	1,203	1,203	1,203
King County	612	617	623	628	633	638	644	649	654	660	665	671	677	682	688	694	699	705	711	717	723	729	735
Cascade View	1,090	1,090	1,090	1,090	1,090	1,090	1,090	1,090	1,090	1,090	1,090	1,090	1,090	1,090	1,090	1,090	1,090	1,090	1,090	1,090	1,090	1,090	1,090
Subtotal	**22,341**	**22,406**	**22,472**	**22,538**	**22,605**	**22,671**	**22,738**	**22,805**	**22,872**	**22,940**	**23,007**	**23,075**	**23,144**	**23,212**	**23,281**	**23,350**	**23,419**	**23,488**	**23,558**	**23,628**	**23,698**	**23,768**	**23,839**
Multi-Family Residential																							
City of Sammamish	2,520	2,521	2,521	2,521	2,521	2,522	2,522	2,522	2,522	2,523	2,523	2,523	2,523	2,524	2,524	2,524	2,524	2,525	2,525	2,525	2,525	2,526	2,526
City of Issaquah	1,924	1,924	1,925	1,926	1,926	1,927	1,927	1,928	1,929	1,929	1,930	1,930	1,931	1,932	1,932	1,933	1,933	1,934	1,934	1,935	1,936	1,936	1,937
King County	0	0	0	0	0	0	0	0	0	0	0	0	0	0	0	0	0	0	0	0	0	0	0
Subtotal	**4,444**	**4,445**	**4,446**	**4,447**	**4,448**	**4,448**	**4,449**	**4,450**	**4,451**	**4,452**	**4,453**	**4,453**	**4,454**	**4,455**	**4,456**	**4,457**	**4,458**	**4,458**	**4,459**	**4,460**	**4,461**	**4,462**	**4,463**
Non-Residential																							
City of Sammamish	1,682	1,682	1,682	1,682	1,682	1,682	1,682	1,682	1,682	1,682	1,682	1,682	1,682	1,682	1,682	1,682	1,682	1,682	1,682	1,682	1,682	1,682	1,682
City of Issaquah	910	910	910	910	910	910	910	910	910	910	910	910	910	910	910	910	910	910	910	910	910	910	910
King County	88	88	88	88	88	88	88	88	88	88	88	88	88	88	88	88	88	88	88	88	88	88	88
Cascade View	14	14	14	14	14	14	14	14	14	14	14	14	14	14	14	14	14	14	14	14	14	14	14
Subtotal	**2,693**	**2,693**	**2,693**	**2,693**	**2,693**	**2,693**	**2,693**	**2,693**	**2,693**	**2,693**	**2,693**	**2,693**	**2,693**	**2,693**	**2,693**	**2,693**	**2,693**	**2,693**	**2,693**	**2,693**	**2,693**	**2,693**	**2,693**
Mixed Use																							
City of Sammamish	1,619	1,619	1,619	1,619	1,619	1,619	1,619	1,619	1,619	1,619	1,619	1,619	1,619	1,619	1,619	1,619	1,619	1,619	1,619	1,619	1,619	1,619	1,619
City of Issaquah	101	101	101	101	101	101	101	101	101	101	101	101	101	101	101	101	101	101	101	101	101	101	101
King County	0	0	0	0	0	0	0	0	0	0	0	0	0	0	0	0	0	0	0	0	0	0	0
Subtotal	**1,720**	**1,720**	**1,720**	**1,720**	**1,720**	**1,720**	**1,720**	**1,720**	**1,720**	**1,720**	**1,720**	**1,720**	**1,720**	**1,720**	**1,720**	**1,720**	**1,720**	**1,720**	**1,720**	**1,720**	**1,720**	**1,720**	**1,720**
Subtotal - Plateau Zone	**30,095**	**30,161**	**30,228**	**30,295**	**30,362**	**30,430**	**30,497**	**30,565**	**30,633**	**30,701**	**30,770**	**30,839**	**30,908**	**30,977**	**31,047**	**31,116**	**31,186**	**31,257**	**31,327**	**31,398**	**31,469**	**31,540**	**31,612**
Subtotal - Cascade View Zone	**1,103**	**1,103**	**1,103**	**1,103**	**1,103**	**1,103**	**1,103**	**1,103**	**1,103**	**1,103**	**1,103**	**1,103**	**1,103**	**1,103**	**1,103**	**1,103**	**1,103**	**1,103**	**1,103**	**1,103**	**1,103**	**1,103**	**1,103**
Total System	**31,198**	**31,264**	**31,331**	**31,398**	**31,465**	**31,533**	**31,600**	**31,668**	**31,736**	**31,804**	**31,873**	**31,942**	**32,011**	**32,080**	**32,150**	**32,219**	**32,289**	**32,360**	**32,430**	**32,501**	**32,572**	**32,643**	**32,715**

Sammamish Plateau Water
2018 Water GFC Calculatior
Customer Data Forecast

ERU Forecast by Service Zone & Customer Class

ERU Forecast by Service Zone and Customer Class	2108	2109	2110	2111	2112	2113	2114	2115	2116	2117	2118	2119	2120	2121	2122	2123	2124	2125	2126	2127	2128	2129	2130
Single-Family Residential																							
City of Sammamish	20,869	20,869	20,869	20,869	20,869	20,869	20,869	20,869	20,869	20,869	20,869	20,869	20,869	20,869	20,869	20,869	20,869	20,869	20,869	20,869	20,869	20,869	20,869
City of Issaquah	1,203	1,203	1,203	1,203	1,203	1,203	1,203	1,203	1,203	1,203	1,203	1,203	1,203	1,203	1,203	1,203	1,203	1,203	1,203	1,203	1,203	1,203	1,203
King County	741	748	754	760	766	773	779	786	792	799	806	812	819	826	833	840	847	854	861	868	876	883	890
Cascade View	1,090	1,090	1,090	1,090	1,090	1,090	1,090	1,090	1,090	1,090	1,090	1,090	1,090	1,090	1,090	1,090	1,090	1,090	1,090	1,090	1,090	1,090	1,090
Subtotal	**23,902**	**23,909**	**23,915**	**23,921**	**23,927**	**23,934**	**23,940**	**23,947**	**23,953**	**23,960**	**23,967**	**23,973**	**23,980**	**23,987**	**23,994**	**24,001**	**24,008**	**24,015**	**24,022**	**24,029**	**24,037**	**24,044**	**24,051**
Multi-Family Residential																							
City of Sammamish	2,526	2,526	2,527	2,527	2,527	2,527	2,528	2,528	2,528	2,528	2,529	2,529	2,529	2,529	2,530	2,530	2,530	2,530	2,531	2,531	2,531	2,531	2,532
City of Issaquah	1,937	1,938	1,939	1,939	1,940	1,940	1,941	1,942	1,942	1,943	1,943	1,944	1,944	1,945	1,946	1,946	1,947	1,947	1,948	1,949	1,949	1,950	1,950
King County	0	0	0	0	0	0	0	0	0	0	0	0	0	0	0	0	0	0	0	0	0	0	0
Subtotal	**4,464**	**4,464**	**4,465**	**4,466**	**4,467**	**4,468**	**4,469**	**4,469**	**4,470**	**4,471**	**4,472**	**4,473**	**4,474**	**4,474**	**4,475**	**4,476**	**4,477**	**4,478**	**4,479**	**4,480**	**4,480**	**4,481**	**4,482**
Non-Residential																							
City of Sammamish	1,682	1,682	1,682	1,682	1,682	1,682	1,682	1,682	1,682	1,682	1,682	1,682	1,682	1,682	1,682	1,682	1,682	1,682	1,682	1,682	1,682	1,682	1,682
City of Issaquah	910	910	910	910	910	910	910	910	910	910	910	910	910	910	910	910	910	910	910	910	910	910	910
King County	88	88	88	88	88	88	88	88	88	88	88	88	88	88	88	88	88	88	88	88	88	88	88
Cascade View	14	14	14	14	14	14	14	14	14	14	14	14	14	14	14	14	14	14	14	14	14	14	14
Subtotal	**2,693**	**2,693**	**2,693**	**2,693**	**2,693**	**2,693**	**2,693**	**2,693**	**2,693**	**2,693**	**2,693**	**2,693**	**2,693**	**2,693**	**2,693**	**2,693**	**2,693**	**2,693**	**2,693**	**2,693**	**2,693**	**2,693**	**2,693**
Mixed Use																							
City of Sammamish	1,619	1,619	1,619	1,619	1,619	1,619	1,619	1,619	1,619	1,619	1,619	1,619	1,619	1,619	1,619	1,619	1,619	1,619	1,619	1,619	1,619	1,619	1,619
City of Issaquah	101	101	101	101	101	101	101	101	101	101	101	101	101	101	101	101	101	101	101	101	101	101	101
King County	0	0	0	0	0	0	0	0	0	0	0	0	0	0	0	0	0	0	0	0	0	0	0
Subtotal	**1,720**	**1,720**	**1,720**	**1,720**	**1,720**	**1,720**	**1,720**	**1,720**	**1,720**	**1,720**	**1,720**	**1,720**	**1,720**	**1,720**	**1,720**	**1,720**	**1,720**	**1,720**	**1,720**	**1,720**	**1,720**	**1,720**	**1,720**
Subtotal - Plateau Zone	**31,676**	**31,683**	**31,690**	**31,697**	**31,704**	**31,712**	**31,719**	**31,726**	**31,734**	**31,741**	**31,749**	**31,756**	**31,764**	**31,772**	**31,779**	**31,787**	**31,795**	**31,803**	**31,811**	**31,819**	**31,827**	**31,835**	**31,843**
Subtotal - Cascade View Zone	**1,103**	**1,103**	**1,103**	**1,103**	**1,103**	**1,103**	**1,103**	**1,103**	**1,103**	**1,103**	**1,103**	**1,103**	**1,103**	**1,103**	**1,103**	**1,103**	**1,103**	**1,103**	**1,103**	**1,103**	**1,103**	**1,103**	**1,103**
Total System	**32,779**	**32,786**	**32,793**	**32,800**	**32,807**	**32,815**	**32,822**	**32,829**	**32,837**	**32,844**	**32,852**	**32,859**	**32,867**	**32,875**	**32,882**	**32,890**	**32,898**	**32,906**	**32,914**	**32,922**	**32,930**	**32,938**	**32,946**

ERU Forecast by Service Zone & Customer Class

ERU Forecast by Service Zone and Customer Class	2131	2132	2133	2134	2135	2136	2137	2138	2139	2140	2141	2142	2143	2144	2145	2146	2147	2148	2149	2150
Single-Family Residential																				
City of Sammamish	20,869	20,869	20,869	20,869	20,869	20,869	20,869	20,869	20,869	20,869	20,869	20,869	20,869	20,869	20,869	20,869	20,869	20,869	20,869	20,869
City of Issaquah	1,203	1,203	1,203	1,203	1,203	1,203	1,203	1,203	1,203	1,203	1,203	1,203	1,203	1,203	1,203	1,203	1,203	1,203	1,203	1,203
King County	898	905	913	920	928	936	944	951	959	967	975	984	992	1,000	1,008	1,017	1,025	1,034	1,043	1,051
Cascade View	1,090	1,090	1,090	1,090	1,090	1,090	1,090	1,090	1,090	1,090	1,090	1,090	1,090	1,090	1,090	1,090	1,090	1,090	1,090	1,090
Subtotal	**24,059**	**24,066**	**24,074**	**24,081**	**24,089**	**24,097**	**24,105**	**24,112**	**24,120**	**24,128**	**24,136**	**24,145**	**24,153**	**24,161**	**24,169**	**24,178**	**24,186**	**24,195**	**24,204**	**24,212**
Multi-Family Residential																				
City of Sammamish	2,532	2,532	2,532	2,533	2,533	2,533	2,533	2,534	2,534	2,534	2,535	2,535	2,535	2,535	2,536	2,536	2,536	2,536	2,537	2,537
City of Issaquah	1,951	1,952	1,952	1,953	1,953	1,954	1,955	1,955	1,956	1,956	1,957	1,958	1,958	1,959	1,959	1,960	1,961	1,961	1,962	1,962
King County	0	0	0	0	0	0	0	0	0	0	0	0	0	0	0	0	0	0	0	0
Subtotal	**4,483**	**4,484**	**4,485**	**4,485**	**4,486**	**4,487**	**4,488**	**4,489**	**4,490**	**4,491**	**4,491**	**4,492**	**4,493**	**4,494**	**4,495**	**4,496**	**4,497**	**4,497**	**4,498**	**4,499**
Non-Residential																				
City of Sammamish	1,682	1,682	1,682	1,682	1,682	1,682	1,682	1,682	1,682	1,682	1,682	1,682	1,682	1,682	1,682	1,682	1,682	1,682	1,682	1,682
City of Issaquah	910	910	910	910	910	910	910	910	910	910	910	910	910	910	910	910	910	910	910	910
King County	88	88	88	88	88	88	88	88	88	88	88	88	88	88	88	88	88	88	88	88
Cascade View	14	14	14	14	14	14	14	14	14	14	14	14	14	14	14	14	14	14	14	14
Subtotal	**2,693**	**2,693**	**2,693**	**2,693**	**2,693**	**2,693**	**2,693**	**2,693**	**2,693**	**2,693**	**2,693**	**2,693**	**2,693**	**2,693**	**2,693**	**2,693**	**2,693**	**2,693**	**2,693**	**2,693**
Mixed Use																				
City of Sammamish	1,619	1,619	1,619	1,619	1,619	1,619	1,619	1,619	1,619	1,619	1,619	1,619	1,619	1,619	1,619	1,619	1,619	1,619	1,619	1,619
City of Issaquah	101	101	101	101	101	101	101	101	101	101	101	101	101	101	101	101	101	101	101	101
King County	0	0	0	0	0	0	0	0	0	0	0	0	0	0	0	0	0	0	0	0
Subtotal	**1,720**	**1,720**	**1,720**	**1,720**	**1,720**	**1,720**	**1,720**	**1,720**	**1,720**	**1,720**	**1,720**	**1,720**	**1,720**	**1,720**	**1,720**	**1,720**	**1,720**	**1,720**	**1,720**	**1,720**
Subtotal - Plateau Zone	**31,852**	**31,860**	**31,868**	**31,877**	**31,885**	**31,894**	**31,903**	**31,911**	**31,920**	**31,929**	**31,938**	**31,947**	**31,956**	**31,965**	**31,974**	**31,984**	**31,993**	**32,002**	**32,012**	**32,021**
Subtotal - Cascade View Zone	**1,103**	**1,103**	**1,103**	**1,103**	**1,103**	**1,103**	**1,103**	**1,103**	**1,103**	**1,103**	**1,103**	**1,103**	**1,103**	**1,103**	**1,103**	**1,103**	**1,103**	**1,103**	**1,103**	**1,103**
Total System	**32,955**	**32,963**	**32,971**	**32,980**	**32,988**	**32,997**	**33,006**	**33,014**	**33,023**	**33,032**	**33,041**	**33,050**	**33,059**	**33,068**	**33,077**	**33,087**	**33,096**	**33,105**	**33,115**	**33,124**

Sammamish Plateau Water
2018 Water GFC Calculation
Interest Rates

Year	Bond Buyer Index												
	Jan	Feb	Mar	Apr	May	Jun	Jul	Aug	Sep	Oct	Nov	Dec	Annual Average
1953	2.44%	2.59%	2.65%	2.67%	2.82%	3.03%	2.95%	2.90%	2.87%	2.71%	2.60%	2.59%	2.74%
1954	2.50%	2.42%	2.39%	2.47%	2.49%	2.47%	2.32%	2.26%	2.31%	2.34%	2.32%	2.36%	2.39%
1955	2.40%	2.43%	2.44%	2.41%	2.38%	2.41%	2.54%	2.60%	2.58%	2.51%	2.45%	2.57%	2.48%
1956	2.50%	2.44%	2.57%	2.70%	2.68%	2.54%	2.65%	2.80%	2.93%	2.95%	3.16%	3.22%	2.76%
1957	3.18%	3.00%	3.09%	3.13%	3.27%	3.41%	3.39%	3.54%	3.53%	3.42%	3.37%	3.04%	3.28%
1958	2.91%	3.02%	3.06%	2.96%	2.92%	2.97%	3.09%	3.35%	3.54%	3.45%	3.32%	3.33%	3.16%
1959	3.42%	3.36%	3.30%	3.39%	3.57%	3.71%	3.71%	3.58%	3.78%	3.62%	3.55%	3.70%	3.56%
1960	3.72%	3.60%	3.57%	3.56%	3.60%	3.55%	3.50%	3.33%	3.42%	3.53%	3.40%	3.40%	3.52%
1961	3.39%	3.31%	3.45%	3.48%	3.43%	3.52%	3.51%	3.52%	3.53%	3.42%	3.41%	3.47%	3.45%
1962	3.34%	3.21%	3.14%	3.06%	3.11%	3.25%	3.27%	3.23%	3.11%	3.02%	3.04%	3.07%	3.15%
1963	3.10%	3.15%	3.05%	3.10%	3.11%	3.21%	3.22%	3.13%	3.20%	3.20%	3.30%	3.27%	3.17%
1964	3.22%	3.14%	3.28%	3.28%	3.20%	3.20%	3.18%	3.19%	3.23%	3.25%	3.18%	3.13%	3.21%
1965	3.06%	3.09%	3.17%	3.15%	3.17%	3.24%	3.27%	3.24%	3.35%	3.40%	3.45%	3.54%	3.26%
1966	3.52%	3.64%	3.72%	3.56%	3.65%	3.77%	3.95%	4.12%	4.12%	3.93%	3.86%	3.86%	3.81%
1967	3.54%	3.52%	3.55%	3.60%	3.89%	3.96%	4.02%	3.99%	4.12%	4.29%	4.34%	4.43%	3.94%
1968	4.29%	4.31%	4.54%	4.34%	4.54%	4.49%	4.33%	4.21%	4.38%	4.49%	4.60%	4.82%	4.45%
1969	4.85%	4.98%	5.26%	5.19%	5.33%	5.75%	5.75%	6.00%	6.26%	6.09%	6.30%	6.82%	5.72%
1970	6.63%	6.22%	6.05%	6.65%	7.00%	6.93%	6.42%	6.17%	6.31%	6.37%	5.71%	5.47%	6.33%
1971	5.35%	5.23%	5.17%	5.37%	5.90%	5.95%	6.06%	5.82%	5.37%	5.06%	5.20%	5.21%	5.47%
1972	5.12%	5.28%	5.31%	5.43%	5.30%	5.33%	5.41%	5.30%	5.36%	5.18%	5.02%	5.05%	5.26%
1973	5.05%	5.13%	5.29%	5.15%	5.15%	5.17%	5.40%	5.48%	5.10%	5.05%	5.18%	5.12%	5.19%
1974	5.22%	5.20%	5.40%	5.73%	6.02%	6.13%	6.68%	6.71%	6.76%	6.57%	6.61%	7.05%	6.17%
1975	6.82%	6.39%	6.73%	6.95%	6.97%	6.94%	7.07%	7.17%	7.44%	7.39%	7.43%	7.31%	7.05%
1976	7.07%	6.94%	6.91%	6.60%	6.87%	6.87%	6.79%	6.61%	6.51%	6.30%	6.29%	5.94%	6.64%
1977	5.87%	5.88%	5.89%	5.72%	5.75%	5.62%	5.63%	5.62%	5.51%	5.64%	5.49%	5.57%	5.68%
1978	5.71%	5.62%	5.61%	5.79%	6.03%	6.22%	6.28%	6.12%	6.09%	6.13%	6.19%	6.50%	6.02%
1979	6.46%	6.31%	6.33%	6.28%	6.25%	6.12%	6.13%	6.20%	6.52%	7.08%	7.30%	7.22%	6.52%
1980	7.35%	8.16%	9.16%	8.63%	7.59%	7.63%	8.13%	8.67%	8.94%	9.11%	9.56%	10.20%	8.59%
1981	9.66%	10.09%	10.16%	10.62%	10.77%	10.67%	11.14%	12.26%	12.92%	12.83%	11.89%	12.91%	11.33%
1982	13.28%	12.97%	12.82%	12.58%	11.95%	12.44%	12.28%	11.23%	10.66%	9.68%	10.06%	9.96%	11.66%
1983	9.50%	9.58%	9.20%	9.04%	9.11%	9.52%	9.53%	9.72%	9.58%	9.66%	9.74%	9.89%	9.51%
1984	9.63%	9.64%	9.94%	9.96%	10.49%	10.67%	10.42%	9.99%	10.10%	10.25%	10.17%	9.95%	10.10%
1985	9.51%	9.65%	9.77%	9.42%	9.01%	8.69%	8.81%	9.08%	9.27%	9.08%	8.54%	8.42%	9.10%
1986	8.08%	7.44%	7.08%	7.19%	7.54%	7.87%	7.51%	7.21%	7.11%	7.08%	6.84%	6.87%	7.32%
1987	6.66%	6.61%	6.65%	7.55%	8.00%	7.79%	7.72%	7.82%	8.26%	8.70%	7.95%	7.96%	7.64%
1988	7.69%	7.49%	7.74%	7.81%	7.91%	7.78%	7.76%	7.79%	7.66%	7.46%	7.46%	7.61%	7.68%
1989	7.35%	7.44%	7.59%	7.49%	7.25%	7.02%	6.96%	7.06%	7.26%	7.22%	7.14%	6.98%	7.23%
1990	7.10%	7.22%	7.29%	7.39%	7.35%	7.24%	7.19%	7.32%	7.43%	7.49%	7.18%	7.09%	7.27%
1991	7.08%	6.91%	7.10%	7.02%	6.95%	7.13%	7.05%	6.90%	6.80%	6.68%	6.73%	6.69%	6.92%
1992	6.54%	6.74%	6.76%	6.67%	6.57%	6.49%	6.13%	6.16%	6.25%	6.41%	6.36%	6.22%	6.44%
1993	6.16%	5.87%	5.64%	5.76%	5.73%	5.63%	5.57%	5.45%	5.29%	5.25%	5.47%	5.35%	5.60%
1994	5.31%	5.40%	5.91%	6.23%	6.19%	6.11%	6.23%	6.21%	6.28%	6.52%	6.97%	6.80%	6.18%
1995	6.53%	6.22%	6.10%	6.02%	5.95%	5.84%	5.92%	6.06%	5.91%	5.80%	5.64%	5.45%	5.95%
1996	5.43%	5.43%	5.79%	5.94%	5.98%	6.02%	5.92%	5.76%	5.87%	5.72%	5.59%	5.64%	5.76%
1997	5.72%	5.63%	5.76%	5.88%	5.70%	5.53%	5.35%	5.41%	5.39%	5.38%	5.33%	5.19%	5.52%
1998	5.06%	5.10%	5.21%	5.23%	5.20%	5.12%	5.14%	5.10%	4.99%	4.93%	5.03%	4.98%	5.09%
1999	5.01%	5.03%	5.10%	5.08%	5.18%	5.37%	5.36%	5.58%	5.69%	5.92%	5.86%	5.95%	5.43%
2000	6.08%	6.00%	5.83%	5.75%	6.00%	5.80%	5.63%	5.51%	5.56%	5.59%	5.54%	5.22%	5.71%
2001	5.10%	5.18%	5.13%	5.27%	5.29%	5.20%	5.20%	5.03%	5.09%	5.05%	5.04%	5.25%	5.15%
2002	5.16%	5.11%	5.29%	5.22%	5.19%	5.09%	5.02%	4.95%	4.74%	4.88%	4.95%	4.85%	5.04%
2003	4.90%	4.81%	4.76%	4.74%	4.41%	4.33%	4.74%	5.10%	4.92%	4.89%	4.73%	4.65%	4.75%
2004	4.61%	4.55%	4.41%	4.82%	5.07%	5.05%	4.87%	4.70%	4.56%	4.49%	4.52%	4.48%	4.68%
2005	4.41%	4.35%	4.57%	4.46%	4.31%	4.23%	4.31%	4.32%	4.29%	4.49%	4.57%	4.46%	4.40%
2006	4.37%	4.41%	4.44%	4.58%	4.59%	4.60%	4.61%	4.39%	4.27%	4.30%	4.14%	4.11%	4.40%
2007	4.23%	4.22%	4.15%	4.26%	4.31%	4.60%	4.56%	4.64%	4.51%	4.39%	4.46%	4.42%	4.40%
2008	4.27%	4.64%	4.93%	4.70%	4.58%	4.69%	4.68%	4.69%	4.86%	5.50%	5.23%	5.56%	4.86%
2009	5.07%	4.90%	4.99%	4.78%	4.56%	4.81%	4.72%	4.60%	4.24%	4.20%	4.37%	4.21%	4.62%
2010	4.33%	4.36%	4.36%	4.41%	4.29%	4.36%	4.32%	4.03%	3.87%	3.87%	4.40%	4.92%	4.29%
2011	5.28%	5.15%	4.92%	4.99%	4.59%	4.51%	4.52%	4.02%	4.01%	4.13%	4.05%	3.95%	4.51%
2012	3.68%	3.66%	3.91%	3.95%	3.77%	3.94%	3.78%	3.74%	3.73%	3.65%	3.46%	3.48%	3.73%
2013	3.60%	3.72%	3.96%	3.92%	3.72%	4.27%	4.56%	4.82%	4.79%	4.56%	4.60%	4.73%	4.27%
2014	4.59%	4.44%	4.46%	4.35%	4.29%	4.35%	4.33%	4.23%	4.13%	3.96%	3.96%	3.70%	4.23%
2015	3.40%	3.58%	3.59%	3.51%	3.76%	3.82%	3.79%	3.74%	3.78%	3.67%	3.68%	3.57%	3.66%
2016	3.41%	3.30%	3.38%	3.30%	3.29%	3.01%	2.83%	2.85%	2.93%	3.27%	3.53%	3.88%	3.25%
2017	3.80%	3.90%	3.95%	3.78%	3.76%	3.56%	3.56%	3.53%	3.57%	3.61%	3.56%	3.43%	3.67%
2018													
2019													
2020													
2021													
2022													
2023													

ENR Construction Cost Index (20-City Average)													
Jan	Feb	Mar	Apr	May	Jun	Jul	Aug	Sep	Oct	Nov	Dec	Annual Average	
												600	
												628	
												660	
												692	
												724	
												759	
												797	
												824	
												847	
												872	
												901	
												936	
												971	
												1019	
												1074	
												1155	
												1269	
												1381	
												1581	
												1753	
												1895	
												2020	
												2212	
												2401	
												2576	
												2776	
												3003	
												3237	
												3535	
												3825	
												4066	
												4148	
												4182	
												4295	
												4406	
												4519	
												4615	
4680	4685	4691	4693	4707	4732	4734	4752	4774	4771	4787	4777	4732	
4777	4773	4772	4766	4801	4818	4854	4892	4891	4892	4896	4889	4835	
4888	4884	4927	4946	4965	4973	4992	5032	5042	5052	5058	5059	4985	
5071	5070	5106	5167	5262	5260	5252	5230	5255	5264	5278	5310	5210	
5336	5371	5381	5405	5405	5408	5409	5424	5437	5437	5439	5439	5408	
5443	5444	5435	5432	5433	5432	5484	5506	5491	5511	5519	5524	5471	
5523	5532	5537	5550	5572	5597	5617	5652	5683	5719	5740	5744	5622	
5765	5769	5759	5799	5837	5860	5863	5854	5851	5848	5838	5858	5825	
5852	5874	5875	5883	5881	5895	5921	5929	5963	5986	5995	5991	5920	
6000	5992	5986	6008	6006	6039	6076	6091	6128	6134	6127	6127	6060	
6130	6160	6202	6201	6233	6238	6225	6233	6224	6259	6266	6283	6221	
6281	6272	6279	6286	6288	6318	6404	6389	6391	6397	6410	6390	6342	
6462	6462	6502	6480	6512	6532	6605	6592	6589	6579	6578	6563	6538	
6581	6640	6627	6635	6642	6694	6696	6733	6741	6771	6794	6782	6695	
6825	6861	6957	7017	7064	7109	7126	7188	7298	7314	7312	7308	7115	
7297	7298	7309	7355	7398	7415	7422	7479	7540	7563	7630	7647	7446	
7660	7689	7692	7695	7691	7700	7721	7723	7763	7883	7911	7888	7751	
7880	7880	7856	7865	7942	7939	7959	8007	8050	8045	8092	8089	7967	
8090	8094	8109	8112	8141	8185	8293	8362	8557	8623	8602	8551	8310	
8549	8533	8534	8528	8574	8578	8566	8564	8586	8596	8592	8641	8570	
8660	8672	8671	8677	8761	8805	8865	8858	8836	8921	8951	8952	8802	
8938	8998	9011	9027	9035	9053	9080	9088	9116	9147	9173	9172	9070	
9172	9198	9268	9273	9290	9291	9324	9351	9341	9376	9398	9412	9308	
9437	9453	9456	9484	9516	9542	9552	9545	9552	9689	9666	9668	9547	
9664	9681	9702	9750	9796	9800	9835	9846	9870	9886	9912	9936	9807	
9972	9962	9972	9992	9975	10036	10037	10039	10065	10128	10092	10135	10034	
10133	10182	10242	10280	10315	10337	10379	10386	10403	10435	10443	10531	10339	
10542	10559	10667	10678	10692	10703	10789	10826	10823	10817	10870	10873	10737	Inflation
10878	10889	10959	10972	11013								11059	3.00%
												11391	3.00%
												11732	3.00%
												12084	3.00%
												12447	3.00%
												12820	3.00%

This page intentionally left blank.

Appendix U

SEPA Checklist

This page intentionally left blank.

WAC 197-11-990 Notice of Action

NOTICE OF ACTION

NOTICE IS GIVEN UNDER SEPA, RCW 43.21C.080, THAT (NAME OF AGENCY OR ENTITY) *Sammamish Plateau Water & Sewer District* TOOK THE ACTION DESCRIBED IN (2) BELOW ON (DATE) *April 1, 2019*

1. ANY ACTION TO SET ASIDE, ENJOIN, REVIEW, OR OTHERWISE CHALLENGE SUCH ACTION ON THE GROUNDS OF NON-COMPLIANCE WITH THE PROVISIONS OF CHAPTER 43.21C RCW (STATE ENVIRONMENTAL POLICY ACT) SHALL BE COMMENCED ON OR BEFORE (DATE) *May 13, 2019.*

2. DESCRIPTION OF AGENCY ACTION: *Determination of Non-Significance with respect to the 2018 Water Comprehensive Plan.*

3. DESCRIPTION OF PROPOSAL (IF NOT COVERED BY (2)):
The 2018 Water Comprehensive Plan is a non-project action providing a compilation of planning data, water use projections, water system layout and planning for including strategies associated with funding and provision of water supply to the service area.

4. LOCATION OF PROPOSAL (A SUFFICIENT DESCRIPTION SHOULD BE GIVEN TO LOCATE THE SITE, IF ANY, BUT A COMPLETE LEGAL DESCRIPTION IS NOT REQUIRED):
The District's service area, which is on the Sammamish Plateau and the eastern portion of Union Hill. The District is bounded by Lake Sammamish on the west and the Snoqualmie Valley on the east, and approximately NE 100th Street to the north, and I-90 to the south. The project area is located within Sections 1-17, 21-23, 27, and 28 of Township 24N, Range 6E; Sections 5-8 and 18 of Township 24N, Range 7E; Sections 1, 2, 11-14, 22-29, and 31-36 of Township 25N, Range 6E; and Section 30 and 31 of Township 25N, Range 7E.

5. TYPE OF ENVIRONMENTAL REVIEW UNDER SEPA (INCLUDE NAME AND DATE OF ANY ENVIRONMENTAL DOCUMENTS):
Non-Project Action, SEPA Checklist dated January 27, 2019 and DNS dated February 19, 2019

6. DOCUMENTS MAY BE EXAMINED DURING REGULAR BUSINESS HOURS AT LOCATION, INCLUDING ROOM NUMBER, IF ANY):
Sammamish Plateau Water and Sewer District, 1510 - 228th Ave SE, Sammamish WA 98075.

7. NAME OF AGENCY, PROPONENT, OR APPLICANT GIVING NOTICE:
Sammamish Plateau Water and Sewer District Administration Department.

8. THIS NOTICE IS FILED BY (SIGNATURE OF INDIVIDUAL AND CAPACITY IN WHICH THE PERSON IS SIGNING):

John C. Krauss, General Manager, Sammamish Plateau Water & Sewer District

DATE 4/1/19

WAC 197-11-970 **Determination of nonsignificance (DNS).**

DETERMINATION OF NONSIGNIFICANCE

Description of proposal: 2018 Water Comprehensive Plan

Proponent Sammamish Plateau Water and Sewer District Administration Department.

Location of proposal, including street address, if any: The District's service area, which is on the Sammamish Plateau and the eastern portion of Union Hill. The District is bounded by Lake Sammamish on the west and the Snoqualmie Valley on the east, and approximately NE 100th Street to the north, and I-90 to the south. The project area is located within Sections 1-17, 21-23, 27, and 28 of Township 24N, Range 6E; Sections 5-8 and 18 of Township 24N, Range 7E; Sections 1, 2, 11-14, 22-29, and 31-36 of Township 25N, Range 6E; and Section 30 and 31 of Township 25N, Range 7E.

Lead Agency: Sammamish Plateau Water and Sewer District

The lead agency for this proposal has determined that it does not have a probable significant adverse impact on the environment. An environmental impact statement (EIS) is not required under RCW 43.21C.030(2)(c). This decision was made after review of a completed environmental checklist and other information on file with the lead agency. This information is available to the public on request.

☐ There is no comment period for this DNS

☒ This DNS is issued under 197-11-340(2); the lead agency will not act on this proposal for 15 days from the date below. Comments must be submitted by March 11, 2019

Responsible official: John C. Krauss
Position/title: General Manager
Sammamish Plateau Water and Sewer District Phone (425) 392-6256
Address: 1510 - 228th Avenue SE, Sammamish, Washington 98075

Date: 2/19/19 Signature [signature]

(OPTIONAL)

☐ You may appeal this determination to (name) _____
at (location) _____
no later than (date) _____
by (method) _____

You should be prepared to make specific factual objections.
Contact _____ to read or ask about the procedures for SEPA appeals.

☒ There is no agency appeal.

This page intentionally left blank.

SEPA ENVIRONMENTAL CHECKLIST

Purpose of checklist:

Governmental agencies use this checklist to help determine whether the environmental impacts of your proposal are significant. This information is also helpful to determine if available avoidance, minimization or compensatory mitigation measures will address the probable significant impacts or if an environmental impact statement will be prepared to further analyze the proposal.

***Instructions for applicants*:**

This environmental checklist asks you to describe some basic information about your proposal. Please answer each question accurately and carefully, to the best of your knowledge. You may need to consult with an agency specialist or private consultant for some questions. You may use "not applicable" or "does not apply" only when you can explain why it does not apply and not when the answer is unknown. You may also attach or incorporate by reference additional studies reports. Complete and accurate answers to these questions often avoid delays with the SEPA process as well as later in the decision-making process.

The checklist questions apply to all parts of your proposal, even if you plan to do them over a period of time or on different parcels of land. Attach any additional information that will help describe your proposal or its environmental effects. The agency to which you submit this checklist may ask you to explain your answers or provide additional information reasonably related to determining if there may be significant adverse impact.

Instructions for Lead Agencies:
Please adjust the format of this template as needed. Additional information may be necessary to evaluate the existing environment, all interrelated aspects of the proposal and an analysis of adverse impacts. The checklist is considered the first but not necessarily the only source of information needed to make an adequate threshold determination. Once a threshold determination is made, the lead agency is responsible for the completeness and accuracy of the checklist and other supporting documents.

Use of checklist for nonproject proposals: [help]

For nonproject proposals (such as ordinances, regulations, plans and programs), complete the applicable parts of sections A and B plus the SUPPLEMENTAL SHEET FOR NONPROJECT ACTIONS (part D). Please completely answer all questions that apply and note that the words "project," "applicant," and "property or site" should be read as "proposal," "proponent," and "affected geographic area," respectively. The lead agency may exclude (for non-projects) questions in Part B - Environmental Elements –that do not contribute meaningfully to the analysis of the proposal.

A. Background [help]

1. Name of proposed project, if applicable: [help]
   Sammamish Plateau Water and Sewer District 2018 Water Comprehensive Plan

2. Name of applicant: [help]
   Sammamish Plateau Water and Sewer District
   Administration Department

3. Address and phone number of applicant and contact person: [help]

Jay Regenstrief, P.E., Planning Engineer
Sammamish Plateau Water and Sewer District
1510 228th Avenue SE
Sammamish, WA 98075
425-392-6256

4. Date checklist prepared: [help]

December 2018

5. Agency requesting checklist: [help]

Washington State Department of Health (DOH)

6. Proposed timing or schedule (including phasing, if applicable): [help]

The project covers a 20 year planning to meet the District's present and future water supply and infrastructure needs.

7. Do you have any plans for future additions, expansion, or further activity related to or connected with this proposal? If yes, explain. [help]

No. The plan will be implemented over the course of the next 20 years, with the first update to identify any needed amendments in ten years. Any amendments to this plan will be reviewed under separate SEPA processes.

Specific actions described in the plan will be reviewed under separate project and site specific SEPA processes as the actions are proposed for specific design and implementation. This SEPA review for the Water Comprehensive Plan is a "non-project action."

8. List any environmental information you know about that has been prepared, or will be prepared, directly related to this proposal. [help]

Environmental work has been associated with the following plans, which are considered in development of the Water Comprehensive Plan.

King County Comprehensive Plan (2016)
East King County Coordinated Water System Plan (1989) and Update (1996)
East King County Groundwater Management Plan (1998)
Redmond-Bear Creek Valley Groundwater Management Plan (1999)
Issaquah Creek Valley Groundwater Management Plan (1999)
Lower Issaquah Valley Wellhead Protection Plan (1993-1995)
Wellhead Protection Program for Plateau and Cascade View Wells (1998)
City of Issaquah Water System Plan Update (2013)
Union Hill Water Association Water Comprehensive Plan (2015)
Northeast Sammamish Sewer & Water District Water Comprehensive Plan (2010)
City of Issaquah Comprehensive Plan (2017)
City of Sammamish Comprehensive Plan (2015)
Cascade Water Alliance Transmission and Supply Plan (2012)
Ames Lake Water Association Water Comprehensive Plan (2008, Amended 2010)
Fall City Water District Water Comprehensive Plan (2016)

Hydrogeologic Assessment and Update to Lower Issaquah Valley Aquifer Production Wells 7, 8 and 9 Wellhead Protection Areas (2017)
Sammamish Plateau Water: Monitoring and Response Plan for Perflourinated Compounds (2017)

9. Do you know whether applications are pending for governmental approvals of other proposals directly affecting the property covered by your proposal? If yes, explain. [help]

No.

10. List any government approvals or permits that will be needed for your proposal, if known. [help]

The Water Comprehensive Plan must be adopted by the District Board of Commissioners, approved by the City of Issaquah and City of Sammamish for consistency with their comprehensive plans, land use plans and development regulations, and approved by King County and the Washington State Department of Health.

11. Give brief, complete description of your proposal, including the proposed uses and the size of the project and site. There are several questions later in this checklist that ask you to describe certain aspects of your proposal. You do not need to repeat those answers on this page. (Lead agencies may modify this form to include additional specific information on project description.) [help]

The Sammamish Plateau Water and Sewer District (District), governed by a five-person Board of Commissioners, has been supplying drinking water to its customers on the Sammamish Plateau for more than 70 years. The District's water service area is composed of two distinct areas, designated the Plateau Zone and the Cascade View Zone. The system includes a total of 12 wells, two connections to Cascade's regional supply, eight storage tanks, and more than 296 miles of transmission and distribution pipelines, and currently serves more than 60,000 people.

The District has prepared this Water Comprehensive Plan (Plan) to identify projects and improvements to implement over the next 20 years to meet its present and future water supply and infrastructure needs. In order to support the projected population growth within the District's service area, the Plan identifies approaches to manage and provide water supply, comply with complex federal and state regulations, upgrade existing or construct new infrastructure, and protect existing sources of water supply.

The King County Comprehensive Plan (2016), City of Issaquah Comprehensive Plan (2017), and City of Sammamish Comprehensive Plan (2015) contain the most current planning information available for the District's service area and provide the planning information used as the basis for developing this Plan.

Most of the area within the District boundaries is designated as being within an Urban Growth Area (UGA) under the State Growth Management Act (GMA). As demonstrated by the District's water supply history, planned population growth is occurring and will continue to occur in this area. The King County Comprehensive Plan has directed that the planned growth in the UGA must be served by water supply systems. Projected population estimates were obtained from the Puget Sound Regional Council. In addition, District records of existing

customers and records of proposed developments were combined with geographic information system (GIS) property information to project growth over the next 20 years, through 2037. Details as to how population was projected for the Plateau Zone and Cascade View Zone are described in the Plan.

The District plans their water needs on the basis of equivalent residential units (ERUs) – the amount of water that has historically been required by a single family residence. The following table summarizes current and projected future population and ERUs to be served by the District.

Year	Population	ERUs
2018	61,014	23,514
2027	61,590	26,384
2037	61,417	26,835

The Plan includes a Capital Improvement Program (CIP) that contains a combination of several project components to upgrade existing facilities or construct new facilities. Included in the ten-year CIP are distribution projects (new distribution and transmission main upgrades and replacements) and ongoing annual renewal and replacement programs.

This Plan is a SEPA "non-project action," in that no specific project identified in the plan will be implemented or constructed without appropriate project and site-specific SEPA review. This SEPA checklist is intended to review the entire Plan conceptually, with an understanding that the individual project components identified in the Plan will be further defined in future designs at a level of detail appropriate to undergo separate project and site-specific SEPA review.

12. Location of the proposal. Give sufficient information for a person to understand the precise location of your proposed project, including a street address, if any, and section, township, and range, if known. If a proposal would occur over a range of area, provide the range or boundaries of the site(s). Provide a legal description, site plan, vicinity map, and topographic map, if reasonably available. While you should submit any plans required by the agency, you are not required to duplicate maps or detailed plans submitted with any permit applications related to this checklist. [help]

All components of the Plan are located within the District's service area, which is on the Sammamish Plateau and the eastern portion of Union Hill, as shown in figures in the Plan (specifically, see Figure 1-1, attached). The District is bounded by Lake Sammamish on the west and the Snoqualmie Valley on the east, and approximately NE 100th Street to the north, and I-90 to the south. The project area is located within Sections 1-17, 21-23, 27, and 28 of Township 24N, Range 6E; Sections 5-8 and 18 of Township 24N, Range 7E; Sections 1, 2, 11-14, 22-29, and 31-36 of Township 25N, Range 6E; and Section 30 and 31 of Township 25N, Range 7E.

B. ENVIRONMENTAL ELEMENTS [help]

1. Earth [help]

a. General description of the site: [help]

The Sammamish Plateau contains gently rolling hills ranging in elevation from 350 to 620 feet, with the southern part of the District sloping down toward the Issaquah Valley at an elevation of 30 to 75 feet. Future project and site-specific SEPA review will identify the topography of the site for each specific project.

(circle one): Flat, **rolling, hilly, steep slopes**, mountainous, other _____

b. What is the steepest slope on the site (approximate percent slope)? [help]

The project components will be designed to avoid steep slopes. Slope percent extents will be defined for each future project and are site-specific.

c. What general types of soils are found on the site (for example, clay, sand, gravel, peat, muck)? If you know the classification of agricultural soils, specify them and note any agricultural land of long-term commercial significance and whether the proposal results in removing any of these soils. [help]

Soil associations within the project area consist of Alderwood, Everett, Puget- Earlmont-Snohomish, and Alderwood-Kitsap-Indianola associations.

Alderwood soils are moderately well drained, undulating to hilly soils that have dense, very slowly permeable glacial till at a depth of 20 to 40 inches and located on uplands and terraces.

Everett soils are somewhat excessively drained, gravelly, gently undulating soils underlain by sand and gravel located on terraces.

Puget-Earlmont-Snohomish soils are poorly drained and somewhat poorly drained, nearly level soils that have layers of peat within a few feet of the surface located in major stream valleys.

Alderwood-Kitsap-Indianola soils are moderately well drained, nearly level to steep slope soils that have very slowly permeable glacial till or glacial lake deposits at a depth of 16 to 40 inches, and somewhat excessively drained, rolling, deep sandy soils located on uplands and terraces.

Future project and site-specific SEPA review will identify the specific soils located at each project site.

d. Are there surface indications or history of unstable soils in the immediate vicinity? If so, describe. [help]

Unstable soils will be identified under future project and site-specific SEPA review for each specific project site.

e. Describe the purpose, type, total area, and approximate quantities and total affected area of any filling, excavation, and grading proposed. Indicate source of fill. [help]

It will be necessary to excavate and backfill soils when upgrading existing facilities or

constructing new facilities as described in the Plan. Specific excavation, filling, and grading activities will be determined under future project and site-specific SEPA review for each project component.

Trench backfill will comply with the City of Sammamish, City of Issaquah, and King County requirements for imported backfill. Additional excavation would be required at pump station and storage tank sites. The source of the imported backfill would be determined by the Contractor for each project component.

f. Could erosion occur as a result of clearing, construction, or use? If so, generally describe. [help]

Erosion and sediment transport could occur during clearing and earth moving activities associated with trench excavation and pump station construction, material export, stockpiling, material import, and backfill operations. Exposed soils during excavation are subject to erosion prior to resurfacing or revegetation. Transfer of excavated and fill material both to and from construction could leave mud and excavated material on adjacent streets. However, erosion impacts could be reduced by the implementation of erosion and sedimentation control measures. Best management practices (BMPs), per King County regulations, would be used to further reduce erosion and stormwater impacts. No long term erosion is anticipated from any project component.

g. About what percent of the site will be covered with impervious surfaces after project construction (for example, asphalt or buildings)? [help]

The increase in impervious surface would result from paved access roads and from new pump stations. These facilities would account for only a small increase in impervious surface area. Specific impervious surface area will be determined under future project and site-specific SEPA review.

h. Proposed measures to reduce or control erosion, or other impacts to the earth, if any: [help]

Prior to and during construction and land clearing activities, a temporary erosion and sedimentation control plan (TESC Plan) would be prepared and implemented consistent with applicable City of Sammamish/King County/City of Issaquah drainage requirements and the King County Surface Water Design Manual.

Appropriate BMPs, such as silt fences, interceptor ditches, rock check dams, temporary sediment traps, straw bale diversion, gravel outlets, and temporary sediment ponds, would be installed to help prevent and control runoff and erosion of exposed soils during construction.

If excavated soils and imported materials are temporarily stockpiled along portions of the project, stockpiled materials would be covered with plastic during wet weather to minimize erosion. Stockpiling of materials adjacent to wetland areas would be avoided.

Native plant species, not including trees, would be planted along disturbed riparian corridors following completion of construction activities to provide long term erosion control.

Roads would be cleaned regularly at the point where trucks enter paved roadways and along existing roads where work is occurring.

Future project and site-specific SEPA review will identify the specific measure to reduce or control erosion based on the specific features of each project component.

2. Air [help]

a. What types of emissions to the air would result from the proposal during construction, operation, and maintenance when the project is completed? If any, generally describe and give approximate quantities if known. [help]

Depending on the season of construction, grading operations could result in temporary airborne dust particulates during dry construction. Exhaust from equipment during construction will be minimal. Periodic exercising of backup generators at the pump stations may generate small amounts of air emissions, and generators will be used during prolonged power outages. Properly operating pump stations are not anticipated to generate any noticeable odors.

Future project and site-specific SEPA review will identify any potential air emissions for each specific project component.

b. Are there any off-site sources of emissions or odor that may affect your proposal? If so, generally describe. [help]

No.

c. Proposed measures to reduce or control emissions or other impacts to air, if any: [help]

All equipment will be fitted with required muffler systems. Dust control methods will be employed as necessary. Future project and site-specific SEPA review will identify any measures to reduce or control air emissions for each specific project component.

3. **Water** [help]

a. Surface Water:

1) Is there any surface water body on or in the immediate vicinity of the site (including year-round and seasonal streams, saltwater, lakes, ponds, wetlands)? If yes, describe type and provide names. If appropriate, state what stream or river it flows into. [help]

A number of surface water bodies, including lakes, streams, and wetlands, are located within the District service area. Specific components of the plan will be designed to best avoid surface water bodies to the greatest extent possible, although there may be operational considerations that occasionally require work in and around surface water bodies. Future project and site-specific SEPA review will identify specific surface water bodies located on or near each specific project site.

2) Will the project require any work over, in, or adjacent to (within 200 feet) the described waters? If yes, please describe and attach available plans. [help]

Construction of project components within non-paved areas may require work within or adjacent to streams or wetlands. As individual components of the plan are designed for construction, future project and site-specific SEPA review will identify any potential impacts to streams or wetlands and appropriate mitigation measures for each specific project component.

3) Estimate the amount of fill and dredge material that would be placed in or removed from surface water or wetlands and indicate the area of the site that would be affected. Indicate the source of fill material. [help]

Filling and dredging of surface waters or wetlands may be required for specific project components. Facilities will be designed to best avoid impacts to surface water or wetlands to the greatest extent possible. Future project and site-specific SEPA review will identify any potential impacts to surface water or wetlands and any appropriate mitigation measures.

4) Will the proposal require surface water withdrawals or diversions? Give general description, purpose, and approximate quantities if known. [help]

The District has implemented two connections to the Regional Surface Water Supply through its membership in the Cascade Water Alliance (Cascade). Impacts associated with surface water withdrawals would be addressed under any Cascade or Seattle Public Utilities (current owner/operator of the surface water supply) SEPA review. Future project and site-specific SEPA review will identify any potential surface water withdrawals or diversions for each specific project component. Applicability will vary for each component.

5) Does the proposal lie within a 100-year floodplain? If so, note location on the site plan. [help]

100-year floodplains exist just south of Redmond Fall City Road and along lakes and streams located within and adjacent to the District boundaries. Flooding along some roads containing District facilities has historically occurred. Water facilities that are not located within roadways are not located within a 100-year floodplain.

6) Does the proposal involve any discharges of waste materials to surface waters? If so, describe the type of waste and anticipated volume of discharge. [help]

None of the components identified within the Plan are anticipated to discharge waste materials to surface waters. Future project and site-specific SEPA review will identify any potential for discharge of waste materials for each specific project.

b. Ground Water:

1) Will groundwater be withdrawn from a well for drinking water or other purposes? If so, give a general description of the well, proposed uses and approximate quantities withdrawn from the well. Will water be discharged to groundwater? Give general description, purpose, and approximate quantities if known. [help]

Yes. The District's existing wells currently withdraw groundwater to provide supply up to the associated water rights. In addition, the District's aquifer storage and recovery (ASR) program involves the injection of water into groundwater aquifers for the purpose of bolstering the reliability of the source aquifers and enhancing their supply capabilities. This program is regulated and permitted by the State Department of Ecology. The approvals necessary for full implementation of this program have not been obtained.

Future project and site-specific SEPA review will describe in greater detail the withdrawal of groundwater for each specific project.

2) Describe waste material that will be discharged into the ground from septic tanks or other sources, if any (for example: Domestic sewage; industrial, containing the following chemicals. . . ; agricultural; etc.). Describe the general size of the system, the number of such systems, the number of houses to be served (if applicable), or the number of animals or humans the system(s) are expected to serve. [help]

None of the project components identified in the Plan will discharge waste material into the ground. Future project and site-specific SEPA review will address any potential to discharge waste materials to the ground for each specific project.

c. Water runoff (including stormwater):

1) Describe the source of runoff (including storm water) and method of collection and disposal, if any (include quantities, if known). Where will this water flow? Will this water flow into other waters? If so, describe. [help]

Stormwater runoff from areas disturbed during construction of project components will be routed through erosion and sedimentation control facilities to prevent erosion and impacts to surface water bodies. Future project and site-specific SEPA review will identify specific stormwater runoff sources, quantities, and methods of collection and disposal for each specific project.

2) Could waste materials enter ground or surface waters? If so, generally describe. [help]

It is unlikely that waste materials would enter ground or surface waters from any of the project components. A small possibility exists that a small spill or release of fuel or oil from construction equipment could enter nearby streams and wetlands. Future project and site-specific SEPA review will identify any potential for waste materials entering ground or surface waters and appropriate mitigation for each specific project component.

3) Does the proposal alter or otherwise affect drainage patterns in the vicinity of the site? If so, describe. [help]

Future project and site-specific SEPA review will identify specific drainage pattern modifications for each specific project.

d. Proposed measures to reduce or control surface, ground, and runoff water, and drainage pattern impacts, if any: [help]

King County *Surface Water Design Manual*. Potential mitigation measures include the following:

- Prior to and during construction and land use clearing and modification of drainage pattern activities, a temporary erosion and sedimentation control plan would be prepared and implemented consistent with the requirements of the King County *Surface Water Design Manual* and any other drainage requirements that may be instituted in the future by the newly incorporated City of Sammamish or the City of Issaquah.

- Appropriate best management practices (BMPs), such as fences, interceptor ditches, rock check dams, temporary sediment traps, straw bale diversions, gravel outlets, and temporary

sediment ponds, would be installed to help prevent and control runoff and erosion of expelled soils during construction.

- If excavated soils and imported material are temporarily stockpiled along portions of the project, stockpiled materials would be covered with plastic sheeting during wet weather to prevent erosion. Stockpiling of excavated soils adjacent to wetland or stream areas would be avoided.

Future project and site-specific SEPA review will identify specific measures to reduce or control surface, ground, and runoff water impacts for each specific project component.

4. **Plants** [help]

a. Check the types of vegetation found on the site: [help]

__x__deciduous tree: alder, maple, aspen, other
__x__evergreen tree: fir, cedar, pine, other
__x__shrubs
__x__grass
__x__pasture
____crop or grain
____ Orchards, vineyards or other permanent crops.
__x__ wet soil plants: cattail, buttercup, bullrush, skunk cabbage, other
__x__water plants: water lily, eelgrass, milfoil, other
____other types of vegetation

b. What kind and amount of vegetation will be removed or altered? [help]

Project components will likely require some type of vegetation removal or alteration, depending upon the facility and the location. Pipelines will be located within disturbed rights-of-way to avoid alteration to vegetation to the extent possible. Future project and site-specific SEPA review will identify the types and amount of vegetation to be altered or removed for each specific project component.

c. List threatened and endangered species known to be on or near the site. [help]

Future project and site-specific SEPA review will request species database searches from US Fish and Wildlife Service and Washington State Department of Natural Resources, Natural Heritage Program to identify any threatened or endangered species on or near each specific project site.

d. Proposed landscaping, use of native plants, or other measures to preserve or enhance vegetation on the site, if any: [help]

Any measures to preserve or enhance vegetation as applicable will be identified in future project and site-specific SEPA review for each specific project.

e. List all noxious weeds and invasive species known to be on or near the site. [help]

Future project and site-specific SEPA review will address noxious weeds and invasive species known to be on or near the site for each specific project.

5. **Animals** [help]

a. List any birds and other animals which have been observed on or near the site or are known to be on or near the site. [help]

A survey of birds and animals in the service area was not performed. Several of the birds and animals listed may exist in the service area.

Examples include:

birds: **hawk, heron, eagle, songbirds**, other:
mammals: **deer, bear**, elk, **beaver,** other:
fish: **bass, salmon, trout**, herring, shellfish, other _____

b. List any threatened and endangered species known to be on or near the site. [help]

Future project and site-specific SEPA review will request species database searches from US Fish and Wildlife Service, National Marine Fisheries Service, and Washington State Department of Fish and Wildlife to identify any threatened or endangered species on or near each specific project site.

c. Is the site part of a migration route? If so, explain. [help]

Yes, the District area is a migration route for anadromous fish and migratory fowl. Future project and site-specific SEPA review will identify any species that use the specific project sites as part of a migratory route.

d. Proposed measures to preserve or enhance wildlife, if any: [help]

Any measures to preserve or enhance wildlife, as applicable, will be identified under future project and site-specific SEPA review for each project component.

e. List any invasive animal species known to be on or near the site. [help]

Future project and site-specific SEPA review will address invasive animal species known to be on or near the site for each specific project.

6. **Energy and Natural Resources** [help]

a. What kinds of energy (electric, natural gas, oil, wood stove, solar) will be used to meet the completed project's energy needs? Describe whether it will be used for heating, manufacturing, etc. [help]

Construction equipment used for clearing and grading activities, trench excavation and backfilling, and delivery of construction materials will use fossil fuel energy. Pump stations will use electric powered pumps with diesel-powered emergency back-up units. Telemetry systems at District water facilities also use electric energy.

b. Would your project affect the potential use of solar energy by adjacent properties? If so, generally describe. [help]

No.

c. What kinds of energy conservation features are included in the plans of this proposal? List other proposed measures to reduce or control energy impacts, if any: [help]

The District considers the use of high-efficiency pumps and motors when designing and constructing new facilities.

7. **Environmental Health** [help]

a. Are there any environmental health hazards, including exposure to toxic chemicals, risk of fire and explosion, spill, or hazardous waste, that could occur as a result of this proposal?
If so, describe. [help]

No. There are chemicals associated with water treatment (sodium hydroxide and sodium hypochlorite) but the chemicals used are nonhazardous when handled appropriately as identified in the District's Safety Manual and are under exempt quantities.

1) Describe any known or possible contamination at the site from present or past uses. [help]

Perfluorooctanesulfonic acid (PFOS) and perfluorooctanoic acid (PFOA) have been detected in the groundwater by the District and the City of Issaquah in wells in the Issaquah Valley Aquifer. Certain source water supplies for the District have concentrations of these contaminants well below the health advisory level. These contaminants are the subject of significant research across the United States and potential regulation under the Safe Drinking Water Act is being evaluated.

2) Describe existing hazardous chemicals/conditions that might affect project development and design. This includes underground hazardous liquid and gas transmission pipelines located within the project area and in the vicinity. [help]

Northwest Pipeline operates a natural gas pipeline that traverses the District from south to north, east of 228th Ave. This pipeline includes a lateral segment to the west toward E. Lake Sammamish Parkway at 17th Ave NE. Puget Sound Energy operates a natural gas pipeline from the Northwest Pipeline west along NE Union Hill Road.

3) Describe any toxic or hazardous chemicals that might be stored, used, or produced during the project's development or construction, or at any time during the operating life of the project. [help]

None are anticipated beyond those mentioned in 7.a. above.

4) Describe special emergency services that might be required. [help]

None are anticipated.

5) Proposed measures to reduce or control environmental health hazards, if any: [help]

The District has a Safety Manual and has prepared staff for workplace hazards in the following hazards: chemicals, confined space, and electrical. In addition, the District has the following documented safety measures: certifications and training; safety equipment; maintenance calibration and certifications for equipment; and numerous safety programs. The District is monitoring its supply for PFOS and PFOA and continuing to evaluate a long-range management strategy for use of the wells subject to this impact.

b. Noise [help]

1) What types of noise exist in the area which may affect your project (for example: traffic, equipment, operation, other)? [help]

None.

2) What types and levels of noise would be created by or associated with the project on a short-term or a long-term basis (for example: traffic, construction, operation, other)? Indicate what hours noise would come from the site. [help]

Noise due to construction will be short-term. Noise from pump stations will be appropriately mitigated, as necessary, to meet or exceed King County, City of Sammamish, and City of Issaquah noise ordinance requirements.

3) Proposed measures to reduce or control noise impacts, if any: [help]

Construction activity will meet federal, state, and local noise standards.

8. **Land and Shoreline Use** [help]

a. What is the current use of the site and adjacent properties? Will the proposal affect current land uses on nearby or adjacent properties? If so, describe. [help]

The District in general consists primarily of single-family residential land use. Current land uses of specific project sites and adjacent properties vary depending specific project components. Future project and site-specific SEPA review will identify current land use for each specific project.

b. Has the project site been used as working farmlands or working forest lands? If so, describe. How much agricultural or forest land of long-term commercial significance will be converted to other uses as a result of the proposal, if any? If resource lands have not been designated, how many acres in farmland or forest land tax status will be converted to nonfarm or nonforest use? [help]

There was a historical logging industry, but it was primarily gone by the mid 1900s. There was also a chicken farm industry, but there are no current working farmlands. There are also some properties with current equestrian uses. Future project and site-specific SEPA review will identify any working farm or forest lands on or around the site for each specific project.

1) Will the proposal affect or be affected by surrounding working farm or forest land normal business operations, such as oversize equipment access, the application of pesticides, tilling, and harvesting? If so, how: [help]

None known. Future project and site-specific SEPA review will identify any working farm or forest lands on or around the site for each specific project.

c. Describe any structures on the site. [help]

Structures located throughout the District area vary depending upon specific project components. Future project and site-specific SEPA review will identify any structures on site for each specific project.

d. Will any structures be demolished? If so, what? [help]

It is unlikely that any structures will need to be demolished. Future project and site- specific SEPA review will identify any structures to be demolished on site for each specific project.

e. What is the current zoning classification of the site? [help]

Zoning classifications throughout the District area vary depending upon specific project components. Future project and site-specific SEPA review will identify all zoning classifications on site for each specific project component.

f. What is the current comprehensive plan designation of the site? [help]

Comprehensive Plan designations throughout the District area vary depending upon specific project components. Future project and site-specific SEPA review will identify all applicable comprehensive plan designations (King County, City of Sammamish, or City of Issaquah) on site for each specific project component.

g. If applicable, what is the current shoreline master program designation of the site? [help]

Shoreline Master Program designations throughout the District area vary depending specific project components. Future project and site-specific SEPA review will identify all shoreline designations on site for each specific project component.

h. Has any part of the site been classified as a critical area by the city or county? If so, specify. [help]

The District area contains a variety of critical areas. Future project and site-specific SEPA review will identify all critical areas on site for each specific project site.

i. Approximately how many people would reside or work in the completed project? [help]

The Plan will provide water supply for a projected population of 61,417 people within the District's water service area in 2037. While the District anticipates significant additional development in its service area, the Puget Sound Regional Council forecasts a declining household population.

j. Approximately how many people would the completed project displace? [help]

It is unlikely that components of the Plan would result in displacements. Future project and site-specific SEPA review will identify any displacements resulting from each specific project component.

k. Proposed measures to avoid or reduce displacement impacts, if any: [help]

N/A.

L. Proposed measures to ensure the proposal is compatible with existing and projected land uses and plans, if any: [help]

The Plan is required to comply with applicable growth management plans and was developed using the King County, City of Sammamish, and City of Issaquah Comprehensive Plans. The Plan will require approval from Sammamish City Council, Issaquah City Council, King County, and the State Department of Health prior to implementation.

m. Proposed measures to ensure the proposal is compatible with nearby agricultural and forest lands of long-term commercial significance, if any: [help]

Future project and site-specific SEPA review will identify any working farmlands on or around the site for each specific project.

9. **Housing** [help]

a. Approximately how many units would be provided, if any? Indicate whether high, middle, or low-income housing. [help]

None.

b. Approximately how many units, if any, would be eliminated? Indicate whether high, middle, or low-income housing. [help]

None.

c. Proposed measures to reduce or control housing impacts, if any: [help]
N/A.

10. **Aesthetics** [help]

a. What is the tallest height of any proposed structure(s), not including antennas; what is the principal exterior building material(s) proposed? [help]

Height of component structures and principal exterior building materials will vary depending on the project component and the design. Above ground facilities would consist of pump stations and a future storage tank. Future project and site-specific SEPA review will identify the tallest height of any proposed structure and the principal exterior building material for each specific project.

b. What views in the immediate vicinity would be altered or obstructed? [help]

The above ground components would be designed to best minimize the alteration or obstruction of views. Future project and site-specific SEPA review will identify any views that could be altered or obstructed for each specific project.

c. Proposed measures to reduce or control aesthetic impacts, if any: [help]

Future project and site-specific SEPA review will identify any proposed measures to reduce or control aesthetic impacts, if applicable, for each specific project.

11. **Light and Glare** [help]

a. What type of light or glare will the proposal produce? What time of day would it mainly occur? [help]

Light and glare could only result from above ground components. Pump stations would be designed to minimize the potential for light and glare. Future project and site-specific SEPA review will identify any impacts from light and glare for each specific project.

b. Could light or glare from the finished project be a safety hazard or interfere with views? [help]

Future project and site-specific SEPA review will identify any safety hazards resulting from light and glare for each specific project.

c. What existing off-site sources of light or glare may affect your proposal? [help]

None.

d. Proposed measures to reduce or control light and glare impacts, if any: [help]

Any measures to reduce or control light and glare impacts, if applicable, will be identified under future project and site-specific SEPA review for each specific project.

12. **Recreation** [help]

a. What designated and informal recreational opportunities are in the immediate vicinity? [help]

Recreational opportunities throughout the District area vary. Project components would be designed to minimize potential impacts to recreational opportunities. Future project and site-specific SEPA review will identify any recreational opportunities in the immediate vicinity of each specific project.

b. Would the proposed project displace any existing recreational uses? If so, describe. [help]

Future project and site-specific SEPA review will identify any displaced recreational uses for each specific project.

c. Proposed measures to reduce or control impacts on recreation, including recreation opportunities to be provided by the project or applicant, if any: [help]

Proposed measures to reduce or control impacts to recreation, as applicable, will be identified under future project and site-specific SEPA review for each specific project.

13. **Historic and cultural preservation** [help]

a. Are there any buildings, structures, or sites, located on or near the site that are over 45 years old listed in or eligible for listing in national, state, or local preservation registers located on or near the site? If so, specifically describe. [help]

Project components will be designed to avoid impacts to historic and cultural resources to the greatest extent possible. Future project and site-specific SEPA review will identify any places or objects proposed for or listed on any preservation registers on or near the site for each specific project.

b. Are there any landmarks, features, or other evidence of Indian or historic use or occupation? This may include human burials or old cemeteries. Are there any material evidence, artifacts, or areas of cultural importance on or near the site? Please list any professional studies conducted at the site to identify such resources. [help]

Future project and site-specific SEPA review will identify sites or evidence of cultural importance on or near the site for each specific project.

c. Describe the methods used to assess the potential impacts to cultural and historic resources on or near the project site. Examples include consultation with tribes and the department of archeology and historic preservation, archaeological surveys, historic maps, GIS data, etc. [help]

Measures to reduce or control impacts to cultural resources will be identified in future project and site-specific SEPA review for each specific project.

d. Proposed measures to avoid, minimize, or compensate for loss, changes to, and disturbance to resources. Please include plans for the above and any permits that may be required. [help]

Measures to avoid, minimize or compensate for impacts to cultural resources will be identified in future project and site-specific SEPA review for each specific project.

14. **Transportation** [help]

a. Identify public streets and highways serving the site or affected geographic area and describe proposed access to the existing street system. Show on site plans, if any. [help]

Most of the underground pipeline improvements would be located within existing public roadways, as shown in figures in the Plan. Access to the existing street system for each project component will be identified in future project and site- specific SEPA review for each project.

b. Is the site or affected geographic area currently served by public transit? If so, generally describe. If not, what is the approximate distance to the nearest transit stop? [help]

The District is served by public transit; however specific transit stops would be identified under future project and site-specific SEPA review for each specific project.

c. How many additional parking spaces would the completed project or non-project proposal have? How many would the project or proposal eliminate? [help]

Most components would not require parking spaces or eliminate parking spaces. Future project and site-

specific SEPA review will identify any parking spaces created or eliminated by each specific project.

d. Will the proposal require any new or improvements to existing roads, streets, pedestrian, bicycle or state transportation facilities, not including driveways? If so, generally describe (indicate whether public or private). [help]

Most components would not require new roads or streets, or improvements to existing roads or streets. Construction of underground pipelines in public roadways would require restoring to existing conditions. Future project and site-specific SEPA review will identify new roads or streets or improvements required by each specific project.

e. Will the project or proposal use (or occur in the immediate vicinity of) water, rail, or air transportation? If so, generally describe. [help]

It is unlikely that any project components will use water, rail, or air transportation. Future project and site-specific SEPA review will identify any parking spaces created or eliminated by each specific project.

f. How many vehicular trips per day would be generated by the completed project or proposal? If known, indicate when peak volumes would occur and what percentage of the volume would be trucks (such as commercial and nonpassenger vehicles). What data or transportation models were used to make these estimates? [help]

Any project component would require minimal vehicle trips, mostly for structure maintenance. Future project and site-specific SEPA review will identify vehicle trips per day generated by each specific project.

g. Will the proposal interfere with, affect or be affected by the movement of agricultural and forest products on roads or streets in the area? If so, generally describe. [help]

No. Any project-specific impacts would be identified under future project and site-specific SEPA review for each specific project.

h. Proposed measures to reduce or control transportation impacts, if any: [help]

Any measures required to reduce or control transportation impacts would be identified under future project and site-specific SEPA review for each specific project.

15. **Public Services** [help]

a. Would the project result in an increased need for public services (for example: fire protection, police protection, public transit, health care, schools, other)? If so, generally describe. [help]

The Plan will meet the increased need for public water supply for the District. It is not anticipated that any components of the project would result in an increased need for other public services. Future project and site-specific SEPA review will identify the potential to increase the need for public services for each specific project.

b. Proposed measures to reduce or control direct impacts on public services, if any. [help]

Any measures required to reduce or control impacts on public services would be identified under future

project and site-specific SEPA review for each specific project.

16. **Utilities** [help]

a. Circle utilities currently available at the site: [help]

Electricity, natural gas, water, refuse service, telephone, sanitary sewer, septic system,
other cable

Future project and site-specific SEPA review will identify the specific utilities available at each specific project site.

b. Describe the utilities that are proposed for the project, the utility providing the service, and the general construction activities on the site or in the immediate vicinity which might be needed. [help]

The project is planning for the District to supply water to its customers over the next 20 years. Construction activities required will include clearing, grading, grubbing, trenching, and excavating. Pipelines will be constructed underground, whereas pump stations will be above ground. Specific construction activities will be identified under future project and site-specific SEPA review for each specific project component.

C. Signature [help]

The above answers are true and complete to the best of my knowledge. I understand that the lead agency is relying on them to make its decision.

Signature: Rodney Langer

Name of signee Rodney Langer

Position and Agency/Organization Project Manager, CHS Engineers, LLC

Date Submitted: January 27, 2019

D. supplemental sheet for nonproject actions [help]

(**IT IS NOT NECESSARY** to use this sheet for project actions)

Because these questions are very general, it may be helpful to read them in conjunction with the list of the elements of the environment.

When answering these questions, be aware of the extent the proposal, or the types of activities likely to result from the proposal, would affect the item at a greater intensity or at a faster rate than if the proposal were not implemented. Respond briefly and in general terms.

1. How would the proposal be likely to increase discharge to water; emissions to air; production, storage, or release of toxic or hazardous substances; or production of noise?

Water service alone does not cause any of the mentioned situations. Some minor temporary impacts

may occur during construction.

Proposed measures to avoid or reduce such increases are:

Proper construction practices will avoid or reduce temporary impacts.

2. How would the proposal be likely to affect plants, animals, fish, or marine life?

Recommendations proposed in this Plan are not anticipated to affect plants, animals, fish, or marine life. Measures for protection or conservation should be considered during design.

Proposed measures to protect or conserve plants, animals, fish, or marine life are:

Design decisions and construction procedures should follow all proper procedures and practices to minimize impacts on plants, animals, fish, and marine life.

3. How would the proposal be likely to deplete energy or natural resources?

Energy will be used to construct new facilities and operate equipment after facilities are constructed. Proposed measures to protect and conserve energy and natural resources are: Appropriate reviews, approvals, and permits will be obtained before planned construction projects. The Plan includes a water conservation plan identifying activities to be performed by the District. Energy-efficient equipment should be considered whenever possible.

Energy consumption will correspond with production associated with water rights and system demands to meet public water supply needs

Proposed measures to protect or conserve energy and natural resources are:

Specific projects will be evaluated for opportunity, cost and benefit of implementation of conservation measures.

4. How would the proposal be likely to use or affect environmentally sensitive areas or areas designated (or eligible or under study) for governmental protection; such as parks, wilderness, wild and scenic rivers, threatened or endangered species habitat, historic or cultural sites, wetlands, floodplains, or prime farmlands?

No effects are anticipated.

Proposed measures to protect such resources or to avoid or reduce impacts are:

All regulations concerning sensitive or protected areas will be followed.

5. How would the proposal be likely to affect land and shoreline use, including whether it would allow or encourage land or shoreline uses incompatible with existing plans?

The Plan is compatible with all existing and proposed land use plans.

Proposed measures to avoid or reduce shoreline and land use impacts are:

Does not apply.

6. How would the proposal be likely to increase demands on transportation or public services and utilities?

The Plan proposes to respond to a projected increase in needs for water service resulting from projected population growth in the service area. Increase in demands on public services and utilities resulting from growth will be determined by zoning, land use, and restrictions or needs. Water service in itself will not increase the demand for public services.

Proposed measures to reduce or respond to such demand(s) are:

Source enhancement and transmission and distribution improvements.

7. Identify, if possible, whether the proposal may conflict with local, state, or federal laws or requirements for the protection of the environment.

The Plan is consistent with good management practices for water resources and does not conflict with current laws and regulations. The Plan conforms with all laws and requirements for the protection of the environment.

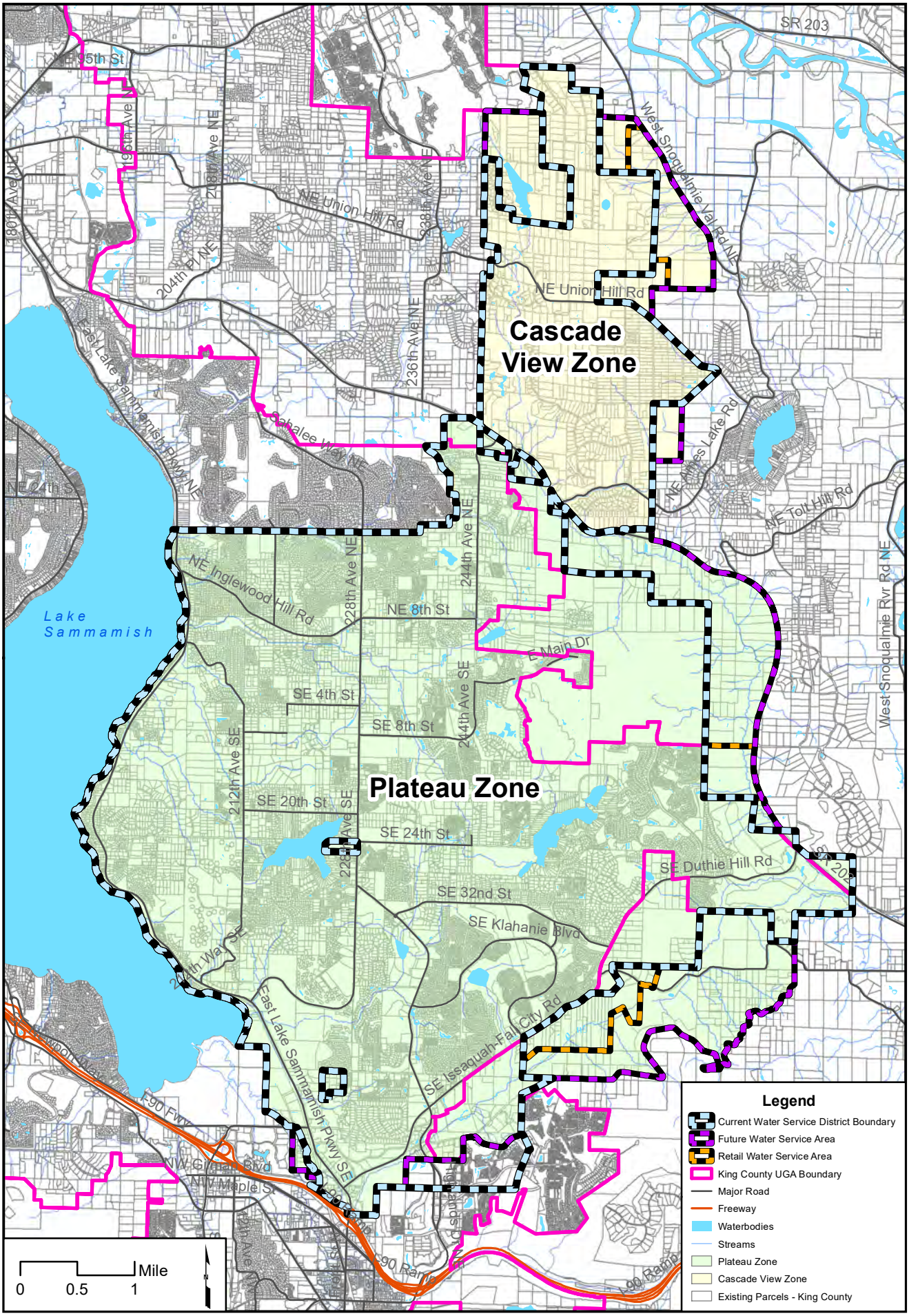

CHS ENGINEERS

Sammamish Plateau Water

Service Area Boundaries

FIGURE 1-1

Water Comprehensive Plan

This page intentionally left blank.

Appendix V

Draft Plan Comments and Responses

This page intentionally left blank.

Washington State Department of Health

Division of Environmental Health
Office of Drinking Water

Local Government Consistency Determination Form

Water System Name: Sammamish Plateau Water & Sewer District PWS ID: 409009

Planning/Engineering Document Title: Water Comprehensive Plan Plan Date: December 2018

Local Government with Jurisdiction Conducting Review: City of Issaquah

Before the Department of Health (DOH) approves a planning or engineering submittal under Section 100 or Section 110, the local government must review the documentation the municipal water supplier provides to prove the submittal is consistent with **local comprehensive plans, land use plans and development regulations** (WAC 246-290-108). Submittals under Section 105 require a local consistency determination if the municipal water supplier requests a water right place-of-use expansion. The review must address the elements identified below as they relate to water service.

By signing this form, the local government reviewer confirms the document under review is consistent with applicable local plans and regulations. If the local government reviewer identifies an inconsistency, he or she should include the citation from the applicable comprehensive plan or development regulation and explain how to resolve the inconsistency, or confirm that the inconsistency is not applicable by marking N/A. See more instructions on reverse.

	For use by water system	For use by local government
Local Government Consistency Statement	**Identify the page(s) in submittal**	**Yes or Not Applicable**
a) The water system service area is consistent with the adopted land use and zoning within the service area.	See Note A	Yes
b) The growth projection used to forecast water demand is consistent with the adopted city or county's population growth projections. If a different growth projection is used, provide an explanation of the alternative growth projection and methodology.	See Note B	Yes
c) For cities and towns that provide water service: All water service area policies of the city or town described in the plan conform to all relevant utility service extension ordinances.	N/A	Yes
d) Service area policies for new service connections conform to the adopted local plans and adopted development regulations of all cities and counties with jurisdiction over the service area.	See Note C	Yes
e) Other relevant elements related to water supply are addressed in the water system plan, if applicable. This may include Coordinated Water System Plans, Regional Wastewater Plans, Reclaimed Water Plans, Groundwater Management Area Plans, and the Capital Facilities Element of local comprehensive plans.	See Note D	Yes

I certify that the above statements are true to the best of my knowledge and that these specific elements are consistent with adopted local plans and development regulations.

Robert J. York

Signature

6/11/2019

Date

Robert J. York, Engg Manager, Public Works, City of Issaquah

Printed Name, Title, & Jurisdiction

Consistency Review Guidance

For Use by Local Governments and Municipal Water Suppliers

This checklist may be used to meet the requirements of WAC 246-290-108. When using an alternative format, it must describe all of the elements; 1a), b), c), d), and e), when they apply.

For **water system plans (WSP)**, a consistency review is required for the service area and any additional areas where a municipal water supplier wants to expand its water right's place of use.

For **small water system management programs**, a consistency review is only required for areas where a municipal water supplier wants to expand its water right's place-of-use. If no water right place-of-use expansion is requested, a consistency review is not required.

For **engineering documents,** a consistency review is required for areas where a municipal water supplier wants to expand its water right's place-of-use (water system plan amendment is required). For noncommunity water systems, a consistency review is required when requesting a place-of-use expansion. All engineering documents must be submitted with a service area map (WAC 246-290-110(4)(b)(ii)).

A) Documenting Consistency: The planning or engineering document must include the following when applicable.

a) A copy of the adopted **land use/zoning** map corresponding to the service area. The uses provided in the WSP should be consistent with the adopted land use/zoning map. Include any other portions of comprehensive plans or development regulations that relate to water supply planning.

b) A copy of the **growth projections** that correspond to the service area. If the local population growth projections are not used, explain in detail why the chosen projections more accurately describe the expected growth rate. Explain how it is consistent with the adopted land use.

c) Include water service area policies and show that they are consistent with the **utility service extension ordinances** within the city or town boundaries. *This applies to cities and towns only.*

d) All **service area policies** for how new water service will be provided to new customers.

e) **Other relevant elements** the Department of Health determines are related to water supply planning. See Local Government Consistency – Other Relevant Elements, Policy B.07, September 2009.

B) Documenting an Inconsistency: Please document the inconsistency, include the citation from the comprehensive plan or development regulation, and explain how to resolve the inconsistency.

C) Documenting a Lack of Local Review for Consistency: Where the local government with jurisdiction did not provide a consistency review, document efforts made and the amount of time provided to the local government for review. Please include: name of contact, date, and efforts made (letters, phone calls, and emails). To self-certify, please contact the DOH Planner.

The Department of Health is an equal opportunity agency. For persons with disabilities, this document is available on request in other formats. To submit a request, please call 1-800-525-0127 (TTY 1-800-833-6388).

City of Sammamish Washington

Department of Community Development

801 228th Avenue SE ■ Sammamish, WA 98075 ■ phone: 425-295-0500 ■ fax: 295-295-0600 ■ web: www.sammamish.us

April 30, 2019

Jay Regenstreif
Sammamish Plateau Water
1510 228th Avenue SE
Sammamish, WA 98075

Re. Sammamish Plateau Water and Sewer District - 2018 Comprehensive Plan Draft Review

Dear Ms. Regenstreif,

The City of Sammamish has reviewed the Sammamish Plateau Water & Sewer District's 2018 draft Water Comprehensive Plan, received by our office on February 26, 2019. This Plan was reviewed by comparison to the Sammamish Comprehensive Plan, Land Use Plan and Zoning Map, and Development Regulations pursuant to WAC 246-290-108. We discussed our review of the 2018 Draft Water Comprehensive Plan with David Pyle, Deputy Director of the Community Development; Andrew Zagars, City Engineer; Kellye Hilde, Planning Manager; Tawni Dalziel, Senior Stormwater Program Manager; Miryam Laytner, Sr. Management Analyst; Sara Estiri, Management Analyst on April 17, 2019.

As a result of our review, we have 18 comments that have been identified in the enclosure. Please note that we signed the Local Government Consistency Determination Form under the condition that Sammamish Plateau Water & Sewer District revises and incorporates our comments and without other significant changes.

We request that when the Sammamish Plateau Water and Sewer District revises the 2018 Draft Comprehensive Plan, a copy of the draft be provided to us for our final review.

Please let us know if you note any inaccuracies or have any questions regarding the comments provided in the Local Government Consistency Determination Form. Please contact Kellye Hilde, Planning Manager at 425-295-0582 or khilde@sammamish.us.

Kellye Hilde
Planning Manager, ASLA
Department of Community Development

Enclosure:
Local Government Consistency Determination Form
City of Sammamish Staff Comments

Washington State Department of Health

Division of Environmental Health
Office of Drinking Water

Local Government Consistency Determination Form

Water System Name: Sammamish Plateau Water & Sewer District PWS ID: 409009

Planning/Engineering Document Title: Water Comprehensive Plan Plan Date: December 2018

Local Government with Jurisdiction Conducting Review: City of Sammamish

Before the Department of Health (DOH) approves a planning or engineering submittal under Section 100 or Section 110, the local government must review the documentation the municipal water supplier provides to prove the submittal is consistent with **local comprehensive plans, land use plans and development regulations** (WAC 246-290-108). Submittals under Section 105 require a local consistency determination if the municipal water supplier requests a water right place-of-use expansion. The review must address the elements identified below as they relate to water service.

By signing this form, the local government reviewer confirms the document under review is consistent with applicable local plans and regulations. If the local government reviewer identifies an inconsistency, he or she should include the citation from the applicable comprehensive plan or development regulation and explain how to resolve the inconsistency, or confirm that the inconsistency is not applicable by marking N/A. See more instructions on reverse.

Local Government Consistency Statement	For use by water system Identify the page(s) in submittal	For use by local government Yes or Not Applicable
a) The water system service area is consistent with the adopted land use and zoning within the service area.	See Note A	Yes Please see staff comments
b) The growth projection used to forecast water demand is consistent with the adopted city or county's population growth projections. If a different growth projection is used, provide an explanation of the alternative growth projection and methodology.	See Note B	Yes Please see staff comments
c) For cities and towns that provide water service: All water service area policies of the city or town described in the plan conform to all relevant utility service extension ordinances.	N/A	N/A
d) Service area policies for new service connections conform to the adopted local plans and adopted development regulations of all cities and counties with jurisdiction over the service area.	See Note C	Yes Please see staff comments
e) Other relevant elements related to water supply are addressed in the water system plan, if applicable. This may include Coordinated Water System Plans, Regional Wastewater Plans, Reclaimed Water Plans, Groundwater Management Area Plans, and the Capital Facilities Element of local comprehensive plans.	See Note D	Yes Please see staff comments

I certify that the above statements are true to the best of my knowledge and that these specific elements are consistent with adopted local plans and development regulations.

K Hilde 4.30.19

Signature Date

Kellye Hilde, Planning Manager, City of Sammamish

Printed Name, Title, & Jurisdiction

Consistency Review Guidance

For Use by Local Governments and Municipal Water Suppliers

This checklist may be used to meet the requirements of WAC 246-290-108. When using an alternative format, it must describe all of the elements; 1a), b), c), d), and e), when they apply.

For **water system plans (WSP)**, a consistency review is required for the service area and any additional areas where a municipal water supplier wants to expand its water right's place of use.

For **small water system management programs**, a consistency review is only required for areas where a municipal water supplier wants to expand its water right's place-of-use. If no water right place-of-use expansion is requested, a consistency review is not required.

For **engineering documents,** a consistency review is required for areas where a municipal water supplier wants to expand its water right's place-of-use (water system plan amendment is required). For noncommunity water systems, a consistency review is required when requesting a place-of-use expansion. All engineering documents must be submitted with a service area map (WAC 246-290-110(4)(b)(ii)).

A) **Documenting Consistency:** The planning or engineering document must include the following when applicable.

   a) A copy of the adopted **land use/zoning** map corresponding to the service area. The uses provided in the WSP should be consistent with the adopted land use/zoning map. Include any other portions of comprehensive plans or development regulations that relate to water supply planning.

   b) A copy of the **growth projections** that correspond to the service area. If the local population growth projections are not used, explain in detail why the chosen projections more accurately describe the expected growth rate. Explain how it is consistent with the adopted land use.

   c) Include water service area policies and show that they are consistent with the **utility service extension ordinances** within the city or town boundaries. *This applies to cities and towns only.*

   d) All **service area policies** for how new water service will be provided to new customers.

   e) **Other relevant elements** the Department of Health determines are related to water supply planning. See Local Government Consistency – Other Relevant Elements, Policy B.07, September 2009.

B) **Documenting an Inconsistency:** Please document the inconsistency, include the citation from the comprehensive plan or development regulation, and explain how to resolve the inconsistency.

C) **Documenting a Lack of Local Review for Consistency:** Where the local government with jurisdiction did not provide a consistency review, document efforts made and the amount of time provided to the local government for review. Please include: name of contact, date, and efforts made (letters, phone calls, and emails). To self-certify, please contact the DOH Planner.

The Department of Health is an equal opportunity agency. For persons with disabilities, this document is available on request in other formats. To submit a request, please call 1-800-525-0127 (TTY 1-800-833-6388).

Notes for
Department of Health Local Government Consistency Determination Forms

Water System Name:	Sammamish Plateau Water & Sewer
PWS ID:	40900 9
Planning Document:	Water Comprehensive Plan
Plan Date:	December 2018
Local Governments:	City of Sammamish, City of Issaquah, King County

Notes:

A. Service Area and Land Use and Zoning:
   a. Figures 1-1, 1-13 and 1-14.
   b. Chapter 1 pages 1-14, 1-26, 1-38,
   c. Chapter 2 pages: 2-19 through 2-24
B. Growth Projection:
   a. Chapter 2 pages: 2-14 through 2-24
C. Service Area Policies
   a. Chapter 1 pages: 1-34 through 1-46 and referenced appendices
D. Other Elements:
   a. Coordinated Water System Plan: Pages 1-14, 1-28, 1-31, 1-33
   b. Reclaimed Water Plans: Page 4-48 and Appendix N

801 228th Avenue SE ■ Sammamish, WA 98075 ■ phone: 425-295-0500 ■ fax: 295-295-0600 ■ web: www.sammamish.us

d) Service area policies for new service connections conform to the adopted local plans and adopted development regulations of all cities and counties with jurisdiction over the service area.

Staff Comments

1. Chapter 1, Page 1-37: A map identifying Group B wells locations should be included in this Plan as well as a description of how they are managed.
2. Chapter 1, Page 1-38: Urban Growth Area.
3. Chapter 1, Page 1-38: Please integrate language around plans to sign a Franchise Agreement with the City of Sammamish.
4. Chapter 1, Page 1-38: Drinking Water Quality;
    a. Describe the District's water quality monitoring program and/or plan for drinking water.
    b. Describe how the District addresses Department of Ecology mandates for low impact development and the impacts on groundwater. Reference or provide studies that demonstrate any negative impacts.
    c. Describe the District's long-term sustainability plan for aquifer recharge areas.
5. Chapter 1, Page 1-39: Oversizing;
    a. Provide a reference to a facility plan that shows where oversizing might be necessary.
    b. Describe the method for determining and identifying mainlines that may need to be oversized.

---

e) Other relevant elements related to water supply are addressed in the water system plan, if applicable. This may include Coordinated Water System Plans, Regional Wastewater Plans, Reclaimed Water Plans, Groundwater Management Area Plans, and the Capital Facilities Element of local comprehensive plans.

Staff Comments

1. Please indicate how you determine when to bring in or tap into the Cascade Water Alliance source. Are there any additional costs to do this?
2. CARA Map:
    a. Please provide your timeline for updating the CARA map.
    b. What is the scope of work?
    c. Please provide any updated policy to the City of Sammamish that may require review and updates to our development regulations.
    d. The City would like that District take ownership of the CARA maps.
3. Table 5-3 page 5-20, Agencies and First Responders: Please add City of Sammamish to the list.
4. Chapter 1, Section 1.7: Is there a need to include a section for the City of Sammamish? While the area is within the Plateau Zone, we do coordinate interlocal agreements (ILA) and are currently drafting up a Franchise Agreement between the City and SPWS.

City of Sammamish
Department of Community Development
801 228th Avenue SE ■ Sammamish, WA 98075 ■ phone: 425-295-0500 ■ fax: 295-295-0600 ■ web: www.sammamish.us

City of Sammamish
Staff Comments

a) The water system service area is consistent with the adopted land use and zoning within the service area.

Staff Comments

1. Chapter 1, Page 1-2, Figure 1-1: Overlapping adjacent service providers needs to be noted on this map or a new map added. A narrative describing the method of resolving conflicts in these overlapping areas also needs to be added.
2. Chapter 1, Page 1-2, Figure 1-1: Show the UGA and City boundary on this map.
3. Chapter 1, Page 1-26: Describe the PAAs (Evans Creek Preserve Trail, Swan Ridge neighborhood, 30-Acres Park, Aldarra Golf Club), Urban Growth Boundary, and Town Center sub-area.
4. Chapter 1,Page 1-26: The moratorium has been repealed, refer to Ordinance O2018-479.
5. Chapter 1, Page 1-26: Sammamish Plans that should be referenced include the following:
    a. Sammamish Storm and Surface Water Management Comprehensive Plan.
    b. Ordinance O2016-424.
    c. City of Sammamish Town Center Sub-Area.
    d. Capital Improvement Plans as adopted by the City, Resolution R2016-2022.
6. Chapter 1, Page 1-30, Figure 1-13: The R-4 interim and R-6 interim zones are not shown.
7. Chapter 1, Page 1-32, Figure 1-14: The City Boundary and UGA line are not shown. The current Water Service District Boundary in south-west Sammamish is not shown. (near MacDonald area)

---

b) The growth projection used to forecast water demand is consistent with the adopted city or county's population growth projections. If a different growth project is used, provide an explanation of the alternative growth project and methodology.

Staff Comments

1. Chapter 2, Page 2-19: Why are the multifamily numbers for Sammamish decreasing starting in 2023?
2. Chapter 2, Page 2-19, Table 2-11: Use one source of data and sort in ascending order. Move year 2040 to the end of the table.
3. Chapter 2, Page 2-21: Stating that population in our area is declining contradicts PSRC current projections that the region needs a plan for 1.8 million additional people and 1.2 million new jobs by 2050. Refer to the Vision 2050 Executive Summary, page ES-1 and the Draft SEIS.

2018 WATER COMPREHENSIVE PLAN
PUBLIC MEETING RECORD

1. SPWSD Board of Commissioner Minutes setting Public Meeting Date and Time
2. Public Meeting Announcement – posted at District Headquarters
3. Public Meeting Website Notice
4. Newspaper Display Ad – Issaquah Reporter and Redmond Reporter
5. Newspaper Legal Notice – Seattle Times
6. Public Meeting Sign-in Sheet
7. Public Meeting Executive Summary Handout
8. Public Meeting Presentation Outline
9. SPWSD Board of Commissioner Minutes of Public Meeting

2018 WATER COMPREHENSIVE PLAN
PUBLIC MEETING RECORD

1. SPWSD Board of Commissioner February 25, 2019 Minutes

   Setting Public Meeting Date and Time for March 11, 2019 at 5:30 PM

There was Board consensus to consider the outreach experiment for the customer portal rather than the Program.

D. 2018 WATER COMPREHENSIVE PLAN – ADOPT FOR PUBLIC DISTRIBUTION

Regenstreif requested the Board adopt the 2018 Water Comprehensive Plan (Plan) for public distribution and set a public information meeting date to present the Plan to the public. Regenstreif noted that minor edits had been made to the proposed resolution.

- **Motion:** Commissioner Hooshangi made a motion to adopt Resolution No. 4851 to approve the Plan for public distribution. Commissioner Shustov seconded the motion. **The motion carried unanimously.**

- **Motion:** Commissioner Hooshangi made a motion to set the public information meeting date for the Plan for March 11, 2019 at 6:00 p.m. as part of the regular Board meeting scheduled for that date. Commissioner Harman seconded the motion. **The motion carried unanimously.**

E. DRAFT CITY OF ISSAQUAH INTERLOCAL AGREEMENT

- **Motion:** Commissioner Hooshangi made a motion authorizing the General Manager and the Board President to provide the draft interlocal agreement regarding governance discussions with the City of Issaquah. Commissioner Harman seconded the motion.
  The motion carried unanimously.

ATTORNEY/MANAGER/COMMISSIONER REPORTS

Attorney

- Provided a handout to the Board that compliments the Board's discussion earlier in today's meeting about the proposed low-income rebate program outreach experiment. The handout was a copy of outreach material, containing multiple languages relevant to the diverse customer base of the service area, provided to customers regarding another water district's merger. He reported that having multiple languages may have contributed to having a greater voter response.

General Manager

- No report.

Commissioners

- **Motion:** Commissioner Hooshangi made a motion to excuse Commissioner Mahbubul Islam's absence from today's regular meeting. Commissioner Harman seconded the motion.
  The motion carried unanimously.

2018 WATER COMPREHENSIVE PLAN
PUBLIC MEETING RECORD

2. Public Meeting Announcement – posted at District Headquarters

February 26, 2019 through March 11, 2019

Sammamish Plateau Water

Public Meeting Announcement

The Board of Commissioners of
Sammamish Plateau Water is holding
a Public Meeting on the following item:

2018 Water Comprehensive Plan

March 11, 2019 – 6:00 pm

District Headquarters
1510 228th Avenue SE
Sammamish, WA 98075

The purpose of the Public Meeting is to present highlights of the 2018 Water Comprehensive Plan. The plan considers all aspects of water service delivery, and describes long-term strategies to maintain water quality, meet present and future infrastructure needs, and comply with state and federal regulations.

We welcome public comment. Information and instructions on how to submit comments to the District is available on our website at spwater.org or by calling (425) 392-6256. **Deadline for public comment is June 11, 2019.**

2018 WATER COMPREHENSIVE PLAN
PUBLIC MEETING RECORD

3. Public Meeting Sammamish Plateau Website Notice

February 25, 2019 through March 11, 2019

spwater.org

Home Page: from 2/25/2019 to 3/11/2019

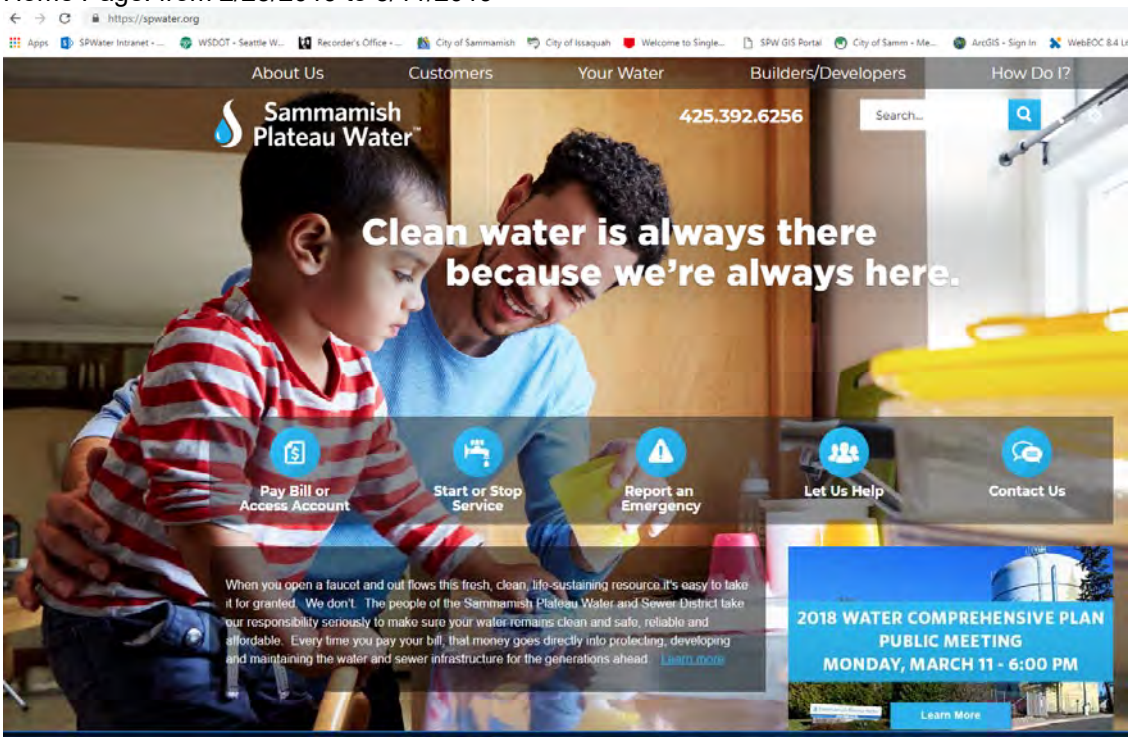

NEWS AND EVENTS PAGE: from 2/25/2019 to 3/11/2019

Home › News and Events

News and Events

Posted on: February 25, 2019

2018 Water Comprehensive Plan - Public Meeting 3/11 at 6pm

The District's Board of Commissioners has scheduled a Public Meeting for **Monday, March 11, 2019 at 6:00 pm** at the District offices located at 1510 228th Ave SE. The purpose of the Public Meeting is to present highlights of the 2018 Water Comprehensive Plan. The plan considers all aspects of water service delivery, and describes long-term strategies to maintain water quality, meet present and future infrastructure needs, and comply with state and federal regulations.

We welcome public comment. The 2018 Water Comprehensive Plan with instructions on how to submit comments to the District is available by following this link.

Deadline for public comment is June 11, 2019.

Water Comprehensive Plan Page

Water Comprehensive Plan

2018 Water Comprehensive Plan

On February 25, 2019 the Sammamish Plateau Water & Sewer District Board of Commissioners adopted the 2018 Water Comprehensive Plan for Public Distribution (2018 Plan). The 2018 Plan is comprehensive, considering all aspects of provision of water service, and describes the strategies that the District plans to implement over the next 20 years to continue to supply high quality water to its customers, meet its present and future supply and infrastructure needs and continue to comply with complex federal and state water quality regulations.

The 2018 Plan is now being provided for comment, with comments requested by June 11, 2019.

Pursuant to the Washington Public Disclosure Act, written comments constitute a public record, subject to public release. Comments on the 2018 Plan can be provided to the District by:

US Mail: Sammamish Plateau Water
Attn: Jay Regenstreif
1510 228th Ave SE
Sammamish, WA 98075
Via Email: jay.regenstreif@spwater.org

A Public Meeting will be held at the District office on March 11, 2019, starting at 6 PM. The meeting will include a presentation of a highlights from the 2018 Plan.

The 2018 Plan is available here for review:
PLEASE NOTE: Some of these files are large and may take several minutes to download. We appreciate your patience!

2018 WCP Table of Contents and Executive Summary
2018 Chapter 1 – Description of Water System
2018 Chapter 2 – Basic Planning Data and Water Demand Forecast
2018 Chapter 3 – System Analysis
2018 Chapter 4 – Conservation, Supply Analysis, Water Rights, System Reliability and Interties
2018 Chapter 5 – Source Water Protection
2018 Chapter 6 – Operation and Maintenance Program
2018 Chapter 7 – Distribution Facilities Design and Construction Standards
2018 Chapter 8 – Capital Plan
2018 Chapter 9 – Financial Summary
2018 Chapter 10 – Implementation
2018 Appendix A – Water Facilities Inventory
2018 Appendix B – History of Moratoriums and Allocations, and Group B Water Systems in Future RWSA
2018 Appendix C – Well Data Sheets, 2008-2016 Water Production
2018 Appendix D – Intertie and Interagency Agreements
2018 Appendix E – Future Water Connection Agreement
2018 Appendix F – Design Standards
2018 Appendix G – District Resolutions (GFCs, LFCs, ULIDs)
2018 Appendix H – Reimbursement Agreement
2018 Appendix I – Developer Extension Agreement
2018 Appendix J – Water Quality Monitoring
2018 Appendix K – Application for Water Service
2018 Appendix L – Cross-Connection Control Program
2018 Appendix M – Hydraulic Model Development and Calibration
2018 Appendix N – Cascade WUE Goal and Reclaimed Water Analysis
2018 Appendix O – Well Susceptibility Forms
2018 Appendix P – Wellhead Protection Area Delineation Update
2018 Appendix Q – Spill Incident Response Plan
2018 Appendix R – Operation and Maintenance Program Details
2018 Appendix S – Water Shortage Response Plan
2018 Appendix T – Financial Summary Appendix
2018 Appendix U – SEPA Checklist
2018 Appendix V – Draft Plan Comments and Responses: Comments must be received by June 11, 2019 and will be posted after that deadline.

SEPA Checklist and DNS for the 2018 Water Comprehensive Plan: SEPA Comments due 3/11/2019

2018 WATER COMPREHENSIVE PLAN
PUBLIC MEETING RECORD

4. Newspaper Display Ad – Issaquah Reporter and Redmond Reporter

   Published March 1, 2019

Water Comprehensive Plan Public Meeting
Monday, March 11 — 6:00pm

The Sammamish Plateau Water Board of Commissioners is holding a Public Meeting to present highlights of its 2018 Water Comprehensive Plan.

The plan considers all aspects of water service delivery, and describes long-term strategies to maintain water quality, meet present and future infrastructure needs, and comply with state and federal regulations.

For more information, and instructions on how to submit comments to the District, visit spwater.org.

Deadline for public comment is June, 11, 2019.

1510 228th Avenue SE, Sammamish WA | (425) 295-3239

2018 WATER COMPREHENSIVE PLAN
PUBLIC MEETING RECORD

5. Newspaper Legal Notice – Seattle Times

Published in newspaper on February 28, 2019
Published on the digital Seattle Times site on February 28, 2019 through March 6, 2019

The Seattle Times

Sammamish Plateau Water Dist

1510 228th Ave SE

Sammamish, WA 98075

Re: Advertiser Account # 102401

Ad #: 870916

Agency Account #: 0

Agency Name:

Affidavit of Publication

STATE OF WASHINGTON
Counties of King and Snohomish

The undersigned, on oath states that he/she is an authorized representative of The Seattle Times Company, publisher of The Seattle Times of general circulation published daily in King and Snohomish Counties, State of Washington. The Seattle Times has been approved as a legal newspaper by others of the Superior Court of King and Snohomish Counties.

The notice, in the exact form annexed, was published in the regular and entire issue of said paper or papers and distributed to its subscribers during all of the said period.

Newspaper and Publication Date(s)	
Seattle Times	02/28/19

Agent Sharon Seligman Signature Sharon Seligman

Subscribed and sworn to before me on 02/28/19
DATE

Debbie Collantes
Debbie Collantes

(Notary Signature) Notary Public in and for the State of Washington, residing at Seattle

The Seattle Times

Re: Advertiser Account # 102401

Ad #: 870916

Agency Account #: 0

Agency Name:

AD TEXT

SAMMAMISH PLATEAU WATER AND SEWER DISTRICT
PUBLIC MEETING NOTICE
March 11, 2019
District Office
1510 228th Avenue SE
Sammamish, WA 98075

Notice is hereby given by the Board of Commissioners of Sammamish Plateau Water and Sewer District that a Public Meeting will be held on Monday March 11, 2019 at 6:00 PM, at the District office, 1510 228th Avenue SE, Sammamish, WA 98075. The purpose of the Public Meeting is to present the 2018 Water Comprehensive Plan to the public.

Mary Shustov
Secretary, Board of Commissioners

The Seattle Times

-Notice Details-

These are the details of your notice scheduled to run on the dates indicated below.

Prepayment Information

Date	Method	Card Type	Last 4 Digits	Check #	Amount

Account Information

Account #:	102401
Advertiser Name:	Sammamish Plateau Water Dist
Agency Name:	
Contact:	
Address:	1510 228th Ave SE Sammamish, WA 98075
Telephone:	(425) 392-6256

Run Date(s)

Seattle Times	02/28/19
NWclassifieds	02/28/19
NWclassifieds	03/01/19
NWclassifieds	03/02/19
NWclassifieds	03/03/19
NWclassifieds	03/04/19
NWclassifieds	03/05/19
NWclassifieds	03/06/19

Notice Placement Information

Notice ID:	870916
Purchase Order #:	Public meeting
# of lines:	21
Total NET Cost:	$46.83
Class Name:	Public Notices

Legals Desk Contact Information

Phone #	(206) 652-6018
Email:	legals@seattletimes.com

*The ad preview below may not be to actual scale

SAMMAMISH PLATEAU WATER AND SEWER DISTRICT
PUBLIC MEETING NOTICE
March 11, 2019
District Office
1510 228th Avenue SE
Sammamish, WA 98075

Notice is hereby given by the Board of Commissioners of Sammamish Plateau Water and Sewer District that a Public Meeting will be held on Monday March 11, 2019 at 6:00 PM, at the District office, 1510 228th Avenue SE, Sammamish, WA 98075. The purpose of the Public Meeting is to present the 2018 Water Comprehensive Plan to the public.

Mary Shustov
Secretary, Board of Commissioners

2018 WATER COMPREHENSIVE PLAN
PUBLIC MEETING RECORD

6. Public Meeting Sign-in Sheet

SAMMAMISH PLATEAU WATER AND SEWER DISTRICT

2018 WATER COMPREHENSIVE PLAN PUBLIC MEETING – March 11, 2019

PLEASE PRINT LEGIBLY

NAME	MAILING ADDRESS	E-MAIL ADDRESS
MARY WICTOR	408 208th Ave NE 98074	Wictormary@gmail.com 425-283-7253

NOTICE: Pursuant to the Washington Public Disclosure Act, this form constitutes a public record and is subject to public release.

2018 WATER COMPREHENSIVE PLAN
PUBLIC MEETING RECORD

7. Public Meeting Executive Summary Handout

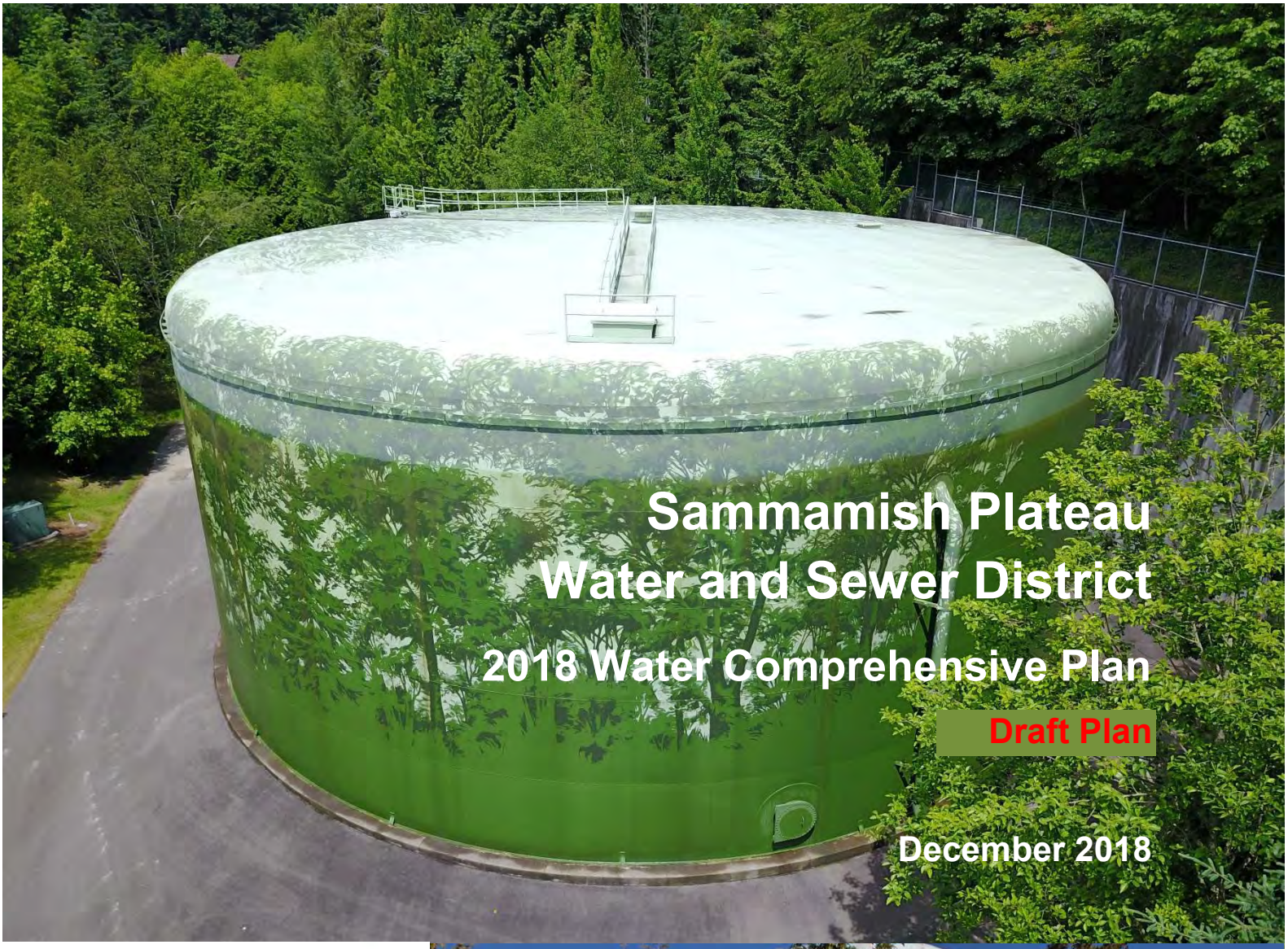

Sammamish Plateau Water and Sewer District

2018 Water Comprehensive Plan

Draft Plan

December 2018

CHS ENGINEERS

Sammamish Plateau Water and Sewer District
Water Comprehensive Plan

Executive Summary

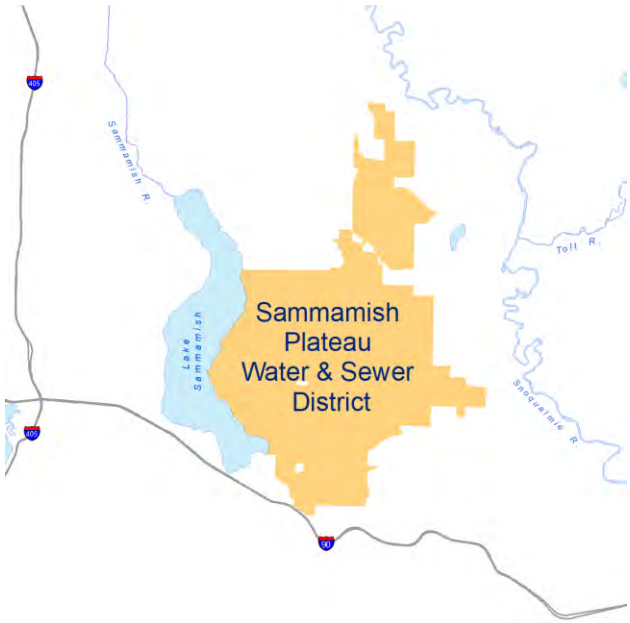

The Sammamish Plateau Water and Sewer District (District) has prepared this Water Comprehensive Plan (Plan) as a road map to guide the District into the future and ensure that it continues to provide high-quality water service to the customers in its water service area. The Plan has been prepared in accordance with the Washington State Department of Health regulations as presented in WAC 246-290-100.

The District, governed by a five-person Board of Commissioners, has been supplying drinking water to its customers on the Sammamish Plateau since 1948. The District's water service area is composed of two distinct areas, designated as the Plateau Zone and the Cascade View Zone. The system includes a total of 12 wells, two connections to the Cascade Water Alliance's regional supply, eight storage tanks, and more than 295 miles of transmission and distribution pipelines, and currently serves more than 60,000 people. The District's service area boundary has evolved as a function of growth and reflects hydraulic and topographical constraints. It is not coincident with political boundaries.

There have been several changes from the federal to the local level regulations since the District's last Water Comprehensive Plan was prepared in 2010 (with an amendment in 2012) that impact the comprehensive planning process. The District has completed several programmatic initiatives in support of actively improving its management, planning, customer service and operations missions. Notable changes and new programs and achievements are highlighted in the following sections and detailed in the following chapters.

Two particularly notable advances include the implementation of Advanced Metering Infrastructure, discussed further under Water Use Efficiency, and development and adoption of an Asset Management Plan, discussed further under Capital Plan.

Policies

In accordance with the guidance provided in the Growth Management Act, this Plan is designed to be consistent with other applicable City and County plans. The District has policies that outline its approach to provision of service within its Retail Service Area, consistent with “duty- to-serve” requirements established by the State. The District’s service area boundary is independent of political boundaries.

Since adoption of the last Plan, the District has modified its policies for meter requirements for certain public-institutional developments. In addition policies were changed to allow new Group B systems in areas of the District’s future service area where direct District service is not readily available. This would be particularly applicable outside of the Retail Service Area.

The Board also adopted a formal Drinking Water Quality Policy statement addressing drinking water standards and groundwater and aquifer protection.

Demand Forecast

A primary element of developing an effective water system plan is the ability to forecast future demands on the system. The District is not a land use agency, and therefore must plan to meet the water demands that will result from land use and zoning designations established by King County and the Cities of Issaquah and Sammamish. Long-term (20-year and buildout) forecasts were prepared using District data, zoning designations, current development activity, population and housing unit growth projections developed by the PSRC and estimated future water conservation savings.

Recent updates used in this Plan include the 2015 update of the Puget Sound Regional Council (PSRC) long-range population and housing growth forecast for the region, the 2015 update to the City of Sammamish Comprehensive Plan, and the 2017 City of Issaquah update to its Comprehensive Plan. The updated growth forecasts have been prepared following a significant recession and reset the long-range growth forecast.

Average day water demands in the District's service area are projected to reach 5.99 million gallons per day (mgd) by 2027, and 6.1 mgd by 2037. Maximum day demand is forecast to reach 12.7 mgd by 2027 and 13.0 mgd by 2037.

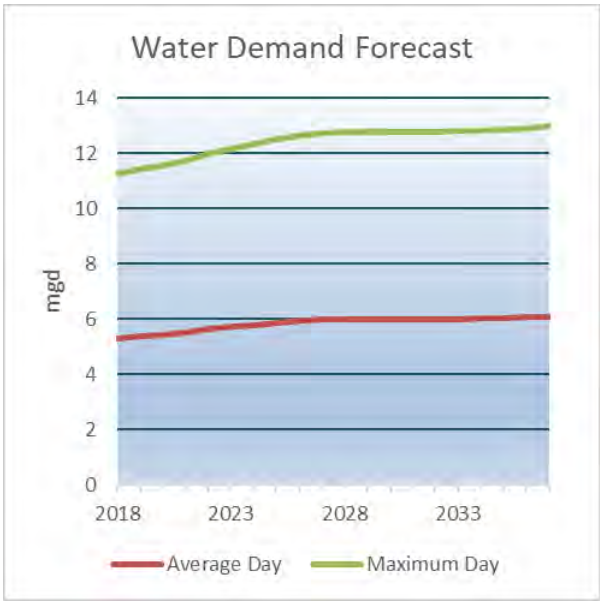

As evident in the growth trend line, PSRC growth forecasts anticipate a period of very slow population and housing growth beginning in about 10 years, with increasing growth rates late in the 20-year planning period. However, since several variables influence growth and water use, the population and water demand forecasts will be periodically reassessed by the District.

Transmission, Distribution, and Storage Analyses

Transmission, distribution, and storage analyses were conducted through the development of an extensive hydraulic model and supporting calculations of capacity versus forecast demand. In 2016 the District completed a project to comprehensively update and calibrate the distribution system hydraulic model. The update included inputs from the District's geographic information system (GIS) asset inventory, updated pump curves, well production data and customer consumption from billing records. Preliminary model results were compared to data collected during field tests conducted in June, July and October 2016. Forty-five locations were used for field data collection. Field testing focused on measurement of static pressure, time and date at a hydrant followed by opening a nearby hydrant for testing under demand conditions. The model was then calibrated to achieve a high level of accuracy for nearly all conditions.

The hydraulic model evaluated current and future water requirements, analyzed present facilities, and anticipated the impact of future demand increases. The analysis indicated that existing source and storage facilities are sufficient to meet needs through the 20-year planning period (i.e. to 2037).

While most of the District's transmission and distribution systems are adequate, projects were identified for some areas, including increases in size or enhancement with looping to meet fire flow requirements and for provision of service to all portions of the District's service area.

In addition to system requirements for normal operations, the District also completed a redundancy analysis to identify the criticality of system facilities, and identified solutions to improve the overall redundancy of the system. Additionally, a Seismic Vulnerability

Assessment Report, completed in 2014, and a follow-up 2017 Seismic Pipeline Study recommended an additional project to enhance the District's system resiliency.

Water Use Efficiency

The District understands how important it is to conserve water and to make the best use of water resources. In 2013 the Cascade Water Alliance (CWA) adopted a Water Use Efficiency (WUE) program for the period 2014-2019 on behalf of its members. This included an aggregated goal for its seven members of a "…cumulative drinking water savings of 0.6 million gallons per day on an annual basis, and 1.0 million gallons per day on a peak season (June-September) basis by 2020." Conservation within the District's system will be achieved by implementation of activities provided by CWA and additional measures administered directly by the District. Presently planned efforts are forecast to reduce District water use forecast for year 2037 by 0.26 mgd or 4.3 percent for the average day and 0.5 mgd or 3.8 percent for the maximum day.

Service meters are an essential component of conservation programs as they provide feedback to customers on their water use, and provide the basis for financial incentives for individual customers. Starting in 2016 the District significantly improved the potential for customers to monitor and manage their water consumption with implementation of an Advanced Metering Infrastructure (AMI) system. The District continues to identify ways to utilize the additional information available for the District and for each customer. The additional detail available, rather than water use readings bimonthly, will support future planning efforts, water use efficiency evaluations and programs, hydraulic modeling, and timelier leak detection for customers.

Water Resources

The District's intends to continue using its existing groundwater wells as the primary source of supply into the future. These sources are supplemented by water obtained from two connections to the CWA regional supply.

The District has a long-term interest to develop aquifer storage and recovery (ASR) as an element of its water supply strategy, The District's efforts to secure permits to implement ASR have stalled due to reluctance by the State Department of Ecology (DOE) to issue the necessary approvals and recovery rights, in context of comments by third-parties and the very complex analysis desired to address all stakeholders' concerns and interests.

Water quality in the aquifer continues to be an area where the District must be vigilant. The District successfully worked with the City of Issaquah to avoid risk of contamination of District groundwater supply in the Issaquah Valley aquifer near the District's Well 9. The District provided funding to allow the City to abandon the Lower Reid Infiltration Gallery in 2014 and manage the stormwater discharge in an area outside a wellhead protection area. More recently, detection of minute amounts of per- and polyfuorinated

substances (PFASs), well below the US EPA Health Advisory Limits, in two wells and uncertainty over changes in level of contamination and further development of the understanding of health impacts and potential regulations has prompted more specific review of use of those wells for supply. To assist in the understanding of this situation, the District updated its Issaquah Valley groundwater model in 2016. The District then developed a monitoring and response plan. Alternatives to address this new constraint include addition of treatment, if necessary, and/or increased reliance on the regional water supply system.

Water Operations Regulatory Requirements

The District's water supply and monitoring programs comply with current drinking water regulations. The District has complied with new regulations since the last Plan, and continually looks to the future to anticipate upcoming regulations and how they might affect the utility and its operations, and most importantly, the quality of water provided to its customers. New and updated District programs include the following.

- The Revised Total Coliform Rule/Distribution System Rule took effect in 2016. The revised rule placed increased emphasis on evaluation of water samples for presence of total coliform, fecal coliform and *E. coli*, and consideration of how to respond following detection of the presence of each. In 2017 the District updated its Coliform Monitoring Plan and developed the associated Triggered Groundwater Monitoring Plan. The Coliform Monitoring Plan includes two tiers of assessment in response to potential unsatisfactory quality results, and an *E. coli* response plan.

- The District collected the required Unregulated Contaminant Monitoring Rule 3 (UCMR3) data from 2013 to 2015. As part of the UCMR 3 monitoring program the District detected PFASs in the supply from District Wells 7 and 8 in 2015. Minute quantities of the contaminants were detected below the survey's minimum reporting level and well below the health advisory level. The City of Issaquah detected these compounds at levels above the health advisory levels in their wells about 1,600 feet away from District wells 7 and 8. The presence of this class of contaminants in the District's water supply has prompted more detailed evaluation and consideration of measures to assure delivery of a safe water supply. Emergence of PFASs as contaminants of concern, including refinement of the health advisory impacts indicates there is potential for associated future water quality regulations.

- In 2017 the fourth Unregulated Contaminants Monitoring Rule (UCMR 4) identified 30 additional chemical and biological contaminant parameters to be included in the District's water quality monitoring program. The District will conduct that monitoring beginning in 2019. There is anticipated continued participation in the UCMR monitoring program including phases anticipated beyond UCMR 4.

- The City of Flint changed its source of water supply and, with insufficient treatment, lead leached from lead water pipes into the local drinking water supply. This exposed

customers to lead contamination. EPA is considering long-term revisions to the federal Lead and Copper Rule, with a final rule anticipated in 2020. The District also anticipates designation of a national primary drinking water regulation for Perchlorate in the near future.

Capital Plan

Starting in 2016, the District established the practice of preparing a biennial Capital Plan, as a programmatic approach for near-term implementation of capital improvement projects, in the context of operational needs, the most recent Water Comprehensive Plan and Wastewater Comprehensive Plan, collaboration opportunities with local governments, development and system extension activity and the Asset Management (AM) Plan.

Also in 2016, through an intensive effort by all District staff and management, with support of the Commissioners, the District developed an AM Plan for its water and sewer system assets. The AM Plan addresses:

- The current state or condition of the District's assets.
- Asset performance needed to deliver our desired level of service.
- Which assets are critical to sustained performance and service delivery.
- The minimum life-cycle costs for the assets relied on to provide service.
- The best long-term funding strategy to operate and renew assets.

The AM Plan identified 45,000 water system assets with a then-current replacement value estimated to be $584 million. Eighty-nine percent of the water system assets were determined to be in "good" to "very good" condition. This is due to the District's historic and ongoing efforts to maintain the system and due to the relatively young age of many of the assets. The findings of the AM Plan support long-range financial planning for maintenance and eventual replacement of assets as they reach the end of their life cycle. Prudent planning for future needs will avoid the need for significant unforeseen increases in rates and connection charges.

The current biennial District Capital Plan was completed for 2018-2019, with consideration of projects through 2023. That plan was a significant resource for identification of projects for the early years of the 10-year capital plan presented in this Plan. The Plan contains the District's Capital Plan (CP) that has been developed to guide the growth of the utility's water system through the year 2037 and beyond. Included in the ten-year CP are:

- Water system share of combined water and sewer system general projects (e.g. office and administration facilities and programs, shared equipment, etc.)
- General water system projects or programs (e.g. completion of AMI project, Smart Water programs, vehicles and equipment, studies, etc.)
- Water supply and treatment improvement projects
- Booster pump station upgrade projects

- Storage safety and coating improvements, and a booster pump station project to utilize more existing capacity
- Transmission main upgrades or extensions
- Fire flow improvements in the transmission and distribution system
- Redundancy piping and pressure reducing valve projects

The CP also includes identification of several projects in progress.

Capital Plan Summary (Ten-Year)

Description	**2018 to 2027**
Water Share of Combined Projects	$3,146,905
General Water System	$2,382,143
Supply	$5,833,000
Booster Pumping	$41,781
Storage	$9,656,386
Mains – Transmission and General	$3,875,175
Mains – Fire Flow Deficiency	$7,027,320
Mains - Redundancy	$13,882,620
Mains – Projects in Progress	$10,962,230
Total	**$56,807,560**

Financial Evaluation

The District is in excellent financial health, and the financial plan presented herein verifies that the District can continue meeting all financial requirements. Revenue adjustments will be necessary to fund capital improvement projects outlined in the CP. Through this planning process the District has determined that the District's Water General Facility Charges (GFCs) are adequate to recover an equitable share of system costs from growth. The financial plan review is based on assumptions that may change over time. The District reviews financial needs as part of an annual budget process, with annual rate analyses that provide the basis for actual revenue adjustments.

2018 WATER COMPREHENSIVE PLAN
PUBLIC MEETING RECORD

8. Public Meeting Presentation Outline

The presentation was provided in a Storymap format.

The attached is an outline used to guide the presentation.

2018 Water Comprehensive Plan

Send keyboard focus to media

2018 WATER COMPREHENSIVE PLAN

- A Guide
- Reference
- Required

Our Mission Statement

Sammamish Plateau Water will provide safe, efficient, and reliable water and sewer services by being a leader in the planning and the practice of fiscal and environmental stewardship.

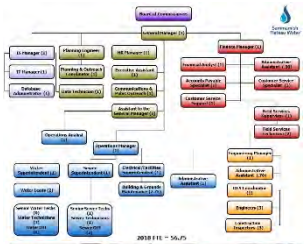

Management and Personnel

The 5 Board of Commissioners are elected by voters who reside within the District's corporate limits. The Board is responsible for setting District policy, and hiring the General Manager to run the District.

The District is structured into 5 Departments

- **Administration Department**: **L**ed by the General Manager
- **Information Services Department**: Provides all District departments with technology sup Geographical Information Services (GIS)

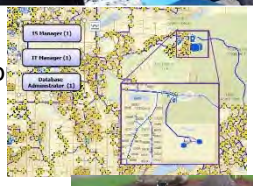

- **Customer Service and Finance**: Responsible for customer service including inquiry response billing, cross-connection program, and all District accounting functions.

- **Engineering**: Develops and reviews designs, and inspects infrastructure improvements.

- **Operations**: Responsible for management of the water, sewer systems and other District facilitie

The District

Send keyboard focus to media

Current service area covers 29 Square Miles.
Separated into the Plateau Zone and the Cascade View Zone, separated by SR 202.

The District started as 3 separate Districts.

- Water District 82 in 1948 - near Pine Lake
- Water District 121 in 1967 - near Beaver Lake
- Water District 122 in 1967 - north of SR 202

The boundary of the District evolved over time, and continues to expand through annexations. **Growth** has accompanied these expansions as well.

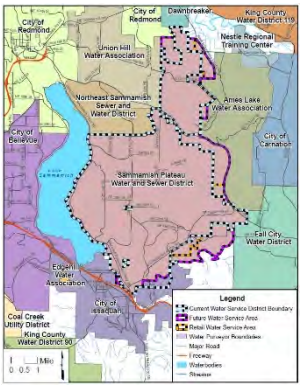

The District is part of the East King County Coordinated Water Supply Plan, which plays a part in setting boundaries between **adjacent water purveyors**.

- The Future Service Area boundary is set through the Coordinated Water Supply Plan
- The Existing District boundary is the Corporate Boundary, set through Annexations. **Additional Annexations** will eventually expand the boundary to match the Future Service Area.

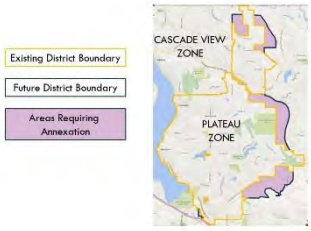

- The **Retail Service Area** represents areas that can obtain water service from the District using standard main extension methods in less than 3 years

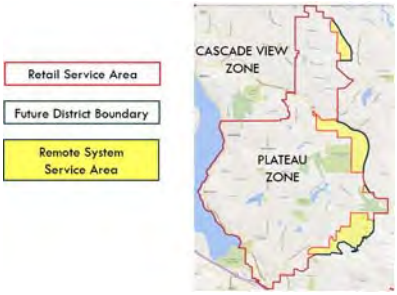

Service Policies - Getting the Water to you

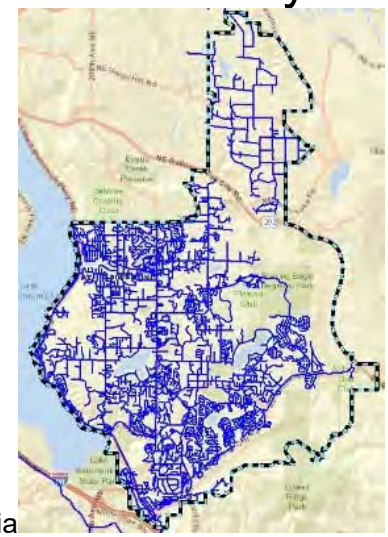

Send keyboard focus to media

Determine Whether Water Service is **Available**

- Existing Water Main at the Property
- Existing Water Main near the property access
- New Water Main Required

Existing Main

- Direct Connection

Non-Adjacent Existing Main

- Non-Standard Service Line

New Main

- Developer Extension
- Utility Local Improvement District
- Capital Improvement Project

If Water Service is Not Readily Available

- Remote System - Private Ownership
  - Private Well
  - Class B System: Certified Operator+Metered
- Agreement for Future Connection to the District

Service Policies - Requirements for Connection

Send keyboard focus to media

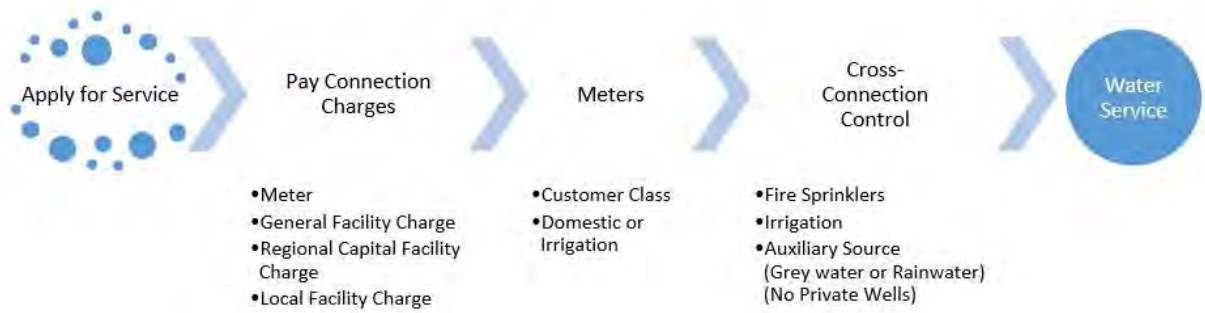

Conditions of Service include:

- Written Application by the Property Owner
- Payment of Connection Charges
  - o Meter size based
  - o Property based
-
- **All use is Metered**

Meter Requirements

Meter Requirements	Domestic Use	Fire Flow	Irrigation
Single-Family	Minimum 1 per property Maximum 1 per structure	May use Domestic Meter If >1" separate fire meter may be required	May use Domestic Meter Separate Meter Allowed
Multi-Family	1 per structure Or 1 per Unit Allowed	Separate Meter Required if per Structure & >1-inch May use Domestic Meter if Per Unit Domestic meter	Separate Meter Required
Commercial/Industrial	1 per structure	Separate Meter Required	Separate Meter Required
Mixed Use	1 per use type per structure	Separate Meter Required	Separate Meter Required
Public-Institutional	Minimum 1 per property Maximum 1 per structure	Separate Meter Required	Separate Meter Required

Minimum Meter Size set by Plumbing Code
Backflow Prevention as required per Cross-Connection Program

- Pressure Control (Property Owner's Responsibility)
- Easements may be required for existing or future mains
- Auxiliary Water Supply limitations
  - o No Private Well Connection Allowed
  - o Grey water and Rainwater Systems must have
    - ▪ Air Gap
    - ▪ Backflow Prevention
    - ▪ Metered (if it flows to sewer)

Planning - Understanding your Existing Customers

Send keyboard focus to media

Utilize information about existing customers to help predict future demands.

Customer Classifications

- Residential
  - Single and Multi-Family
- Non-Residential
  - Commercial, Industrial, Public-Institutional (Government) and Irrigation

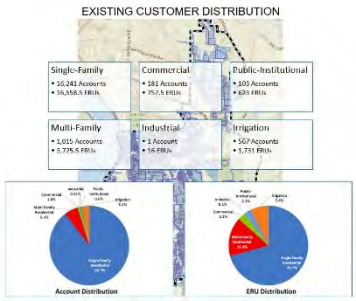

Distribution of Customers in each Customer Class

Equate the different Customer Classes to each other

Equivalent Residential Units (ERUs) and Meter Size

Meter Size (inches)	3/4	1	1-1/2	2	3	4	6	8	10
Number of ERUs	1	2.5	5	8	16	25	50	80	115

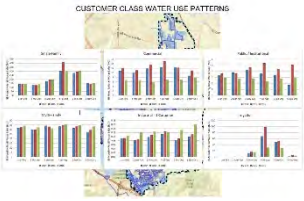

Look at the **Water Use Patterns** for each Customer Class

Calculate an Average Day Demand **Water Use Factor** for each Customer Class (Average for 2014-2016 Use).
Non-Residential Classes are combined for use with demand forecast.

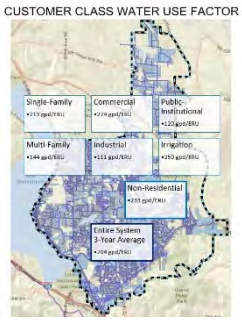

The previously described Customer Classes make up the District's Retail Customers. There is also authorized water use by others collectively referred to as **Other Consumption**, which includes:

- Hydrant use, both metered and honor reported
- Flushing and Jetting activities
- Firefighting reported water
- Other non-revenue authorized use

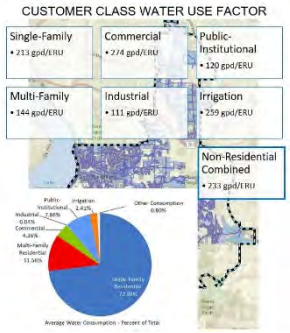

Other Consumption does not have a Water Use Factor,
Projections assume the highest use measured in the past 3 years (2014-2016)
2015 = 0.04 Million Gallons per Day (MGD).

Planning - Historical Water Production Vs Consumption

Send keyboard focus to media

Production and Consumption over 3 years (2014-2016) are used to develop factors to use in the future water demand forecast.

One Factor

- **Distribution System Leakage** (DSL)

  Total Production - (Retail + Other Consumption)

  as a percentage of Total Production : 6.33 % used

  Other Factors used for projections

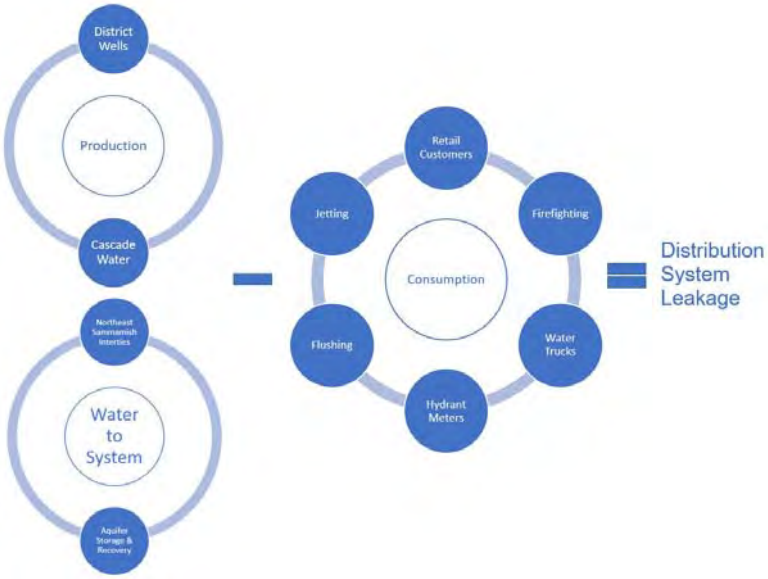

- Average Day Demand (ADD)

  (Water Use Factor x Projected ERUs) + DSL

  Average Water Use Factor per ERU for the District = 204

- MDD:ADD Factor

$$\frac{\text{Maximum Day Production}}{\text{Retail + Other Consumption}} = 2.20$$

- Maximum Daily Demand (MDD)

  (ADD - DSL) x MDD:ADD Factor

- Peak Hourly Demand (PHD)

  ((MDD per ERU / 1440) x (C x N + F)) + 18

  N = ERUs, C = 1.6, F = 225

- PHD Ratio

  PHD / MDD

Water Use Factors

Planning - Demand Forecast

Send keyboard focus to media

CUSTOMER FORECAST:

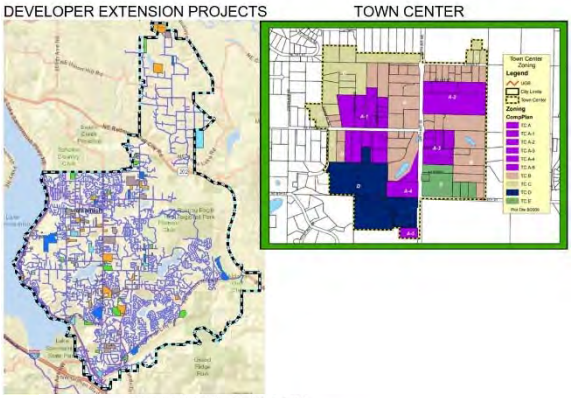

- Existing Customers
  - o District records
- **Near Term Expected Growth**
  - o Developer Extension Agreements
  - o Town Center
- Longer Term Expected Growth
  - o Census Information
  - o Puget Sound Regional Council Growth Rates
  - o **People Per Household Changes over time**
- Buildout
  - o **Zoning** (current zoning is used)
  - o Maximum allowed by zoning is then modified to consider existing use and critical areas

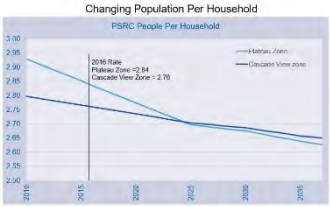

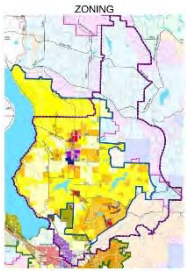

CUSTOMER GROWTH METHODOLOGY

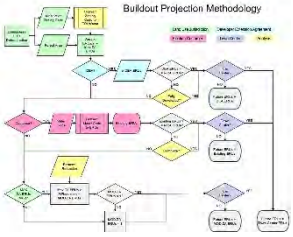

- All areas of "Analysis" have some subjectivity
- **ERU Forecast** is completed:
  - o by Customer Class
  - o within each Jurisdiction

Summary of ERU Forecast by Jurisdiction (2017 - Buildout)

Land Use Jurisdiction	2017	2018	2019	2020	2021	2022	2023	2024	2025	2026	2027	2032	2037	Build out
Plateau Zone														
City of Sammamish	19,403	19,803	20,120	20,350	20,884	20,697	21,283	21,586	21,889	22,091	22,293	22,293	22,553	26,762
City of Issaquah	3,164	3,281	3,303	3,303	3,303	3,495	3,534	3,574	3,609	3,615	3,621	3,668	3,785	4,691
King County	372	430	430	451	451	451	455	460	465	467	470	482	496	1,374
Subtotal	22,938	23,514	23,852	24,104	24,437	24,943	25,272	25,620	25,962	26,173	26,384	26,443	26,835	32,826
Cascade View Zone														
King County	788	792	803	804	805	805	816	828	837	839	841	850	882	1,103
Total System	23,726	24,306	24,655	24,908	25,242	25,748	26,088	26,448	26,800	27,012	27,225	27,296	27,717	33,929

WATER DEMAND FORECAST

- Separately for Plateau Zone & Cascade View Zone and as Total System
- Apply the factors to the ERU Forecast to calculate
  - o **ADD - BY CUST CLASS**
  - o **MDD SUMMARIZED**
  - o PHD

Use the Demand Forecast results to analyze the Water System

	2017	2018	2019	2020	2021	2022	2023	2024	2025	2026	2027	2032	2037
Average Day Demand - ADD													
Plateau Zone	5.09	5.12	5.23	5.26	5.34	5.46	5.54	5.62	5.71	5.78	5.81	5.82	5.91
Cascade View Zone	0.179	0.180	0.183	0.183	0.183	0.183	0.186	0.188	0.191	0.195	0.192	0.195	0.204
Total System - ADD, (MGD)	**5.18**	**5.30**	**5.58**	**5.44**	**5.52**	**5.64**	**5.73**	**5.81**	**5.90**	**5.95**	**6.00**	**6.02**	**6.11**
Maximum Day Demand - MDD													
Plateau Zone	10.6	10.5	11.1	11.2	11.4	11.6	11.8	12.0	12.1	12.2	12.4	12.4	12.6
Cascade View Zone	0.382	0.384	0.389	0.389	0.390	0.390	0.395	0.400	0.405	0.406	0.407	0.413	0.417
Total System - MDD, (MGD)	**11.0**	**11.1**	**11.4**	**11.6**	**11.7**	**12.0**	**12.2**	**12.4**	**12.5**	**12.6**	**12.8**	**12.8**	**13.0**
Peak Hour Demand - PHD													
Plateau Zone	11,530	11,617	11,966	12,111	12,278	12,530	12,694	12,860	13,039	13,144	13,249	13,278	13,474
Cascade View Zone	481	483	489	489	490	490	495	500	506	507	508	515	520
Total System - PHD (gpm)	**12,011**	**12,100**	**12,475**	**12,601**	**12,767**	**13,019**	**13,189**	**13,360**	**13,544**	**13,650**	**13,756**	**13,793**	**14,002**

ANALYSIS

Send keyboard focus to media

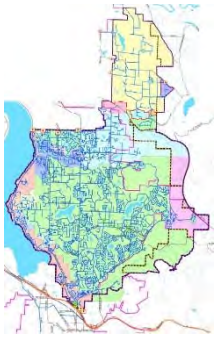

Analysis of the Water System applies water system demands to the District facilities, considering:

- Source
- Storage
- Distribution System

SOURCE ANALYSIS

Send keyboard focus to media

The District source is analyzed for the ability to meet Maximum Day Demand (MDD).

District sources include:

- District Groundwater Wells
- Cascade Water Alliance Regional Surface Water Supply

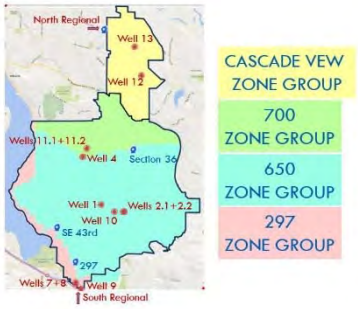

Plateau and Cascade View Zones are analyzed separately.

The Plateau Zone includes analysis of 3 separate zone groups;

- **700 Zone Group –**
- **650 Zone Group**
- **297 Zone Group**

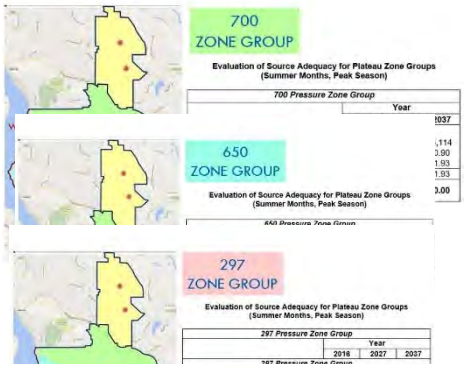

Cascade View is analyzed as one zone.

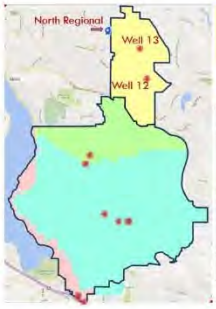

CASCADE VEW ZONE GROUP

Evaluation of Source Adequacy for Cascade View Zone (Summer Months, Peak Season)

	Year		
	2016	2027	2037
Projected ERUs and Demand[1]			
ERUs	784	841	882
Average Day Demand (MGD)	0.18	0.19	0.20
Maximum Day Demand (MGD)	0.38	0.41	0.43
Total Available Source (MGD)	0.66	0.66	0.66
District Source Surplus/(Deficiency) (MGD)	**0.28**	**0.26**	**0.24**
North Regional Connection (Cascade)[3]	0.29	0.29	0.29
Total Source Surplus/(Deficiency) (MGD)	**0.57**	**0.54**	**0.52**

ANALYSIS - STORAGE

Send keyboard focus to media

The District has 22,521,454 gallons of storage.

Storage is considered to have different **components**:

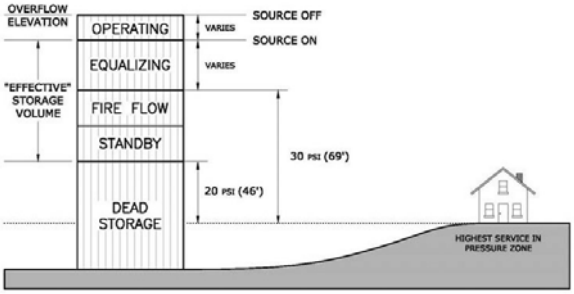

- Operating Volume: *Normal operations range*
- Equalizing Volume: *Moderates normal daily fluctuations, maintains system pressure above 30 psi*
- Fire Flow Volume: *Fire fighting,maintains system pressure above 20 psi*
- Standby Volume: *For system emergencies and outages (Not for major emergencies, such as a large earthquake)*
- Dead Volume: *Cannot be used due to insufficient pressure*

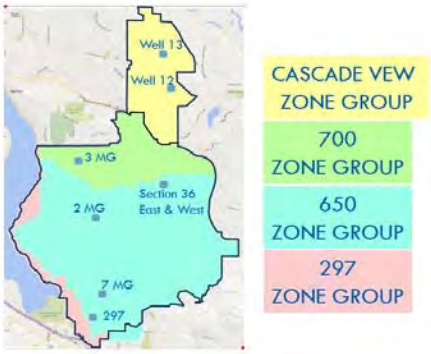

Plateau and Cascade View Zones are analyzed separately.

The Plateau Zone includes analysis of 3 separate zone groups; *Facilities, Tanks, Results*

- **700 Zone Group NOTE NEGATIVE**
- **650 Zone Group**
- **297 Zone Group**

Cascade View is analyzed as one zone.

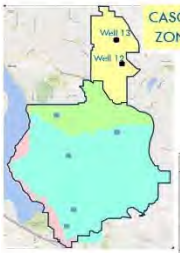

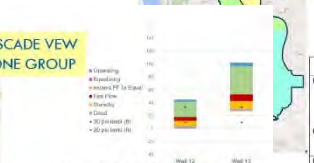

Cascade View Zone Storage Capacity Analysis

	Year		
	2016	2027	2037
Required Storage Calculations			
Operational Storage (MG)[F]	0.06	0.06	0.06
Equalizing Storage (MG)[F]	0.00	0.00	0.00
Standby Storage (MG)[F]	0.16	0.17	0.18
Fire Flow Storage (MG)[F]	0.12	0.12	0.12
Required Storage			
Greater than 30 psi at highest meter (MG)[F]	0.06	0.06	0.06
Greater than 20 psi at highest meter (MG)[TM]	0.28	0.29	0.30
Existing Storage Greater Than 30 psi (MG)			
Total Existing Storage at 30 psi (MG)	0.82	0.82	0.82
Unallocated(Deficiency) at 30 psi (MG)	**0.75**	**0.75**	**0.75**
Existing Storage Between 20 and 30 psi (MG)			
Total Existing Storage at 20 psi (MG)	0.01	0.01	0.01
Unallocated(Deficiency) at 20 psi (MG)	**(0.27)**	**(0.28)**	**(0.29)**
Total Unallocated(Deficiency) at 30 psi (MG)	**0.49**	**0.47**	**0.47**
Net of Deficiency at 20 psi			

Evaluation of Storage Adequacy for 297 Zone

	Year		
	2016	2027	2037
Required Storage Calculations			
Operational Storage (MG)	0.27	0.27	0.27
Equalizing Storage (MG)	0.00	0.00	0.00
Standby Storage (MG)	0.31	0.35	0.37
Fire Flow Storage (MG)	0.96	0.96	0.96
Required Storage			
Greater than 30 psi at highest meter (MG)	0.27	0.27	0.27
Greater than 20 psi at highest meter (MG)	1.27	1.31	1.33
Existing Storage Greater Than 30 psi (MG)			
Total Existing Storage at 30 psi (MG)	1.33	1.33	1.33
Unallocated(Deficiency) at 30 psi (MG)	**1.06**	**1.06**	**1.06**
Existing Storage Greater Than 20 psi (MG)			
Total Existing Storage at 20 psi (MG)	0.84	0.84	0.84
Unallocated(Deficiency) at 20 psi (MG)	**(0.43)**	**(0.47)**	**(0.49)**
Total Unallocated(Deficiency) at 30 psi (MG)	**0.63**	**0.60**	**0.57**
Net of Deficiency at 20 psi			

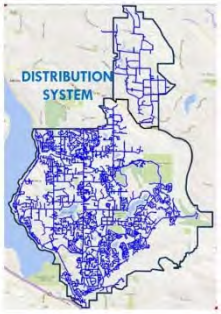

ANALYSIS - DISTRIBUTION SYSTEM

Send keyboard focus to media

The District has over 250 miles of pipelines.

Distribution analysis is completed using a hydraulic model. *Infowater by Innovyze*

The analysis considers

- Peak Hour Demand *minimum of 30 psi in the system*
- Maximum Day Demand + Fire Flow *minimum of 20 psi in the system*
- Velocity constraints *maximum 5 feet per second normally, maximum 8 feet per second during fire flows*

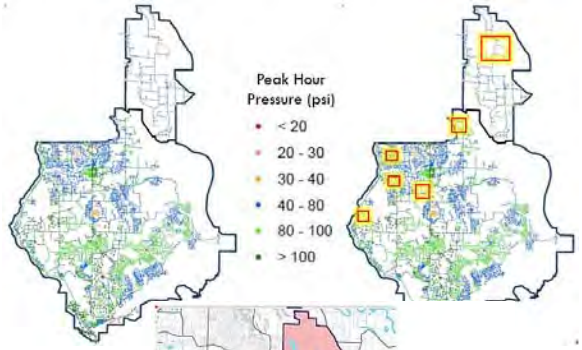

Peak Hour Demand Results

Identified 6 areas with low service pressures

Fire Flow targets are based on zoning:

- 1,000 gpm: Single Family
- 2,500 gpm: Medium Density Multi-Family
- 3,000 gpm: High Density Multi-Family
- 3,000 gpm: Commercial other non-residential uses
- 4,000 gpm: Town Center & Lake Sammamish Center

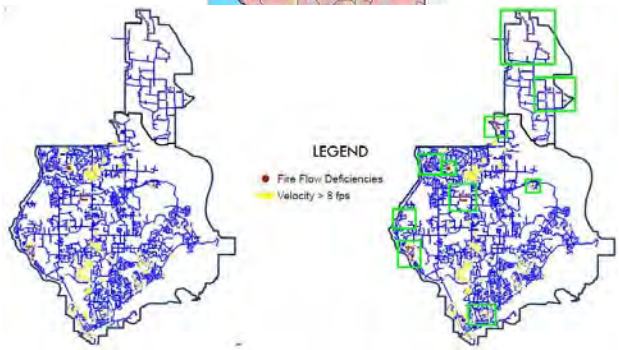

Fire Flow Analysis Results

Identified 10 areas with fire flow issues

Improvements necessary to rectify the pressure and fire flow issues are identified. They include:

- Modifying pressure zone boundaries with additional piping and/or pressure reducing valves
- Increasing water main size
- Looping water mains
- Individual home booster pumps

Pressure and/or Fire Flow Improvement Areas

- **Broadmoore 400 Pressure Zone ← sample**
- 475 Pressure Zone in Inglewood
- 475 Pressure Zone in Tamarack
- Town Center
- 297 Zone at SE 16th/SE 17th
- 550 Pressure Zone near Section 36 Tanks
- Waverly Hills
- Overdale 700 Pressure Zone
- Cascade View Well 13 and North

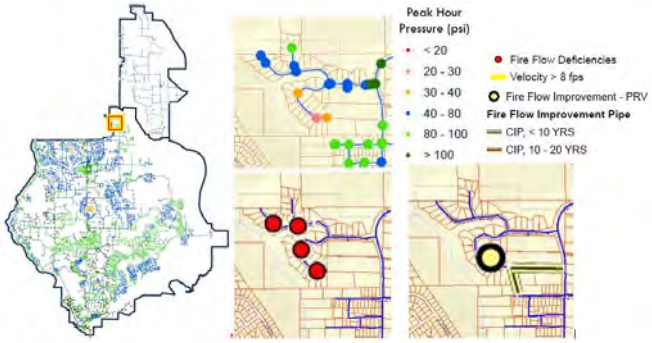

- Cascade View Tracts

Redundancy Analysis

The District also recently conducted a study to identify the criticality of system facilities. The analysis included:

- Pipeline Criticality: Required for adequate system pressure
- Pipeline Isolation: 5 or more valves required to isolate
- Valve Criticality: 6 or more valves required to isolate
- Dead-ends: Identified sole source of supply pipelines to areas with MDD customer demands between 10 and 50 gpm, and > 50 gpm MDD

Results of the hydraulic analyses, redundancy study, a seismic vulnerability assessment, additional potential system loops, and provision of service to un-served and under-served areas are combined to create the basis for **future distribution improvements**.

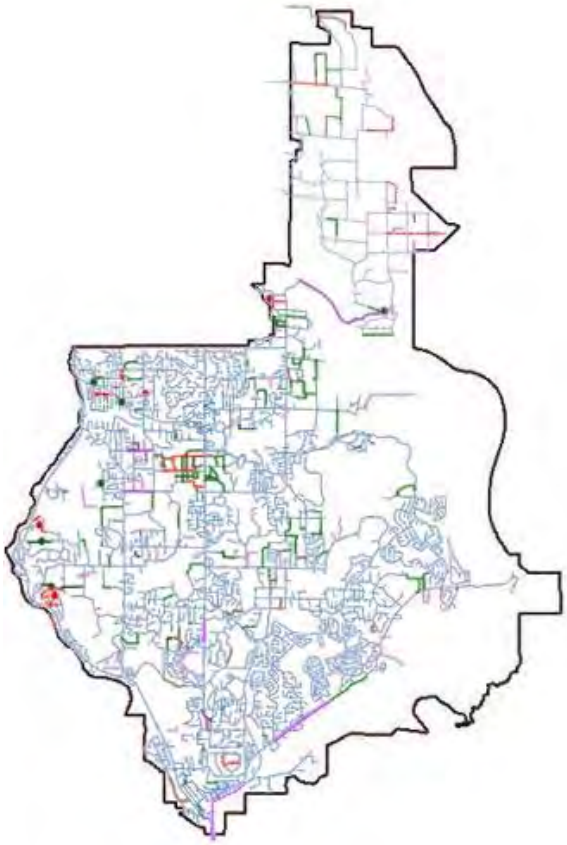

Conservation Program

Send keyboard focus to media

District participates in Conservation programs provided through the Cascade Water Alliance, and also implements stand alone District programs.

The Water Use Efficiency (WUE) Rule requires that a conservation goal be set. While the District previously set its own goal, in 2013, Cascade Water Alliance adopted a 2014-2019 goal on behalf of its members.

Cascade Water Alliance will dedicate resources necessary to achieve a cumulative drinking water savings of 0.6 million gallons per day on an annual basis, and 1.0 million gallons per day on a peak season (June-September) basis by 2020.

Cascade will be updating the goal this year, for the next 6-year period.

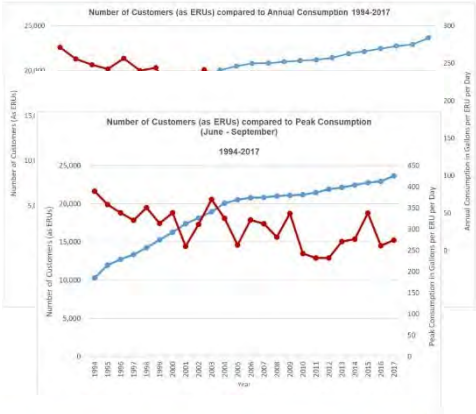

The District has had an official Conservation Program since 1994. The effectiveness can be seen by comparing:

- **Annual Consumption** per Customer
- **Peak Season Consumption** per Customer

The conservation programs are **grouped** as Behavioral, Hardware or Operational.

Conservation efforts can also be compared between **Annual or Peak Season**

- Customer Type (Sector)
- Indoor vs Outdoor Use
- Hardware vs Behavior

The District has **two programs** that are worth noting for their water conservation potential.

- Irrigation Audit Rate Program
- Automated Metering Infrastructure

SUPPLY STRATEGY

Send keyboard focus to media

The District's supply strategy includes multiple elements that provide reliability in meeting demands.

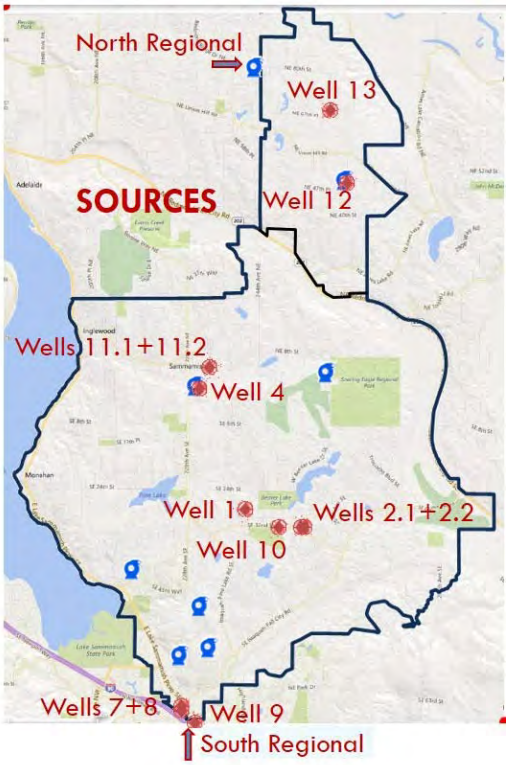

- Groundwater Supplies *12 District wells - Approximately 80% of Supply*
- Aquifer Water Level Monitoring Program
  Over 25 years of monitoring records
  37 wells and 5 surface water locations
- Aquifer Storage and Recovery Potential
  10 years of operational testing, Waiting for full program extension, including recoverable quantities
- Regional (Cascade Water Alliance) Supplies *2 Connections*
- Conservation
  1994 Annual Average Consumption = 271 gpd/ERU
  2017 Peak Season Consumption = 274 gpd/ERU
- Reclaimed Water *Not viable for the District at this time*

WATER RIGHTS EVALUATION

Each District well has associated water rights

- Qi = Instantaneous Water Right
  The maximum flow rate allowed for each well
- Qa = Annual Water Right
  The maximum annual volume allowed to be withdrawn

The District varies the use of individual wells throughout the year and over time. Factors that influence these choices include:

- Customer Water Demand - Seasonal Variations
- Water Rights
- Aquifer Water Levels
- Individual Well Water Quality
- Regional Water Supply Use - Take or Pay Quantity

SOURCE WATER PROTECTION

Send keyboard focus to media

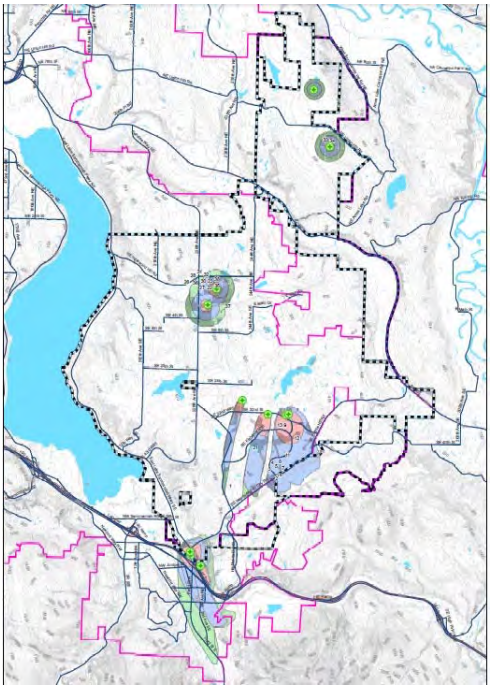

The District maintains protection of its groundwater source water quality through implementation of a robust wellhead protection program and actively engages in understanding and reducing potential risks of degradation to its source water quality.

Protection of the District's groundwater sources series of steps:

- Susceptibility Assessment
- Wellhead Protection Areas
- Contaminant Source Inventory
- Investigating and Managing Threats to Source Water Quality Degradation

Wellhead Protection Areas (WHPA) have been developed for all District wells.

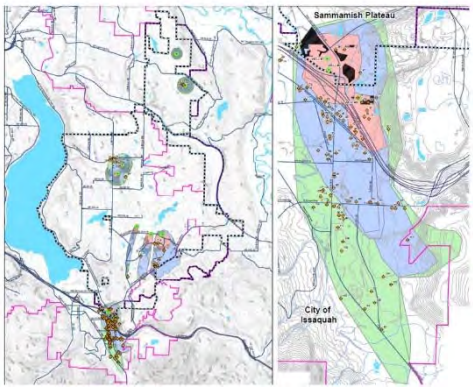

- 1995 - Issaquah Valley Aquifer Wells
- 1998 - Plateau Aquifer Wells
- 1998 - Cascade View Zone Wells
- 2017 - Update Issaquah Valley Aquifer Wells

Contaminant Source Inventory Development

119 sites identified

- Department of Ecology's Facility/Site Identification System (F/SID)
  - State Cleanup Sites
  - Federal Superfund Sites
  - Hazardous Waste Generators
  - Solid Waste Facilities
  - Underground Storage Tanks
  - Enforcement Locations
- Underground Injection Control (UIC) database
- Field reconnaissance (Windshield Survey)
- Contacting owners of identified properties to inform them of their property location in a WHPA, and educate them on how their activities and actions could impact groundwater quality

Current Water Quality Threat Investigation for Per- and Polyfluorinated (PFAS) Compound Plume

- PFAS Plume discovered in Issaquah Valley in 2015
- Developed numerical model to understand fate/transport of plume in 2016-2017
- Monitoring situation through sampling of District production wells, monitoring wells, and surface water locations
- Sharing information with City of Issaquah and Eastside Fire & Rescue

In response the District has obtained temporary water right changes and modified the short term water supply strategy.

A Sand Aquifer Simulated PFOS Contours, Present Day

- Values shown are maximum observed PFOS groundwater concentrations in A Sand wells (ppt)
- Simulated contours are PFOS with a 2,200 ppt source in place at MW-6
- 1 – 10 ppt
- 10 – 100 ppt
- 100 – 500 ppt
- 500 – 1,000 ppt
- > 1,000 ppt

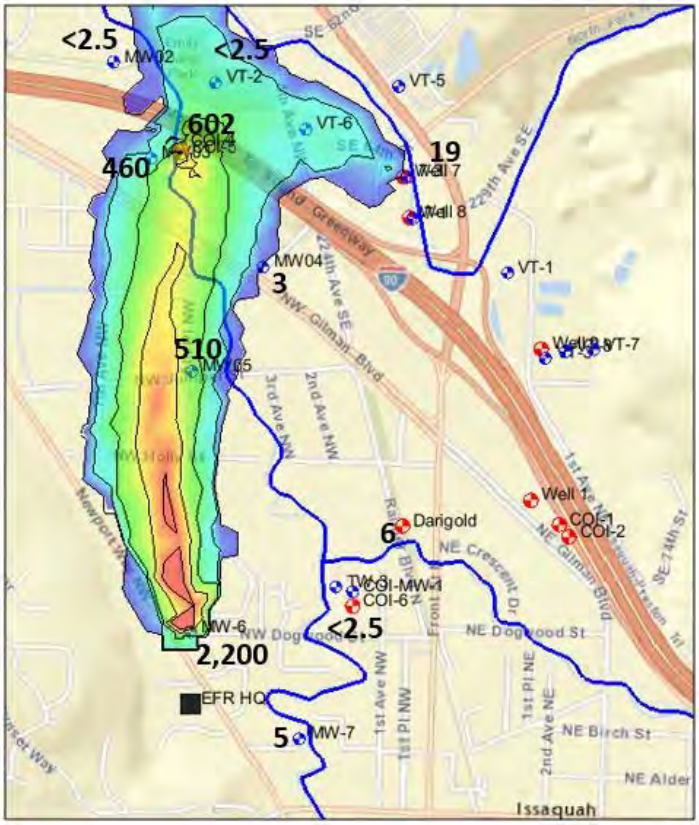

OPERATION AND MAINTENANCE PROGRAM

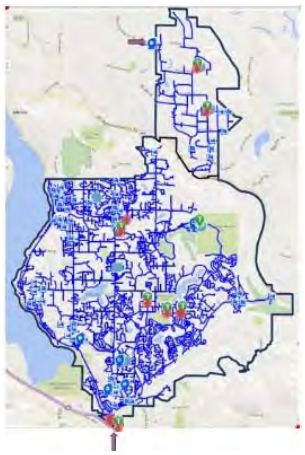

Send keyboard focus to media

DISTRICT FACILITY MAINTENANCE

Operation and Maintenance Program is the engine that keeps the District running.

The department is responsible for managing all District facilities.

- **12 Groundwater Wells**
- 2 Regional Supply Connections
- 8 Storage Tanks
- 8 Treatment Facilities
  - Corrosion Control
  - Manganese Control
  - Fluoridation
  - Chlorination
- **Water Mains**
  - > 250 miles
  - 2-inch to 30-inch diameter
- 47 Pressure Reducing Stations
- 8 Booster Pump Stations

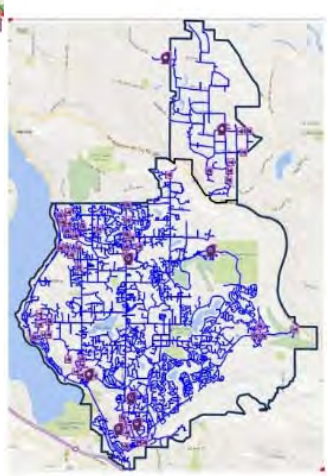

Standard Operating Procedures are utilized to guide operations including work load management

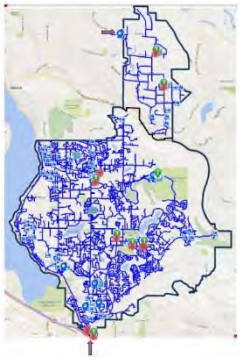

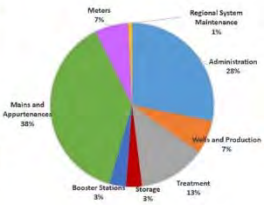

REGULATORY REQUIREMENTS

Source and Treatment Regulations

- Regional Supply Monitoring
  - Surface Water Treatment Rule - 1990
  - Interim Enhanced Rule - 2002
  - Long Term 2 Enhanced Rule - 2006
- District Wells
  - Groundwater Rule - 2009
- Volatile Organic Compounds (VOC), Synthetic Organic Compounds (SOC), & Inorganic Compounds (IOC)
  - Phase I Regulations - 1989
  - Phase II Regulations - 1992
  - Phase IIB Regulations - 1993
  - Phase V Regulations - 1994
  - Radionuclides Rule - 2003
  - Arsenic Rule - 2006
- Unregulated Contaminant Monitoring Rules
  - UCMR - 2001-2005
  - UCMR 2 - 2007-2011
  - UCMR 3 - 2012-2016 *Identified PFAS*
  - UCMR 4 - 2017-2021

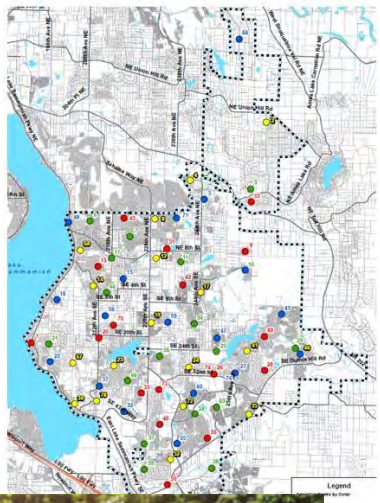

Distribution System Regulations

- **Total and Fecal Coliform – Bacteriological Monitoring**
  - Total Coliform Rule - 1990
  - Revised Total Coliform Rule/Distribution Rule - 2016
- Trihalomethanes, Haloacetic Acids, Total Organic Carbon
  - Stage 1 Disinfectants and Disinfection Byproduct Rule (D/DBP) - 1999
  - Stage 2 Disinfection Byproducts Rule - 2016
- Lead and Copper
  - Lead & Copper Rule - 1992
  - Lead & Copper Rule Revisions - 2007

Other Regulations

- **Consumer Confidence Reports** (CCR) Annual → Biennial (AWIA)
- Operators Certification

CROSS-CONNECTION CONTROL PROGRAM

Cross-Connection Control protects the public water system from contamination via a cross-connection.

In 2017 the District had identified over 6,900 backflow assemblies in the District. The District continues to identify additional assemblies and locations where existing service connections are required to add backflow assemblies.

CUSTOMER INQUIRIES

Inquiries are addressed by a number of District personnel, depending on the nature of the request.

The addition of AMI is changing the nature of customer communication. Identification of certain potential customer leaks occurs more quickly, without waiting for the normal billing cycle. The District then proactively contacts customers.

DESIGN AND CONSTRUCTION STANDARDS

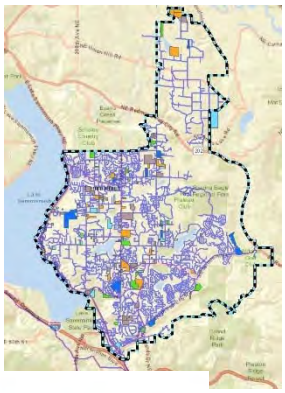

Send keyboard focus to media

Operation and maintenance of the District's water system is more efficient when built to consistent standards. The District's design standards are reviewed on a regular basis to ensure installation of high-quality materials and incorporate new technology and products.

The **process** to install new facilities requires:

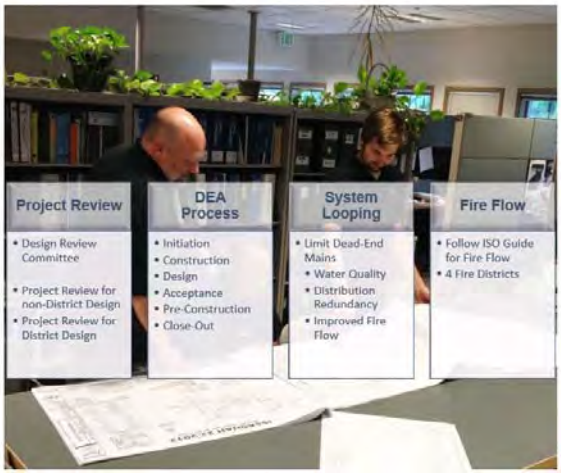

- Policies and Procedures
- Design Standards
- Construction Standards
- Construction Certification

Design standards provide requirements for:

- Pipeline Size
- Pipeline Velocity
- Fire Hydrant Locations
- Valve and Valve Clusters
- Water Service Pressures
- Pressure Reducing Valves
- Booster Pump Stations

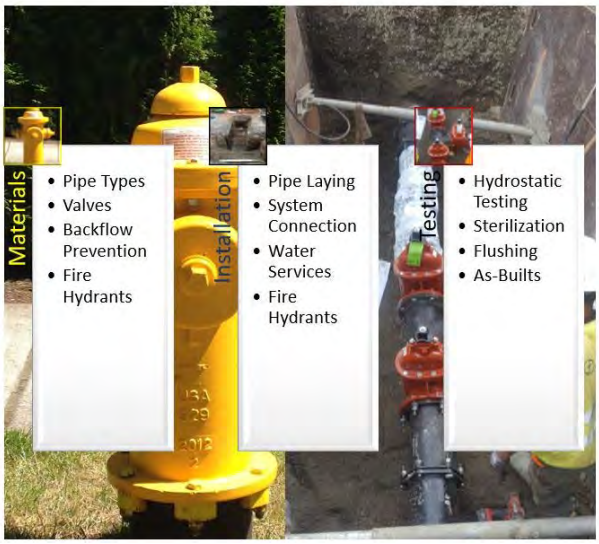

Construction Standards cover:

- Materials
- Installation
- Testing

CAPITAL PLAN

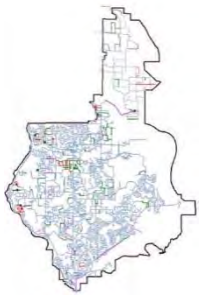

The Capital Plan included in the Water Comprehensive Plan is based on prior elements of the Comprehensive Plan, and also consistent with the District adopted budget.

Capital Plan elements come from:

- Analysis of Source, Storage and Distribution System
- Redundancy and Seismic Resiliency Studies
- Operation and Maintenance Program

Cost estimates for each identified project are based on:

Projects are grouped in the following categories:

- Combined: *District wide programs, that may have both a water and sewer component.*
- General:*Plans, studies, hydraulic model and equipment*
- Supply:*Projects at well. Includes consideration of additional treatment at Well 9 for PFAS.*
- Booster Pumps:*Projects to improve service to the 650 Zone*
- Storage:*Seismic resiliency, coatings, and 1 new tank*
- Distribution System:Mains and Pressure Reducing Valves
  - o Transmission - *9 projects*
  - o Fire Flow - *18 projects*
  - o Redundancy - *77 projects*
  - o Projects in Process - *5 Capital Improvement Projects and 24 Developer Extension Projects currently under construction (or completed)*

The **funding source and likely funding type** are identified for each project. Some projects may have funding from multiple sources.

CAPITAL IMPROVEMENT PROGRAM SUMMARY	10-yr CIP	2028-2037	Future Projects 2038+
Sub-Total: Funded by General Facilities Charge	$12,844,177	$14,817,049	$23,064,000
Sub-Total: Funded by Local Facilities Charge	$18,952,440	$25,863,923	$2,046,534
Sub-Total: Funded by Water Operating Fund	$11,231,966	$17,498,736	$1,616,000
Sub-Total: Funded by Capital Renewal Fund	$931,227		
Sub-Total: Funded by SPW Joint Facility Fund	$294,000	$192,500	
Sub-Total: Funded by Other including DEAs, ULIDs, grants, or other	$10,847,750	$887,000	
Total Forecast Project Cost Of Water System Improvements	**$55,101,560**	**$59,259,208**	**$26,726,534**

The **Capital Plan funding summary** is used to develop the Financial Plan
10 yr, 20 yr, Future years

FINANCIAL SUMMARY

Send keyboard focus to media

The Financial Summary considers a plan for financing the operating and capital needs of the water system.

The District's financial status is reviewed regularly and water rates are adjusted as needed to cover costs.

The Water Comprehensive Plan Financial Study

- Evaluates the sufficiency of revenues to fund projected operating and capital needs.
- Develops a strategy of rate adjustments needed to cover costs in excess of available revenues
- Reevaluates the Water General Facility Charges

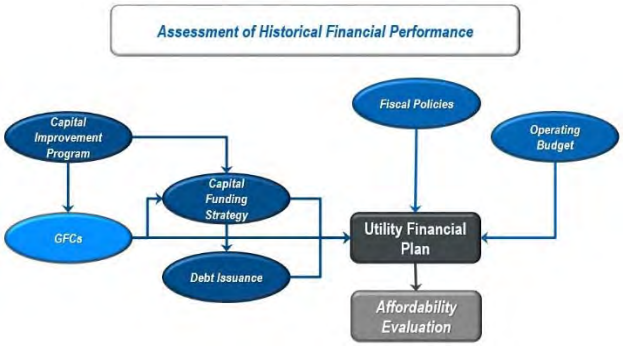

Financial Plan Overview shows the inter-relationships of the District's financial elements

Operating Expense Forecast is based on a series of assumptions

Water Revenue is required to fund Operating Expenses plus the proposed $56.5 Million in Water Capital Projects from 2018-2027

Operating Forecast

Operating Revenue Projections	Operating Expense Projections
• Assumed customer growth – 1.3% per year (2019 – 2021) – 1.0% per year (2022 and beyond) • Operating revenue: – Based on 2019 Budget – Revenue from rates and customer related fees increase with growth	• Assumed annual cost inflation: – General: 3.0% – Labor: 5.0% • Operating expenses generally projected based on 2019 Budget; escalated – Adjusted for limited/one-time expenses – Water purchase costs per Cascade forecast – Taxes calculated on projected revenues

Estimated to require annual rate increases of 3.75% per year

Adoption of the Plan does not adopt the rate increase

Rates are considered each year by the Board

Water Revenue Requirement

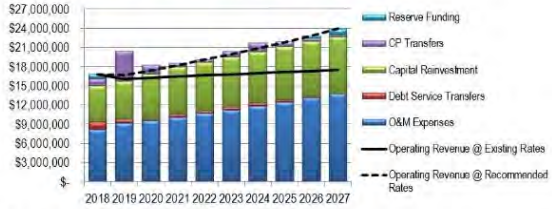

- Rate increases will be needed to:
  - Meet District's capital reinvestment goals *(funding 80% of replacement cost depreciation)*
  - Fund capital projects and anticipated debt service
  - Achieve minimum balance target *(90 days of O&M; = $2.2 million)*
- Estimated required annual rate increase = 3.75%
  - Rate increases are not set through the Comprehensive Plan, but by separate Board action

Water General Facility Charge (GFC) Evaluation

GFCs are a connection charge that is imposed as a condition of service on new customers connecting to the water system.

The GFC is based on existing and planned capital infrastructure investment. The GFC includes costs for:

- Supply
- Storage
- Treatement
- Booster pump stations
- Pressure reducing stations
- Distribution system transmission mains
- General system assets

GFC Calculation uses an **Average Cost Methodology**

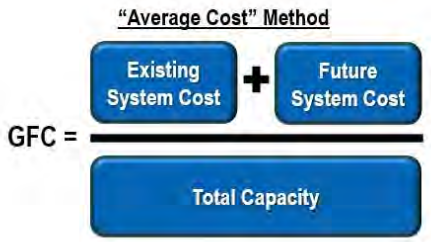

Key steps:

- **Define the "cost of the system"**
  - Existing assets (plus interest)
  - Capital program
- **Define the customer/capacity base**
  - How many equivalent residential units (ERUs) does the system serve?
  - How many ERUs can the system serve (existing capacity + added capacity from CP)?

Should only include costs funded by the utility.

Water GFC Calculation	Supply	Storage	Treatment	Mains	Pumping	Hydrants	General	Total
Total Cost Basis	$21,632	$37,190	$9,009	$58,699	$5,517	$3,069	$25,661	$160,777
Total Customer Base in ERUs [1]	27,717	33,006	29,318	32,815	29,318	31,668	27,225	
Total GFC per ERU	**$780**	**$1,127**	**$307**	**$1,789**	**$188**	**$97**	**$943**	**$5,231**

Comparing the updated GFC calculation to prior calculation:

- Calculated in 2014 = $4,729 per ERU
- Adjusted by Construction Cost Index from 2014-2018

  2018 GFC = $5,342 per ERU
- Updated Calculation = $5,231 per ERU ← Board will consider in July 2019

PLAN REVIEW AND COMMENT

Send keyboard focus to media

The 2018 Water Comprehensive Plan is now in the review and comment phase.

- SEPA
  - 2/19/2019 Determination of Non-Significance
  - 3/11/2019 SEPA Comments due
- 2018 Water Comprehensive Plan
  - 2/25/2019 Adopted for Public Distribution
  - 2/26/2019 Posted on District Website
  - 3/11/2019 Public Meeting
  - 4/30/2019 Land Use Agency Consistency Comments Requested (Sammamish, Issaquah, King County)
  - 6/11/2019 Comments to Plan Due

2018 WATER COMPREHENSIVE PLAN
PUBLIC MEETING RECORD

9. SPWSD Board of Commissioner Minutes for March 11, 2019

   Public Meeting providing overview of the 2018 Plan

- Reported on the City of Federal Way excise tax litigation. The districts' appellants in that litigation must file their opening brief by April 5, 2019. The Supreme Court will then determine whether to grant direct review of the districts' appeal. If so, the matter will probably be argued before the Supreme Court this fall.

General Manager

- Reported Cascade Water Alliance (CWA) is hosting their 20th Anniversary Lunch on Monday, March 25, 2019. Reported on an upcoming CWA meeting where discussion could include items which have the potential to impact the wheeling water charge the District pays monthly.
- Reported the Washington Association of Sewer and Water Districts (WASWD) has scheduled a meeting with agencies involved in the Stormwater Injection Group for Tuesday, March 26, 2019.
- Reported the City of Sammamish is hosting a reception for City Manager candidates this Friday, March 15, 2019 at 6:30 p.m.
- Reported Marissa Huntley will be starting next Monday, March 18, 2019, as the new Executive Assistant.

Commissioners

Commissioner Harman

- Reported on his attendance at the Sno-King Water District Coalition meeting today.
- Reported on his attendance at a recent Regional Water Quality Committee meeting.

Commissioner Shustov

- Reported on her attendance at a recent Metropolitan Water Pollution Abatement Advisory Committee (MWPAAC) meeting.

Commissioner Warren

- Provided an update on the efforts of the King County Wastewater Treatment Contract Group that CWA has been facilitating.

RECESS

At 4:51 p.m. the Board recessed until reconvening for the public information meeting scheduled at 6:00 p.m.

PUBLIC INFORMATION MEETING REGARDING 2018 WATER COMPREHENSIVE PLAN

President Warren opened the public information meeting to discuss the 2018 Water Comprehensive Plan (2018 Plan) at 6:00 p.m. The Board, along with District staff Regenstreif, Krauss, Wong, Barton, Tuchscherer, and Anderson were in attendance to address comments and questions. In addition, Rodney Langer, lead consultant with CHS Engineers, and David Stangel, hydraulic analysis consultant with Murraysmith, were in attendance to address comments and questions as well. Following introductions, Regenstreif provided an overview presentation of the 2018 Plan. There were no questions regarding the 2018 Plan from the public in attendance.

This page intentionally left blank.

SAMMAMISH PLATEAU WATER & SEWER DISTRICT
KING COUNTY, WASHINGTON

RESOLUTION NO. 4851

RESOLUTION OF THE BOARD OF COMMISSIONERS OF SAMMAMISH PLATEAU WATER AND SEWER DISTRICT, KING COUNTY, WASHINGTON, ADOPTING THE 2018 WATER COMPREHENSIVE PLAN AND APPROVING THE PLAN FOR PUBLIC DISTRIBUTION IN ACCORDANCE WITH WAC 246-290-100.

WHEREAS, the Sammamish Plateau Water and Sewer District ("District") is a municipal corporation providing water and sewer utility services pursuant to Title 57 RCW; and

WHEREAS, Chapter 57.16.010 authorizes the District to adopt a general comprehensive water system plan and the District has previously done so by the adoption of the 2010 Final Comprehensive Water System Plan with Final Revisions and the 2012 Amendment to Such Plan on April 2, 2012 by Resolution No. 4143 (collectively referred to as "the Water Comprehensive Plans"); and

WHEREAS, the District Board of Commissioners ("Board") now deems it desirable to adopt an updated and revised Water Comprehensive Plan and Appendices dated December 2018 ("the 2018 Water Comprehensive Plan") which is incorporated herein in full by this reference; and

WHEREAS, the Board has considered the proposed 2018 Water Comprehensive Plan which was prepared for the District by CHS Engineers, consulting engineers, CDM Smith, consulting hydrogeologists, Murraysmith (previously Murray Smith & Associates,) Inc, consulting engineers with the hydraulic model, and FCS Group for the financial analysis; and

WHEREAS, the District acknowledges that, pursuant to RCW 57.16.010, the Washington State Department of Health, King County, City of Sammamish ("Sammamish") and City of Issaquah ("Issaquah") must approve the 2018 Water Comprehensive Plan; and

WHEREAS, based on a SEPA checklist prepared regarding the proposed adoption of the 2018 Water Comprehensive Plan as a non-project action, a SEPA Determination of Non-Significance ("DNS") was issued by John Krauss, District Manager and District Responsible SEPA Official, on February 19, 2018, in conformance with the District's SEPA Resolution No. 3209; now, therefore,

BE IT RESOLVED by the Board of Commissioners of Sammamish Plateau Water & Sewer District, King County, Washington, as follows:

1. The 2018 Water Comprehensive Plan is hereby approved and adopted as the District's Water Comprehensive Plan effective the date set forth below, and is further approved for public distribution in accordance with WAC 246-290-100.

2. The 2018 Water Comprehensive Plan shall be submitted to the legislative authorities of King County, Sammamish and Issaquah and to appropriate state agencies, including the Washington State Department of Health, for approval by those jurisdictions and agencies as provided by law.

ADOPTED by the Board of Commissioners of Sammamish Plateau Water and Sewer District, King County, Washington, at a regular open public meeting held on the 25th day of February 2019.

Individual Commissioner's Vote on this Resolution:

Approved:	✓	Lloyd Warren, President and Commissioner
Opposed:		
Abstained:		
Absent:		
Approved:		Ryika Hooshangi, Vice President and Commissioner
Opposed:		
Abstained:		
Absent:		
Approved:	✓	Mary Shustov, Secretary and Commissioner
Opposed:		
Abstained:		
Absent:		
Approved:	✓	Tom Harman, Commissioner
Opposed:		
Abstained:		
Absent:		
Approved:		Mahbubul Islam, Commissioner
Opposed:		
Abstained:		
Absent:		

State of Washington
DEPARTMENT OF HEALTH
NORTHWEST DRINKING WATER REGIONAL OPERATIONS
20425 72nd Avenue South, Suite 310 • Kent Washington 98032-2388

REC'D MAY 24 2019

May 21, 2019

SCOTT JONAS
SAMMAMISH PLATEAU WATER & SEWER DISTRICT
1510 228TH AVE SE
SAMMAMISH WA 98075

RE: Sammamish Plateau Water & Sewer District, ID#40900
King County
Water System Plan – 2019 - Comments
Submittal #19-0208

Dear Mr. Jonas:

Thank you for submitting the Water System Plan (WSP) for Sammamish Plateau Water & Sewer District (the District) received in this office on February 28, 2019. We have reviewed the plan and offer the following comments. These comments must be adequately addressed prior to approval of the WSP.

System Description

1. Provide a determinations of local government consistency from the Cities of Issaquah and Sammamish.

2. Please respond to review comments from King County. Adequate responses to their issues will be necessary in order to receive a WSP Adoption Ordinance from King County.

3. Section 1.8.4 Direct Connection and Remote Systems, page 1-35, implies that the District will not allow new Group B public water systems within the retail service area. Please clarify the intent.

Basic Planning Data

The District appears to have a unique method of understanding system demand based on customer class and meter size. We find it a little difficult to understand, but believe it serves the District in determining water availability for new services. Responses to the following questions aim to help us better understand this approach and ensure the approach is comparable to a typical equivalent residential unit (ERU) analysis.

4. The column headings for ERU throughout the chapter do not appear to represent what we define as ERU. For example, Table 2-1 Sizes and Types of Meters by Customer Class, the ERU's appear to be based on meter size. This representation does account for larger demands through larger meters. Would it be more appropriate to label the ERU column as 'weighted number of connections'?

5. Table 2-2, Multi-Family Units per Connection, shows 198 units for 174 connections on the ¾ inch meter size. How is it that the number of units for the multi-family connection is not at least twice the number of connections? Could these be single homes with one service meter and an accessory dwelling unit? Please discuss.

6. Distribution system leakage (DSL) exerts a real demand on system. Did the District evaluate the DSL ERU value? How was the consumptive volume from DSL incorporated into the demand forecast?

7. Table 2-9, Historical Equivalent Residential Unit (ERU) Analysis (2014-2016), again refers to ERUs.

    a. Were the ERUs listed here determined in the same manner as with Table 2-1?

    b. ERU_{ADD} represents the average day demand in gallons per day per full-time residential connection (gpdpc). We recommend representing full-time as connections that show more than the 50 gallons per day per person consumptive use. Has this analysis applied full-time status to all single-family residential connections with nonzero meter values? Is the District confident that the majority of the single-family residential connections are full-time?

    c. Is the column heading 'ERU Water Use Factor (gpd/ERU)' intended to represent what we refer to as ERU_{ADD} in the Draft Water System Design Manual (https://www.doh.wa.gov/Portals/1/Documents/4200/DRAFT%20WSDM.pdf)?

    d. What happens in this analysis if multi-family residential, non-residential, and DSL ERUs are calculated using ERU_{ADD} equal to 213gpdpc and the actual annual consumption for each customer class? Are the total number of ERUs comparable to the number of ERUs used in chapter 3 system analysis?

System Analysis

Nice work summarizing the hydraulic model results in chapter 3. We especially appreciate the reference to the related capital improvement projects that address the shortfall identified in the model.

8. Section 3.1.1 Design Criteria refers to the evaluation uses the assumption that the sources will operate 24 hours per day. We recommend assuming the sources will operate for 20 hours per day for added safety factor.

9. Section 3.3.6 refers to Plateau Zone hydraulic analysis results.

    a. Regarding system pressure greater than 100psi or 120psi, in our experience customers are not always aware of their responsibility to maintain individual pressure reducing valves. When pressure reducing valves fail, appliances break or property floods, understandably some people get upset. Consider how the District might provide customer education.

    b. Please note that individual booster pumps are not an acceptable long-term solution when minimum system pressure requirements are not met at the distribution main.

Water Use Efficiency Program (WUE) and Water Rights Assessment

10. Respond to Department of Ecology's letter dated March 21, 2019.

Source Protection

No comment

Operations & Maintenance

Very nice tabular form summarizing major system components.

11. Have you adopted the Water Main Break Protocol for Chlorinated Systems? (DOH Publication 331-583 – 1/1/2017)

12. Is the District reporting distribution system disinfectant residuals? As a system that purchases surface water, the District is required to report the distribution system disinfectant residuals. The report should include distribution system disinfectant residuals for every calendar day and include the disinfectant residuals collected at the same time and place as the routine coliform samples.

13. Section 6.3.1.1 Plateau Zone Components, page 6-26 refers to occasional grab sample verification of the pH analyzer. Please consider implementing EPA Method 150.3: Determination of pH in Drinking Water. It provides guidance and outlines best practices for measuring pH.

14. In Appendix J of the December 2018 Water Comprehensive Plan, the District provided an updated Coliform Monitoring Plan, Triggered (Groundwater) Source Monitoring Plan, *E.coli* response plan and Standard Operating Procedure. Also, the comprehensive plan discussed monitoring plans in section 6.4.11.1.

    a. 6.4.11.2; Table 6-25. Please specify whether each routine (coliform) sample site location is a dedicated sample stand or a customer's tap or other site characteristic. We assume that all coliform 'repeat' sites are not sample stands however, please clarify.

    b. Appendix J, Water Quality Monitoring. PDF p. 77 of 167 Table 4 GWR Triggered Monitoring Details, PDF 35 of 167 Triggered sample sites table, WSP page 6-70, Table 6-25 Monthly Bacteriological Monitoring Locations. We suggest adding a separate column for the interties source of supply that the District intends to monitor. The intertie source-feed location is not required to be monitored per the groundwater rule (GWR).

    c. Appendix J, Water Quality Monitoring. PDF p. 10 of 167. The District recently updated its Water Facilities Inventory with the Department of Health such that for the population served, 70 monthly routine coliform samples are now required. The District has been collecting 70 such samples. No response needed.

    d. Appendix J, Water Quality Monitoring. PDF p. 11 of 167. With the Revised Total Coliform Rule (RTCR) there has been a nomenclature change.

        i. A non-acute MCL violation is now called Treatment Technique Trigger that triggers a RTCR assessment (Level 1 or Level 2 assessment). An acute MCL violation is an *E.coli* MCL violation, which triggers a Level 2 assessment.

        ii. A major repeat violation is now called a treatment technique trigger that triggers a RTCR assessment (Level 1 or Level 2 assessment).

    e. Appendix J, Water Quality Monitoring. PDF p. 12 of 167. For systems taking forty or more routine samples per month, if the system exceeds 5.0 percent total coliform-positive samples for the month it will have a treatment technique trigger that requires performing an assessment (Level 1 or Level 2). Please update.

    f. Appendix J, Water Quality Monitoring. PDF p.13 of 167. Note that if a sanitary defect identified in an assessment is not corrected within 30 days of learning about the treatment technique trigger, then a purveyor is allowed to provide the Department a corrective action plan that extends the time period to fix the sanitary defect.

g. Appendix J, Water Quality Monitoring. PDF p.14 of 167. Source Water *E.coli* Response.

   i. Please note that if NE Sammamish S&W has a total coliform positive sample in their distribution system, they will need to notify the District to sample any and all of the District's groundwater sources that were in use on the date of the total coliform positive sample. This is consistent with the groundwater rule.

   ii. If NE Sammamish S&W has an *E.coli* positive source sample in any groundwater source, that situation accords with the GWR. This scenario requires NE Sammamish S&W to shut off that groundwater source or install disinfection treatment that meets 4-log viral inactivation level treatment. NE Sammamish S&W would also have a public notice obligation to its customers including to Sammamish Plateau. Similarly, if Sammamish Plateau has an *E.coli* positive source sample in any groundwater source, the same conditions apply.

h. The District reports non-residential connections however, does not yet report a transient non-community population (visitor, travelers, patients, customers) or non-transient non-community population (students, employees, daycare children).

Standard Plans & Specifications
No comment

Capital Improvement Program
We commend the District for their implementation of the Asset Management program. No response needed.

Financial Program
No comment

Implementation
The implementation chapter is an excellent summary of how the District will continue to provide safe and reliable drinking water. No response needed.

Other Documentation

15. The water system must meet the consumer input process outlined in WAC 246-290-100(8). Please include documentation of a consumer meeting discussing the WSP, prior to DOH approval of the WSP.

16. Prior to DOH approval, the District's governing body must approve and adopt the WSP.

17. A signed SEPA checklist is a part of the WSP submittal. Provide a signed SEPA Threshold Determination.

18. Include any comments from adjacent purveyors and the District's response to those comments.

19. Is the District a member of the Washington State Water/Wastewater Agency Response Network (WAWARN)? Federal Emergency Management Agency states prior to reimbursement, they will ask for mutual aid documentation. Becoming a member of WAWARN demonstrates both managerial and financial capacity.

We hope that you have found these comments to be clear, constructive and helpful in the development of your final draft WSP. We ask that you submit the revised WSP on or before **August 28, 2019**. In order to expedite the review of your revised submittal, please include a cover letter summarizing how each of the above comments was addressed in the revised WSP and where each response is located (i.e., page numbers, Appendices, etc.)

Regulations establishing a schedule of fees for review of planning, engineering, and construction documents were adopted August 3, 2007 (WAC 246-290-990). The total cost is **$5,484.00**. An itemized invoice is enclosed. Please note that this fee covers our current review and one more submittal for this project. If additional submittals are required, then an invoice for additional fees will be included with our final approval letter. Please remit your complete payment in the form of a check or money order within thirty days of the date of this letter to: **WSDOH, Revenue Section, PO Box 1099, Olympia WA 99507-1099.**

Thank you again for submitting your draft Water System Plan for our review. If you have any comments or questions concerning our review, please contact me.

Sincerely,

Richard Rodriguez

Richard Rodriguez
Regional Planner
Northwest Drinking Water Operations
(253) 395-6771

cc: Brietta Carter, DOH
Ria Berns, WSDOE – NWRO
Steve Hirschey, King County UTRC
Rodney Langer, P.E., CHS Engineering, Inc
Jay Regenstreif, P.E., Sammamish Plateau
Jay Krauss, General Manager, Sammamish Plateau

STATE OF WASHINGTON
DEPARTMENT OF ECOLOGY
Northwest Regional Office • 3190 160th Ave SE • Bellevue, WA 98008-5452 • 425-649-7000
711 for Washington Relay Service • Persons with a speech disability can call 877-833-6341

RECEIVED
MAR 26 2019
DEPARTMENT OF HEALTH
NW DRINKING WATER

March 21, 2019

Richard Rodriguez
Department of Health – Drinking Water Division
20425 72nd Ave South, Suite 310
Kent, WA 98035-2388

Re: Sammamish Platea Water and Sewer District (SPWSD), ID #40900, Draft Water System Plan (DWSP) review (Submittal #19-02088)

Dear Richard Rodriguez:

The following comments regarding the SPWSD DWSP are submitted as provided in the 2007 Memorandum of Understanding.

In tables 4.14 and 4.15 of the DWSP, SPWSD has not followed standard protocol in presenting the interrelationship between and among their water rights. There are also errors in the naming conventions for water rights numbers.

Examples of the first error type include the relationship between additive and non-additive being shown based on how portions of water right quantities are split between sources rather than on how they are split within and among different water rights. While the former may be informative regarding how the district operates its sources, this is not the purpose of the Water Right Self-Assessment and makes the assessment appear to contain more water rights than have been issued by the Department Ecology (Ecology). The district has previously been presented with the enclosed table which shows Ecology's evaluation of its water rights.

Ecology water rights have been numbered by the agency during the 102 years it has been issuing water rights. Water rights issued prior to the 1970s were numbered based on a separate umber being issued for each stage of development with Certificates having a unique number with respect to applications and permits.

Beginning in the 1970s, a new water naming protocol was introduced which is based on a single number being assigned to an application. These numbers are modified to reflect the stage of development bay adding an "A", "P", "C" or "CL" to the end of the number to indicate whether the water right document is and "A"pplication, "P"ermit, "C"ertificate or "CL"aim. Examples relevant to this comment are G1-22861C for a certificate and G1-26572P for a permit. As of the time this comment is being prepared, only one groundwater right held by the district (G1-26572P) remains in permit status (water right being developed), all others are certificated.

Other naming errors in table 4.14 and 4.15 involve the use of asterisks. Asterisks indicate that the water right document was originally issued prior to 1970 and that a new number, using the post 1970 protocol has been issued based on the original application number for the water right. An asterisk always follows after the source type and region codes and is separated by a dash. An example of the correct placement of an asterisk is G1-*09533C, indicates that this water right was initiated through the filing of application 9533 for a groundwater right ("G") in the NW region of Washington ("1"). The original water right number for pre-1970 issued certificates is often provided as a convenience by Ecology, but agency databases are primarily based on the post 1970s number with the asterisk to signify a converted number. Ecology's database can be queried for either number so the use of the older number in the Water Right Self-Assessment table is satisfactory. The original certificates commonly have "-A" at the end of the number, which is not needed in reporting or database queries.

If you have any questions regarding my comments, please contact me at (425) 649-7077 or by email at doug.wood@ecy.wa.gov.

Sincerely,

Douglas H. Wood, LHG
Hydrogeologist/Permitting Specialist

Enclosure: Ecology's Evaluation of Water Rights

Well No	Control No	Certificate	Priority	Qi_A	Qa_A	Qi_N	Qa_N
Well 1R	G1-00342C		7/7/1954	300.00	448.00		
Well 1R	G1-25438C		5/10/1989	200.00			448.00
Well 2 + 2R	G1-*09533C	6802	6/21/1968	500.00	800.00		
Well 2 + 2R	G1-00749C		5/12/1971	20.00	10.50		
Well 4R	G1-*10373C	7147	8/25/1969	200.00	224.00		
Well 4R	G1-23022C		12/9/1977	550.00			880.00
Well 7/8	G1-00289C		1/20/1972	3,200.00	936.00		
Well 7/8	G1-25428C†		4/24/1989	2,300.00	1,288.00		
Well 9	G1-26014C†		12/24/1990			2,000.00	1,608.00
Well 11.1 + 4R	G1-*07653C	6395	6/4/1965	100.00	160.00		
Well 11.1 + 11.2 + 4R	G1-23897C‡		7/31/1981	600.00	768.00		
Well 11.2	G1-22861C		5/2/1977	1,000.00	1,600.00		
Well 11.2	G1-26572P[1]		4/30/1992	580.00	568.45		
Well 10	G1-*06228C	5140	3/23/1962	100.00	22.50		
Well 10	G1-27166C		6/4/1993	500.00	378.50		186.50
Well 12R	G1-00027C		6/19/1970	100.00	108.00		
Well 12R	G1-24363C		7/25/1983	100.00	12.00		
Well 13R	G1-25963C		11/7/1990	200.00	224.00		
Well 13R	G1-25831C(A)		6/26/1990	62.48	86.68		
			Totals	**10,612.48**	**7,634.63**	**2,000.00**	**3,122.50**

Qi = Instantaneous Quantity (Pumping Rate) in gpm; Qa = Annual Quantity in ac-ft/yr; Qa_{NA} = Non-Additive Qa; † = Winter Only; ‡ Qa split 300 gpm each well and Qi split 468 ac-ft/yr to Well 11.1 and 300 ac-ft/yr to Well 11.2; [1]Includes amounts transferred from exempt wells

SPWSD Zone	Water Rights	Qi_A	Qa_A	Qi_N	Qa_N
Plateau	14 Cert, 1 Permit	10,150.00	7,203.95	2,000.00	3,122.50
Cascade View	4 Certificates	462.48	430.68	0.00	0.00

Jay Regenstreif

From: Paul Inghram <PInghram@psrc.org>
Sent: Wednesday, March 13, 2019 1:30 PM
To: Jay Regenstreif
Subject: Questions about Draft Plan

Follow Up Flag: Follow up
Flag Status: Flagged

Categories: Water Comprehensive Plan

Mr. Regnstreit,

Thank you for providing a copy of the draft Sammamish water comprehensive plan for review. It appears to be very thoroughly prepared. I'm hoping that you can answer a few questions about the growth assumptions you included in the plan.

The plan estimates demand using population forecasts for 2037 and "buildout." King County cities have growth targets out to 2031 and their local comprehensive plans may contemplate growth beyond that. I saw that the plan references the cities' comprehensive plans, but it wasn't clear to me if the forecasts you included directly relate to the growth planned by Issaquah and Sammamish. Do they?

King County will update growth targets in 2021 and the cities will update their plans in 2023. Under GMA they need to plan for a twenty year period, so presumably, their plans will be from 2023-2043. Will this water comprehensive plan be updated again prior to that to include the 2043 time period so that the cities can know if future growth can be served?

Often the term "buildout" is avoided in planning because cities are regularly making planning and zoning changes, just like the Sammamish town center plan that is referenced in the plan. King County's buildable lands report identifies zoning "capacity, " rather than buildout, although, even then it is likely that zoning in both cities will continue to be updated over time to support more growth. I believe some utilities use a very long time period, 50 or 75 years, to identify long-term needs, including replacement, even if growth projections aren't as precise for that time period. Have you completed a long term (more than 20-year) analysis? I didn't see one.

We are in the process of updating the regional long range plan to 2050 and would welcome your feedback, especially any utility impacts that future growth might have. More information is at psrc.org/vision.

Thanks again for the draft plan and information about the district.

Paul Inghram, AICP | Growth Management Director |Puget Sound Regional Council
1011 Western Ave Ste 500 | Seattle, WA 98104
206-464-7549 office | 206-790-0182 mobile | pinghram@psrc.org

Puget Sound Regional Council

NOTICE OF PUBLIC DISCLOSURE: This e-mail account is public domain. Any correspondence from or to this e-mail account may be a public record. Accordingly, this e-mail, in whole or in part, may be subject to disclosure pursuant to RCW 42.56, regardless of any claim of confidentiality or privilege asserted by an external party.

King County

Utilities Technical Review Committee
Department of Natural Resources and Parks
King Street Center
210 South Jackson Street, Suite 512
Seattle, WA 98104-3855
www.kingcounty.gov

REC'D JUN 10 2019

June 5, 2019

Jay Regenstreif, P.E.
Sammamish Plateau Water & Sewer District
1510 228th Avenue SE
Sammamish, WA 98075

Dear Ms. Regenstreif Jay

Thank you for submitting the draft Sammamish Plateau Water and Sewer District's (District) 2018 Water Comprehensive Plan (Plan) December 2018 for King County approval. The Plan was received on March 14, 2019. In accordance with King County Code 13.24, King County's Utilities Technical Review Committee (UTRC) has reviewed the Plan for consistency with the King County Comprehensive Plan and the King County Code (KCC).

In reviewing the Plan, the UTRC noted the Plan is well written, easy to follow, and is largely consistent with the County's comprehensive plan and code. We have identified three points of clarification that are necessary before we can make a recommendation to the King County Council for approval of the District's final plan. We request you include the following information in your final plan:

- Details regarding when the time-period starts for measuring timely and reasonable service when a request for service is received;
- Consistency statements from the Cities of Sammamish and Issaquah that affirm the water system plan is consistent with their respective planning efforts; and
- Statements clarifying whether the District is seeking to be a satellite management agency outside of the existing future service area of the District.

Often, the construction and/or maintenance of utility lines require work within the road right of way (ROW) for roads in unincorporated King County. We strongly recommend that all utilities that have proposed project within unincorporated King County, contact the King County Department of Local Services, Road Services, Engineering Services Section for coordination with the County's annual overlay program. Failure to do so may result in the denial of the permit to work within the ROW once an overlay of the road section has been completed. Although each utility has a set of construction standards and specifications for their projects, the current edition of the King County Road Design and Construction standards apply to any installation or work in these ROWs. Not adhering to

these standards could result in the installation of non-specified and approved methods and/or materials that are out of the specifications for King County and could potentially add additional costs to the purveyor for future repairs or adversely affect acceptance of those repairs/installations. The 2016 and 2007 King County Road Design and Construction Standards can be found on the World Wide Web at: http://www.kingcounty.gov/transportation/kcdot/Roads/EngineeringServices/RoadStandards2007.aspx

Finally, one of the issues not addressed in the plan is expired King County franchises held by the District. We are aware of the work you have initiated with King County's real estate management staff to update the franchises and the County will work expeditiously with you to finalize that work. We are not expecting any change to the plan for the franchise issue.

We look forward to seeing the final Plan and working with you to secure the King County Council's approval. The Council's action will represent King County's final action on the Plan. If you have any questions or concerns about any of the information in this letter, please do not hesitate to call me at 206-477-5387.

Sincerely,

Stephen Hirschey
Chair, Utilities Technical Review Committee

cc: Richard Rodriguez, Regional Planner, Washington State Department of Health

Seattle Public Utilities

June 7, 2019

Jay Regenstreif, P.E.
Sammamish Plateau Water & Sewer District
1510 228th Ave SE
Sammamish, WA 98075

Subject: Comments to Sammamish Plateau Water & Sewer District's 2018 Water System Plan

Dear Mr. Regenstreif:

Thank you for the opportunity to review and comment on the 2018 Water System Plan (WSP) for Sammamish Plateau Water & Sewer District (District). Our comments below include general comments and more specific comments on data gaps and corrections to the information presented in the WSP, particularly as related to Seattle Public Utilities (SPU) and its services to the District.

1. Water Quality:
    a. Referring to Tables 6-15, 6-16 and 6-17 – please explain why some parameters are listed but not analyzed. Also, please confirm that the parameters listed in these three tables are the most current. We recommend that an update be made to Table 6-15 to match the current list of primary and secondary parameters as shown in WAC 245-290-310 and in Tables 6-16 and 6-17 to match the most current federal regulations.
    b. The results described and presented in Section 6.4 appear to include only sampling conducted at the District's groundwater sources. While wells provide most of the water for the Districts customers, the WSP states approximately 20% of water supply is provided through regional connections, which is water provided by Seattle Public Utilities. Because customers drink this water as well, a summary of SPU water quality and SPU's compliance with federal and state drinking water regulations should be included in the WSP.
    c. The District participated in sampling for parameters under UCMR 1, 2 and 3. What parameters were sampled for and were any detections observed?
    d. In Section 6.4.5.1, please clarify the different numbers shown for acceptable detectable chlorine residuals (chlorine residual should be greater than 0.2 mg/L versus 0.01 mg/L). Also clarify which level is used by the District to determine compliance.
    e. On page 6-49, please correct the reference to optimal fluoride level per WAC 246-290-460. The current optimal fluoride level is 0.7 mg/L, not 0.9 mg/L.

2. Water Shortage Contingency Plan (WSCP):
    a. SPU updated its WSCP through our most recent WSP. A key change in our newest version is that the Advisory Stage is an internal planning phase only and does not have a public facing component. SPU's March 2018 WSCP can be found here: http://www.seattle.gov/util/Documents/Plans/Water/WaterShortagePlan/index.htm

If you have any questions on our comments or need additional information, please contact me at joan.kersnar@seattle.gov or (206) 684-0839.

Sincerely,

Joan M. Kersnar, P.E.
Drinking Water Planning Manager

cc: Kathy Curry, Wholesale Contracts Manager, Seattle Public Utilities

City of Sammamish Washington

Department of Community Development

801 228th Avenue SE ■ Sammamish, WA 98075 ■ phone: 425-295-0500 ■ fax: 295-295-0600 ■ web: www.sammamish.us

April 30, 2019

Jay Regenstreif
Sammamish Plateau Water
1510 228th Avenue SE
Sammamish, WA 98075

Re. Sammamish Plateau Water and Sewer District - 2018 Comprehensive Plan Draft Review

Dear Ms. Regenstreif,

The City of Sammamish has reviewed the Sammamish Plateau Water & Sewer District's 2018 draft Water Comprehensive Plan, received by our office on February 26, 2019. This Plan was reviewed by comparison to the Sammamish Comprehensive Plan, Land Use Plan and Zoning Map, and Development Regulations pursuant to WAC 246-290-108. We discussed our review of the 2018 Draft Water Comprehensive Plan with David Pyle, Deputy Director of the Community Development; Andrew Zagars, City Engineer; Kellye Hilde, Planning Manager; Tawni Dalziel, Senior Stormwater Program Manager; Miryam Laytner, Sr. Management Analyst; Sara Estiri, Management Analyst on April 17, 2019.

As a result of our review, we have 18 comments that have been identified in the enclosure. Please note that we signed the Local Government Consistency Determination Form under the condition that Sammamish Plateau Water & Sewer District revises and incorporates our comments and without other significant changes.

We request that when the Sammamish Plateau Water and Sewer District revises the 2018 Draft Comprehensive Plan, a copy of the draft be provided to us for our final review.

Please let us know if you note any inaccuracies or have any questions regarding the comments provided in the Local Government Consistency Determination Form. Please contact Kellye Hilde, Planning Manager at 425-295-0582 or khilde@sammamish.us.

Kellye Hilde
Planning Manager, ASLA
Department of Community Development

Enclosure:
Local Government Consistency Determination Form
City of Sammamish Staff Comments

Washington State Department of Health

Division of Environmental Health
Office of Drinking Water

Local Government Consistency Determination Form

Water System Name: Sammamish Plateau Water & Sewer District PWS ID: 409009

Planning/Engineering Document Title: Water Comprehensive Plan Plan Date: December 2018

Local Government with Jurisdiction Conducting Review: City of Sammamish

Before the Department of Health (DOH) approves a planning or engineering submittal under Section 100 or Section 110, the local government must review the documentation the municipal water supplier provides to prove the submittal is consistent with **local comprehensive plans, land use plans and development regulations** (WAC 246-290-108). Submittals under Section 105 require a local consistency determination if the municipal water supplier requests a water right place-of-use expansion. The review must address the elements identified below as they relate to water service.

By signing this form, the local government reviewer confirms the document under review is consistent with applicable local plans and regulations. If the local government reviewer identifies an inconsistency, he or she should include the citation from the applicable comprehensive plan or development regulation and explain how to resolve the inconsistency, or confirm that the inconsistency is not applicable by marking N/A. See more instructions on reverse.

Local Government Consistency Statement	For use by water system Identify the page(s) in submittal	For use by local government Yes or Not Applicable
a) The water system service area is consistent with the adopted land use and zoning within the service area.	See Note A	Yes Please see staff comments
b) The growth projection used to forecast water demand is consistent with the adopted city or county's population growth projections. If a different growth projection is used, provide an explanation of the alternative growth projection and methodology.	See Note B	Yes Please see staff comments
c) For cities and towns that provide water service: All water service area policies of the city or town described in the plan conform to all relevant utility service extension ordinances.	N/A	N/A
d) Service area policies for new service connections conform to the adopted local plans and adopted development regulations of all cities and counties with jurisdiction over the service area.	See Note C	Yes Please see staff comments
e) Other relevant elements related to water supply are addressed in the water system plan, if applicable. This may include Coordinated Water System Plans, Regional Wastewater Plans, Reclaimed Water Plans, Groundwater Management Area Plans, and the Capital Facilities Element of local comprehensive plans.	See Note D	Yes Please see staff comments

I certify that the above statements are true to the best of my knowledge and that these specific elements are consistent with adopted local plans and development regulations.

K Hilde 4.30.19

Signature Date

Kellye Hilde, Planning Manager, City of Sammamish

Printed Name, Title, & Jurisdiction

Consistency Review Guidance

For Use by Local Governments and Municipal Water Suppliers

This checklist may be used to meet the requirements of WAC 246-290-108. When using an alternative format, it must describe all of the elements; 1a), b), c), d), and e), when they apply.

For **water system plans (WSP)**, a consistency review is required for the service area and any additional areas where a municipal water supplier wants to expand its water right's place of use.

For **small water system management programs**, a consistency review is only required for areas where a municipal water supplier wants to expand its water right's place-of-use. If no water right place-of-use expansion is requested, a consistency review is not required.

For **engineering documents,** a consistency review is required for areas where a municipal water supplier wants to expand its water right's place-of-use (water system plan amendment is required). For noncommunity water systems, a consistency review is required when requesting a place-of-use expansion. All engineering documents must be submitted with a service area map (WAC 246-290-110(4)(b)(ii)).

A) **Documenting Consistency:** The planning or engineering document must include the following when applicable.

   a) A copy of the adopted **land use/zoning** map corresponding to the service area. The uses provided in the WSP should be consistent with the adopted land use/zoning map. Include any other portions of comprehensive plans or development regulations that relate to water supply planning.

   b) A copy of the **growth projections** that correspond to the service area. If the local population growth projections are not used, explain in detail why the chosen projections more accurately describe the expected growth rate. Explain how it is consistent with the adopted land use.

   c) Include water service area policies and show that they are consistent with the **utility service extension ordinances** within the city or town boundaries. *This applies to cities and towns only.*

   d) All **service area policies** for how new water service will be provided to new customers.

   e) **Other relevant elements** the Department of Health determines are related to water supply planning. See Local Government Consistency – Other Relevant Elements, Policy B.07, September 2009.

B) **Documenting an Inconsistency:** Please document the inconsistency, include the citation from the comprehensive plan or development regulation, and explain how to resolve the inconsistency.

C) **Documenting a Lack of Local Review for Consistency:** Where the local government with jurisdiction did not provide a consistency review, document efforts made and the amount of time provided to the local government for review. Please include: name of contact, date, and efforts made (letters, phone calls, and emails). To self-certify, please contact the DOH Planner.

The Department of Health is an equal opportunity agency. For persons with disabilities, this document is available on request in other formats. To submit a request, please call 1-800-525-0127 (TTY 1-800-833-6388).

Notes for
Department of Health Local Government Consistency Determination Forms

Water System Name:	Sammamish Plateau Water & Sewer
PWS ID:	40900 9
Planning Document:	Water Comprehensive Plan
Plan Date:	December 2018
Local Governments:	City of Sammamish, City of Issaquah, King County

Notes:

A. Service Area and Land Use and Zoning:
   a. Figures 1-1, 1-13 and 1-14.
   b. Chapter 1 pages 1-14, 1-26, 1-38,
   c. Chapter 2 pages: 2-19 through 2-24
B. Growth Projection:
   a. Chapter 2 pages: 2-14 through 2-24
C. Service Area Policies
   a. Chapter 1 pages: 1-34 through 1-46 and referenced appendices
D. Other Elements:
   a. Coordinated Water System Plan: Pages 1-14, 1-28, 1-31, 1-33
   b. Reclaimed Water Plans: Page 4-48 and Appendix N

801 228th Avenue SE ■ Sammamish, WA 98075 ■ phone: 425-295-0500 ■ fax: 295-295-0600 ■ web: www.sammamish.us

d) Service area policies for new service connections conform to the adopted local plans and adopted development regulations of all cities and counties with jurisdiction over the service area.

Staff Comments

1. Chapter 1, Page 1-37: A map identifying Group B wells locations should be included in this Plan as well as a description of how they are managed.
2. Chapter 1, Page 1-38: Urban Growth Area.
3. Chapter 1, Page 1-38: Please integrate language around plans to sign a Franchise Agreement with the City of Sammamish.
4. Chapter 1, Page 1-38: Drinking Water Quality;
    a. Describe the District's water quality monitoring program and/or plan for drinking water.
    b. Describe how the District addresses Department of Ecology mandates for low impact development and the impacts on groundwater. Reference or provide studies that demonstrate any negative impacts.
    c. Describe the District's long-term sustainability plan for aquifer recharge areas.
5. Chapter 1, Page 1-39: Oversizing;
    a. Provide a reference to a facility plan that shows where oversizing might be necessary.
    b. Describe the method for determining and identifying mainlines that may need to be oversized.

---

e) Other relevant elements related to water supply are addressed in the water system plan, if applicable. This may include Coordinated Water System Plans, Regional Wastewater Plans, Reclaimed Water Plans, Groundwater Management Area Plans, and the Capital Facilities Element of local comprehensive plans.

Staff Comments

1. Please indicate how you determine when to bring in or tap into the Cascade Water Alliance source. Are there any additional costs to do this?
2. CARA Map:
    a. Please provide your timeline for updating the CARA map.
    b. What is the scope of work?
    c. Please provide any updated policy to the City of Sammamish that may require review and updates to our development regulations.
    d. The City would like that District take ownership of the CARA maps.
3. Table 5-3 page 5-20, Agencies and First Responders: Please add City of Sammamish to the list.
4. Chapter 1, Section 1.7: Is there a need to include a section for the City of Sammamish? While the area is within the Plateau Zone, we do coordinate interlocal agreements (ILA) and are currently drafting up a Franchise Agreement between the City and SPWS.

City of Sammamish
Department of Community Development
801 228th Avenue SE ■ Sammamish, WA 98075 ■ phone: 425-295-0500 ■ fax: 295-295-0600 ■ web: www.sammamish.us

City of Sammamish
Staff Comments

a) The water system service area is consistent with the adopted land use and zoning within the service area.

Staff Comments

1. Chapter 1, Page 1-2, Figure 1-1: Overlapping adjacent service providers needs to be noted on this map or a new map added. A narrative describing the method of resolving conflicts in these overlapping areas also needs to be added.
2. Chapter 1, Page 1-2, Figure 1-1: Show the UGA and City boundary on this map.
3. Chapter 1, Page 1-26: Describe the PAAs (Evans Creek Preserve Trail, Swan Ridge neighborhood, 30-Acres Park, Aldarra Golf Club), Urban Growth Boundary, and Town Center sub-area.
4. Chapter 1,Page 1-26: The moratorium has been repealed, refer to Ordinance O2018-479.
5. Chapter 1, Page 1-26: Sammamish Plans that should be referenced include the following:
    a. Sammamish Storm and Surface Water Management Comprehensive Plan.
    b. Ordinance O2016-424.
    c. City of Sammamish Town Center Sub-Area.
    d. Capital Improvement Plans as adopted by the City, Resolution R2016-2022.
6. Chapter 1, Page 1-30, Figure 1-13: The R-4 interim and R-6 interim zones are not shown.
7. Chapter 1, Page 1-32, Figure 1-14: The City Boundary and UGA line are not shown. The current Water Service District Boundary in south-west Sammamish is not shown. (near MacDonald area)

---

b) The growth projection used to forecast water demand is consistent with the adopted city or county's population growth projections. If a different growth project is used, provide an explanation of the alternative growth project and methodology.

Staff Comments

1. Chapter 2, Page 2-19: Why are the multifamily numbers for Sammamish decreasing starting in 2023?
2. Chapter 2, Page 2-19, Table 2-11: Use one source of data and sort in ascending order. Move year 2040 to the end of the table.
3. Chapter 2, Page 2-21: Stating that population in our area is declining contradicts PSRC current projections that the region needs a plan for 1.8 million additional people and 1.2 million new jobs by 2050. Refer to the Vision 2050 Executive Summary, page ES-1 and the Draft SEIS.

Jay Regenstreif

From: Emily Arteche <emilya@issaquahwa.gov>
Sent: Wednesday, May 22, 2019 2:26 PM
To: Jay Regenstreif
Cc: Robert York
Subject: [SPAM] - RE: Sammamish Plateau Water Comprehensive Plan Consistency Checklist

Hi Jay,

My apologies but please see Issaquah updated populations (Issaquah Comprehensive Plan, update 2018, Page LU-26) to replace data on Page 2.20, Table 2-12

2020- 39,319
2025- 42,971
2031- 46,739

Thank you for contacting me. I will typically respond to your inquiry within 24 hours.

Emily Arteche
Senior Planner | Development Services Department | City of Issaquah
PO Box 1307 (mail)
1775 12th Avenue NW
Issaquah, WA 98027
425| 837-3086 (direct)
425| 837-3080 (fax)

From: Emily Arteche
Sent: Wednesday, May 22, 2019 2:06 PM
To: jay.regenstreif@spwater.org
Cc: Robert York <roberty@issaquahwa.gov>
Subject: RE: Sammamish Plateau Water Comprehensive Plan Consistency Checklist

Hi Jay,

Thanks for chatting on the phone today. I've made some comments regarding Issaquah's Comp Plan and one comment regarding the new water system plan, Pages 1-26 and 1-27. Please see below.

The City of Issaquah's Comprehensive
Plan includes policies for land use, including setting land use zoning, and also has policies for utilities and public services such as water and sewer service. All of the Providence Point and most of the North Issaquah sub-areas are within the Sammamish Plateau Water and Sewer District Retail Water Service Area. In addition, the City annexed the Lake Sammamish State Park and Highlands Drive Area, both of which include District service areas. The Highlands Drive Area was annexed to the City of Issaquah in 2008. Only a portion of the Lake Sammamish State Park is in the District's service area. Issaquah's plan does indicate ~~two~~ one PAA: East Cougar Mountain ~~and King County Island~~. ~~Both of these~~ This PAA~~s~~ ~~are~~ is south of the District's Future Water Service Area. The City of Issaquah currently ~~has~~ a had partial development moratorium in the City of Issaquah Central

Issaquah, initiated in 2016 but was lifted in 2018. Public utilities, such as the District, are required to support the projected growth as identified by the City's Comprehensive Plan, for the portion of the District within the City boundaries.

Additionally, the City's Water System Plan was adopted this year and the language on P.1-27 could be updated to reflect the planning horizon:

The City of Issaquah (City) 2018 Water System Plan (Plan) has been prepared according to Washington State Department of Health (DOH) requirements as described in Washington Administrative Code (WAC) 246-290. These regulations require the City to update and submit to DOH a water system plan for approval every 10 years. This plan updates and supersedes the 2012 Water System Plan Update.

The planning period includes a short-term horizon (10 years, through 2027) and long-term horizon (20 years, through 2037).

Thank you for contacting me. I will typically respond to your inquiry within 24 hours.

Emily Arteche
Senior Planner | Development Services Department | City of Issaquah
PO Box 1307 (mail)
1775 12th Avenue NW
Issaquah, WA 98027
425| 837-3086 (direct)
425| 837-3080 (fax)

From: Robert York
Sent: Wednesday, May 22, 2019 12:11 PM
To: Emily Arteche <emilya@issaquahwa.gov>
Cc: Jay Regenstreif <jay.regenstreif@spwater.org>
Subject: FW: Sammamish Plateau Water Comprehensive Plan Consistency Checklist

Thanks, Jay.

Emily, here is the form with some fields already completed.

Bob

From: Jay Regenstreif <jay.regenstreif@spwater.org>
Sent: Wednesday, May 22, 2019 11:59 AM
To: Robert York <roberty@issaquahwa.gov>
Subject: Sammamish Plateau Water Comprehensive Plan Consistency Checklist

Bob,
Here is the pre-filled in form for our ID and contact information.
The pdf is the notes referenced on the table for the Consistency Checklist – directing you to the sections in the Plan that are for those questions.

If you have any further questions, please let me know.

Jay Regenstreif, P.E.
Planning Engineer
direct 425.295.3215 e-mail
website facebook twitter youtube

Sammamish Plateau Water

Clean water is always there because we're always here.™
1510 228th Avenue SE; Sammamish, WA 98075; main 425.392.6256 fax 425.391.5389

NOTICE OF PUBLIC DISCLOSURE: *Public documents and records are available to the public as required under the Washington State Public Records Act (Chapter 42.56 RCW). Accordingly, this e-mail, in whole or in part, may be subject to disclosure pursuant to the Public Records Act, regardless of any claim of confidentiality, privilege or exemption asserted by a third party.*

CityofRedmond

REC'D JUN 03 2019

May 30, 2019

Jay Regenstreif. P.E.
Sammamish Plateau Water & Sewer District
1510 – 228th Ave SE
Sammamish, WA 98075

RE: Sammamish Plateau Water & Sewer District
2018 Water Comprehensive Plan – Draft Plan Review

Dear Ms. Regenstreif:

Thank you for the opportunity to review the District's 2018 Water Comprehensive Plan. The City of Redmond has reviewed the document and offer the following minor comments:

1. Based on the source adequacy evaluation summarized in Table 3-3, the 200 gpm normal operating capacity provided in the Agreement, the Cascade regional supply is sufficient in meeting current and future needs for the Cascade View Zone. If in the future the District has a need for additional water supply or changes need to be made in the provisions of the Interlocal Agreement due to the operational changes of the intertie, an amended agreement should be pursued between the City, Cascade Water Alliance, and the District.

2. On Table 4.15 Water Right Self-Assessment, the Maximum Qi for the 10 and 20-year Forecasted Purchase shows 0 gpm. It appears the District will stop using the CWA Northern Regional connection in the future.

   Is this information accurately shown or is it due to the annual water production strategy noted in footnote 3 of Table 4.15? In 2017 and 2018, the District purchased more than 34 acre-ft/year through the CWA connection. If the District is anticipating not using the Intertie in the future and terminating the Interlocal Agreement, the termination provisions in 11.2 of the Interlocal Agreement would govern.

3. On pages 4-61-62, 4.6 Interties:
   The locations of the regional connections are shown on Figure 1-7.
   The figure reference should be 1-8 and 1-11.

4. On page 6-9, Table 6-5 (cont.) Major System Components – Supply Sources
   CWA – North Regional Connection 400 gpm (DOH report) 780 gpm (8" diameter at 5 fps)
   200 gpm is the normal operating capacity. Maximum capacity of 400 gpm as needed when the District's two production wells are out of service. (2.4 of Agreement for Water System Intertie between the City of Redmond and Sammamish Plateau Water and Sewer District ("Agreement") dated February 11, 2005.)

   If you are just listing the pumping capacity and not what the allowable supply is, then the information is acceptable.

5. If in the future Sammamish Plateau would like to transfer the ownership of the intertie meter to CWA, the Interlocal Agreement with Redmond would need to be updated.

Please review the comments and contact the City if you have any questions or concerns. Thank you again for the opportunity to provide comments.

Sincerely,

Lynn M. Arakaki

Lynn Arakaki
Senior Engineer
City of Redmond
Public Works
Environmental and Utility Services Division
larakaki@redmond.gov
425.556.2841

Jay Regenstreif

From: Laura Keough <Laura@nesswd.org>
Sent: Thursday, February 28, 2019 5:36 PM
To: Jay Regenstreif
Subject: Water Comp Plan

Hi Jay. Thanks for allowing the District the opportunity to review and comment on the Sammamish Plateau Water 2018 Comprehensive Plan. The District has no comments.

Laura Keough
General Manager
NE Sammamish Sewer and Water District
425-868-1144

REC'D APR 05 2019

1111 – 207th Place NE
Sammamish, WA 98074
April 2, 2019

Sammamish Plateau Water
1510 228th Ave SE
Sammamish, WA 98075

I am writing as a consumer of Plateau Water and resident of Sammamish. I note the massive amount of construction taking place all over our community , with the obvious considerable increase of population, and am concerned that the supply of water , especially of our high quality water , will be inadequate to meet that increasing need. Will we have the capability to meet the future needs , with this increase of population ? Do we have contingency plans to meet this increase ? Let me know.

Thank you,
Carl H Schwartz

Carl Schwartz

Sammamish Plateau Water

1510 228th Avenue SE
Sammamish, WA 98075

Main: 425.392.6256
Fax: 425.391.5389

www.spwater.org

April 8, 2019

Carl Schwartz
1111 207th Pl NE
Sammamish, WA 98074

Re: Water Supply Planning

Dear Mr. Schwartz:

Thank you for your letter requesting information on the status of water supply planning by Sammamish Plateau Water. The District does plan for growth within our service area. This planning discussion is included in the District's Water Comprehensive Plan. The District Board of Commissioners adopted the most recent version of the Water Comprehensive Plan on February 25, 2019.

The Comprehensive Plan document is available on the District's website.

www.spwater.org Under the *About Us* menu tab, select Water Comprehensive Plan.

The 2018 Plan is provided by chapter. The Executive Summary provides a high-level overview, Chapter 2 addresses the growth planning aspect, and Chapter 4 addresses the source of supply strategy. If you have difficulty with the on-line version, please contact our office for alternatives.

The expected growth for the next 5 years is estimated by looking at currently proposed developments, the construction you are seeing now and in the next few years. Beyond the first 5 years, growth is estimated by using the growth rates provided by the Puget Sound Regional Council. The projected population discussion starts on page 2-14 in Chapter 2.

The District's water supply consists of both groundwater wells and surface water from the regional supply. The District's regional supply is provided through the District's membership in the Cascade Water Alliance. Between those two sources, the District does have supply to meet the anticipated growth in the District's service area. The source of supply strategy discussion starts on page 4-46 in Chapter 4.

If you have further questions or comments after you have had a chance to review the available information, please let me know.

Sincerely

Jay Regenstreif

Jay Regenstreif, P.E.
Planning Engineer

19-04-20/Schwartz WCP.docx

SAMMAMISH PLATEAU WATER & SEWER DISTRICT
2018 WATER COMPREHENSIVE PLAN
AGENCY COMMENTS AND RESPONSES

FORMAT:
Agency Comment numbered

KC#:	King County comments	PSRC#:	Puget Sound Regional Council comments
DOH#:	Department of Health comments	DOE#:	Department of Ecology comments
SAM#:	City of Sammamish comments	ISS#:	City of Issaquah comments
SPU#:	Seattle Public Utilities Comments	RED#:	City of Redmond comments

NESSWD#: Northeast Sammamish Sewer & Water District comment

Black-italicized text: District response to agency comment, immediately following the comment.

KING COUNTY

KC1: Provide details regarding when the time period starts for measuring timely and reasonable service when a request for service is received.

Per Section 1.6, 3 years is the length of time to obtain water service that is considered timely and reasonable. This would allow for extension of a water main through the Developer Extension Agreement (DEA) process or a Utility Local Improvement District (ULID). The does assume the service requestor is diligently pursuing service, and the time expectation would start from application for a DEA or petitioning for a ULID. This more specific description information has now been included in Section 1.6.

KC2: Provide Consistency statements from the Cities of Sammamish and Issaquah that affirm the water system plan is consistent with their respective planning efforts.

The Consistency statements have been received and are included in Appendix V. This is the appendix that includes Agency comments.

KC3: Provide statements clarifying whether the District is seeking to be a satellite management agency outside of the existing future service area of the District.

The District is not seeking to be a satellite management agency inside or outside of the Future Service Area of the District. This is indicated in Section 1.8.4, and a clarifying statement has been added to the introductory paragraph of Section 1.8.4.

KC4: Road standards statement.

Noted.

KC5: Expired King County Franchise situation is noted, as well as an understanding that work is underway between the District and County regarding the franchise.

Appendix F, Design Standards, notes the preferred location of water mains is in the right-of-way. The District applied for King County Franchise in 2011, immediately after completing the District's 2010 Water Comprehensive Plan. The District also applied for a King County Franchise

in 2018. The District continues to negotiate a franchise with King County. The negotiation of a franchise is noted in Section 1.2.4 Federal, State and Local Regulations.

PUGET SOUND REGIONAL COUNCIL

PSRC1: The plan estimates demand using population forecasts for 2037 and "buildout." King County cities have growth targets out to 2031 and their local comprehensive plans may contemplate growth beyond that. I saw that the plan references the cities' comprehensive plans, but it wasn't clear to me if the forecasts you included directly relate to the growth planned by Issaquah and Sammamish. Do they?

The Plan uses the PSRC growth rates for estimates of growth rates beyond 2022. As noted in Section 2.2.2.2 Projected Population – Long Term ERU Forecast, this is to have consistency between the three different land use jurisdictions served by the District. Growth rates prior through 2022 are based on projects currently in the pipeline. The one exception is the Sammamish Town Center, where the growth was included prior to 2027 at the direction of City of Sammamish staff.

PSRC2: King County will update growth targets in 2021 and the cities will update their plans in 2023. Under GMA they need to plan for a twenty year period, so presumably, their plans will be from 2023-2043. Will this water comprehensive plan be updated again prior to that to include the 2043 time period so that the cities can know if future growth can be served?

The District's Water Comprehensive Plan will likely be approved for a period of 10-years. This is the approval period used by the Washington Department of Health, and the District is going to request that King County also approves the plan for a 10-year period. The District does continually track the growth and near-term growth rates for operational purposes, and also reviews all proposed zoning changes as they are proposed for potential effects on water and sewer service.

PSRC3: Often the term "buildout" is avoided in planning because cities are regularly making planning and zoning changes, just like the Sammamish town center plan that is referenced in the plan. King County's buildable lands report identifies zoning "capacity," rather than buildout, although, even then it is likely that zoning in both cities will continue to be updated over time to support more growth. I believe some utilities use a very long time period, 50 or 75 years, to identify long-term needs, including replacement, even if growth projections aren't as precise for that time period. Have you completed a long term (more than 20-year) analysis?

The suggested terminology change is noted, and will be considered for future Comprehensive Plans and related reports. The District has several plans that consider different longer horizons. The Comprehensive Plans identify major facility improvements that may extend beyond the 20-year planning horizon, and show as "Future Projects" in Table 8.1 – Capital Plan. In addition, the Asset Management Plan, discussed in Section 8.1 Development of the CP, is used to predict a potential replacement schedule for District assets, ranging from 20 years for assets such as pumps to over 100 years for many pipelines. Information developed through the Asset Management Plan feeds the District's Rate Model. The District's rates include a "Rehabilitation and Replacement" component to fund the future replacement of assets. The Asset Management Plan and Rate Model are updated regularly to refine asset life assumptions and their rate impact.

DEPARTMENT OF HEALTH

DOH1: Provide Consistency statements from the Cities of Sammamish and Issaquah that affirm the water system plan is consistent with their respective planning efforts.

The Consistency statements have been received and are included in Appendix V.

DOH2: Please respond to review comments from King County

See previous responses to comments KC1 through KC5.

DOH3: Clarify whether the District will or will not allow new Group B public water systems within the retail service area. Section 1.8.4 Direct Connection and Remote Systems, page 1-35.

The District's intent is to provide direct service wherever possible to properties within the Retail Service Area. However, this must be tempered with the requirements of provision of direct water service through a water main extension on a case by case basis. The District anticipates that most developments within the Retail Service Area would not be allowed to create a new Group B system. However, there may be cases where the District would allow those due to the limited nature of the proposed service compared to the cost of provision of direct water service.

DOH4: In Chapter 2, Table 2-1, the District method of determining Equivalent Residential Units (ERUs) appear to be based on meter size. This representation does account for larger demands through larger meters. Would it be more appropriate to label the ERU column as "weighted number of connections?"

The District does assign ERUs based on meter size, in all cases. This meter based size definition is used for connection charges and the basis for billing rates, and allows for equitable comparison and application of rates and charges between the different customer classes.
The use of the term ERU, in this context, is independent of the DOH definition of an ERU (i.e. ADD per system single-family residence). The ERU Water Use Factor (see Table 2-9) is developed separately for single-family, multi-family and non-residential customer classes. Demand forecasts are made based on the type of customer anticipated (zoning based) and the Water Use Factor for that customer type. See DOH7.c. for additional discussion regarding Table 2-9.

DOH5: Table 2-2, Multi-Family Units per Connection, shows 198 units for 174 connections on the 3/4-inch meter size. How is it that the number of units for the multi-family connection is not at least twice the number of connections? Could these be single homes with one service meter and an accessory dwelling unit? Please discuss.

The multi-family units served with 3/4-inch meters include two primary types of units.
1) Attached townhomes and duplexes where each unit has its own 3/4-inch meter. 2) Detached single condominium units in a development that includes both the detached units and multi-unit buildings. In both of these situations, the zoning is multi-family, and the units do not have their own tax parcel.

The billing rate for each of these units is a multi-family rate. The multi-family water billing rate differs from the single-family rate because it does not anticipate any irrigation use through the

meter. Irrigation is provided to these multi-family properties through separate irrigation meters that are billed at an irrigation rate.

DOH6: Did the District evaluate the Distribution System Leakage (DSL) ERU value? How was the consumptive volume from DSL incorporated into the demand forecast?

The DSL was not provided an ERU value. The consumptive volume was evaluated as shown in Table 2-3 for 8 years of data. The DSL was incorporated into the demand forecast by using a value just below the average level of DSL over the past 3 years. A slightly lower value was used as the trend was going down. This was discussed in Section 2.2.3, noted in the footnote to Section 2.2.3 on page 2-24, and presented in Table 2-16.

DOH7: Questions on the ERUs included in Table 2-9, Historical ERUs Analysis (2014-2016)

DOH7.a. Were the ERUs listed here determined in the same manner as with Table 2-1?

Yes.

DOH7.b. ERU ADD represents the average day demand in gallons per day per full-time residential connection (gpdpc). We recommend representing full-time as connections that show more than the 50 gallons per day per person consumptive use. Has this analysis applied full-time status to all single-family residential connections with nonzero meter values? Is the District confident that the majority of single-family residential connections are full time?

Note the footnote 1 to Table 2-9 indicates this is for meters with use greater than zero. The District is fairly confident of full-time status, once the dwelling has been occupied. The data does include meters for single-family dwellings that are at their initial occupancy, and may include less than normal monthly use during the move-in period.

The figure of 50 gpd/person may be high for identifying a representative full-time single-family residential connection. At an average of 2.8 persons per household, this would be 140 gpd per account, and 51,100 gallons per year or 6,831 cf per year per account. An overview analysis of 2016 single-family data for accounts that received 6 bills, and had use greater than zero, indicates that only 70 percent of the accounts would meet the criteria. Future review of the use per single family account using the automated metering infrastructure (AMI) data may lend insight into future calculations of the ERU ADD. The AMI data will allow monthly readings for all accounts, and a better indication of when full-time use actually begins.

DOH7.c. Is the column heading 'ERU Water Use Factor (gpd/ERU)' intended to represent what we refer to as ERU ADD in the Draft Water System Design Manual. (https://www.doh.wa.gov/Portals/1/Documents/4200/DRAFT%20WSDM.pdf)

Yes, for the single-family row. The multi-family and non-residential customer classes use the same approach as used for single-family, limited to their customer class.

DOH7.d. What happens in this analysis if multi-family residential, non-residential, and DSL ERUs are calculated using ERU ADD equal to 213 gpdpc and the actual annual consumption

for each customer class? Are the total number of ERUs comparable to the number of ERUs used in chapter 3 system analysis?

In Table 2-9, the Column titled 3-year Average ERU Water Use Factor does present the DOH ADD/ERU for the single family customer class. This is simply annual consumption divided by the "SPW ERUs" – that term meaning the ERUs as counted based on meter size for this customer class. As indicated in Table 2-1, most single family customers are counted as one ERU. Only 204 connections out of 16,241 (1.3%) have more than one ERU in this customer class.

In Table 2-9, ERUs and not connections were used to calculate ADD/ERU. The factors listed in that column for Multi-Family and Non-Residential are simply total water consumption divided by "SPW ERUs" Given the water use history and significant share of demand for these two customer classes, a class-specific approach was used, all based on SPW ERUs.

The current and forecast ERUs as presented in Table 2-15 uses the same definition of ERUs. The demand forecast in Table 2-16 uses the class-specific factors from Table 2-9 and the SPW ERUs forecast in Table 2-15 to develop the demand forecast.

The SF ADD/ERU is 48% higher than the MF ADD/ERU and 9% lower than the Non-Res ADD/ERU. We have analyzed the data from Tables 2-9 and adjusted the outcome of Tables 2-15 and 2-16 to understand the impact of using 213 gpd/ERU and annual water consumption as the basis for defining MF and Non-Res ERUs. The impact is summarized as follows and ultimately no changes to the Demand Forecast have been made.

For MF, the historical three-year average drops by a count of 1,151. This decrease was applied to the ERU count for 2017 in Table 2-15 and ERUs increased annually thereafter by the same annual percent change as currently presented, through 2027. The demand was then calculated annually using the revised ERU count and 213 gpd/ERU. The impact of this change would be to increase MF customer class demand by 7%. This increase is the same each year, but not compounded.

The same approach was used for the Non-Res class. For Non-Res, the historical three-year increases by a count of 11. This increase was applied to the ERU count for 2017 in Table 2-15 and ERUs increased annually thereafter by the same annual percent change as currently presented, through 2027. The demand was then calculated annually using the revised ERU count and 213 gpd/ERU. The impact of this change would be to decrease Non-Res customer class demand by 8%. This increase is the same each year, but not compounded. (Mixed use was included in the analysis of Non-Res, as it is calculated using the same factor as Non-Res, as noted in the footnotes to Table 2-16.).

The net result of these two adjustments is essentially no change early in the 10 year period, and up to 30,000 gallons in 2027 (0.5%).

In the course of this review, we found that the total annual consumption for the Non-residential customer class is incorrect and overstated. The correct values for 2014, 2015 and 2016 are 223.80, 272.36, and 257.38, respectively. Table 2.9 has been updated. This resulted in a change of 1 gpd in the three-year average use per ERU (i.e. <0.5%). No changes to the forecast are warranted, and such is noted in a revised footnote 4 for Table 2.9.

DOH8: Section 3.1.1 Design Criteria refers to the evaluation uses the assumption that the sources will operate 24 hours per day. We recommend assuming the sources will operate for 20 hours per day for added safety factor.

The analysis presented in the Plan demonstrates adequacy of source of supply assuming all normally operated sources are available for use 24 hours a day, to meet MDD. The analysis assumed that well sources in a zone were used first, followed by booster pump supply from a lower zone, and ultimately the interties as needed to meet the 2037 forecast MDD. The capacity of the system to meet MDD with all sources only operating 20 hours a day has been evaluated and the conclusion was that the system would still have surplus source capacity. The following changes have been made to the Plan:

3.1.1 – add sentence to end of paragraph: As discussed following Tables 3-2 and 3-3 below, the system was also evaluated under the condition that all sources were operated only 20 hours a day.

3.1.2.1 – add paragraph following Table 3-2: The analysis summarized in Table 3-2 assumes that well sources within a pressure zone are fully utilized first, then supplemented as necessary from booster pump station supply from a lower zone, and for the 297 Pressure Zone Group, the interties were the last source to be utilized. The analysis was repeated (but not presented in the Plan) assuming all sources were limited to 20 hours of operation. The same conclusion was reached, although the surplus decreases from 8.2 mgd to 4.8 mgd, for the 297 Pressure Zone Group.

3.1.2.2 – add paragraph following Table 3-3: The analysis summarized in Table 3-3 assumes that well sources are fully utilized first. They are adequate for the planning period as noted, but the available capacity for the North Regional Connection is added as surplus capacity. The analysis was repeated (but not presented in the Plan) assuming all sources were limited to 20 hours of operation. The same conclusion was reached, although the surplus for District Source decreases from 0.24 mgd to 0.13 mgd and for Total Source from 0.52 mgd to 0.37 mgd.

DOH9: Section 3.3.6 Plateau Zone hydraulic analysis results

DOH9.a. Regarding system pressure greater than 100 psi or 120 psi, in our experience customers are not always aware of their responsibility to maintain individual pressure reducing valves. When pressure reducing valves fail, appliances break or property floods, understandably some people get upset. Consider how the District might provide customer education.

New account customers must sign the original Water Application, which does provide information regarding the pressure, however, they may not fully understand what they are reading. District customer service and field service representatives do provide information on individual pressure reducing valves in response to customer inquiries regarding pressure, banging pipes, changes in their pressure, and leaks. The District does also has brochures that are mailed and handed out or can picked up at the District office.

The District previously had a welcome packet that included information about pressure reducing valves. An updated welcome packet is being developed in conjunction with the deployment of the AMI system customer portal.

DOH9.b. Please note that individual booster pumps are not an acceptable long-term solution when minimum system pressure requirements are not met at the distribution main.

There are two locations where there is not a specific improvement identified that would alleviate the low pressure situation. For these two locations the District may explore non-standard service options with the customers, to provide the opportunity for service at a higher pressure, involving connections to a higher pressure zone, to mains that are not adjacent to the property.

DOH10: Water Use Efficiency Program (WUE) and Water Rights Assessment. Respond to Department of Ecology's letter dated March 21, 2019

See responses under DOE Comments in the following.

DOH11: Have you adopted the Water Main Break Protocol for Chlorinated System? (DOH Publication 331-583 – 1/1/2017)

The District is currently working with a Seattle Public Utilities (SPU)/King County Water Quality Group to develop a Standard Operating Procedure (SOP). This will be added to District SOPs when completed.

The District's current SOP is to keep positive pressure in the system and water flowing until the main can be isolated and repaired.

DOH12: Is the District reporting distribution system disinfectant residuals? As a system that purchases surface water, the District is required to report the distribution system disinfectant residuals. The report should include distribution system disinfectant residuals for every calendar day and include the disinfectant residuals collected at the same time and place as the routine coliform samples.

Yes, monthly reporting for disinfectant residuals. The reporting includes:

- *Daily, every calendar day, disinfectant residuals are taken at the 297 Storage Tank and monitored through SCADA*
- *Monthly taken with routine coliform sampling from each bacteriological sample station.*

DOH13: Section 6.3.1.1 Plateau Zone Components, page 6-26, refers to occasional grab sample verification of the pH analyzer. Please consider implementing EPA Method 150.3: Determination of pH in Drinking Water. It provides guidance and outlines best practices for measuring pH.

The District will modify the pH sampling SOP to implement the EPA Method 150.3, including reporting methods.

DOH14: Questions regarding Appendix J – Coliform Monitoring Plan, Triggered (Groundwater) Source Monitoring Plan, *E.coli* response plan and Standard Operating Procedure, and Section 6.4.11.1.

DOH14.a. 6.4.11.2 Table 6-25. Please specify whether each routine (coliform) sample site location is a dedicated sample stand or a customer's tap or other site characteristic. We assume that all coliform 'repeat' sites are not sample stands however, please clarify.

All routine sample sites are dedicated sample stands. Repeat sites are hose bibs at customer locations in close proximity to the sample stand. This information has been added to Section 6.4.11.2

DOH14.b. We suggest adding a separate column for the interties source of supply that the District intends to monitor. The intertie source-feed location is not required to be monitored per the groundwater rule (GWR)
Appendix J, Water Quality Monitoring PDF p. 77 of 167 Table 4
GWR Triggered Monitoring Details, PDF 35 of 167 Triggered sample sites table,
WSP page 6-70, Table 6-25 Monthly Bacteriological Monitoring Locations

While the District is not required to get a triggered sample at the interties listed in these tables, the District chooses to sample for completeness of information in determine a potential source of the bad sample. Additional text has been added prior to Table 6-25 indicating that the interties are listed for completeness of water supply, but sampling the interties is not required.

DOH14.c. Appendix J, Water Quality Monitoring PDF p. 10 of 167. The District recently updated its Water Facilities Inventory with the DOH such that the population served, 70 monthly routine coliform samples are now required. The District has been collecting 70 such samples. No response needed

Comment noted.

DOH14.d. Appendix J, Water Quality Monitoring PDF p. 11 of 167. With the Revised Total Coliform Rule (RTCR) there has been a nomenclature change.

i. A non-acute MCL violation is now called Treatment Technique Trigger that triggers a RTCR assessment (Level 1 or Level 2 assessment). An acute MCL violation is an *E.coli* MCL violation, which triggers a Level 2 assessment.
ii. A major repeat violation is now called a Treatment Technique Trigger that triggers a RTCR assessment (Level 1 or Level 2 assessment).

The District is the in the process of updating the Coliform Monitoring Plan to match the updated terminology and format. This update is anticipated to be completed within 6 months, by February 2020. The required update is noted in Section 6.4.6.1.

DOH14.e. Appendix J, Water Quality Monitoring PDF p. 12 of 167. For systems taking forty or more routine samples per month, if the system exceeds 5.0 percent total coliform-positive samples for the month it will have a treatment technique trigger that requires performing an assessment (Level 1 or Level 2). Please update.

The District is the in the process of updating the Coliform Monitoring Plan to match the updated terminology and format. This update is anticipated to be completed within 6 months, by February 2020.

DOH14.f. Appendix J, Water Quality Monitoring PDF p. 13 of 167. Note that if a sanitary defect identified in an assessment is not corrected within 30 days of learning of the treatment technique trigger, then a purveyor is allowed to provide the Department (DOH) a corrective action plan that extends the time period to fix the sanitary defect.

The District is the in the process of updating the Coliform Monitoring Plan to match the updated terminology and format. This update is anticipated to be completed within 6 months, by February 2020. The allowance of the corrective action plan to extend the time period will be included in the update.

DOH14.g. Appendix J, Water Quality Monitoring PDF p. 14 of 167.

i. Please note that if NESSWD has a total coliform sample in their distribution system, they will need to notify the District to sample any and all of the District's groundwater sources that were in use on the date of the total coliform positive sample. This is consistent with the groundwater rule.

ii. If NESSWD has an *E.coli* positive source sample in any groundwater source, that situation accords with the GWR. This scenario requires NESSWD to shut off that groundwater source or install disinfection treatment that meets 4-log viral inactivation level treatment. NEWWSD would also have a public notice obligation to its customers including to SPWSD. Similarly, if SPWSD has an *E.coli* positive source sample in any groundwater source, the same conditions apply.

The District is the in the process of updating the Coliform Monitoring Plan. This update is anticipated to be completed within 6 months, by February 2020. Additional and clarifying language will be added to the section addressing Interaction with Wholesale Suppliers to include the similar actions required by the District if NESSWD has a total coliform distribution sample or E.coli positive groundwater source sample.

DOH14.h. The District reports non-residential connections however, does not yet report a transient non-community population (visitor, travelers, patients, customers) or non-transient non-community population (students, employees, daycare children).

The District has not historically reported these figures. This is a holdover from the period when there was almost all residential customers, with little commercial. In response to this comment District staff are gathering information on the non-community population, and will include figures on the 2020 WFI.

DOH15: The water system must meet the consumer input process outlined in WAC 246-290-100(8). Please include documentation of a consumer meeting discussing the WSP, prior to DOH approval of the WSP.

The District held a public meeting on the Comprehensive Plan on March 11, 2019. The meeting was advertised through local newspaper display ads, regional newspaper notices, District's website notices, and posting in the District Headquarters lobby. The meeting notice was also posted on the District's Facebook page and through Twitter. In addition, cover letters sent to agencies requesting their review of the 2018 Plan, included an invitation to attend the Public Meeting. The Public Meeting information is included in Appendix V.

DOH16: Prior to DOH Approval, the District's governing body must approve and adopt the WSP

The Draft Plan was adopted for public distribution on February 25, 2019 by Resolution No. 4851, which is included in Appendix V.

The Plan will subsequently be adopted by resolution for submittal for approval by King County and DOH.

DOH17: A signed SEPA checklist is a part of the WSP submittal. Provide a signed SEPA Threshold Determination

The SEPA documents are provided in Appendix U including:

- *SEPA checklist, dated January 27, 2019*
- *DNS dated February 19, 2019*
- *Notice of Action dated April 1, 2019*

DOH18: Include any comments from adjacent purveyors and the District's response to those comments.

All comments received on the 2018 Water Comprehensive Plan and District comments are included in Appendix V.

DOH19: Is the District a member of the Washington State Water/Wastewater Agency Response Network (WAWARN)? Federal Emergency Management Agency states prior to reimbursement, they will ask for mutual aid documentation. Becoming a member of WAWARN demonstrates both managerial and financial capacity.

The District is a member of WAWARN, and joined WAWARN per Resolution No. 3798 adopted on May 4, 2009. This is mentioned in Section 6.5.5.

DEPARTMENT OF ECOLOGY

DOE1: Tables 4.14 and 4.15 do not follow standard protocol in presenting the interrelationship between and among the water rights.
The relationship between additive and non-additive being shown based on how portions of water right quantities are split between sources rather than on how they are split within and among different water rights.
While the former may be informative regarding how the District operates its sources, this is not the purpose of the Water Right Self-Assessment, and makes the assessment appear to contain more water rights than have been issued by DOE.
The enclosed table shows Ecology's evaluation of its water rights.

You are correct that the District's organization of information was developed based on operations. It is noted that the non-additive water right for G1-23897C should only be included with Well 11.1 and 11.2, and not with Well 4R to clarify the non-additive rights are not double counted.
Table 4.14 and 4.15 have been updated to be based on each individual water right.

DOE2: Tables 4.14 and 4.15 have errors in the naming convention for water rights numbers.
Beginning in the 1970s, a new water naming protocol was introduced which is based on a single

number being assigned to an application. These numbers are modified to reflect the stage of development by adding an “A”, “P”, “C” or “CL” to the end of the number.
As of the time this comment is being prepared, only one groundwater right held by the District (G1-26572P) remains in permit status (water right being developed), all others are certificated.

The water right naming convention has been corrected in Tables 4.14 and 4.15.

DOE3: Tables 4.14 and 4.15 have errors involving the use of asterisks.
Asterisks indicate that the water right document was originally issued prior to 1970 and that a new number, using the post 1970 protocol has been issued based on the original application number for the water right. An asterisk always follows after the source type and region codes and is separated by a dash.
An example of the correct placement of an asterisk is G1-*09533C, indicates that this water right was initiated through the filing of application 9533 for a groundwater right (“G”) in the NW region of Washington (“1”). The original water right number for pre-1970 issued certificates is often provided as a convenience by DOE, but agency databases are primarily based on the post 1970s number with the asterisk to signify a converted number. DOE’s database can be queried for either number so the use of the older number in the Water Right Self-Assessment table is satisfactory. The original certificates commonly have “-A” at the end of the number, which is not needed in reporting or database queries.

Very informative comment. The District has updated District information in Tables 4.14 and 4.15 to be consistent with the post 1970 numbering.

CITY OF SAMMAMISH

SAM1: (d) Service Area Polices Question 1
Chapter 1, Page 1-37: A map identifying Group B wells locations should be included in this Plan as well as a description of how they are managed.

A map of the Group B wells is provided in Figure 1-7 on page 1-13. Text in the section on Existing Group A and Group B Systems, currently on page 1-37, has been added to direct readers to the map’s location. The District does not have jurisdiction over existing Group B systems.

SAM2: (d) Service Area Polices Question 2
Chapter 1, Page 1-38: Urban Growth Area.

A map showing the District boundary, the boundaries of the Cities of Sammamish, Issaquah and Redmond, and the Urban Growth Area (UGA) Boundary is provided on Figure 1-13, currently on page 1-30. In locations where the city boundaries are coincident with the UGA, the UGA boundary is not visible.

SAM3: (d) Service Area Polices Question 3
Chapter 1, Page 1-38: Please integrate language around plans to sign a Franchise Agreement with the City of Sammamish.

Appendix F, Design Standards, notes the preferred location of water mains is in the right-of-way. The District initiated discussion with Sammamish to negotiate a franchise agreement in March 2017. The District is willing to continue these negotiations. The negotiation of a franchise is noted in Section 1.2.4 Federal, State and Local Regulations.

No changes were made to the Section 1.8 Service Area Policies as this appeared to be better addressed under regulations.

SAM4: (d) Service Area Polices Question 4
Chapter 1, Page 1-38: Drinking Water Quality.

SAM4.a. Describe the District's water quality monitoring program and/or plan for drinking water.

Section 6.4 Comprehensive Monitoring Plan provides a description of the District's water quality monitoring requirements and results. Appendix J includes the District's Drinking Water Quality Policy Statement, Coliform Monitoring Plan, Triggered Ground Water Monitoring Plan, and the Stage 1 Disinfectants and Disinfection Byproducts Rule Identified Treatment Plans and Monitoring Plan. Additionally, the Annual Drinking Water Reports for the last several years are available on the District website.

SAM4.b. Describe how the District addresses DOE mandates for low impact development and the impacts on groundwater. Reference or provide studies that demonstrate any negative impact.

The District is not a land use agency, and as such does not have direct jurisdiction over implementation of LID efforts. However, Chapter 5 identifies the Wellhead Protection Area (WHPA) which is an area within which the District does work to track proposed developments and initiatives that include infiltration and injection to the groundwater. When the District is reviews proposed stormwater injection/infiltration plans, the District may request technical analyses which demonstrate the plan will not pose a risk to degrade the aquifers, which are the District's primary source of drinking water. With respect to studies that District consultants have utilized in the past, one source of data is the International Stormwater Best Management Practices (BMP) Database.

SAM4.c. Describe the District's long-term sustainability plan for aquifer recharge.

Aquifer recharge is just one of the source of supply strategies used by the District. Please refer to Section 4.4 regarding the District's Aquifer Storage and Recovery (ASR) Program for aquifer recharge information. Note that use of ASR requires permits from the Department of Ecology. In addition, Chapter 5, Source Water Protection, provides information on how the District works to protect the groundwater resource.

SAM5: (d) Service Area Polices Question 5
Chapter 1, Page 1-39: Oversizing.

SAM5.a. Provide a reference to a facility plan that shows where oversizing might be necessary.

This information is provided in Chapter 8, Capital Plan. The District considers a main to be "oversized" when transmission of water from source and supply through an area uses a main that is larger than the size required for distribution and fire flow to that same area. There is no single map that indicates where oversizing may be necessary. Information on the size main included for individual projects is listed in Table 8-1, and the location of the projects is provided on Figures 8-1 through 8-4. Descriptions of the individual distribution projects are included in Sections 8.2.6.

SAM5.b. Describe the method for determining and identifying mainlines that may need to be oversized.

The analysis of the water system is described in Chapter 3, System Analysis, with the Distribution System Analysis contained in Section 3.3. The analysis considers the demands on the system during maximum day with fire flow and peak hour conditions.

SAM6: (e) Other relevant elements Question 1
Please indicate how you determine when to bring in or tap into the Cascade Water Alliance (CWA) source. Are there additional costs to do this?

The decision to tap into the CWA source was made in January 1999 when, by Resolution No. 2414, the District made application for membership to the Cascade Water Alliance to assure a continued supply of water. The first time regional water was used in the District's system was 2005. The decision to connect to the CWA source was due, in part, to the difficulty of obtaining additional groundwater water rights to support anticipated customer growth.

There are costs associated with using the CWA source. The District pays annual membership fees and for water supplied from the regional source. In general, water purchased from CWA costs more than water provided from the District's groundwater source. And in addition, per the current agreement for CWA water, the District pays for a certain amount of water whether it is used or not. These annual, ongoing costs for membership and supply are supported by District water rates.

There is also a connection charge called the Regional Capital Facility Charge that the District pays to CWA for each new water meter connected to the District's water system. This charge is collected by the District from each new customer, and passed on to CWA.

SAM7: (e) Other relevant elements Question 2
Questions regarding the CARA Map (Critical Aquifer Recharge Area):

SAM7.a. Please provide your timeline for updating the CARA map.

The Wellhead Protection Areas (CARA 1 and 2) were developed in 1993-1995 for the Issaquah Valley Aquifer, and 1998 for the Plateau and Cascade View Aquifers as noted in Chapter 5.

The District updated the CARA map for the Lower Issaquah Valley Aquifer in 2016. The District reviewed the CARA 1 and 2 boundaries for the Plateau Aquifers most recently in 2007.

SAM7.b. What is the Scope of Work?

There is no current project to update the Wellhead Protection Areas that are reflected in the CARA maps. There is an ongoing modelling effort in the Issaquah Valley Aquifer in conjunction with monitoring of Per- and Polyfluoroalkyl Substances (PFAS) contaminants.

SAM7.c. Please provide any updated policy to the City of Sammamish that may require review and updates to our development regulations.

The District is currently working with City of Sammamish staff to provide a process and policy to support the process for consistent water purveyor review of projects that are proposing to utilize injection/infiltration of storm water. The District's preference is to be notified of any Underground Injection Control (UIC) wells, and any UIC wells that the District identifies that may have a potential impact on the drinking water aquifers will be required to meet a demonstrative approach to ensure the non-endangerment standard for groundwater is met.

SAM7.d. The City would like that the District take ownership of the CARA maps.

The District is the source of the current CARA Zone 1 and Zone 2 areas associated with the District wells, representing the 1, 5 and 10 year Time of Travel in the Wellhead Protection Areas (WHPAs). These are provided to King County, the City of Issaquah and City of Sammamish for inclusion with their CARA mapping. The District does not have information on WHPAs of wells that are not owned and operated by the District, for other Group A systems or for Group B systems. Nor does the District have information or responsibility for development of the CARA Zone 3 area mapping.

SAM8: (e) Other relevant elements Question 3
Table 5-3 page 5-20, Agencies and First Responders: Please add City of Sammamish to the list.

The City of Sammamish has been added to the list of Agencies in Table 5-3. Thank you for bringing this oversight to our attention.

SAM9: (e) Other relevant elements Question 4
Chapter 1, Section 1.7: Is there a need to include a section for the City of Sammamish? While the area is within the Plateau Zone, we do coordinate interlocal agreements (ILA) and we are currently drafting up a Franchise Agreement between the City and SPWSD.

See answer to Comment SAM3. No changes were made to the Section 1.7 Service Area Agreements as those were intended to address specific existing agreements with Water Purveyors.

SAM10: (a) Land Use and Zoning elements Question 1
Chapter 1, Page 1-2, Figure 1-1: Overlapping adjacent services providers needs to be noted on this map or a new map added. A narrative describing the method of resolving conflicts in these overlapping areas also needs to be added.

Figure 1-1 only provides the District's Service Area boundaries. Figure 1-6 provides District and adjacent purveyor boundaries. There are no overlapping water service areas within the City of Sammamish. However, there are areas where the Northeast Sammamish Sewer and Water District provides sewer service within Sammamish Plateau Water's water service area. This not considered a conflict. There is an area where the City of Issaquah provides water service within the District's Current Water Service District Boundary. This area is intended to be de-annexed from the District, as reflected by the District's Future Water Service District Boundary.

SAM11: (a) Land Use and Zoning elements Question 2
Chapter 1, Page 1-2, Figure 1-1: Show the UGA and City boundaries on this map.

A map showing the District boundary, the boundaries of the Cities of Sammamish, Issaquah and Redmond, and the Urban Growth Area (UGA) Boundary is provided on Figure 1-13, currently on page 1-30. In locations where the city boundaries are coincident with the UGA, the UGA boundary is not visible.

SAM12: (a) Land Use and Zoning elements Question 3
Chapter 1, Page 1-26: Describe the PAAs (Evans Creek Preserve Trail, Swan Ridge neighborhood 30-Acres Park, Aldarra Golf Club), Urban Growth Boundary and Town Center sub-area.

Language has been added to Section 1.4 noting three of the four City of Sammamish PAAs are in the District's service area.

SAM13: (a) Land Use and Zoning elements Question 4
Chapter 1, Page 1-26: The moratorium has been repealed, refer to Ordinance O2018-479.

Noted. The text in Section 1.4 has been modified to reflect this update.

SAM14: (a) Land Use and Zoning elements Question 5
Chapter 1, Page 1-26: Sammamish Plans that should be referenced include the following:

a. Sammamish Storm and Surface Water Management Comprehensive Plan
b. Ordinance O2016-424
c. City of Sammamish Town Center Sub-Area
d. Capital Improvement Plans as adopted by the City, Resolution R2016-2022

The plan list on Page 1-26 under Section 1.4 Related Plans, are those Plans that apply to the provision of water service, and is limited to Comprehensive Plans and Water Plans. Information on these supporting plans has been added to Section 1.4.

SAM15: (a) Land Use and Zoning elements Question 6
Chapter 1, Page 1-30, Figure 1-13: The R-4 and R-6 Interim zones are not shown.

Figure 1-13 has been updated to include the interim zone designation for certain R-4 and R-6 zoned properties.

SAM16: (a) Land Use and Zoning elements Question 7

Chapter 1, Page 1-32, Figure 1-14: The City Boundary and UGA line are not shown. The current Water Service District Boundary in south-west Sammamish is not shown (near MacDonald area).

Figure 1-14 is limited to District annexation areas, between the Current Water Service and Future Water Service Boundaries. It is kept limited to allow for clarity purposes. The City Boundary and UGA lines are shown on Figure 1-13.

SAM17: (b) Growth projection elements Question 1

Chapter 2, Page 2-23: Why are the multi-family numbers for Sammamish decreasing starting in 2023?

The multi-family units after 2023 are all included in the Town Center area and are in Mixed Use ERUs. However, these multi-family units were not included in the population figures reported in the draft Plan, and the Population Forecast in Table 2-15 has been updated to include the mixed use residential units. To clarify the multi-family and mixed use average units per ERU, footnote 3 to Table 2-15 has been updated. In addition, Table 2-2, Multi-Family Units Per Connection, has an added column indicating the units per ERU for each meter size, and the average for non-Mixed Use Multi-Family customers.

SAM18: (b) Growth projection elements Question 2

Chapter 2, Page 2-19, Table 2-11: Use one source of data and sort in ascending order. Move year 2040 to the end of the table.

Different sources are provided to indicate that estimates vary, and in particular that the Sammamish Comprehensive Plan 2040 value was almost the same as other's estimates for 2017. The table has been reformatted to put 2040 at the end.

SAM19: (b) Growth projection elements Question 3

Chapter 2, Page 2-21: Stating that population in our area is declining contradicts PSRC current projections that the region needs a plan for 1.8 million additional people and 1.2 million new jobs by 2050. Refer to the Vision 2050 Executive Summary, page ES-1 and the Draft SEIS.

This statement is not meant to imply the population is decreasing, only the population per household. This reduction in PPPH is as provided from the PSRC. The PPPH does decline, and when the new rate is applied, it may appear that the population declines. See table 2-13 for details.

CITY OF ISSAQUAH

ISS1: Provided text modifications to Section 1.4 City of Issaquah's Comprehensive Plan description to reflect updates since the section was originally drafted. (Pages 1-26 and 1-27 in Plan)

Issaquah provided modifications to the text under City of Issaquah Comprehensive Plan in Section 1.4 Related Plans. These modifications have been made.

ISS2: The City's Water System Plan was adopted this year and the language on Page 1-27 could be updated to reflect the planning horizon in the City of Issaquah Plan, 10-years through 2027 and 20-years through 2037.

The text has been updated to reflect completion and adoption of the City of Issaquah's Water System Plan, and planning year horizons.

ISS3: Page 2.20, Table 2-12: Provide updated Issaquah populations from the Issaquah Comprehensive Plan, update 2018, Page LU-26.

City of Issaquah population data presented in Table 2-12 and supporting text has been updated to reflect the Issaquah Comprehensive Plan 2019 update.

SEATTLE PUBLIC UTILITIES

SPU1: Water Quality 1.a.: Referring to Tables 6-15, 6-16 and 6-17 – please explain why some parameters are listed but not analyzed. Also, please confirm that the parameters listed in these three tables are the most current. We recommend that an update be made to Table 6-15 to match the current list of primary and secondary parameters as shown in WAC 245-290-310 and in Tables 6-16 and 6-17 to match the most current federal regulations.

The tables 6-15, 6-16 and 6-17 are intended to provide information on water quality test results obtained by the District from 2009 through 2016. To clarify the table includes only results obtained, the parameters include in Table 6-16 that were not analyzed have been removed. No changes were made to Tables 6-15 or 6-17.

SPU2: Water Quality 1.b.: The results described and presented in Section 6.4 appear to include only sampling conducted at the District's groundwater sources. While wells provide most of the water for the District's customers, the WSP states approximately 20% of water supply is provided through regional connections, which is water provided by SPU. Because customers drink this water as well, a summary of SPU water quality and SPU's compliance with federal and state drinking water regulations should be included in the WSP.

The District does provide customers with a summary of SPU's water quality results in the annual District Water Quality Reports. Additional text has been added to Section 6.4.4 Effective Drinking Water Regulations to clarify that SPU must also meet the water quality regulations, and directing readers to the Annual Water Quality Reports for that summarized information.

SPU3: Water Quality 1.c.: The District participated in sampling for parameters under UCMR1, 2 and3. What parameters were sampled for and were any detections observed?

In UCMR1 the District sampled for 12 parameters at 3 source locations. The results were all "not-detected." In UCMR2 the District sampled for 10 parameters at 7 locations. The results were all "not detected." These results are noted in text additions of Section 6.4.5.6 relating to UCMR1 and UCMR2.

In UCMR3 the District sampled for 28 parameters at 7 source locations and 7 parameters at 5 distribution system locations. There were detections at certain sites for Chromium, Molybdenum, Strontium, Vanadium, Hexavalent Chromium and Chlorate. In addition, there were detections of 2 of the 5 Perfluorinated Compounds (PFAS) in the sources tested located in the Issaquah Valley Aquifer. As noted in Section 6.4.5.6 the PFAS detections were below the minimum reporting level.

Text has been added to Section 6.4.5.6 on the results of the UCMR testing, and a summary of the District results from UCMR3 have been included in Appendix J.

SPU4: Water Quality 1.d.: In Section 6.4.5.1, please clarify the different numbers shown for acceptable detectable chlorine residuals (chlorine residual should be greater than 0.2 mg/L versus 0.01 mg/L). Also clarify which level is used by the District to determine compliance.

For compliance, the District is required to maintain a chlorine residual of 0.2 at each entry point, but only detectable (0.01) in the distribution system. These are the levels used by the District to determine compliance. Please note there are also areas of the District, identified as the Segregated Plateau North End on Figure 1-10, that only receive groundwater.

SPU5: Water Quality 1.e.: On page 6-49, please correct the reference to optimal fluoride level per WAC 246-290-460. The current optimal fluoride level is 0.7 mg/L, not 0.9 mg/L.

Noted. This correction has been made.

SPU6: Water Shortage Contingency Plan (WSCP) 2.a.: SPU updated its WSCP through our most recent WSP. A key change in our newest version is that the Advisory Stage is an internal planning phase only and does not have a public facing component. SPU's March 2018 WSCP can be found here: http://www.seattle.gov/util/Documents/Plans/Water/WaterShortagePlan/index.htm

The change to the SPU WSCP is noted.

CITY OF REDMOND

RED1: Based on the source adequacy evaluation summarized in Table 3-3, the 200 gpm normal operating capacity provided in the Agreement, the Cascade regional supply is sufficient in meeting current and future needs for the Cascade View Zone. If in the future the District has a need for additional water supply or changes need to be made in the provisions of the Interlocal Agreement due to the operational changes of the intertie, an amended agreement should be pursued between the City, Cascade Water Alliance and the District.

The pump pumps at 400 gpm, fixed rate. The Agreement may need to be modified to reflect this usage, but this has been the operating situation since the intertie was installed.

RED2: On Table 4.15 Water Right Self-Assessment, the Maximum Qi for the 10 and 20-year Forecasted Purchase shows 0 gpm. It appears the District will stop using the CWA Northern Regional connection in the future.
Is this information accurately shown or is it due to the annual water production strategy noted in footnote 3 of Table 4.15? In 2017 and 2018, the District purchased more than 34 acre-ft/year through the CWA connection. If the District is anticipating not using the Intertie in the future and terminating the Interlocal Agreement, the termination provisions in 11.2 of the Interlocal Agreement would govern.

The District is not anticipating reducing or terminating use of the intertie. Table 4-15 is an exercise reviewing source adequacy and water rights only, and does not reflect the District's operational strategy.

RED3: On pages 4-61-62, 4.6 Interties: The text indicates the locations of the regional connections are shown on Figure 1-7, which should be referenced as Figures 1-8 and 1-11.

Thank you for noting this correction. The text in Section 4.6 Interties has been updated to reference the correct figures.

RED4: On page 6-9, Table 6-5 (cont.) Major System Components – Supply Sources it states,

> "CWA – North Regional Connection 400 gpm (DOH report) 780 gpm (8" diameter at 5 fps) 200 gpm is the normal operating capacity. Maximum capacity of 400 gpm as needed when the District's two production wells are out of service. (2.4 of Agreement for Water System Intertie between the City of Redmond and SPWSD ("Agreement") dated February 11, 2005.)

If you are just listing the pumping capacity and not what the allowable supply is, then the information is acceptable.

The rate of 780 gpm is the maximum rate that would meet the District's normal operating capacity of an 8-inch main at 5 fps. This is a check whether the rate allowed by the Intertie Agreement, and as reported to DOH, is within the normal operating rate.

RED5: If in the future SPWSD would like to transfer the ownership of the intertie meter to CWA, the Interlocal Agreement with Redmond would need to be updated.

Noted.

NORTHEAST SAMMAMISH SEWER AND WATER DISTRICT

NESSWD1: Thanks for allowing the District *(NESSWD)* the opportunity to review and comment on the SPWSD 2018 Comprehensive Plan. The District has no comments.

Noted.

CARL SCHWARTZ

SCHWARTZ1: Letter received April 15, 2019 requesting information on the status of water supply planning by SPWSD with respect to growth and the increase in population.

Provided a letter in response with information on how to locate the 2018 Water Comprehensive Plan for his review and comment, and specifically directing him to Chapter 2 for growth projections and Chapter 4 for source of supply information.
No further comments were received.