Lake Meridian Water District

2023 Water Comprehensive Plan

April 2023

Lake Meridian
WATER DISTRICT

bhc
CONSULTANTS

THIS PAGE INTENTIONALLY BLANK.

LAKE MERIDIAN WATER DISTRICT

2023 WATER COMPREHENSIVE PLAN

APRIL 2023

Commissioners
Gary C. Cline
Patrick M. Hanis
Charles E. Wilson

Lake Meridian Water District
27224 – 144th Avenue SE
Kent, WA 98042
Telephone: (253) 631-3770

William C. Hall, General Manager
Brent Lewis, Operations Manager

Consulting Engineer
BHC Consultants, LLC
1601 5th Ave, Suite #500
Seattle, Washington 98101
Telephone: (206) 505-3400
Fax: (206) 505-34006

Attorney
Curtis Chambers
Inslee Best

CERTIFICATION

This Water Comprehensive Plan for Lake Meridian Water District was prepared by BHC Consultants, LLC, under the direction of the following Registered Professional Engineers:

04/13/2023

Ronald A. Dorn, PE
BHC Consultants, LLC

04/13/2023

Madison Taylor McCrosky, PE
BHC Consultants, LLC

APPROVAL:

Approved by Washington State Department of Health on _____.

Approved by Lake Meridian Water District Resolution 680-03-23 on March 23, 2023.

TABLE OF CONTENTS

Executive Summary ES-1
ES.1 Introduction ES-1
ES.2 Retail Water Service Area ES-1
ES.3 Land Use and Population ES-1
ES.4 Water Demand ES-5
ES.5 Water System Policies ES-5
ES.6 Water Quality ES-5
ES.7 Hydraulic Analysis ES-6
ES.8 Storage Analysis ES-6
ES.9 Water Use Efficiency ES-7
ES.10 Water Rights ES-7
ES.11 Source of Supply Analysis ES-15
ES.12 Source Protection ES-15
ES.13 Maintenance and Operations ES-15
ES.14 Capital Improvement Program ES-15
ES.15 Financial Analysis ES-16

Chapter 1 Description of Water System 1-1
1.1 Introduction 1-1
1.2 District History 1-1
1.3 Water Service Area 1-3
1.4 Soils and Geography 1-3
1.5 Service Agreements 1-3
1.6 Customers/Inventory of Existing Facilities 1-10
1.6.1 Distribution Piping 1-17
1.6.2 Supply Facilities 1-17
1.6.3 Storage Facilities 1-18
1.7 Adjacent Purveyors and Interties 1-19
1.7.1 Soos Creek Water & Sewer District 1-19
1.7.2 City of Kent 1-20
1.7.3 City of Auburn (Interlocal Agreement No. 1 and Interlocal Agreement No. 2) 1-20
1.7.4 Covington Water District 1-21
1.7.5 Related Plans 1-21

Chapter 2 Basic Planning Data and Water Demand Forecasting 2-1
2.1 Introduction 2-1
2.2 Planning Area 2-1
2.3 Land Use and Zoning 2-1
2.3.1 Existing Zoning 2-1
2.3.2 Future Land Use 2-5
2.4 City Potential Annexation Areas 2-5
2.5 Population and Employment 2-5
2.6 Water Account Projections 2-7
2.7 Water Consumption 2-8
2.7.1 Historical Supply 2-8

2.8 Historical Water Consumption 2-10
2.9 Equivalent Residential Units 2-15
2.10 Diurnal Demand Pattern 2-16
2.11 Future Water Requirements 2-17
2.11.1 Residential 2-17
2.11.2 Commercial/Other 2-17
2.11.3 Distribution System Leakage 2-17
2.11.4 Future Water System Demand 2-17
2.11.5 Climate Change Considerations 2-19
2.11.6 Impacts to Water Supply 2-20
2.11.7 Impacts to Water Usage 2-20

Chapter 3 Policies, Criteria, and Standards 3-1
3.1 Introduction 3-1
3.2 Goals 3-1
3.3 Policies and Criteria Categories 3-2
3.4 Definitions 3-2
3.5 Policies and Criteria 3-2
3.5.1 Customer Service, Service Area, Extension, and Service Ownership 3-2
3.5.2 System Reliability, Security, and Emergency Response Measures 3-9
3.5.3 Fire Protection 3-12
3.5.4 Coordination with Other Agencies 3-14
3.5.5 Water System Planning, Design and Construction 3-15
3.5.6 Environmental Stewardship 3-20
3.5.7 Water Use Efficiency 3-21
3.5.8 Human Resources 3-22

Chapter 4 System Analysis 4-1
4.1 Introduction 4-1
4.2 Water Quality Testing and Monitoring 4-1
4.2.1 History of Water Quality Regulations 4-2
4.2.2 Water Quality Results 4-3
4.2.3 Inorganic Chemicals and Physical Parameters 4-7
4.2.4 Volatile Organic Chemicals (VOCs) and Synthetic Organic Chemicals (SOCs) 4-7
4.2.5 Radionuclides 4-7
4.2.6 Lead and Copper 4-7
4.2.7 Coliform 4-8
4.2.8 Total Trihalomethanes (TTHMs) and Haloacetic Acids (HAA5) 4-13
4.2.9 Asbestos Monitoring 4-13
4.2.10 Unregulated Chemical Monitoring 4-13
4.2.11 Perfluoroalkyl and Polyfluoroalkyl Substances (PFAS) 4-13
4.2.12 Other Substance Monitoring 4-14
4.3 Water Treatment and Filtration 4-14
4.4 Long-Term Water Quality Strategy 4-14
4.4.1 Fluoride 4-15
4.4.2 pH Adjustment 4-15
4.4.3 Future Water Quality Programs 4-15

4.5 Consumer Confidence Report 4-15
4.6 Public Notification for Violations 4-15
4.6.1 Key Contacts 4-15
4.6.2 Treatment Technique Violation (Tier 2) 4-15
4.6.3 *E. coli* Violation (Tier 1) 4-16
4.6.4 Reporting Violation (Tier 3) 4-16
4.6.5 Public Notice Content 4-16
4.6.6 Public Notification Templates 4-17
4.7 Facility Cleaning Plans 4-17
4.7.1 Reservoirs 4-17
4.8 Water Sampling Stand Cleaning Plan 4-17
4.9 Hydraulic Analysis 4-18
4.10 Hydraulic Model 4-18
4.10.1 Pipe Data 4-19
4.10.2 Node Data/System Demands 4-19
4.10.3 Fire Flow Requirements 4-19
4.10.4 Pump Station Data 4-20
4.10.5 Storage Facility Data 4-20
4.10.6 Supply Data 4-23
4.10.7 Model Calibration 4-23
4.11 Evaluation of Distribution System 4-24
4.11.1 2019 System Analysis 4-24
4.11.2 2040 Scenario Analysis 4-33
4.11.3 Storage Analysis 4-39

Chapter 5 Water Use Efficiency 5-1
5.1 History 5-1
5.2 Regulatory Requirements 5-2
5.3 Historical Water Conservation Program 5-3
5.3.1 Historical Water Savings 5-5
5.3.2 Seasonal Water Usage 5-6
5.3.3 Evaluation of Water Use Efficiency Measures 5-6
5.4 2023-2029 Water Use Efficiency Program 5-7
5.4.1 Indoor Residential 5-8
5.4.2 Outdoor 5-8
5.4.3 Industrial/Commercial/Institutional 5-9
5.4.4 Reclaimed Water Analysis 5-9
5.4.5 Summary of Recommended Water Use Efficiency Savings 5-9

Chapter 6 Water Rights, Supply Analysis and Source Water Protection 6-1
6.1 Groundwater Supply Sources 6-1
6.2 Existing Supply Facilities 6-2
6.2.1 Well 1 6-2
6.2.2 Well 2 6-2
6.2.3 Well 3 6-2
6.2.4 Well 4 6-3
6.2.5 Well 5A 6-3

6.2.6 Well 6/6B 6-3
6.2.7 Well 7 6-4
6.2.8 Well 8 6-4
6.2.9 Well 9 6-4
6.3 Water Rights 6-5
6.4 Purchased Water Supply 6-5
6.4.1 Covington Water District 6-5
6.4.2 City of Auburn 6-6
6.4.3 Regional Water Supply System 6-6
6.5 Supply Evaluation 6-7
6.6 Water Supply Strategies 6-8
6.7 Water Reuse 6-8
6.8 Groundwater Management 6-8
6.8.1 Wellhead Protection 6-8
6.9 Purchased Water Management 6-10

Chapter 7 Maintenance and Operations 7-1
7.1 Introduction 7-1
7.2 Management and Operations Responsibility 7-1
7.2.1 Board of Commissioners 7-1
7.3 District Management Team 7-1
7.3.1 General Manager 7-3
7.3.2 Finance Officer 1 7-3
7.3.3 Account Specialist 3 7-3
7.3.4 Financial Administrative Assistant 3 7-3
7.3.5 Operations Manager 3 7-4
7.3.6 Water Service Technician 3 7-4
7.3.7 Water Service Technician 7-4
7.3.8 District Engineering Consultant 7-5
7.3.9 District Attorney 7-5
7.4 Certification Status 7-5
7.5 Professional Development 7-6
7.6 System Operation and Control 7-6
7.6.1 Systems Operations and Maintenance Program 7-6
7.6.2 System Control 7-8
7.7 Routine Preventative Maintenance 7-9
7.7.1 Daily Facility Maintenance 7-9
7.7.2 Weekly Facility Maintenance 7-9
7.7.3 Bi-Monthly Facility Maintenance 7-9
7.7.4 Monthly Facility Maintenance 7-9
7.7.5 Annual Facility Maintenance 7-10
7.7.6 Reservoir Inspection and Maintenance 7-10
7.7.7 Water Quality Testing 7-10
7.8 Equipment, Supplies and Treatment Chemical Inventory 7-11
7.8.1 Equipment 7-11
7.8.2 Supplies 7-11
7.8.3 Treatment Chemicals 7-11

7.9 Water Quality Monitoring 7-12
7.9.1 Sampling Procedures 7-12
7.9.2 Violations Procedures 7-12
7.10 Emergency Response Program 7-12
7.10.1 Emergency Call-Up List 7-13
7.10.2 Vulnerability Assessment 7-13
7.10.3 Hazard Mitigation Plan 7-14
7.11 Safety Procedures 7-14
7.12 Cross-Connection Control Program 7-14
7.13 Customer Concern Response Program 7-15
7.14 Record Keeping and Reporting 7-15
7.15 Operation and Maintenance Improvements 7-16

Chapter 8 Capital Improvement Program 8-1
8.1 Capital Improvement Program Description 8-1
8.2 Capital Improvement Projects 8-1
8.3 Cost Estimate Methodology 8-2
8.4 Water Main Replacements and Extensions 8-3
8.4.1 AC Main Replacement Program 8-3
8.4.2 Summary of Replacement and Extension Projects 8-3
8.5 Loop Closure Program (No. 23) 8-7
8.6 Miscellaneous Capital Projects 8-7
8.6.1 AC Pipe/Service Line Study (No. 65) 8-7
8.6.2 GIS/Asset Management Project Phase 2 (No. 75) 8-7
8.7 New Pressure Zones 8-8
8.7.1 New 625 Pressure Zone 2 (No. 76) 8-8
8.7.2 New 616 Pressure Zone 3 (No. 77) 8-9
8.7.3 New 630 Pressure Zone 4 (No. 78) 8-9
8.7.4 New 635 Pressure Zone 5 (No. 79) 8-9
8.8 Inter-Local Agreements/Interties, Studies 8-10
8.9 Tanks/Reservoirs 8-11
8.9.1 Update VFD for 1300 Tank (No. 91) 8-11
8.9.2 New Water Tank T1400 (No. 79) 8-11
8.10 Summary 8-12

Chapter 9 Financial Analysis 9-1
9.1 Introduction 9-1
9.2 Financial History 9-1
9.3 Capital Funding Resources 9-3
9.3.1 Government Programs 9-3
9.3.2 Debt Financing 9-3
9.4 Current Revenue 9-4
9.4.1 Financial Policies 9-4
9.4.2 Revenue Requirement 9-6
9.4.3 Current and Projected Rates 9-10

List of Tables

Table ES-1 Population and Employment Projections ES-2
Table ES-2 Existing and Projected Demands (MGD) ES-5
Table ES-3 2040 Storage Analysis ES-6
Table ES-4 10 Year CIP Summary ES-16
Table ES-5 Projected Financial Performance & Revenue Requirements ($000s) ES-17

Table 1-1 Existing Service Agreements 1-9
Table 1-2 Inventoried Pipe Materials and Lengths Material 1-17
Table 1-3 Inventory of the District's Wells 1-18
Table 1-4 Reservoirs 1-18
Table 1-5 Adjacent Purveyors and Interties 1-19

Table 2-1 Population and Employment Projections 2-6
Table 2-2 Number of Existing and Projected Accounts 2-7
Table 2-3 Historical Annual Water Produced and Purchased (MG) 2-9
Table 2-4 Historical Annual Water Produced and Purchased and Demand 2-10
Table 2-5 Distribution System Leakage (MG) 2-11
Table 2-6 Consumer Class by Bill Code 2-12
Table 2-7 Daily Total Usage by Consumer Class 2-13
Table 2-8 2019 Water Consumption and ERUs 2-16
Table 2-9 Unit Water Demands 2-17
Table 2-10 Existing and Projected Average, Maximum, and Peak Daily Demands by Category (MGD) 2-18
Table 2-11 Existing and Projected Demands (MGD) 2-19
Table 2-12 Climate Change Impacts – Annual Average West of the Cascades – CMIP6 2-20

Table 4-1 Regulatory Rules and Effective Dates 4-3
Table 4-2 2019 Consumer Confidence Report Lake Meridian Water District Contaminants 4-4
Table 4-3 Bacteriological Monitoring Locations 4-9
Table 4-4 Tank Location and Cleaning Plan 4-17
Table 4-5 2019 Storage Analysis 4-44
Table 4-6 2030 Storage Analysis 4-48
Table 4-7 2040 Storage Analysis 4-51
Table 4-8 2040 Storage Analysis with WUE 4-51

Table 5-1 Summary of Historical Water Use Efficiency Program 5-3
Table 5-2 Actual Average Day Demand by Customer Class 5-5
Table 5-3 Summary of Water Demand Forecast (MGD) 5-9
Table 5-4 Total Demand (MG) 5-10

Table 6-1 Supply Analysis 6-7

Table 7-1 Motor Vehicles and Equipment 7-11
Table 7-2 Treatment Chemicals 7-11

Table 8-1 Pipe Replacement Unit Cost 8-3

Table 8-2 Water Main Replacement or Extension 0-10 Years 8-4
Table 8-3 Water Main Replacement or Extension 10-20 Years 8-5
Table 8-4 Water Main Replacement or Extension for Fire Flow Velocity Deficiency Projects 8-6
Table 8-5 Miscellaneous Capital Improvement Projects 8-8
Table 8-6 New Pressure Zones 8-10
Table 8-7 Inter-local Agreements / Interties, Studies 8-11
Table 8-8 Tanks and Water Supply 8-12
Table 8-9 10 Year CIP Summary 8-13
Table 8-10 System Improvement Plan 8-21

Table 9-1 Historical Financial Performance (2016 – 2021) 9-1
Table 9-2 Capital Improvement Program ($000s) 9-7
Table 9-3 Projected Financial Performance & Revenue Requirements ($000s) 9-11
Table 9-4 Residential Water Rate Forecast (Excluding Kent Franchise Fee) 9-12
Table 9-5 Non-Residential Water Rate Forecast *(Excluding Kent Franchise Fee)* 9-12
Table 9-6 Affordability Evaluation 9-13

List of Figures

Figure ES-1 Water Service Area Boundaries ES-3
Figure ES-2 Existing Minimum System Pressures ES-9
Figure ES-3 Existing Fire Flow Deficiencies ES-11
Figure ES-4 2040 Scenario with Improvements Minimum System Pressure ES-13

Figure 1-1 Vicinity Map 1-5
Figure 1-2 Water Service Area Boundaries 1-7
Figure 1-3 Existing Water System Facilities 1-11
Figure 1-4 Hydraulic Profile 1-13
Figure 1-5 Future Hydraulic Profile 1-15

Figure 2-1 Zoning Map 2-3
Figure 2-2 Annual Water Purchased and Produced 2-8
Figure 2-3 Monthly Well Water Production & Purchase 2019 2-9
Figure 2-4 Average Water Use by Consumer Class (2017-2019) 2-12
Figure 2-5 Diurnal Demand Pattern 2-16

Figure 4-1 Bacteriological Monitoring Locations 4-11
Figure 4-2 Topography 4-21
Figure 4-3 Existing Minimum System Pressures 4-27
Figure 4-4 Existing Maximum System Pressures 4-29
Figure 4-5 Fire Flow Requirements 4-31
Figure 4-6 Existing Fire Flow Deficiencies 4-35
Figure 4-7 2040 Scenario with Improvements - Minimum System Pressure 4-37
Figure 4-8 2040 Scenario with Improvements - Maximum System Pressure 4-41
Figure 4-9 2019 Storage Analysis Tank Schematics 4-45
Figure 4-10 Proposed Pressure Zones 4-49

Figure 5-1 Proposed and Historical Water Demand per ERU 5-2
Figure 5-2 Monthly Consumption by Consumer Class 5-6
Figure 5-3 2019 Average Yearly Water Use by WUE Evaluation Category 5-7

Figure 7-1 Organization Chart 7-2

Figure 8-1 Capital Improvement Projects – Water Main Replacement or Extension 8-17
Figure 8-2 AC Material Pipes 8-19

List of Appendices

Appendix A SEPA Checklist and DNS
Appendix B Comments and Responses
Appendix C Approvals
Appendix D Service Agreements
Appendix E Developer Extension Agreement
Appendix F Standard Specifications & Policy Statement Standard Details
Appendix G Population Analysis
Appendix H Water Quality Test Results
Appendix I Coliform Monitoring Plan 2019
Appendix J Cross Connection Control Plan
Appendix K WFI Form
Appendix L Water Rights
Appendix M Combined Hazard Inventory
Appendix N Water Produced and Purchased
Appendix O Satellite Management Policy
Appendix P WUE
Appendix Q Disinfection Byproducts Plan
Appendix R Blending Study
Appendix S Calibration
Appendix T Lake Meridian Water District Water Rate Model
Appendix U Funding Program Summary

Abbreviations and Acronyms List

AC	Asbestos Cement
ADD	Average Daily Demand
AL	Action Level
APWA	American Public Works Association
AWIA	American Water Infrastructure Act
AWWA	American Water Works Association
BHC	BHC Consultants, LLC
BMP	Best Management Practices
B&O	Business & Occupation
BPS	Booster Pump Stations
CCR	Consumer Confidence Report
CEU	Continuing Education Units
CERB	Community Economic Revitalization Board
CFC	Capital Facilities Charges
CI	Cast Iron
CIP	Capital Improvement Program
CMIP	Coupled Model Intercomparison Project
CMU	Concrete Unit Masonry
Confluence	Confluence Engineering Group, LLC
County	King County
Covington	Covington Water District
CPR	Conservation Planning Requirements
CWA	Certificates of Water Availability
CWD	Covington Water District
CWSP	Coordinated Water System Plan
CWSSA	Critical Water Supply Service Area
DEA	Developer Extension Agreement
DI	Ductile Iron
District	Lake Meridian Water District
DOH	Washington State Department of Health
DSL	Distribution System Leakage
DWSRF	Drinking Water State Revolving Fund
Ecology	Washington State Department of Ecology
ENR	Engineering News Record
EPA	Environmental Protection Agency
EPS	Extended Period Simulations

ERU	Equivalent Residential Unit
ES	Equalizing Storage
ESA	Endangered Species Act
FSS	Fire Suppression Storage
ft	Feet/Foot
GIS	Geographic Information System
GMA	Growth Management Act
gpd	Gallons per Day
gpm	Gallons per Minute
HAA5	Haloacetic Acids
HAL	Health Advisory Level
HDPE	High Density Polyethylene
IA	Interlocal Agreement
ICS	Incident Command System
IGEA	Investment-Grade Efficiency Audit
in	Inch(es)
IOC	Inorganic Chemicals
JOA	Joint Operating Agreement
KC Plan	King County Comprehensive Plan
Kent Plan	City of Kent Comprehensive Plan
LF	Linear Feet
LCR	Lead and Copper Rule
LUV	Land Use Vision
MCL	Maximum Contaminant Level
MCLG	Maximum Contaminant Level Goal
MDD	Maximum Day Demand
MG	Million Gallon
MGD	Million Gallons per Day
mg/l	Milligrams per Liter
MHI	Median Household Income
MRDL	Maximum Residual Disinfection Level
MRDLG	Maximum Residual Disinfection Level Goal
MSL	Mean Sea Level
MTTP	Maximum Total Trihalomethane Potential
NOAA	National Oceanic and Atmospheric Administration
O&M	Operation and Maintenance
OS	Operational Storage
PAA	Potential Annexation Area

PFAS	Perfluoroalkyl and Polyfluoroalkyl Substances
PHD	Peak Hour Demand
Plan	Water Comprehensive Plan
PLC	Programable Logic Controllers
ppb	Parts per Billion
ppm	Parts per Million
PRV	Pressure Reducing Valve
psi	Pounds per Square Inch
PSRC	Puget Sound Regional Council
PVC	Polyvinyl Chloride
PWTF	Public Works Trust Fund
RCW	Revised Code of Washington
RTCR	Revised Total Coliform Rule
RWSA	Retail Water Service Area
RWSS	Regional Water System Supply
SAL	State Action Level
SB	Standby Storage
SCADA	Supervisory Control and Data Acquisition
SDWA	Safe Drinking Water Act
SEPA	State Environmental Policy Act
SKCRWA	South King County Regional Water Association
SOC	Synthetic Organic Chemical
Soos Creek	Soos Creek Water & Sewer District
SSP	Shared Socioeconomic Pathway
TAZ	Transportation Analysis Zones
TCR	Total Coliform Rule
THM	Trihalomethanes
TSSP	Tacoma Second Supply Project
TT	Treatment Technique
TTHM	Total Trihalomethanes
ULID	Utility Local Improvement District
UW-CIG	University of Washington Climate Impact Group
VOC	Volatile Organic Chemical
WAC	Washington Administrative Code
WASWD	Washington State Association of Sewer and Water Districts
WCRP	World Climate Research Programme
WETRC	Washington Environmental Training Resource Center
WFI	Water Facility Inventory

WHP	Wellhead Protection
WHPA	Wellhead Protection Area
WHPP	Wellhead Protection Plans
WRIA	Water Resources Inventory Areas
WSDOT	Washington State Department of Transportation
WSP	Water System Plan
WUE	Water Use Efficiency

Executive Summary

ES.1 Introduction

This Water Comprehensive Plan (Plan) has been prepared in accordance with the Washington Administrative Code (WAC), Chapter 246-290-100. These regulations have recently been revised to require that the Plan be updated every ten years to evaluate the system and define an improvement program to meet the District's needs throughout the planning period. This Plan supersedes the District's 2007 Water Comprehensive Plan, approved by the Washington State Department of Health (DOH) in May 2009.

The Board of Commissioners, recognizing the obligation to provide for the needs of its present and future customers, has directed BHC Consultants, LLC (BHC), to analyze and prepare this Plan; it has been prepared in compliance with the applicable State laws and King County regulations. BHC teamed with Confluence Engineering Group, LLC (Confluence) to prepare the Blending Study (Appendix R) and FCS Group to prepare the Financial Analysis (Chapter 9). This Plan complies with the requirements of the State Environmental Policy Act (SEPA) (Chapter 43.21C RCW). A copy of the SEPA Determination can be found in Appendix A.

The District is a Group A public water system; the Department of Health (DOH) Identification Number is 41900B. The District is a special purpose district with three (3) elected commissioners. The type of ownership defined by DOH is a local government, owner number 135. The current Water Facility Inventory (WFI) Form is included in Appendix K.

ES.2 Retail Water Service Area

The District service area, history, and service area agreements are described in Chapter 1. The planning area for this Plan consists of the District's water service area, as generally established by the South King County Coordinated Water System Plan (CWSP). The Retail Water Service Area (RWSA) for the District is consistent with the CWSP and is shown in Figure ES-1. The RWSA encompasses nearly 4,550 acres (approximately 7 square miles) and covers portions of the City of Auburn, the City of Kent, City of Covington, and unincorporated King County.

ES.3 Land Use and Population

Land use, zoning, population and employment forecasts and current and future water use are described in Chapter 2. Generally, land use within the water service area is urban/suburban with some commercial use. The southwest and the northeast portions of the service area are generally more rural and sparsely populated. Lake Meridian is in the center of the service area with commercial areas east and west of the lake. The rest of the area is comprised of urban/suburban residential parcels.

Current and projected population and employment are summarized in Table ES-1.

Table ES-1
Population and Employment Projections

Year	Population	Employment
2019	21,988	3,503
2020	21,979	3,503
2021	22,183	3,504
2022	22,387	3,504
2023	22,591	3,505
2024	22,795	3,505
2025	22,999	3,506
2026	23,117	3,521
2027	23,236	3,566
2028	23,354	3,633
2029	23,473	2,907
2030	23,591	3,582
2035	23,964	3,743
2040	24,370	3,904

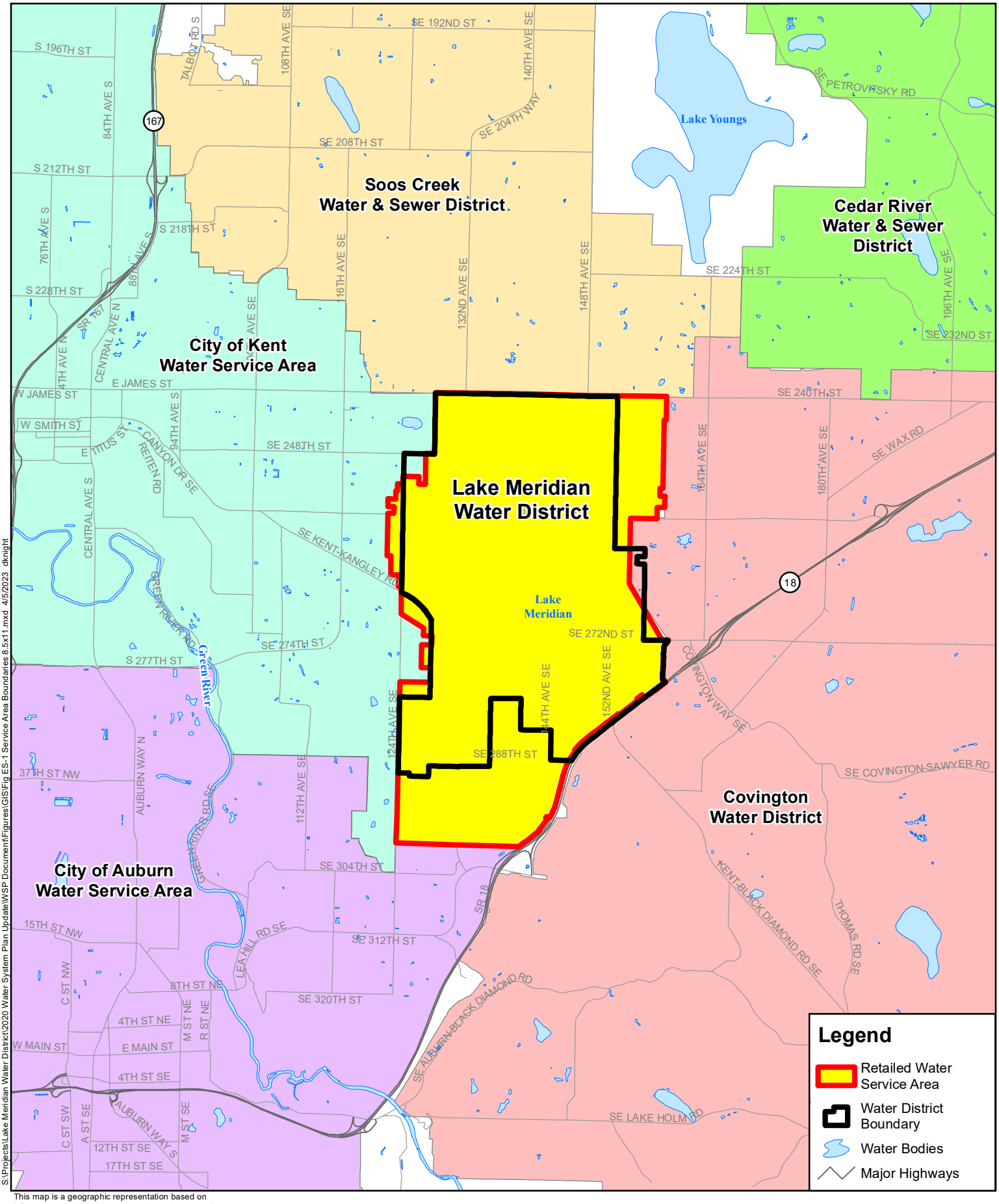

S:\Projects\Lake Meridian Water District\2020 Water System Plan Update\WSP Document\Figures\GIS\Fig ES-1 Service Area Boundaries 8.5x11.mxd 4/5/2023 dknight

This map is a geographic representation based on information available. No warranty is made concerning the accuracy, currency, or completeness of data depicted on this map.

bhc CONSULTANTS

0 0.5 1 Miles

N

Lake Meridian WATER DISTRICT

Water Service Area Boundaries

2023 Water System Plan Update
Lake Meridian Water District
April 2023

Figure
ES-1

COPYRIGHT © 2023 BHC CONSULTANTS LLC. ALL RIGHTS RESERVED

THIS PAGE INTENTIONALLY BLANK.

ES.4 Water Demand

Existing water demand was determined from District metering records. This data was analyzed and water demand per capita and water demand per employee were determined. Projected population and per capita water demand were used to project residential water demand. Projected employment and per employee water demand were used to project commercial/other water demand. Distribution System Leakage (DSL) was estimated as a percentage of the overall water demand. In 2019, DSL was approximately 7.8% of total water purchased or produced. A DSL percentage of 10% is used for future water demand projections. Using the above information resulted in the projected water demands shown in Table ES-2, shown without water use efficiency.

Table ES-2
Existing and Projected Demands (MGD)

Year	ADD (MGD)	MDD (MGD)	PHD (MGD)	Total Demand (MG)	ERUs
2019	1.63	2.93	4.31	595	8,978
2020	1.63	2.93	4.31	595	8,975
2021	1.64	2.96	4.35	600	9,049
2022	1.66	2.98	4.38	604	9,123
2023	1.67	3.00	4.42	609	9,197
2024	1.68	3.03	4.45	614	9,272
2025	1.70	3.05	4.49	619	9,346
2026	1.70	3.07	4.51	622	9,393
2027	1.71	3.08	4.53	625	9,440
2028	1.72	3.10	4.56	629	9,488
2029	1.73	3.12	4.58	632	9,535
2030	1.74	3.13	4.60	635	9,582
2040	1.81	3.25	4.78	660	9,957

ES.5 Water System Policies

Water system policies, analysis and design criteria, and design and construction standards are described in Chapter 3. These policies and criteria are in accordance with Department of Health regulation and other applicable regulations and design and construction standards established by the District.

ES.6 Water Quality

The District's water quality testing results are summarized in Chapter 4. Well water produced by the District is treated to remove iron and manganese and then disinfected with chlorine. The water is also fluoridated to provide protection of teeth. Purchased water is also disinfected with chlorine and fluoridated. Each year, the District summarizes the water quality provided to its customers in a Consumer Confidence Report (CCR). The latest CCR distributed by the District documents that the District is in compliance with all applicable water quality regulations.

ES.7 Hydraulic Analysis

A computer-based hydraulic analysis program was used to evaluate the system hydraulics, determine system deficiencies, and to define required system improvements. This hydraulic analysis is summarized in Chapter 4. Since it has been more than a decade since the computer model was calibrated to field conditions, DOH required the District to recalibrate the model as part of this Water Comprehensive Plan update. The model calibration procedures, results, and model adjustments are summarized in Appendix S.

The hydraulic analysis evaluated system pressures during peak flow conditions as well as fire flows throughout the system superimposed on the maximum day demand (MDD). Fire flows analyzed were 1,000 gpm for single family residential properties and 3,000 gpm for commercial properties. The model results are illustrated as shown Figure ES-2 and Figure ES-3 for 2019 water demands and Figure ES-4 for projected 2040 water demands. No additional fire flow improvements are needed for 2040 beyond those needed for 2019 water demands.

ES.8 Storage Analysis

The storage analysis of the District's three (3) water tanks is summarized in Chapter 4. There are four (4) storage components required to be provided by the District. These are as follows:

- Operational Storage (OS): Storage provided between well pump on and well pump off set points.
- Equalizing Storage (ES): Storage provided to meet peak water demands when wells or other sources are providing average daily demands. Equalizing storage is withdrawn during periods of peak demand and refilled during periods of lower demand.
- Fire Suppression Storage (FSS): Volume of water needed to meet fire flow demand of 1,000 gpm for 2 hours or 3,000 gpm for 3 hours.
- Standby Storage (SB): Storage provided to meet average water demands during emergency conditions when sources of supply may be out of service.

The storage component requirements and the ability to meet those requirements are summarized in Table ES-3. Note that in the 2040 scenario, tank T1100 will have been demolished and a new tank T1400 will have been constructed at a new site.

Table ES-3
2040 Storage Analysis

Tank	Dead Storage (MG)	Operational Storage (MG)	Equalizing Storage (MG)	Standby Storage (MG)	Fire Flow Storage (MG)	Total Required (MG)	Total Effective Capacity (MG)	Surplus (MG)
T1200	0.97	0.35	0.00	0.00	0.00	0.35	1.03	0.68
T1300	0.00	0.00	0.08	0.81	0.00	0.90	2.00	1.10
T1400	1.02	0.09	0.13	1.22	0.54	1.97	1.98	0.00
Total	1.99	0.44	0.21	2.03	0.54	3.22	5.01	1.78

ES.9 Water Use Efficiency

Water use efficiency, also known as water conservation, is summarized in Chapter 5. The District first adopted a conservation program in 1997. Between 1997 and 2019, the District achieved a reduction from 255 gpd/ERU to 172 gpd/ERU. This represents a reduction of about 1.5% per year. For this 20-year planning period, the District has adopted a water use efficiency goal of maintaining a 3-year average water use of 180 gpd/ERU. The measures adopted by the District to achieve this goal are shown in Chapter 5.

ES.10 Water Rights

Groundwater rights issued to the District are summarized in Chapter 6. The District currently has four (4) active wells (Wells 3, 5A, 6, and 9) and three (3) wells placed in emergency status (Wells 1, 2, and 4). The holds certified water rights to annually withdraw a total of 2,204 acre-feet (1.97 MGD) of groundwater with a maximum instantaneous withdrawal of 1,925 gpm (2.77 MGD). These values were confirmed during the 1996 Stipulation and Agreed Order of Dismissal between the District and the Department of Ecology.

THIS PAGE INTENTIONALLY BLANK.

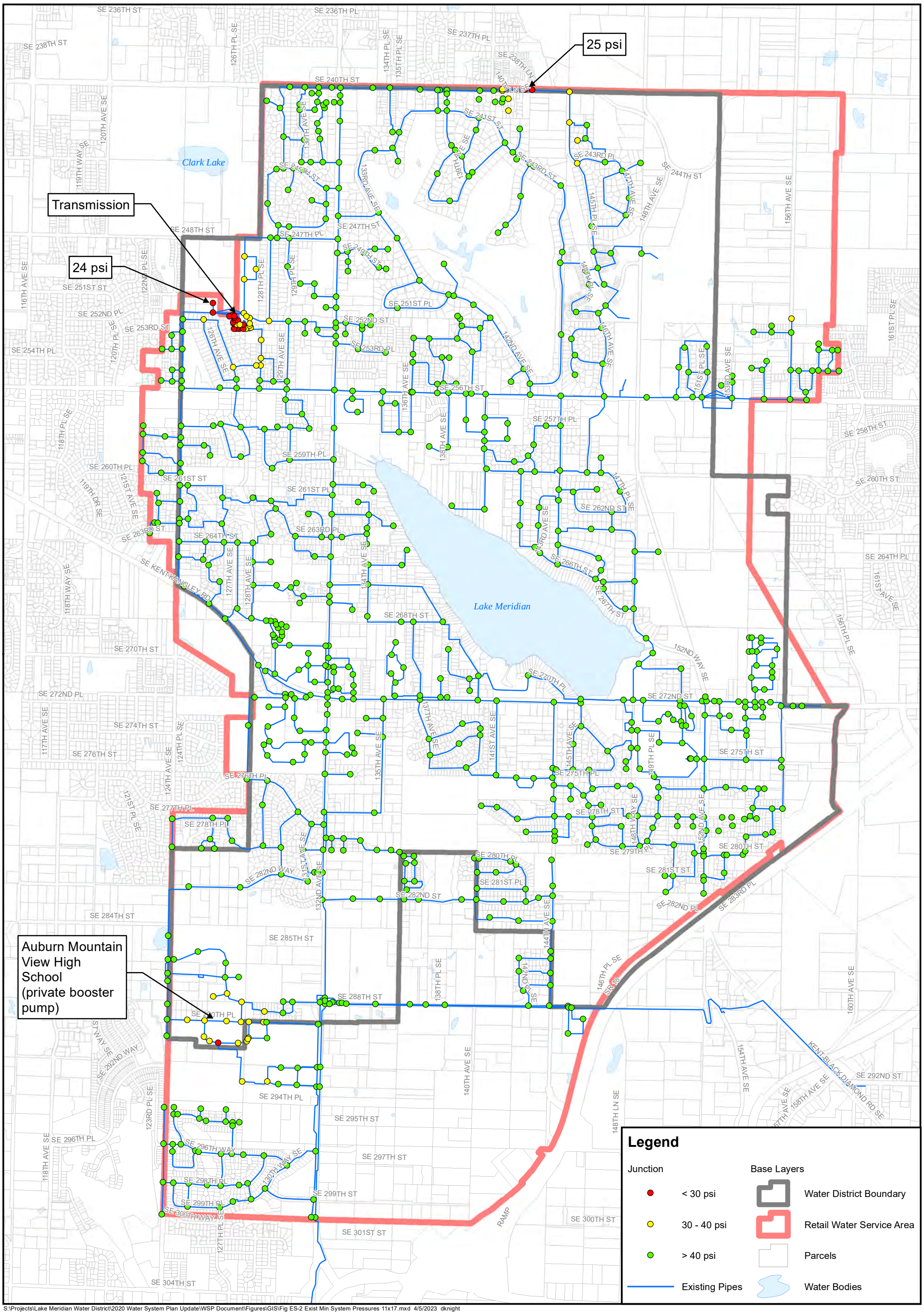

S:\Projects\Lake Meridian Water District\2020 Water System Plan Update\WSP Document\Figures\GIS\Fig ES-2 Exist Min System Pressures 11x17.mxd 4/5/2023 dknight

King County GIS base data.
Data sources supplied may not reflect current or actual conditions. This map is a geographic representation based on available information. It does not represent survey data. No warranty is made concerning the accuracy, currency, or completeness of data depicted on this map.
BHC Consultants LLC., assumes no responsibility for the validity of any information presented herein, nor any responsibility for the use or misuse of the data.

0 750 1,500 Feet

N

Existing Minimum System Pressures
2023 Water System Plan Update
Lake Meridian Water District
April 2023

Figure
ES-2

COPYRIGHT © 2023 BHC CONSULTANTS LLC. ALL RIGHTS RESERVED

THIS PAGE INTENTIONALLY BLANK.

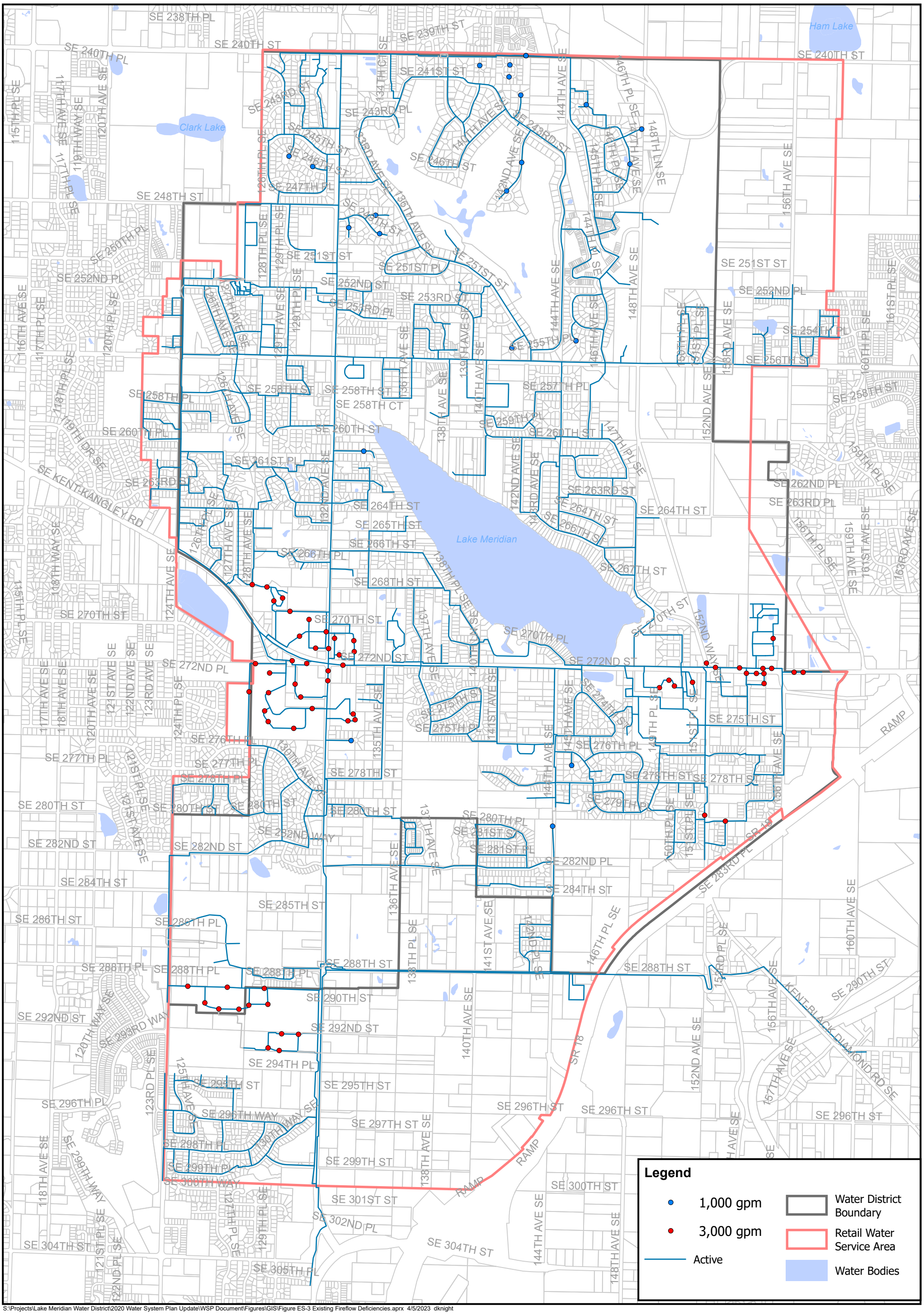

S:\Projects\Lake Meridian Water District\2020 Water System Plan Update\WSP Document\Figures\GIS\Figure ES-3 Existing Fireflow Deficiencies.aprx 4/5/2023 dknight

King County GIS base data.
Data sources supplied may not reflect current or actual conditions. This map is a geographic representation based on available information. It does not represent survey data. No warranty is made concerning the accuracy, currency, or completeness of data depicted on this map.
BHC Consultants LLC., assumes no responsibility for the validity of any information presented herein, nor any responsibility for the use or misuse of the data.

bhc CONSULTANTS

0 750 1,500 Feet

N

Lake Meridian WATER DISTRICT

Existing Fire Flow Deficiencies

2023 Water System Plan Update
Lake Meridian Water District
April 2023

Figure
ES-3

COPYRIGHT © 2023 BHC CONSULTANTS LLC. ALL RIGHTS RESERVED

THIS PAGE INTENTIONALLY BLANK.

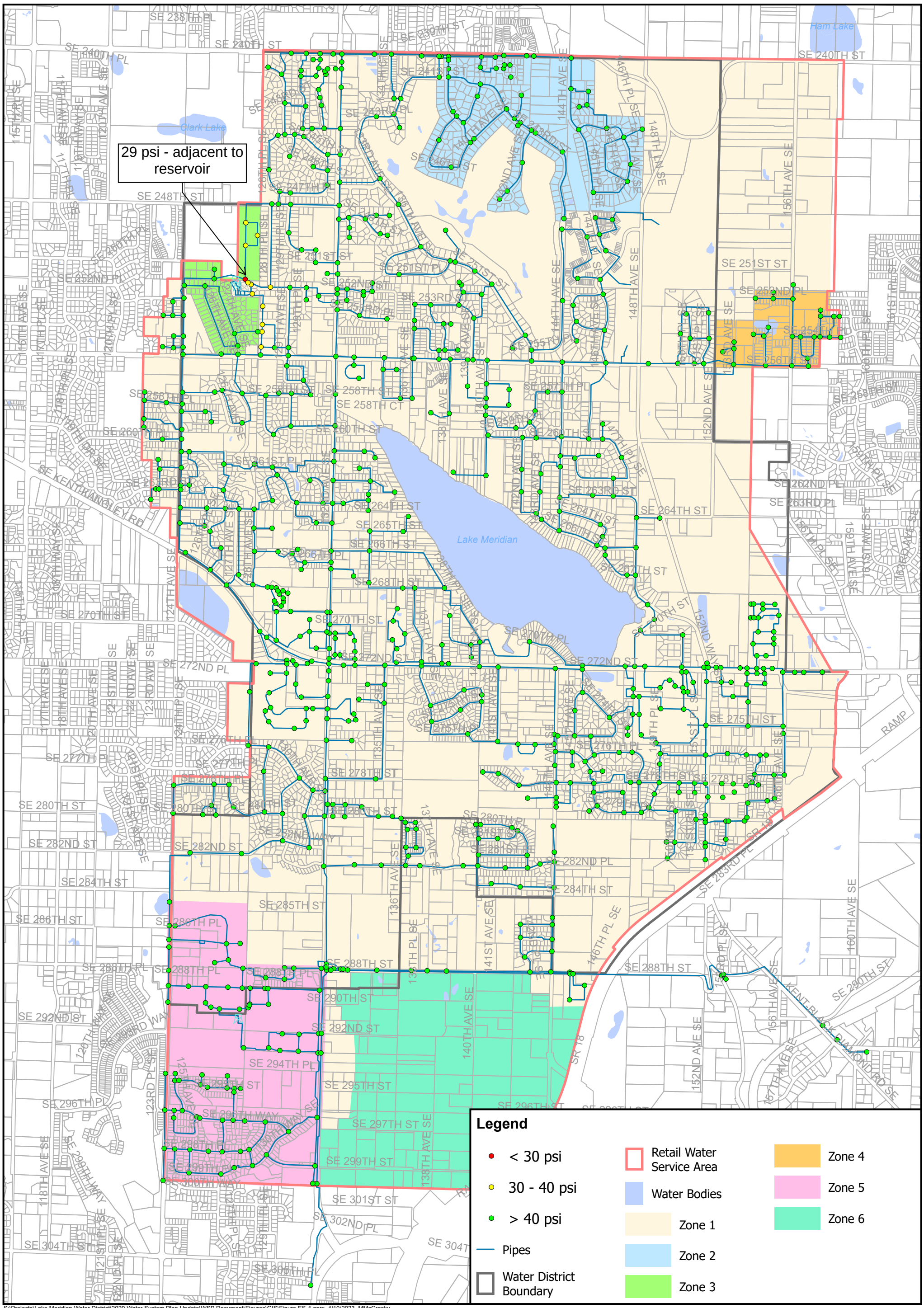

S:\Projects\Lake Meridian Water District\2020 Water System Plan Update\WSP Document\Figures\GIS\Figure ES-4.aprx 4/10/2023 MMcCrosky

King County GIS base data.
Data sources supplied may not reflect current or actual conditions. This map is a geographic representation based on available information. It does not represent survey data. No warranty is made concerning the accuracy, currency, or completeness of data depicted on this map.
BHC Consultants LLC., assumes no responsibility for the validity of any information presented herein, nor any responsibility for the use or misuse of the data.

0 750 1,500 Feet

N

2040 Scenario with Improvements
Minimum System Pressure

2023 Water System Plan Update
Lake Meridian Water District
April 2023

Figure
ES-4

COPYRIGHT © 2021 BHC CONSULTANTS LLC. ALL RIGHTS RESERVED

THIS PAGE INTENTIONALLY BLANK.

ES.11 Source of Supply Analysis

The source of supply analysis is summarized Chapter 6. In addition to the groundwater wells, the District also purchases water from Covington Water District, City of Auburn, and the Regional Water Supply System (RWSS). Starting January 1, 2017, the District began purchasing from Covington a minimum of 750,000 gpd up to a maximum of 1,000,000 gpd of water between October 1st through May 31st. Between June 1st and September 30th, the District has agreed to purchase a minimum of 1,000,000 gpd and up to a maximum of 1,200,000 gpd of water.

The total maximum instantaneous water supply (Qi) with the largest source out of service is from all sources is 6.67 MGD. The projected 2040 maximum day demand is 3.25 MGD. The total maximum annual volume (Qa) with the largest source out of service is 5.38 MGD. The projected 2040 average day demand is 1.81 MGD. In both cases, the District's existing water supplies are sufficient for the projected 2040 water demands.

ES.12 Source Protection

Source protection for the District's water supplies is summarized in Chapter 6. The District has implemented a Well Head Protection Plan (WHPP) for the District's wells. A copy of the plan is available at the District offices. The most recent Hazard Inventory Report was completed in 2005 and is included in Appendix M.

Source protection for water purchased from Covington, Auburn, or the RWSS is provided by the source agency, either Covington, Auburn, or the Tacoma.

ES.13 Maintenance and Operations

The District's Maintenance and Operations program was updated for this comprehensive plan and is summarized in Chapter 7.

ES.14 Capital Improvement Program

Development of the District's Capital Improvement Program (CIP) is summarized in Chapter 8. The CIP projects are divided into three (3) categories:

- 10-year CIP: Those projects recommended for the initial 10 years of the plan.
- 20-year Projects: Additional projects recommended in the 20-year planning period.
- Long-Term: Additional projects recommended from completion that are not tied to a specific schedule and are not required within the planning period.

The 10-year CIP projects are summarized in Table ES-4. The remaining projects are listed in Chapter 8.

Table ES-4
10 Year CIP Summary

CIP No.	Project Location	Proposed Dia. (in)	Length (ft)	Total Project Cost	Year
R16D	148th - 152nd to 268th	12	760	$304,000	2029
R16E	Lk Meridian Park loop	12	550	$220,000	2029
R22A	132 - 240th to 256	12	5,230	$2,092,000	2031
R24A	132nd - 256th to 263rd	12	2,350	$1,012,000	2031
R24B	132nd - 263rd to 270th	12	2,100	$840,000	2031
R29A	132nd - 272nd to 278th	12	1,990	$796,000	2031
R29B	SE 272 - 131st to 132nd	12	370	$148,000	2031
R30A	138th Pl - 269 to end	8	1,160	$464,000	2029
R30B	SE 266 - 134th to 138th Pl	8	910	$364,000	2029
R30C	SE 267 - 138th Pl to end	8	320	$128,000	2029
R30D	SE 268 -138th Pl to 137th	8	520	$208,000	2029
R30E	135th - 266th to end	8	200	$80,000	2029
R44A	Alpine Vista/152/148th	8	1,200	$480,000	2029
107.037	254th Intertie w/Covington	8	1,200	$400,000	2022-2023
ST 1	Miscellaneous AC Main Asset Replacement	NA	NA	$1,050,000	2023, 2026-2031
R50A	SE 256th - 124th Ave	12	559	$223,400	2025-2026
ST 2	"Loop closures" from developers	NA	NS	$100,000	Ongoing
		TOTALS	18,860	$8,430,620	

ES.15 Financial Analysis

The financial analysis developed by FCS Group, including historical performance and projected future rates and costs are summarized in Chapter 9. Projected finances for the District, including income and expenditures, are summarized in Table ES-5.

Table ES-5
Projected Financial Performance & Revenue Requirements ($000s)

	2022	2023	2024	2025	2026	2027	2028	2029	2030	2031
Revenue										
Rate Revenue at 2022 Rates	$4,600	$4,652	$4,674	$4,696	$4,718	$4,740	$4,762	$4,784	$4,806	$4,827
Other Operating Revenues	479	434	435	459	477	497	500	503	512	514
Total Revenues	$5,079	$5,086	$5,110	$5,155	$5,195	$5,237	$5,262	$5,287	$5,318	$5,342
Expenses										
Cash Operating Expenses	$4,174	$4,220	$4,368	$4,495	$4,653	$4,788	$4,957	$5,102	$5,284	$5,440
Debt Service	435	226	1,158	1,159	1,094	1,096	1,093	1,493	1,489	1,396
System Reinvestment	350	350	242	267	408	411	698	723	732	844
Total Expenses	$4,959	$4,796	$5,768	$5,921	$6,155	$6,295	$6,748	$7,318	$7,505	$7,680
Net Operating Cash Flow	$120	$290	$(658)	$(766)	$(960)	$(1,058)	$(1,485)	$(2,031)	$(2,187)	$(2,338)
Annual Rate Adjustment	*5.00%*	*6.00%*	*6.00%*	*6.00%*	*6.00%*	*6.00%*	*4.50%*	*4.00%*	*4.00%*	*4.00%*
After Rate Increases										
Rate Revenues	$4,600	$4,932	$5,252	$5,593	$5,956	$6,343	$6,659	$6,957	$7,269	$7,594
Net Operating Cash Flow	$120	$539	$(142)	$35	$146	$374	$209	$(90)	$13	$132
Debt Service Coverage	4.33	17.73	1.80	2.08	2.23	2.45	2.59	1.90	2.02	2.30
Projected Ending Balances										
Operating Fund	$1,029	$1,041	$899	$934	$1,079	$1,181	$1,223	$1,133	$1,146	$1,278
Construction Fund	6,414	4,797	10,797	3,493	1,245	1,735	2,530	6,165	6,689	1,412
Total	$7,443	$5,838	$11,696	$4,427	$2,324	$2,916	$3,753	$7,298	$7,835	$2,690
Target (180 Days of O&M)	*$2,058*	*$2,081*	*$2,154*	*$2,216*	*$2,294*	*$2,361*	*$2,445*	*$2,516*	*$2,606*	*$2,683*

THIS PAGE INTENTIONALLY BLANK.

Chapter 1 Description of Water System

1.1 Introduction

This Water Comprehensive Plan (Plan) has been prepared in accordance with the Washington Administrative Code (WAC), Chapter 246-290-100. These regulations were recently changed to require that the Plan be updated every ten (10) years at a minimum. Each plan update must evaluate the system and define an improvement program to meet Lake Meridian Water District's (District) needs throughout the planning period. This Plan supersedes the District's 2007 Water Comprehensive Plan, approved by the Washington State Department of Health (DOH) in May 2009. An amendment was added to the Plan in 2016 when the District added an intertie with Covington Water District. Department of Health approval of the May 2009 Plan expired in May 2016.

The Board of Commissioners, recognizing the obligation to provide for the needs of its present and future customers, has directed BHC Consultants, LLC (BHC), to analyze and prepare this Plan; it has been prepared in compliance with the applicable State laws and King County regulations. BHC teamed with Confluence Engineering Group, LLC (Confluence) to prepare the Blending Study (Appendix R) and FCS Group to prepare the Financial Analysis (Chapter 9). This Plan complies with the requirements of the State Environmental Policy Act (SEPA) (Chapter 43.21C RCW). A copy of the SEPA Determination can be found in Appendix A.

The District is a Group A public water system; the Department of Health (DOH) Identification Number is 41900B. The District is a special purpose district with three (3) elected commissioners. The type of ownership defined by DOH is a local government, owner number 135. The current Water Facility Inventory (WFI) Form is included in Appendix K.

1.2 District History

The District was formed in the mid-1960s. Its formation was necessitated by the demand for a public water system to serve high growth areas around Lake Meridian and along Kent-Kangley Road. Private wells and water systems in these areas were having difficulty providing water of adequate quality and quantity.

From the time of the District's formation until the early 1980s, the City of Kent was the District's sole source of water supply. Due to significant increases in the cost of purchasing water from the City of Kent, the potential that Kent would not have water available for the District, and the resources to fund improvements, the District decided in 1980 to develop an independent water supply. As a result of this decision, the District developed its own groundwater supply.

In 1985, the King County Council ordered a "Preliminary Assessment" of the County's water supply and fire protection systems. The Preliminary Assessment identified several concerns regarding the ability of some water utilities to provide safe, efficient, and reliable water service. As a result, on December 15, 1985, South King County, including the area encompassed by the District, was declared a "Critical Water Supply Service Area" (CWSSA) by the King County Council, pursuant to Chapter 70.116 RCW, at the request of the South King County Regional Water Association (SKCRWA) and by its individual members. This declaration invoked legislation (WAC 248-56) that requires, among other things, all affected parties to coordinate their planning and construction programs with the other water utilities and local governments in the same geographic area.

In response to this mandate, a "South King County Coordinated Water System Plan" (CWSP) was completed in October 1989 by the following water utilities: Covington Water District; Federal Way Water and Sewer District (currently known as Lakehaven Utility District); Water District No. 54; King County Water District No. 111; and the Cities of Kent, Auburn, Algona, Pacific, Black Diamond, Milton, and Enumclaw. The CWSP presented a regional assessment of the water supply needs in South King County and outlines the programs to meet those needs.

The District received notice in early 1996 that the Department of Ecology denied applications for water rights on two (2) existing wells and one (1) future well. The District entered into negotiations with the Department of Ecology and the Muckleshoot Indian Tribe. As a result of the negotiations, the District decided to withdraw its appeal of the denial of its applications for water rights.

The District currently owns nine (9) wells. Four (4) wells are actively used, three (3) remain in stand-by status, and two (2) are used as monitoring wells. The District's supply sources, including the above-mentioned wells, are discussed in more detail in Chapter 6.

In 1996, significant changes were initiated in the District's water supply system. The District and Covington Water District signed the Interlocal Agreement No. 2 with the City of Auburn. This agreement provides for a joint water supply development project between the three parties. Originally, the District and Covington Water District (Covington) each purchased 2.5 million gallons per day (MGD) from the City of Auburn. However, in 2010 the Covington Water District chose not to renew their contract.

In 2003, the District entered into a contract with the City of Tacoma for additional water supply. The contract allows for the District to purchase 1.2 MGD for average day use, 1.4 MGD for a peak-day use and 1.33 MGD for a four-day average peak use. Additional water may be purchased on a short-term basis from Tacoma in excess of the amounts stated if the water is available and at Tacoma's sole discretion.

An Emergency Water Supply Agreement was entered into between the District and Covington in September 2015. This agreement is not affected by the Wholesale Supply of Water agreement entered into by the two parties in December 2015.

The District and Covington signed a Wholesale Water Supply Agreement in December 2015. Starting January 1, 2017, the District discontinued purchasing water from Auburn and is now instead supplied with Covington water. This agreement states that between October 1st through May 31st, Covington will supply the District with a minimum of 750,000 gpd up to a maximum of 1,000,000 gpd. The District also purchases a minimum of 1,000,000 gpd up to a maximum of 1,200,000 gpd between June 1st and September 30th. This agreement included the District's purchase of several water supply facilities and pipes as described in the water service agreement included in Appendix D.

The District has been a charter member of the East King County Regional Water Association since 2014 and an active member of the Washington Association of Sewer and Water Districts.

On January 1, 2019, the District changed their name from "King County Water District No. 111" to "Lake Meridian Water District."

1.3 Water Service Area

The location of the District relative to adjacent jurisdictions is shown on Figure 1-1.

The District's service area is currently within the existing planning area of the South King County CWSP. The RWSA for the District is consistent with the CWSP and is shown in Figure 1-2. A smaller area is also shown in Figure 1-2 that reflects the District's current annexed corporate boundary. Areas outside the corporate boundary, but within the RWSA can be provided service per the District's policies as discussed in Chapter 3. The RWSA encompasses nearly 4,550 acres (approximately 7 square miles) and covers portions of the cities of Auburn, Kent, and Covington and a portion of unincorporated King County. Most of the unincorporated portion is designated as Potential Annexation Areas (PAAs) for the cities of Kent and Covington. The PAAs are discussed further in Chapter 2. The City of Kent recently changed its service boundary, affecting the District's boundary as well. Figure 1-2 shows the new boundary.

1.4 Soils and Geography

The Soos Creek Plateau, on which the District is located, is part of the Puget Lowlands. These lowlands are a hilly glacial drift plain covered with small ridges and rounded hills formed by glaciations. The ridges and hills rise less than 200 feet above the plain with lakes and peat bogs filling many of the depressions. Lake Meridian is centrally located in the District. The lake is bounded by a King County Park and, as such, is a local center for recreation and aesthetic enjoyment. Soos Creek borders the District on its eastern boundary. Soos Creek is also bounded by extensive park land and a recreational area. Clark Lake is in the northwest part of the District. It is a small lake with limited access and is not extensively used for recreation.

The geology of the District is largely the result of prehistoric glacial activity and subsequent ice retreats. The United States Department of Agriculture in the Soil Survey of King County has mapped and analyzed the soils in the area. The most common soil type in the area is known as the Alderwood series, which includes moderately well drained gravelly sandy loams that are 24 to 40 inches deep over consolidated glacial till. The next most common type, but much less prevalent than the Alderwood series, is the Everett series. Everett soils are gravelly and are underlain by sand and gravel. In certain areas, principally basins and lowlands, organic materials such as peat and muck occur in depths up to 10 feet.

1.5 Service Agreements

The District is surrounded by several water purveyors including Soos Creek Water & Sewer District to the north, Covington Water District to the east and southeast, Auburn to the south and southwest, and Kent to the west as shown in Figure 1-1. The District has several service agreements with adjacent water districts; many of these are listed in Table 1-1. Copies of the agreements can be found in Appendix D.

As of the writing of this plan, the District is currently finalizing a service area boundary adjustment with the City of Kent in the northwest corner of the District. Draft agreements are included in Appendix D.

THIS PAGE INTENTIONALLY BLANK.

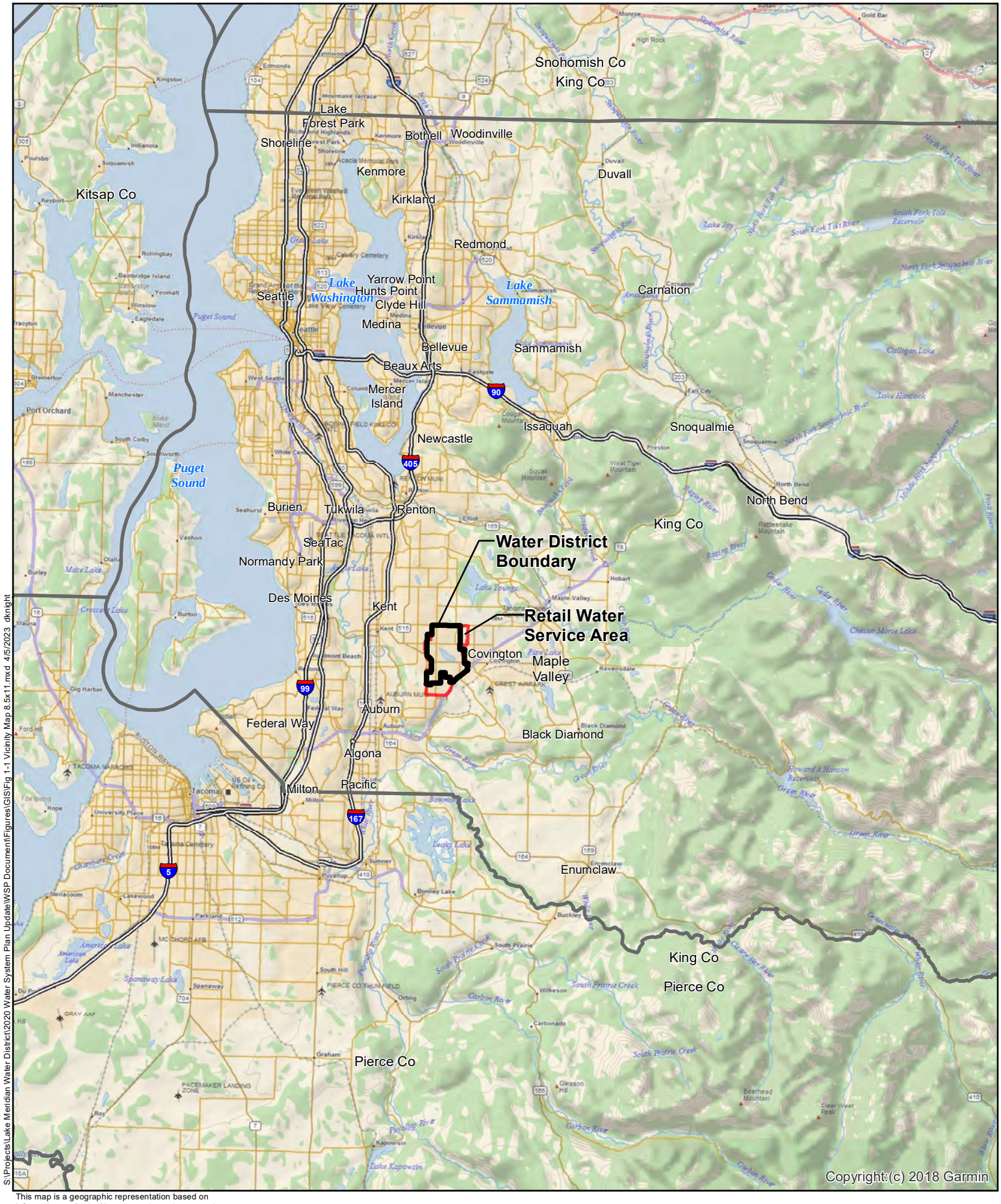

S:\Projects\Lake Meridian Water District\2020 Water System Plan Update\WSP Document\Figures\GIS\Fig 1-1 Vicinity Map 8.5x11.mxd 4/5/2023 dknight

This map is a geographic representation based on information available. No warranty is made concerning the accuracy, currency, or completeness of data depicted on this map.

bhc CONSULTANTS

0 3 6 Miles

N

Lake Meridian WATER DISTRICT

Vicinity Map

2023 Water System Plan Update
Lake Meridian Water District
April 2023

Figure 1-1

COPYRIGHT © 2023 BHC CONSULTANTS LLC. ALL RIGHTS RESERVED

THIS PAGE INTENTIONALLY BLANK.

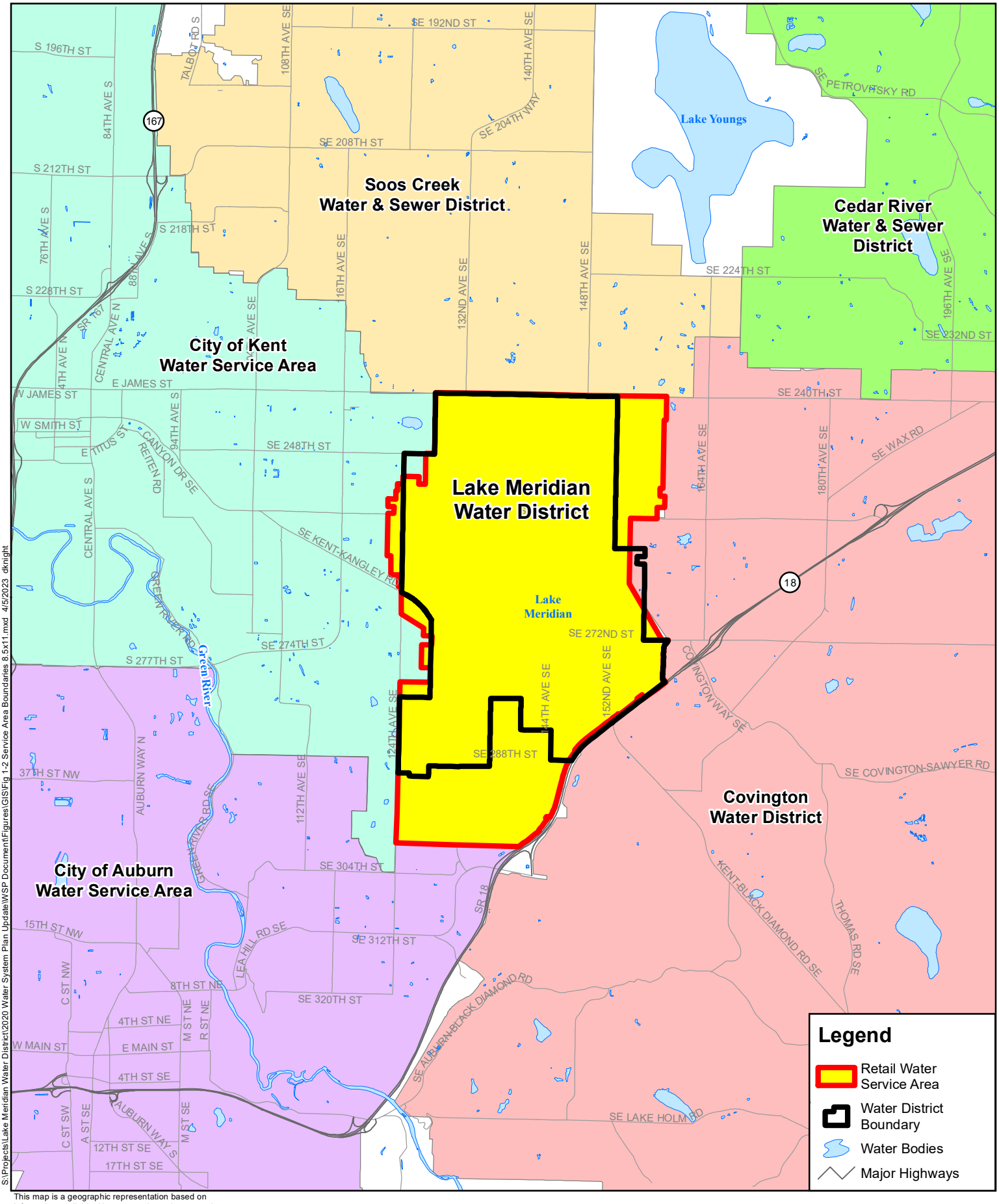

S:\Projects\Lake Meridian Water District\2020 Water System Plan Update\WSP Document\Figures\GIS\Fig 1-2 Service Area Boundaries 8.5x11.mxd 4/5/2023 dknight

This map is a geographic representation based on information available. No warranty is made concerning the accuracy, currency, or completeness of data depicted on this map.

bhc CONSULTANTS

0 0.5 1 Miles

N

Lake Meridian WATER DISTRICT

Water Service Area Boundaries

2023 Water System Plan Update
Lake Meridian Water District
April 2023

Figure 1-2

COPYRIGHT © 2023 BHC CONSULTANTS LLC. ALL RIGHTS RESERVED

THIS PAGE INTENTIONALLY BLANK.

Table 1-1
Existing Service Agreements

Jurisdiction	Date of Agreement	Resolution No.	Purpose
City of Auburn	October 26, 1978	131-10-78	Water Service Area Agreement Amendment
City of Auburn	November 9, 1978	127-8-78	Water Service Area Agreement
City of Auburn	October 23, 1980	157-10-80	Water Service Area Agreement Amend.
City of Auburn	December 15, 1980	1165	Water Service Area Agreement
City of Auburn	November 7, 1995		Interlocal Agreement No. 1 for the 132nd Ave. SE Interim Intertie Project
City of Auburn	September 3, 1996		Interlocal Agreement No. 2 for the Lea Hill Intertie Project
City of Auburn	February 22, 2005		Pay/Take Agreement
City of Auburn and City of Kent	September 5, 2006		Water Service Area Agreement
City of Kent	March 20, 1962		Sale of Water Agreement
City of Kent	July 15, 1966		Amending Sale of Water Agreement
City of Kent	December 17, 1973		Amending Sale of Water Agreement
City of Kent	July 15, 1974		Providing water service to Chorak Square, Div. 1 and 2
City of Kent	August 23, 1978		Water Service Area Agreement
City of Kent	December 5, 1978		Agreement for Joint Maintenance and Operation of Water Storage Facility
City of Kent	June 23, 1983		Easthill Watermain Operations Contract
City of Kent	November 21, 1983		Sale of Water Agreement
City of Kent	June 1, 1986		Sale of Water Agreement
City of Kent	May 27, 1997		Agreement for Construction of System Facilities
City of Kent	June 30, 1997		Watermain Operations Contract
City of Kent	March 16, 1999	3447	Franchise Agreement
City of Kent	April 4, 2017	617-05-17	Franchise Agreement

Table 1 1
Existing Service Agreements (Cont.)

Jurisdiction	Date of Agreement	Resolution No.	Purpose
City of Kent	Pending	-	Modify Retail Water Service Area – Clark Lake Area
City of Tacoma	January 1, 2003	27024	Wholesale Water Agreement
Covington Water District	August 23, 1978		Water Service Area Agreement
Covington Water District	September 27, 1979	141-9-79	Water Service Area Agreement
Covington Water District	October 13, 1988	227-10-88	Modify Water Service Area Agreement
Covington Water District	September 3, 2015	594-07-15	Emergency Water Supply Agreement
Covington Water District	December 29, 2015	596-12-15	Wholesale Supply of Water
Soos Creek Water & Sewer District	November 14, 1978 November 27, 1978	1743	Water Service Area Agreement
Soos Creek Water & Sewer District	June 8, 1995		Emergency System Intertie
South King County Regional Water Association	November 4, 1996		Joint Operating Agreement
Water Sewer Risk Management Pool	February 26, 1996		Mutual Aid Agreement

Notes:
1) Covington Water District was formerly known as Water District 105.
2) Soos Creek Water & Sewer District was formerly known as Water District 58.

1.6 Customers/Inventory of Existing Facilities

As of December 2019, the District had 5,992 meters in the following customer types: Single-family Residential, Multi-family Residential, Commercial, Irrigation, Fire Protection, and Non-Billed Consumption. Refer to Chapter 2 for a breakdown by customer type.

The District's facilities are in good condition. The most recent sanitary survey by DOH confirmed "No Significant sanitary deficiencies were noted during the survey and the facilities were found to be well maintained." The existing major water system facilities are shown on Figure 1-3. Figure 1-4 shows the existing system hydraulic profile, while Figure 1-5 shows the proposed future hydraulic profile. Additions to the system shown in Figure 1-5 are described in further detail in Chapter 4.

The District agreed to purchase existing water system facilities from Covington as part of their new water supply agreement. The facilities include an existing concrete meter vault, interior 8-inch ductile iron piping, interior flow meter, telemetry, and electrical equipment, as well as 21 linear feet of 8-inch ductile iron water line, along with valves, fittings, and all appurtenances. This ownership went into effect January 1, 2017.

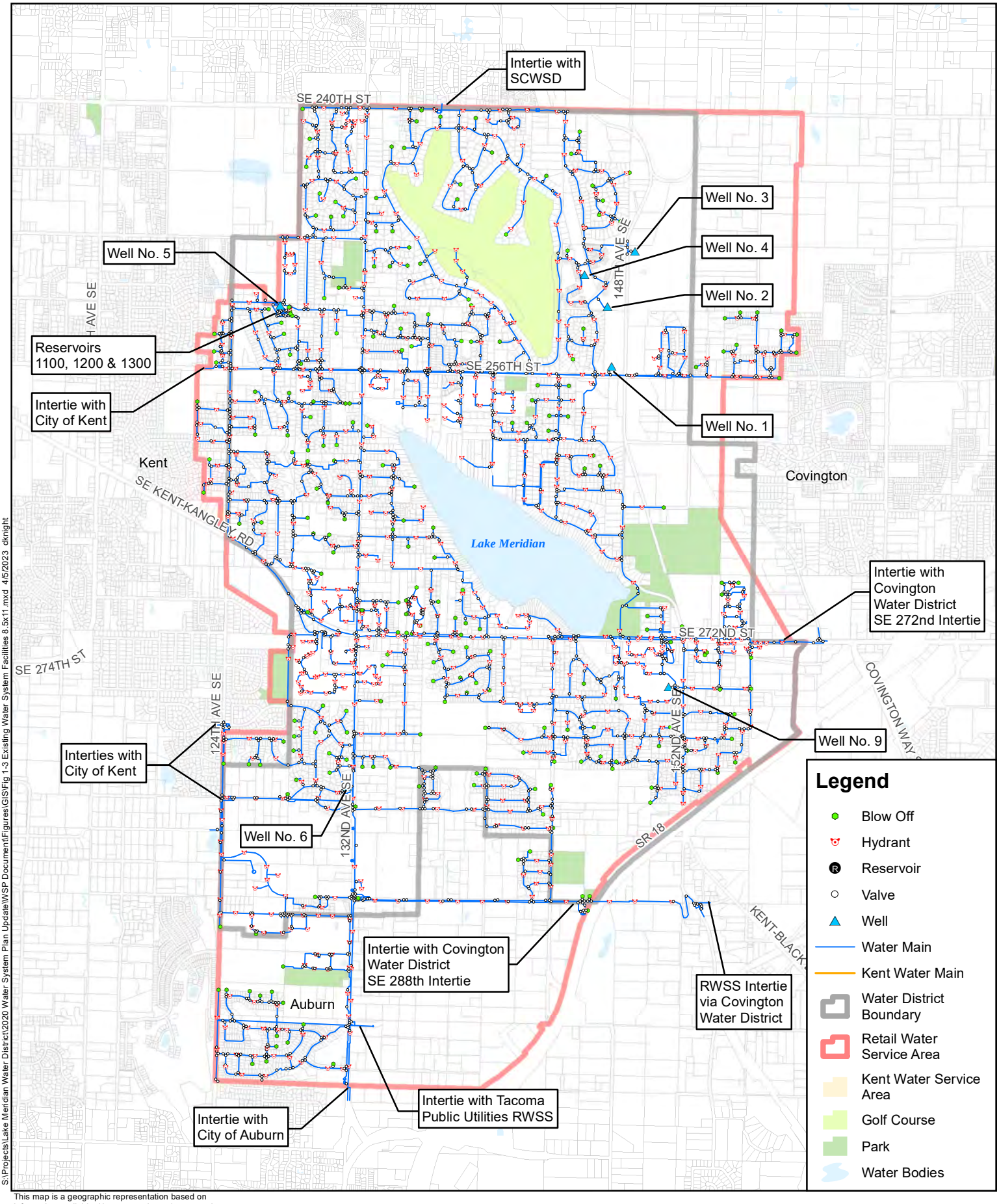

S:\Projects\Lake Meridian Water District\2020 Water System Plan Update\WSP Document\Figures\GIS\Fig 1-3 Existing Water System Facilities 8.5x11.mxd 4/5/2023 dknight

This map is a geographic representation based on information available. No warranty is made concerning the accuracy, currency, or completeness of data depicted on this map.

0 1,250 2,500 Feet

N

Existing Water System Facilities

2023 Water System Plan Update
Lake Meridian Water District
April 2023

Figure 1-3

COPYRIGHT © 2023 BHC CONSULTANTS LLC. ALL RIGHTS RESERVED

THIS PAGE INTENTIONALLY BLANK.

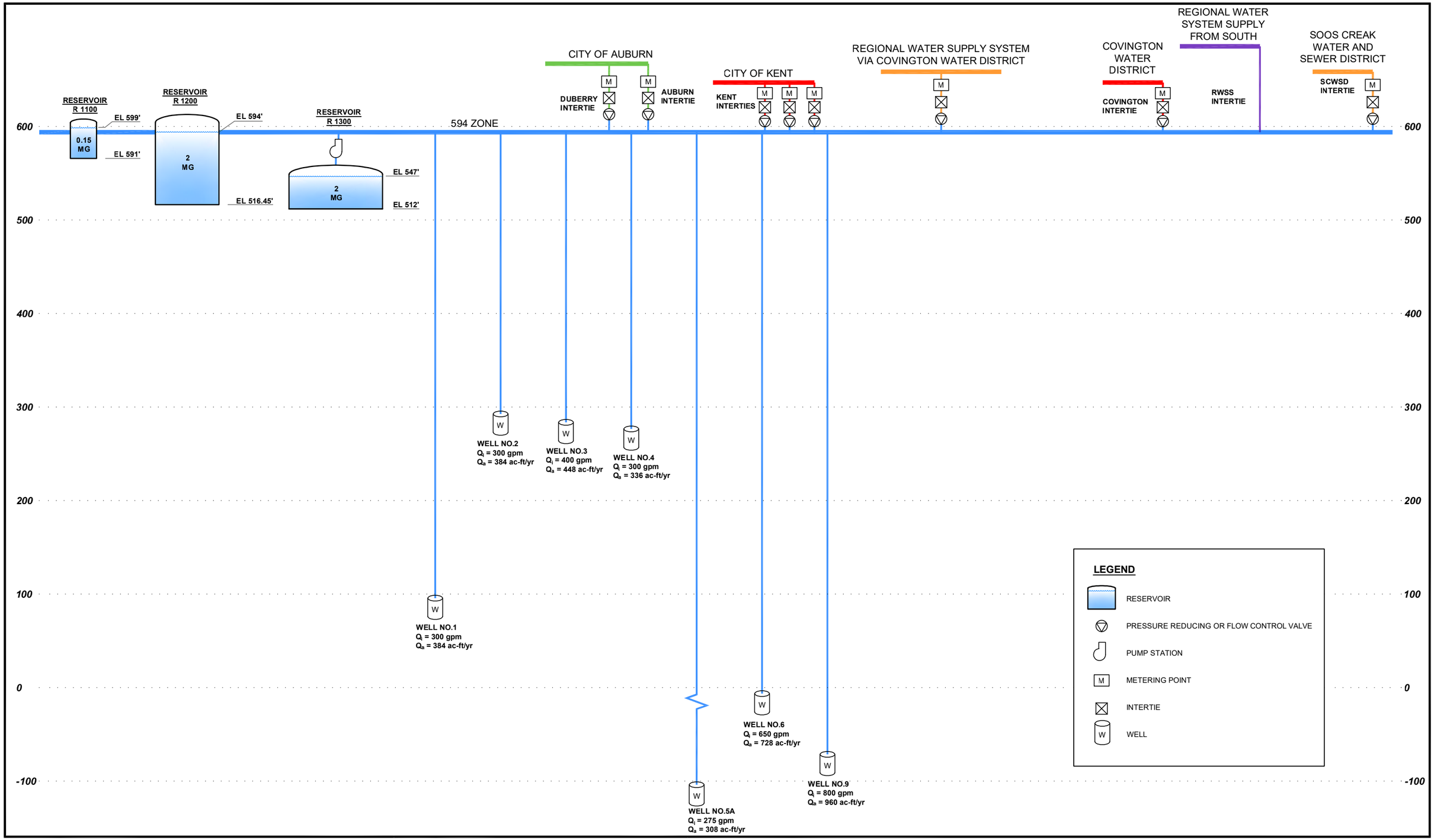

Path: S:\Cad\Lake Meridian WD\15-10043 Water Sys Plan\ Filename: F15-10043_F-1.4 Plot date: Mar 27, 2023-03:58:55pm CAD User: RNicolas.
Xref Filename: |

bhc CONSULTANTS

Lake Meridian WATER DISTRICT

Hydraulic Profile

2023 Water System Plan Update
Lake Meridian Water District
April 2023

Figure

1-4

COPYRIGHT © 2023 BHC CONSULTANTS, LLC. ALL RIGHTS RESERVED

THIS PAGE INTENTIONALLY BLANK.

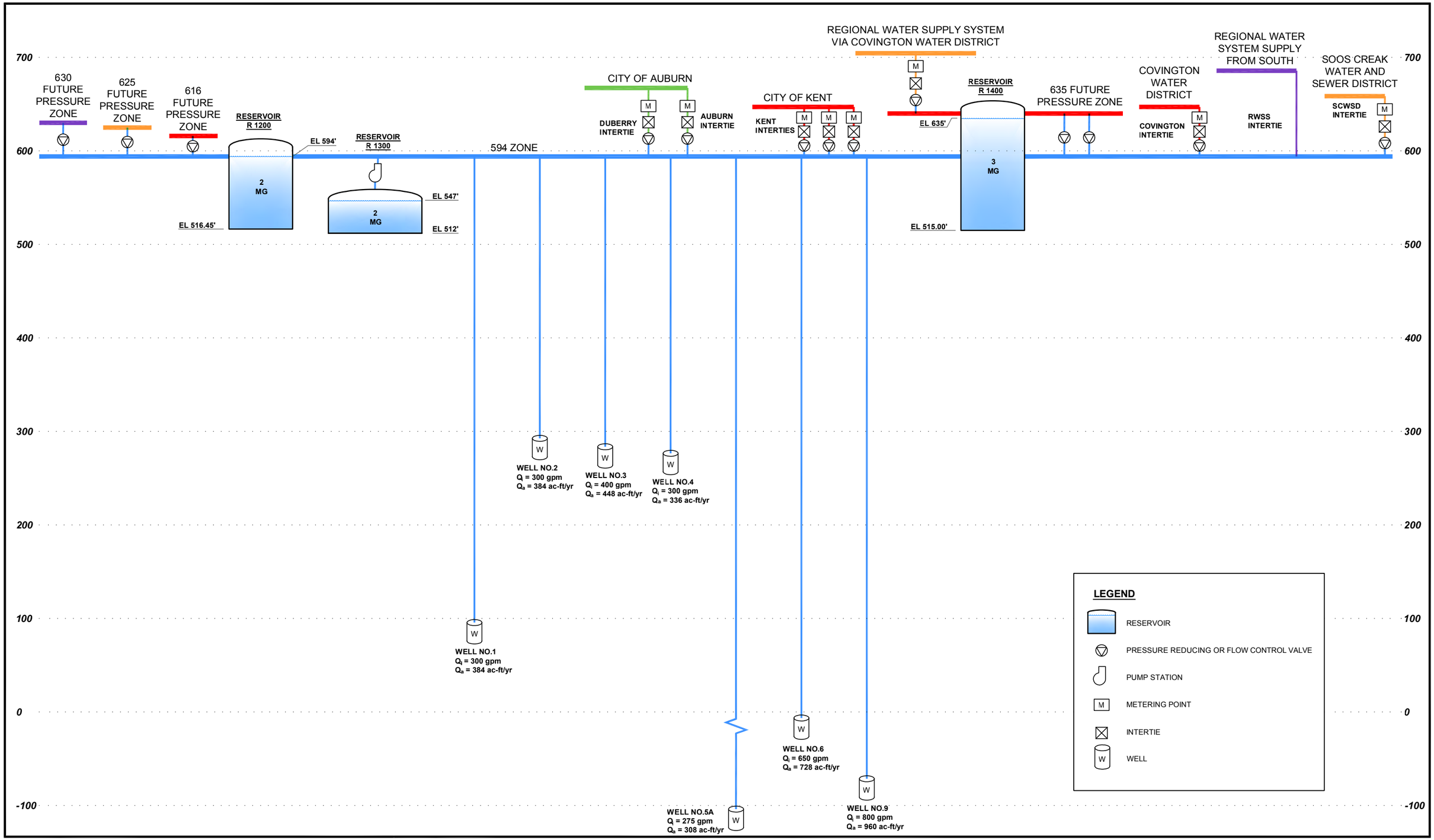

bhc CONSULTANTS

Lake Meridian WATER DISTRICT

Future Hydraulic Profile

2023 Water System Plan Update
Lake Meridian Water District
April 2023

Figure **1-5**

COPYRIGHT © 2023 BHC CONSULTANTS, LLC. ALL RIGHTS RESERVED

Path: S:\Cad\Lake Meridian WD\15-10043 Water Sys Plan\ Filename: F15-10043_F-1.5 Plot date: Apr 06, 2023-03:24:37pm CAD User: solsoe.
Xref Filename: |

THIS PAGE INTENTIONALLY BLANK.

1.6.1 Distribution Piping

Table 1-2 summarizes approximate pipe lengths for each type of material, as of December 2020. Approximately 53.5% of the District's 86.9 miles of water mains are 8-inch, 26.5% are 10-inch or greater, and 20.1% are 6-inch or less in diameter. Most of the District's piping is ductile iron (approximately 78.2%), with a considerable amount of asbestos-cement piping (approximately 16.6%). The remaining pipes are cast-iron (5.2%), polyvinyl chloride (PVC) (0.03%), and high-density polyethylene (HDPE) (0.5%).

On January 1, 2017, the District assumed ownership of 7,153 linear feet of 16-inch pipe, 46 linear feet of 12-inch pipe and 21 linear feet of 8-inch pipe. This acquisition was part of the Wholesale Supply of Water Agreement between Covington and the District.

Table 1-2
Inventoried Pipe Materials and Lengths Material

Diameter (inches)	Asbestos Cement	Cast Iron	Ductile Iron	PVC	HDPE	Total (feet)	% of Total
2					545.00	545	0.1%
4	5,706	2,115	16,218	--	--	24,039	5.2%
6	33,918	10,733	22,773	--	--	67,424	14.7%
8	27,401	10,252	207,427	120	1,698	245,199	53.5%
10	9,034	175	4,852	--	--	14,061	3.1%
12	--	--	87,854	--	--	87,854	19.2%
16	--	--	19,579	--	--	19,579	4.3%
Total (feet)	76,059	23,275	358,702	120	2,243	458,700	
Total (miles)	14.4	4.4	67.9	0.0	0.4	86.87	
% of Total	16.6%	5.1%	78.2%	0.03%	0.5%	--	

1.6.2 Supply Facilities

Table 1-3 provides an inventory of the District's wells. More detailed information for each well, including existing water rights and source reliability, is provided in Chapter 6.

Table 1-3
Inventory of the District's Wells

Well No.	Total Depth Drilled	Screen Intervals	Casing Size	Aquifer Interval	Date Drilled	Permit Number	Online as of	Type
1	256	43-53	12	23-56	Jan-81	G1-23817P	May-84	Emergency/ Not in Use
2	68	44-54	12	40-57.5	Oct-82	G1-23817P	May-84	Emergency
3	84	54-74	12	49-76	Nov-82	G1-24302P	May-84	Primary
4	170	144-166	12	138-155	Dec-82	G1-24301P	May-84	Emergency
5A	1,210	302-324	12	302-337	May-91	G1-24299P	May-92	Primary
6A	397	225.5-238.5	12	223-239	Nov-84	G1-24568P	Jun-86	Primary
6B[1]	253	222-242	20	223-243	Nov-21	G1-24568P	*	Primary
7	255	224.5-245	12	220-249	Jul-88	N/A	N/A	Monitoring
8	573	-	10	-	Jul-89	N/A	N/A	Monitoring
9	443	393.5-414	10	366-417	Dec-88	G1-25374P	May-91	Primary

Note:
1) Well 6B has not been equipped at the time of Water Comprehensive Plan writing.

1.6.3 Storage Facilities

The District has three (3) reservoirs, all located on the same site (approximately SE 252nd Street and 128th Place SE). The District previously owned 43% of a joint use 3.5 MG reservoir with the City of Kent. This project was constructed jointly by the City and District. The District sold their interest in this project to the City in 1989. The District retained an easement for construction of a future reservoir and water lines. Table 1-4 lists the District's existing reservoirs and basic storage data.

Table 1-4
Reservoirs

Name	Nominal Capacity (MG)	Base Elevation (feet – NAVD 88)	Overflow Elevation (feet – NAVD 88)	Diameter (feet)	Construction Material and Year of Construction
1100 Tank	0.15	569.82	598.72	34	Steel, 1962
1200 Tank	2.00	520.32	593.90	68	Steel, 1984
1300 Tank	2.00	513.08	547.48	100	Concrete, 1997

1.7 Adjacent Purveyors and Interties

The District has eight (8) interties with four (4) adjacent purveyors, which are summarized in Table 1-5. The District values its interties with adjacent purveyors as a critical element of its system reliability. Where possible, the District's water system has been designed so that normal operation is not affected if any one component is off-line. Future interties will be evaluated on a case-by-case basis to ensure the District's service to customers is in accordance with the policies and criteria in Chapter 3. The District recently constructed an intertie with Covington Water District. This intertie is discussed further in Chapter 6. Copies of the agreements identifying the parameters of operation for each intertie are included in Appendix D.

Table 1-5
Adjacent Purveyors and Interties

Purveyor	Address	Description	Hydraulic Grade Line	Physical Capacity
Regional Water System Supply	29622 132nd Ave	Emergency - Gravity – One way	764	1.4 MGD
Soos Creek Water & Sewer District	SE 240th Street and 135th Avenue SE	Gravity – Emergency one-way	627	500 GPM
City of Kent	124th Avenue SE and SE 256th Street [1]	Emergency – Gravity one-way	590	750 GPM
	124th Avenue SE and SE 282nd Street [2]	Emergency – Gravity one-way	590	750
	124th Avenue SE and SE 277th Place [3]	Emergency – Gravity one-way	590	750
City of Auburn [4]	132nd Avenue SE and SE 304th Street	Emergency Supply two-way	563	2.5 MGD
Covington Water District	SE 272nd Street and 158th Avenue SE	Booster Supply two-way	660	2.2 MGD [5]
	SE 288th Street and Highway 18	Gravity – Primary	660	521-833

Notes:
1) Check valve in system allows only gravity flow from Kent (64 psi) to the District (60 psi).
2) Check valve in system allows only gravity flow from Kent (81 psi) to the District (81 psi).
3) Bi-directional, Kent (66 psi) and the District (73 psi).
4) Emergency supply from the City of Auburn is considered as wholesale supply on an as needed basis per the First Amendment to Interlocal Agreement #2.
5) Provided via gravity supply from Covington Water District to the District.

1.7.1 Soos Creek Water & Sewer District

This emergency intertie is located between the District and Soos Creek Water & Sewer District (Soos Creek) near the intersection of SE 240th Street and 132nd Avenue SE. This connection allows water to flow by gravity from Soos Creek's 627 zone into the District's 594 zone. Site provisions were made for the future

design and construction of pumping improvements to allow water to be moved from the District's 594 zone back into Soos Creek's 627 zone. This intertie is an emergency intertie and used solely as an emergency interim supply.

1.7.2 City of Kent

The locations of the three (3) interties between the District and the City of Kent, including system pressure for each, are listed in the Table 1-5. These interties are emergency sources and used solely as an emergency interim supply. The Kent reservoir needs to be at a hydraulic grade line approximately 10 feet higher than the District's reservoirs to use the interties at SE 277th and SE 282nd Street.

1.7.3 City of Auburn (Interlocal Agreement No. 1 and Interlocal Agreement No. 2)

The primary source of water for Auburn is groundwater from a combination of natural springs and wells. The City distributes water to its four (4) major service areas through several pump stations. The City maintains eight (8) water reservoirs located in various areas of its service area. These reservoirs store approximately 15.8 million gallons of water.

The Interlocal Agreement No. 2 facilities were constructed between 1998 and 2000 and include the following: two (2) 3,500-gpm wells, Well 6 and Well 7, both within the Valley Service Area; the Green River Pump Station, constructed in Isaac Evans Park, along with associated pipelines to deliver water into the Lea Hill Service Area; a booster pump station, the Intertie Pump Station, near the Lea Hill Reservoirs along 132nd Avenue SE; and associated pipelines to deliver water from the Lea Hill Service Area to the District. Associated intertie meter stations were constructed by the District and Covington Water District and are located at 132nd Avenue SE and SE 288th Street.

The two-way intertie located at the City's Lea Hill Reservoir site at 132nd Avenue SE and SE 304th Street is intended to be used as a continuous supply source for the District. As defined in Interlocal Agreement No. 2, Auburn provides up to 2.5 MGD to the District and up to 2.5 MGD to Covington Water District; this agreement is on an interruptible basis. Covington Water District did not renew its purchase agreement in 2010.

The Intertie will also provide an estimated 1.5 MGD gravity flow from the District to the City of Auburn on an emergency basis. This intertie was field tested in 1996 to confirm its working status and simulate emergency operation.

The District and the City have two (2) emergency interties. The intertie facilities are located near the intersection of 124th Avenue SE and SE 300th and the intersection of 127th Place SE and SE 300th, which are used only for the Duberry Hill development.

In 2010, the District agreed to purchase an average of 0.75 MGD during the winter and 1.0 MGD during the summer from the City on a take or pay basis. This is a portion of, and not an addition to, the 2.5 MGD allocated to the District. This agreement was made to avoid unpredictable water sales and create a predictable and reliable cost for wholesale water to be sold by the City to the District. This agreement expired in 2015, with the option for one-year extensions.

The District discontinued regular purchase of water from the City of Auburn in 2017, and instead switched their primary supply to Covington Water District. The intertie with the City of Auburn is maintained as emergency supply even though the First Amendment to the Interlocal Agreement #2 identifies the supply from the City as wholesale supply.

1.7.4 Covington Water District

The Covington Water District (CWD) is served by its own groundwater supply system, with nine (9) pressure zones, and also by the Regional Water System Supply (RWSS). CWD is a partner within the RWSS Partnership that also includes Tacoma Public Utilities, Lakehaven Utility District, and the City of Kent. The partnership jointly owns and maintains the Pipeline 5 (P5) pipeline from an intake and headworks on the Green River to service the partners and their wholesale customers. In 2015, the RWSS constructed the Green River Filtration Facility that filters water to the pipeline.

Covington has a 16-inch intertie with the District at 288th Street near State Highway 18. They also have an emergency flow intertie with the District at 15903 SE 272nd Street. As stated above, Covington took Auburn's place to become the primary supply source for the District in 2017, providing up to 1.2 MGD.

1.7.5 Related Plans

Hazard Mitigation Plan

The District's Hazard Mitigation Plan was approved by the Board of Commissioners on June 25, 2020. The Hazard Mitigation Plan provides a framework for understanding potential risks and responding to natural hazards in accordance with King County Emergency Management's mitigation plan monitoring and update process.

King County Comprehensive Plan – 1994 Plan with Updates Through 2020

The King County Comprehensive Plan (KC Plan) manages the projected growth within unincorporated King County by designating where growth will occur through policies, goals, plans and regulations. The KC Plan includes a land use map of unincorporated King County and a zoning map of projected growth. An urban growth boundary is also defined in the KC Plan to direct most of the projected growth into more urban areas.

City of Kent Comprehensive Plan

The City of Kent Comprehensive Plan (Kent Plan) was adopted in 1995. Subsequent updates have responded to local, regional, and statewide policy issues and development projects, significant annexations, and amendments to the Growth Management Act (GMA). The Kent Plan was updated in 2015, in accordance with the GMA periodic update cycle. The City is currently working on the next Periodic Update, which must be adopted by December 31, 2024. According to Census estimates, in 2022 the City's population was 134,835 residents and encompassed a land area of 33.75 square miles. Most of the District's service area lies within Kent's city limits. Kent provides policy direction on coordinating with local utility providers to ensure consistency with its Comprehensive Plan.

South King County Regional Water Association Coordinated Water System Plan

The CWSP was developed in accordance with the "Coordination Act" (Chapter 70.116 RCW; WAC 248-56) for water utilities in the State to coordinate their planning and construction programs with other water

utilities and local governments in the same geographic area. The CWSP was completed in October 1989. Service area boundaries were identified by each utility for capital improvement planning and service responsibility. Evaluation of source requirements and source availability was conducted. Future water supply was discussed as a part of the CWSP.

Soos Creek Water & Sewer District Water Comprehensive Plan

Soos Creek Water & Sewer District completed its Water Comprehensive Plan in 2014. Soos Creek receives its water from the City of Seattle at three (3) locations. Two (2) are on the Cedar River Pipeline and the third from a City pump station at Lake Youngs reservoir. The flow from the City reservoirs is by gravity to Soos Creek. The Plan provides information on its existing interties, including one (1) with the District. It is a one-way system designed to provide emergency water supply and has not been activated since construction.

Soos Creek Water & Sewer District Sewer Comprehensive Plan

Soos Creek completed its most current Sewer Comprehensive Plan in 2012. Soos Creek serves approximately 92,500 people within 35 square miles. The District lies within a portion of Soos Creek's service area. Policies in the Soos Creek Sewer Comprehensive Plan provide coordination with adjacent jurisdictions and wastewater reuse facilities. While Soos Creek does not identify any reuse facilities with the District's service area, the District is in support of future discussions should the opportunity arise.

City of Kent 2019 Water System Plan

The most recent City of Kent Water System Plan was completed in 2019. The Kent water system service area covers approximately 23.7 square miles. The City maintains a system of supply, storage, and distribution mains to an estimated 68,157 people in 2016. Water demand is expected to increase by approximately 14% of 2016 demand by 2036. The City maintains supply and emergency interties with the City of Auburn, Covington Water District, Lake Meridian Water District, Highline Water District, City of Renton, Soos Creek Water & Sewer District, and City of Tukwila. The District overlaps with the Kent city limits in several areas.

City of Auburn 2015 Water Comprehensive Plan

The City of Auburn has a Water Comprehensive Plan that was adopted in 2015 and is currently drafting the 2024 Water Comprehensive Plan. The City maintains a system of supply, storage, and distribution facilities to provide water service to more than 13,910 connections, serving a population of 56,000. The City maintains wholesale supply interties with adjacent water systems: the City of Algona, Covington Water District, and King County Water District No. 111. The City directly serves customers from the Muckleshoot Indian Tribe and the Indian Health Service outside the City who reside on reservation land. The City's agreements, Interlocal Agreement No. 1 (IA1) and Interlocal Agreement No. (IA2), were negotiated in coordination with the King County Water District No. 111 and Covington Water District supplies. Tacoma Public Utilities constructed the Second Supply Pipeline Project, which runs through the north end of the City's RWSA. Several other entities, including the District, are part of this project.

Covington Water District 2016 Water Comprehensive Plan

Covington Water District's 2016 Water Comprehensive Plan was approved for a 10-year review cycle in January 2017. Covington Water District is primarily served by its well system and from its partnership in the RWSS. Covington Water District is also participating in the City of Tacoma's Pipeline 5 Project for

additional water supply. Covington Water District has one (1) emergency intertie with the District that is used solely as an emergency interim supply. The District served approximately 50,000 people through 19,000 water connections at the end of 2022.

Watershed Planning

In 1999, the Federal government listed Puget Sound chinook salmon and bull trout as threatened under the Endangered Species Act (ESA). Through the Water Resources Inventory Areas (WRIA) designated by the State, each WRIA is preparing or has prepared a Draft Habitat Plan. The District is located in the Green/Duwamish and Central Puget Sound Watershed (WRIA9). This Draft Habitat Plan was developed through a multiple stakeholder process, including city and county elected officials, water and sewer districts, state and federal agencies, scientists, local businesses and community environmental and educational groups, and concerned citizens. The Draft Habitat Plan provides:

- Adaptive management approaches and implementation
- Habitat management strategies
- Monitoring and adaptive management
- Implementation plan

It is anticipated that this Draft Habitat Plan will lead the region towards healthy, harvestable salmon and improved water quality. The Draft Habitat Plan is included in the Shared Strategy for Puget Sound collaborative effort to protect and restore salmon runs across Puget Sound. The Shared Strategy combines individual watershed plans of the Puget Sound area into an integrated regional recovery plan.

While the District does not participate directly in this planning process, it is a member of the Washington State Association of Sewer and Water Districts (WASWD) and the SKCRWA who are actively participating. The District is provided updates through Association meetings. The Puget Sound Chinook ESA Salmon Recovery Plan was approved by the National Oceanic and Atmospheric Administration (NOAA) Fisheries Service in 2007.

THIS PAGE INTENTIONALLY BLANK.

Chapter 2 Basic Planning Data and Water Demand Forecasting

2.1 Introduction

This chapter summarizes the zoning, land use, population, and employment data that are subsequently used to predict future growth needs for the Lake Meridian Water District's (District) water system. It describes items such as the quantity of water supplied by the District and water consumption by consumer class. The historical and existing sales and production data were used to develop unit water demands per Equivalent Residential Unit (ERU). This data is used to convert the residential and non-residential forecasts into projected average and maximum day future water demand. The future water demand is used to establish criteria for the hydraulic analysis of the water system and for development of the recommended Capital Improvement Program.

2.2 Planning Area

The District does not anticipate the Retail Water Service Area (RWSA) to expand beyond the currently designated planning area as defined by the South King County Coordinated Water System Plan (CWSP). The RWSA is shown in Figure 1-2. The level of service required within the RWSA will be affected by the zoning and land use planning of the cities of Kent, Covington, and Auburn, as well as unincorporated King County.

2.3 Land Use and Zoning

Land use and zoning designations are important factors in determining future water requirements. Zoning designates the area available for various types of land uses, such as single family or multi-family residential, commercial, or industrial. Land use refers to the particular activity occurring on a given tax parcel, such as a duplex, school, or post office. The jurisdictions served by Lake Meridian Water District are all required to complete periodic updates to their Comprehensive Plans by December 31, 2024. Kent is required to plan for and accommodate an additional 10,200 new residential units and 32,000 jobs citywide by 2044. Since this work is in progress, this plan relies on the adopted 2015 Comprehensive Plan information. Additionally, there are several pending state bills which may affect land use and growth during the upcoming planning horizon. Lake Meridian Water District and the City of Kent will collaborate during the City's Comprehensive Plan update process to explore how these changes may affect future population growth, including infrastructure and service needs.

2.3.1 Existing Zoning

Existing zoning within the Planning Area is designated by four jurisdictions: King County and the cities of Kent, Covington, and Auburn. The zoning designations are predominantly single family residential (mostly 4 - 8 dwelling units per acre), along with some multi-family residential, office, and commercial. Additional land uses within the District includes, but is not limited to, parks, water bodies, schools, and open spaces. Current zoning for the District's water service area is shown on Figure 2-1.

THIS PAGE INTENTIONALLY BLANK.

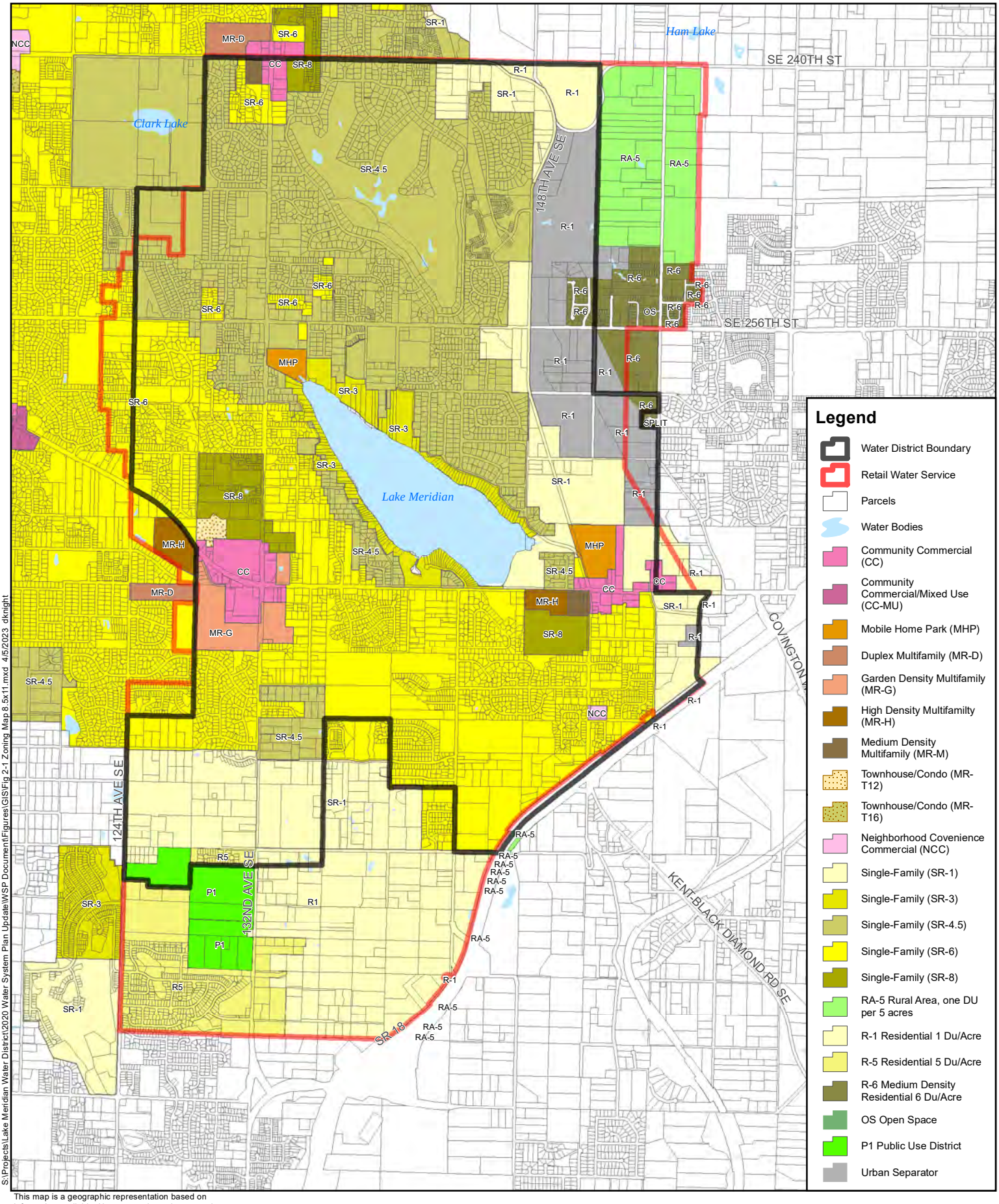

S:\Projects\Lake Meridian Water District\2020 Water System Plan Update\WSP Document\Figures\GIS\Fig 2-1 Zoning Map 8.5x11.mxd 4/5/2023 dknight

This map is a geographic representation based on information available. No warranty is made concerning the accuracy, currency, or completeness of data depicted on this map.

0 1,250 2,500 Feet

N

Lake Meridian WATER DISTRICT

Zoning Map

2023 Water System Plan Update
Lake Meridian Water District
April 2023

Figure 2-1

COPYRIGHT © 2023 BHC CONSULTANTS LLC. ALL RIGHTS RESERVED

THIS PAGE INTENTIONALLY BLANK.

2.3.2 Future Land Use

Future land use designations, also known as comprehensive planning land use designations, are developed based on the projected needs of the area for the next 20 years. Future land use designations for the Planning Area are expected to correspond to existing zoning and land uses. Similar to zoning, future land uses are designated by each of the four jurisdictions. The Comprehensive Plans for the cities of Kent, Covington, and Auburn used similar approaches for the portion of the District's water service area within their boundaries. This consistency of approach is encouraged by the Washington State Growth Management Act (GMA) and is intended to result in predictable and stable land uses over longer planning periods.

2.4 City Potential Annexation Areas

Each city in King County has the opportunity, during the preparation of its individual city-wide comprehensive plans, to designate Potential Annexation Areas (PAA). PAAs are urban unincorporated areas adjacent to a city. It is expected that cities will annex the designated PAAs within the next 20 years. Once a city annexes an area or enters the annexation process, discussion of service provision will take place between the area's water service provider and the respective City.

The remaining PAA within the Planning Area is approximately 40 acres and is located in the northeastern portion of the District. If annexed, the land use authority would change from King County to the respective jurisdiction. The rural unincorporated portion of the District will remain under the authority of King County.

2.5 Population and Employment

Many factors influence population growth. The state of the economy, interest rates, demands for annexation by neighboring cities and up-zoning all influence new development and population growth. Growth management policies, along with coordination between local governments and the Puget Sound Regional Council (PSRC), are intended to make development more predictable and growth projections more accurate than they have been historically. However, significant changes to the regional economy will continue to affect growth timing and patterns. Land use and development policies of adjoining jurisdictions may also affect growth patterns, especially considering threatened species listings and increased efforts to retain rural open space.

Accurate current and future population and employment estimates are necessary to adequately plan for and accommodate future water system needs. Current population was based on 2020 Office of Financial Management population growth estimates. Current employment was provided by the PSRC. Future population and employment were based on PSRC forecast data and the analysis of buildable lands.

Land Use Vision (LUV) population and employment data was obtained from PSRC for the 20-year planning period, out to year 2040. The LUV dataset provides long-range population forecasts based on local growth targets developed by each County to align with PSRC's VISION 2040 Regional Growth Strategy. Each City-wide comprehensive plan within the PSRC area must be consistent with this strategy. Use of this data ensures consistency of planning efforts in compliance with the GMA. The dataset obtained was delineated by Transportation Analysis Zones (TAZ). TAZ forecasts were distributed throughout the Planning Area based on an analysis of buildable lands and each parcels capacity for development.

The 2019 employment estimate provided by PSRC is 3,503 employees. This is taken from their 2019 Covered Employment data and captures employees covered by Washington Unemployment Insurance Act as well as those who are self-employed.

Puget Sound Regional Council's future employment model returned an improbably low employment forecast; even by 2040, with 2,783 employees, the projection falls short of the 2019 baseline of 3,503 employees by a considerable margin of 720. PSRC was contacted regarding the discrepancy and shared several potential explanations for this. One is that the model misread the District's job capacity. However, given that the Lake Meridian RWSA encompasses growing cities, the estimate of 3,503 employees seems more likely. It seems less plausible that employment would be suppressed in this region.

For this WSP, it was assumed that job growth will continue and that the District planning area still has room to grow in terms of employment. The chosen approach was to shift the employment curve by a reasonable amount and use the same rate increases used by PSRC. Table 2-1 shows an adjusted projection that uses 3,503 employees as a 2020 baseline and increases at the same rate as forecasted by the PSRC model.

Population projections for interim years were calculated by straight line interpolation between the baseline year and 2040, assuming a constant growth for the purpose of this Plan.

Table 2-1 presents the resulting total population and employment figures. Appendix G provides a detailed methodology for the population and employment analyses.

Table 2-1
Population and Employment Projections

Year	Population	Employment
2019	21,988	3,503
2020	21,979	3,503
2021	22,183	3,504
2022	22,387	3,504
2023	22,591	3,505
2024	22,795	3,505
2025	22,999	3,506
2026	23,117	3,521
2027	23,236	3,566
2028	23,354	3,633
2029	23,473	2,907
2030	23,591	3,582
2035	23,964	3,743
2040	24,370	3,904

Population and employment projections were completed in early October 2020. On October 29, 2020, PRSC adopted the VISION 2050 Regional Growth Strategy. However, as of April 2023, the new forecasting model (LUV-IT) is not complete, so VISION 2050 was not used for this Plan.

It is not uncommon for actual growth rates within the District to vary from those predicted. Growth rates will vary between different parts of the District based on the availability of services and the costs to develop the land for the zoned use. Although these factors were considered in developing the information included within this Plan, it should be noted that the rates of future growth will likely vary from those included within the Plan.

As required by the Municipal Water Law under Chapter 90.03.386(2), certification of the consistency statements will be requested by local land use jurisdictions during the agency review process. Statements that are complete are included in Appendix B.

2.6 Water Account Projections

Using the number of existing water accounts and the growth rates determined above, the future number of water accounts within the District were projected. Existing water accounts are defined as accounts that were active as of December 31, 2019. This was the most recent data available at the time of analysis. The projected accounts for the District's Water Service Area are shown in Table 2-2.

Table 2-2
Number of Existing and Projected Accounts

Year	Residential	Commercial
2019	5,768	224
2020	5,766	224
2021	5,819	224
2022	5,873	224
2023	5,926	224
2024	5,980	224
2025	6,033	224
2026	6,064	225
2027	6,095	226
2028	6,126	227
2029	6,157	228
2030	6,189	229
2040	6,393	250

Single family residential and multi-family residential protection accounts are projected to increase 5% from 2019 to 2025. Commercial accounts are projected to increase 0.1% for the same period. By 2040, projections estimate the number of single family and multi-family accounts will have increased 11% from 2019. Commercial accounts are projected to have increased 11% as well for the same period.

A brief analysis of the account projections finds that residential accounts constitute both the majority of the accounts in the District, and the fastest growing category.

2.7 Water Consumption

The District maintains extensive records of historical water production (including water that the District has purchased from adjacent jurisdictions), and consumption (based on billing records by consumer class). All the District's sources and adjacent water purveyor sources have meters. Together, the water production and the water consumption databases provide useful information for determining historical water use. Either data source alone may be misleading, but when combined with information on changes in operation and service area, they provide useful information on which to base future water needs.

2.7.1 Historical Supply

A summary of the historical amount of water produced from District wells and purchased from wholesale water purveyors from 2011 to 2019 is presented graphically in Figure 2-2 and detailed by year in Table 2-3. During this period, the District's water supply came from both water production and water purchased from the City of Auburn (separated into Auburn and Duberry), Covington Water District, and the Regional Water Supply System (RWSS). Additionally, the District did not sell water to neighboring water utilities over this same period. Monthly well production and purchases are shown graphically in Figure 2-3 and spreadsheets detailing water produced and purchased by month from 2011 to 2019 are included in Appendix N.

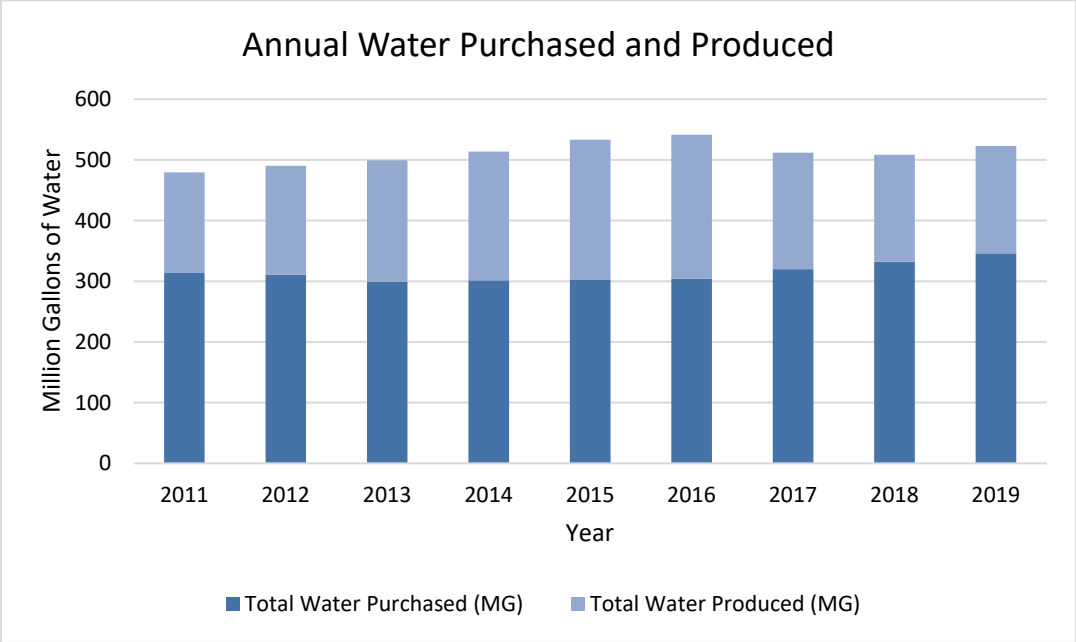

Figure 2-2 Annual Water Purchased and Produced

Table 2-3
Historical Annual Water Produced and Purchased (MG)

Year	Produced by Wells	Purchased from:				Total Purchased	Total Produced and Purchased
		Auburn	Duberry	RWSS	CI		
2011	166	252	62.1	0	-	314	479
2012	179	308	0	2.8	-	311	490
2013	200	299	0	0	-	299	499
2014	212	302	0	0	-	302	514
2015	230	0	303	0	-	303	533
2016	237	0	304	0	-	304	541
2017	192	-	0.3	0	320	320	512
2018	176	-	0	0	332	332	508
2019	177	-	30	0	316	346	523
Average	197	193	78	0.31	323	314	511

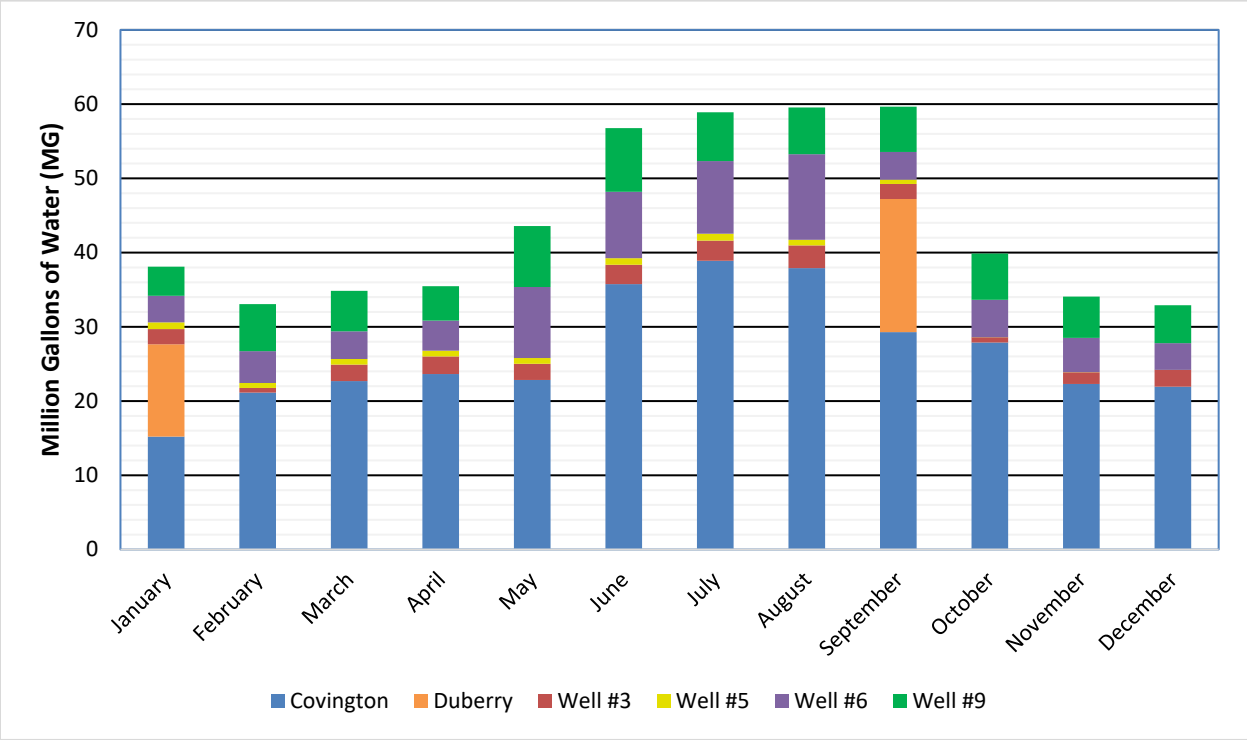

Figure 2-3 Monthly Well Water Production & Purchase 2019

The average annual volume of water produced and purchased from 2011-2019 was 511 million gallons and the total water produced and purchased for the year 2019 was 523 million gallons. This represented a 9.1% increase from the 479 million gallons of water produced and purchased in 2011. Variations between years typically reflect changes in consumer demands based on a variety of factors such as seasonal weather patterns, growth within the service area, and District policies. Based on the District's records, the historical maximum day demand (MDD) was 2.71 million gallons on July 24, 2018.

The system demand ratios, or peaking factors, shown in Table 2-4 illustrate the relative magnitude of maximum day demands as compared to average system demands. Determination of MDD is critical because it is the benchmark used by a number of the water system criteria discussed in Chapter 3. Supply capability, pump station discharge rates, reservoir capacity, and pump sizes are all determined based on MDD data. Due to data gaps MDD values were only available for 2018 and 2019. The average MDD/ADD factor is somewhat dependent on weather and economic conditions, but also is likely an indication of effective water use efficiency measures. Based on the variable historical MDD data from 2018-2019, the projected MDD/ADD factor is estimated to be 1.80.

Table 2-4
Historical Annual Water Produced and Purchased and Demand

Year	Produced and Purchased (MG)	ADD (MGD)	MDD (MGD)		MDD / ADD Factor
2018	508	1.39	2.71	(July 24)	1.94
2019	523	1.43	2.38	(Aug 8)	1.66
Average	516	1.41	2.54		1.80

2.8 Historical Water Consumption

The water that is produced and purchased each year has been divided into two main categories: authorized consumption and distribution system leakage (DSL). Authorized consumption is the water that is tracked by water meters for each water account. The difference between the water produced and purchased by the District and the amount used as reported and tracked by the water meters is assumed to be lost to system leakage.

Water purchased, water used, and total DSL over the past three years is shown in Table 2-5. The total quantity of DSL ranged from approximately 2.0% to 7.8% with an average of 5.8% of the total water produced and purchased from 2017 to 2019. It can be reasonably assumed that 2.0% DSL is an outlier, however, and the average value for 2017-2019 excluding 2018 is 7.5%.

Table 2-5
Distribution System Leakage (MG)

Year	Total Purchased/ Produced	Total Authorized Revenue Consumption	Total Authorized Non-Revenue Consumption	Distribution System Leakage	
				Million Gallons	Annual %
2017	541	499	1.2	40.8	7.5%
2018	508	496	2.6	9.9	2.0%
2019	532	488	2.8	41.2	7.8%

Authorized Consumption is divided into two categories: revenue producing and non-revenue producing. Revenue producing water is the amount for which consumers are charged. Non-revenue water is that which is used by the District or others, but for which no revenue is received by the District and is not included in the District's Financial System.

Water is used by the District for various non-revenue producing activities and is recorded manually by Operations Staff. The District conducts periodic high-volume flushing of the water system and records the volume of water spent on these activities. The District also provides water for testing and flushing of new waterlines installed as part of their Developer Extension Projects or Capital Improvement Projects and records this as well.

Distribution system leakage is defined as the difference between the total amount of water produced/ purchased and the total authorized consumption (WAC 246-290-820(2)(c)). Distribution system leakage includes both apparent losses and real losses. Apparent losses include things such as theft, meter inaccuracies, and data collection errors. Real losses are the physical losses from the distribution system and include such things as reservoir overflows, leaky valves, and water main breaks. Neither apparent nor real losses are authorized uses of water; they are therefore considered leakage even if they are not actual "leaks." Distribution system leakage does not include authorized water usage such as water used for fire protection, flushing, construction, and other maintenance and operations practices. However, to be credited, this must be accounted for by metering or by estimating water use with credible means.

The Water Use Efficiency (WUE) Rule became effective on January 22, 2007, to help conserve water for both the environment and future generations. The WUE requires that the three-year rolling average of DSL be maintained at less than 10% of the supply. Table 2-5 shows the system leakage for 2017-2019; each year the system met the WUE requirements with the highest loss being 7.8%.

Water Use by Consumer Class

Authorized water consumption is tracked by water meters which are separated into general Consumer Classes. Each meter is given two usage codes: a Rate Code and a Revenue/Bill Class code. For the purposes of the following analysis, the Revenue/Bill Class codes (Bill Class) were used, and meters were condensed into six Bill Class categories as shown in Table 2-6. Bill Class 16 – Compound Meters – was split between Multi-Family, Commercial, and Irrigation based on the account's Rate Code. Figure 2-4 shows the average annual water use over three years for each Consumer class in the District.

Table 2-6
Consumer Class by Bill Code

Consumer Class	Bill Class	Description
Single Family Residential	01	Residential
	09	Medical Residential
Multi-Family Residential	11	Multi-Residential
	16	Compound Multi-Residential Usage
Commercial	02	Commercial
	16	Compound Commercial Usage
Irrigation	06	Irrigation
	16	Compound Irrigation Usage
Fire Protection	08	Fire Protection
Non-Billed Consumption	07	Miscellaneous (Flushing + Retail)

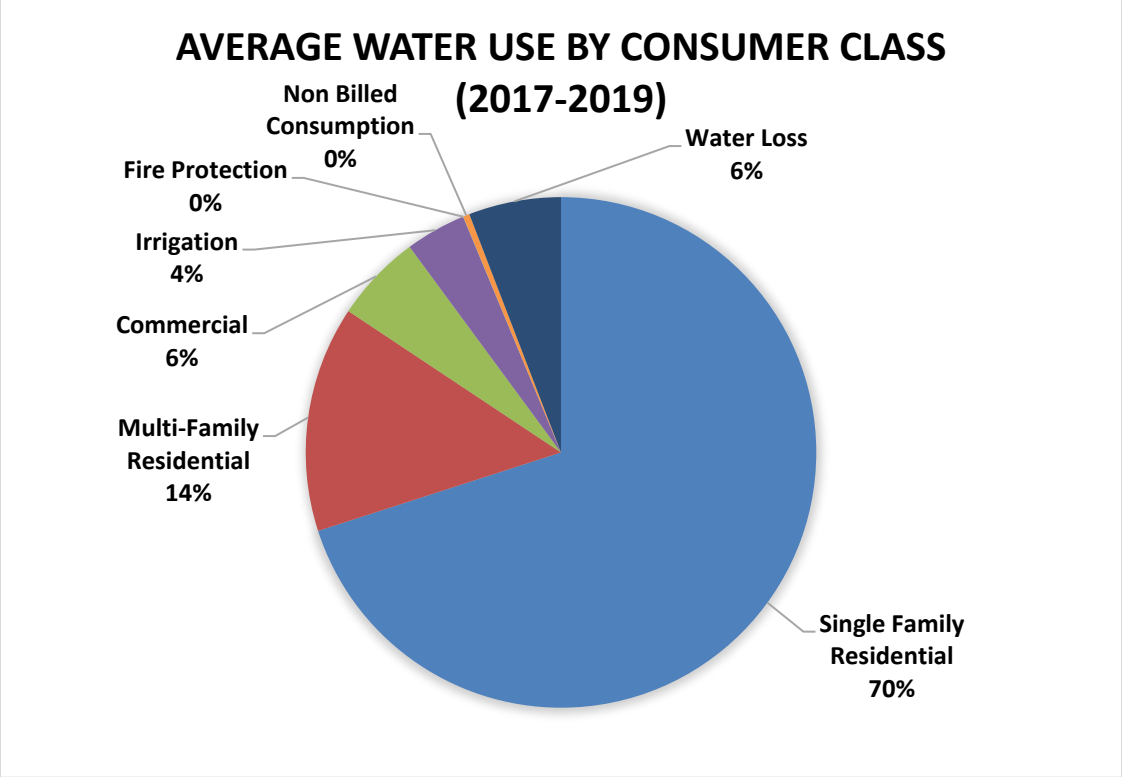

Figure 2-4 Average Water Use by Consumer Class (2017-2019)

The average water use by consumer class for the years 2017-2019 is summarized in Table 2-7. This table represents water use for the entire District as a whole and does not separate out specific geographical areas.

Table 2-7
Daily Total Usage by Consumer Class

Consumer Class	2017				2018				2019				Average			
	ADD (gpd)	% of Total Use	No. of Conn.	gal/Conn.	ADD (gpd)	% of Total Use	No. of Conn.	gal/Conn.	ADD (gpd)	% of Total Use	No. of Conn.	gal/Conn.	ADD (gpd)	% of Total Use	No. of Conn.	gal/Conn.
Single Family Residential	966,397	72.0%	5,596	173	1,020,998	74.7%	5,668	180	966,218	67.5%	5,659	171	984,538	71.4%	5,641	175
Multi-Family Residential	207,405	15.4%	108	1,920	204,726	15.0%	108	1,896	205,300	14.3%	109	1,883	205,810	14.9%	108	1,900
Commercial	76,024	5.7%	85	894	74,282	5.4%	85	874	89,520	6.3%	87	1,029	79,942	5.8%	86	932
Irrigation	57,563	4.3%	70	822	58,413	4.3%	73	800	49,261	3.4%	76	648	55,079	4.0%	73	757
Fire Protection	178	0.0%	59	3	252	0.0%	59	4	94	0.0%	59	2	175	0.0%	59	3
Non-Billed Consumption	3,296	0.2%	2	1,648	6,997	0.5%	2	3,498	7,569	0.5%	2	3,784	5,954	0.4%	2	2,977
System Leakage	111,801	8.3%	0	111,801	27,192	2.0%	0	27,192	113,144	7.9%	0	113,144	84,046	6.1%	0	84,046
Total	1,422,663		5,920		1,392,861		5,995		1,431,106		5,992		1,415,543		5,969	

THIS PAGE INTENTIONALLY BLANK.

The usage in the Single Family Residential category comprises the bulk of the water used in the District, averaging 71.4% of the District's total water usage between 2017 and 2019. During this time, single family water use varied between 67.5% and 74.7% of the total water usage with no clear trend over this period.

The Multi-Family Residential category includes duplexes, multiplex (apartment) units, and mobile home parks. This category has stayed relatively steady at 14.3% to 15.4% of the District's total water usage with an average of 14.9% of the total water usage over the years 2017 - 2019, making it the second largest water use category in the District. Over the historical period, the typical average daily demand (ADD) water usage per multi-family account, which may include a number of multi-family housing units, showed a slight downward trend.

Average commercial usage was 5.8% of the District's total water usage between the years 2017 through 2019, staying relatively steady at 5.4% to 6.3% of the District's total water usage with no trend. Irrigation will vary depending on the weather for each year; the average for these three years was 4.0%. Fire protection accounts for less than 1% of the overall usage within this service area. The volume of water utilized by this consumer class is dependent on the number of emergency situations each year.

At the end of December 2019, the District had approximately 6,000 connections ranging from 5/8-inch single family residential meters to 8-inch fire protection meters. This value is a rough approximation and is based on the number of accounts on record.

2.9 Equivalent Residential Units

An ERU is defined as the amount of water consumed by a typical full-time, single family residence. Table 2-8 shows the breakdown from the ADD to the number of ERU's per connection and the number of ERU's in each category for the District system in 2019.

One adjustment was made to the data before calculating the number of ERU's in each category. In 2019, the single-family residential water consumption was much lower than it had been the two previous years. When water consumption data was compared against monthly rainfall data from a rain gage near the District, it was noted that in 2019 the area received a cumulative rainfall for the months of June-September of 6.39 inches, whereas the same months for 2018 and 2017 saw totals of 3.53 and 3.31 inches, respectively. It was assumed that the increase in rainfall during the summer months of 2019 was the reason for the lower residential water consumption, given that consumers presumably watered their lawns and gardens less. To achieve a more typical representation of the District's water consumption, the average of the 2017 and 2018 single-family residential water consumption values were substituted for the 2019 value in this category only.

Table 2-8
2019 Water Consumption and ERUs

Consumption Category	ADD (gpd)	Number of Connections	gpd per Connection	ERUs per Connection	Total ERUs
Single Family Residential	1,027,164	5,659	182	1.00	5,659
Multi-Family Residential	205,300	109	1,883	11.03	1,202
Commercial	89,520	87	1,029	6.03	524
Irrigation	49,261	76	648	3.80	289
Fire & Other	7,663	61	126	22.17	45
Distribution System Leakage	113,144	N/A	N/A	N/A	623
Total	1,492,052	5,992	230	N/A	8,342

2.10 Diurnal Demand Pattern

To reflect demand patterns more accurately in the distribution system, a diurnal pattern was created. This pattern reflects an average of the entire system and was created using data from the District's SCADA system. A mass balance approach was taken by subtracting the change in reservoir volume from the well outputs each hour to create an hourly demand pattern. This pattern was then normalized to create a unit demand pattern. Two patterns created using SCADA data from August 4 and 5, 2020 were averaged to create a system-wide diurnal demand pattern, shown in Figure 2-5. Discussion of how this pattern was used in the system hydraulic model is included in Chapter 4.

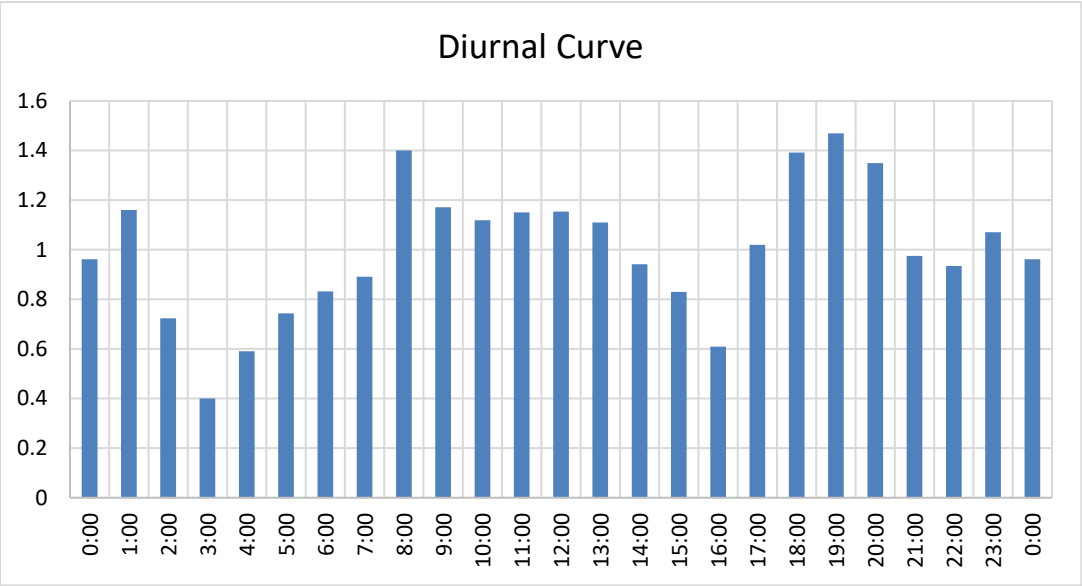

Figure 2-5 Diurnal Demand Pattern

2.11 Future Water Requirements

Projecting future water requirements is essential to the comprehensive water planning process. Identification of system improvements such as supply, pumping, storage, and piping requirements are all related to demand projections. For the purpose of this analysis, the water used was divided into three categories: Residential, Commercial/Other, and Distribution System Leakage. Future water supply and usage considerations due to climate change are also included in this section.

2.11.1 Residential

The Residential category includes residential consumers living in both single-family residences and multi-family residences. These two categories were combined to align with the population projection methods.

2.11.2 Commercial/Other

The Commercial/Other category includes commercial usage, irrigation, fire protection and non-billed consumption. These usages were combined to align with the employment projection methods.

2.11.3 Distribution System Leakage

The Water Use Efficiency (WUE) Rule requires that the three-year average of DSL be maintained at less than 10% of the total supply. All water use that was not authorized is considered DSL.

2.11.4 Future Water System Demand

The ADD per resident and per employee are calculated based on the annual ADD for each class as shown in Table 2-9 and the current population and employment in the District. The DSL as a percentage of the total water produced is 7.6% as shown in Table 2-9 and as described above. As a percentage of Residential + Commercial/Other, DSL is equal to 8.2%.

As was done in Section 2.9, to predict future water system demands the single-family residential category value was replaced with the average of the 2017-2018 data to account for the abnormality in the data from 2019.

Table 2-9
Unit Water Demands

Description	2019 ADD (gpd)	Unit	No. of Units In 2019	ADD per Unit (gpd/unit)
Residential	1,232,464	Person	21,988	53
Commercial/Other	146,444	Employee	3,503	42
System Leakage	113,144	Percentage[1]	1	7.6%
Total	1,492,052			8.2%

Note:
1) Percentage of total water demand from: residential and commercial/other.

The historical average daily demands per unit were increased based on a threshold of 190 gpd/ERU (the District's planning goal) to result in more conservative recommendations. The per unit water demands used for future planning are as follows:

Residential = 59 gpd/unit
Commercial/Other = 46 gpd/unit
DSL = 10% of Residential and Commercial/Other combined, rounded up

The escalated ADD/unit water demands were used in conjunction with projected population and employment estimates provided in Table 2-2 to calculate the future ADD and total water demands by category (Table 2-10) and overall total demand per year (Table 2-11). MDD is calculated based on the average MDD/ADD factor discussed above of 1.8. A Peak Hour Demand (PHD) factor of 1.47 was determined using the diurnal curve discussed in Section 2.10, and this factor was applied to the MDD values. Table 2-10 provides the future projections based on consumer category and Table 2-11 has the overall estimates for years 2019 through 2030 and 2040.

Table 2-10
Existing and Projected Average, Maximum, and Peak Daily Demands by Category (MGD)

Description	2019			2030			2040		
	ADD (MGD)	MDD (MGD)	PHD (MGD)	ADD (MGD)	MDD (MGD)	PHD (MGD)	ADD (MGD)	MDD (MGD)	PHD (MGD)
Residential	1.23	2.22	3.26	1.40	2.52	3.70	1.44	2.60	3.82
Commercial / Other	0.15	0.26	0.39	0.17	0.30	0.44	0.18	0.33	0.48
System Leakage	0.11	0.20		0.17	0.31		0.18	0.33	
Total Water Demand	1.49	2.69	3.95	1.74	3.13	4.60	1.81	3.25	4.78

Table 2-11
Existing and Projected Demands (MGD)

Year	ADD (MGD)	MDD (MGD)[1]	PHD (MGD)	Total Demand (MG)	ERUs
2019	1.63	2.93	4.31	594.80	8,978
2020	1.63	2.93	4.31	594.58	8,975
2021	1.64	2.96	4.35	599.50	9,049
2022	1.66	2.98	4.38	604.42	9,123
2023	1.67	3.00	4.42	609.33	9,197
2024	1.68	3.03	4.45	614.25	9,272
2025	1.70	3.05	4.49	619.17	9,346
2026	1.70	3.07	4.51	622.30	9,393
2027	1.71	3.08	4.53	625.43	9,440
2028	1.72	3.10	4.56	628.57	9,488
2029	1.73	3.12	4.58	631.70	9,535
2030	1.74	3.13	4.60	634.84	9,582
2040	1.81	3.25	4.78	659.64	9,957

Notes:
1) Based on escalated planning values discussed below Table 2-9.

Demand projections have been made for each year for the next 10 years. These projections can be seen in Table 2-11. The deficiencies identified in the system analysis serves as the basis for the Capital Improvement Plan in Chapter 8. The ADD and MDD projections (without water use efficiency) were used in the Chapter 4 system analysis. Water demand projections with water use efficiency are developed in Chapter 5.

2.11.5 Climate Change Considerations

We are fortunate in the Pacific Northwest to be close to the University of Washington Climate Impact Group (UW-CIG). The UW-CIG conducts research into climate change, prepares and runs climate models, and produces various tools for agencies and others to evaluate the impacts of climate change. UW-CIG works with the World Climate Research Programme (WCRP) Coupled Model Intercomparison Project (CMIP) where hundreds of climate researchers around the world share, compare and analyze the latest outcomes of global climate models (https://www.wcrp-climate.org/wgcm-cmip). The outcome of this collaboration is currently in its sixth phase (CMIP6).

The UW-CIG provides various tools that can be used by utilities to consider and evaluate the impacts of climate change. These tools can be found at: https://cig.uw.edu/resources/analysis-tools/

One of the tools available predicts the impacts on temperature and precipitation for various Shared Socioeconomic Pathways (SSPs). SSP-1 is sustainability, where the world takes a more sustainable path. This is the optimistic greenhouse gas emissions scenario where countries around the world take measures

to reduce greenhouse gas emissions. SSP-5 is fossil-fueled, where the world takes a path of development that exploits abundant fossil fuels and adopts resource and energy intensive lifestyles. This analysis will consider the impacts of two scenarios:

- SSP1-2.6: low greenhouse gas emissions; CO2 emissions cut to net zero by about 2075.
- SSP5-8.5: very high greenhouse gas emissions; CO2 emissions triple by about 2075.

Using the UW-CIG Pacific Northwest Climate Projection Tool results in the information shown in Table 2-12.

Table 2-12
Climate Change Impacts – Annual Average
West of the Cascades – CMIP6

Year	SSP1-2.6 Low GHG Emissions		SSP5-8.5 Very High GHG Emissions	
	Temperature	Precipitation	Temperature	Precipitation
2050s	+3.9 °F	+2.8 %	+5.2 °F	+3.4 %
2080s	+4.0 °F	+3.6 %	+8.5 °F	+6.6 %

Notes:
1) Data from Rogers, M., Mauger, G.S. 2021, Pacific Northwest Climate Projection Tool. University of Washington Climate Impacts Group

2.11.6 Impacts to Water Supply

Water supply to the District is from groundwater via the District wells and surface water via the Tacoma Regional Water Supply System wheeled to the District through the Covington Water District.

Groundwater is replenished from rainfall and since precipitation is projected to increase, there is likely no impact on the District's groundwater supply wells either in quantity or reduction in water levels.

The RWSS water is replenished from rainfall and snowmelt in the foothills of the Cascade Mountains. With the projected temperature increases, it is anticipated some of the precipitation that currently falls as snow will fall as rain. It may be necessary for Tacoma to consider increasing their storage volumes to capture this rainfall when if falls as opposed to when the snow melts. It is likely rain fall and snow melt will occur at different times of the year. The District has very little influence with Tacoma in planning for and implementing any changes needed to address these climate-related changes in precipitation. It is assumed Tacoma will address these issues when needed.

2.11.7 Impacts to Water Usage

Climate change is likely to have little to no impact on consumption of potable water for uses such as: drinking water; food preparation; washing and cleaning; or sinks, toilets, showers, and bathing. Due to the increase in temperature, there likely will be an impact on use of irrigation water.

The District is actively promoting reductions in use of irrigation water and continues to see reductions in water use due to water use efficiency measures. It is uncertain at this time if the increased water use due to increased temperatures will be completely or only partially offset by reductions due to water use efficiency measures. The District will continue to monitor water use in the coming decades. If future predictions indicate the District's water supplies are insufficient, the District intends to implement more aggressive water use efficiency measures or pursue additional sources of water. The District's current sources of water supply are sufficient for the 20-year planning period of this water system plan.

THIS PAGE INTENTIONALLY BLANK.

Chapter 3 Policies, Criteria, and Standards

3.1 Introduction

Chapter 3 describes Lake Meridian Water District's (District) policies, criteria and standards which provide the framework for the administration, expansion, planning, design, operation and maintenance of its water system, consistent with the goals established by the District's Board of Commissioners.

The District manages and operates its water system in accordance with all applicable federal, state, and local regulations. The District plans the development and financing of the infrastructure required for water services, as well as ensures consistency in service levels and customer relations. While the District has discretion in setting the performance, design criteria and standards for its water system, the criteria it sets must meet or exceed the minimum standards for public water supplies set by the Washington State Department of Health (DOH) through WAC 246-290.

The policies described in this Chapter are established by the District to provide a framework for planning, design, operation, and management of its system. In addition, the District has prepared and codified substantial rules of general applicability and statements of general policy or interpretations adopted by the District's Board of Commissioners that are not included in this Plan. Each policy is identified by number, with a policy statement and discussion following.

The District's criteria provide the requirements necessary to implement and enforce the established policies. The criteria focus on planning and design parameters and other details developed to establish consistency and to ensure adequate levels of service throughout the system. Other publications, such as the District's Developer Extension Agreement and the Design and Construction Standards, document the design standards and procedures for development of the water system. The District developed its Design and Construction Standards to be consistent with the American Water Works Association (AWWA), the DOH, and local land use authorities. This was done to ensure consistency between the agencies for construction of facilities. These documents are included in Appendix E, Developer Extension Agreement and Appendix F, Standard Specifications & Policy Statement Standard Details. Several policies contain multiple criteria, which are numbered according to the corresponding policy.

The District supports the land use policies and goals of the municipal jurisdictions overlapping the District's service area. It routinely coordinates with the land use jurisdictions within their service area on pending land use changes, proposed utility and transportation projects, as well as proposed revisions to their respective Comprehensive Plans. The District is committed to providing the water infrastructure necessary to meet the land use needs of its service area.

3.2 Goals

The District has established the following goals for water service:

1. Provide safe, reliable, and timely water service to its consumers at a fair and reasonable price.
2. Strive to provide adequate fire suppression during emergency situations.

3. Ensure that water service is available in a timely and reasonable manner to support development that is consistent with the District's policies, criteria, and standards as well as the current land use plans and development regulations of the State of Washington, King County, City of Auburn, City of Covington, City of Kent, and appropriate local planning agencies.
4. Protect the natural environment with operational and conservation procedures.

3.3 Policies and Criteria Categories

The District policies and criteria are grouped into the following categories:

1. System Reliability, Security, and Emergency Response Measures
2. Fire Protection
3. Coordination with Other Utilities
4. Water System Planning, Design and Construction
5. Environmental Stewardship
6. Water Use Efficiency
7. Human Resources

3.4 Definitions

Policies described in this Chapter provide guidance and direction for district staff to develop appropriate criteria and standards to support the District goals.

Criteria are established to provide the details and standards necessary to implement the policies established by the District.

3.5 Policies and Criteria

3.5.1 Customer Service, Service Area, Extension, and Service Ownership

These policies and criteria define the Retail Water Service Area (RWSA) and conditions for service extension within those boundaries. The service policies define the level of service provided to water system customers, as well as public and private ownership and responsibility for water system components.

Policy 1.1 – Retail Water Service – Duty to Serve

The District is committed to providing retail water service to all property within its defined RWSA in a timely and reasonable manner, consistent with applicable District resolutions and policies, the Municipal Water Law, DOH rules and regulations and other applicable federal, state and local laws. Pursuant to RCW 43.20.260, as a municipal water supplier as defined in RCW 90.03.015, the District has a duty to provide retail water service within its RWSA if:

- The District has sufficient capacity to serve the water in a safe and reliable manner as determined by DOH.

- District water service can be available in a timely and reasonable manner.
- The service request is consistent with adopted local plans and development regulations.
- The District has sufficient water rights and other sources of supply to provide the service.

The District will fulfill its "duty to serve" within its RWSA through the Policies 1.1 through 1.13 as described in this Chapter. The District will provide direct water service to all properties located within its RWSA as designated in the South King County CWSP and as approved by DOH; or the District will provide satellite water system management services if the property meets the conditions established for this type of water service as addressed in Policy 1.8 "Satellite System Policy" in this Chapter and applicable adopted District resolutions, policies, and procedures.

The District defines "timely" as the availability of retail water service consistent with the terms and conditions presented in Policies 1.1 through 1.13 in this Chapter and applicable District resolutions, policies and procedures. For example, the owners of properties which may directly connect to the District's existing water system without the need for the extension of that system as addressed in Policy 1.5 should be able to obtain water service within 120 days after the District receives an application for a water meter and the property owner requesting water service has complied with all applicable District water service policies and procedures and has paid all applicable District meter, connection and administrative rates, fees and charges to the District. The owners of property which require the extension of the District's water system to make water service available to the property should be able to obtain water service following the owner's execution of an extension agreement with the District, the preparation of a design of the extension required to connect the property to the District's existing water system by the owner's or the District's engineer and the approval of the extension design by the District, the construction of the extension by the owner's contractor, the owner's payment of all applicable District developer extension, meter, connection and administrative rates, fees and charges to the District, and the transfer of the ownership of the extension to the District by the property owner, all in accordance with the terms and conditions of the extension agreement and applicable District resolutions, policies and procedures. The party entering into the extension agreement with the District has one year from the date of the mutual execution of the extension agreement to complete this process to obtain retail water service from the District to the property.

The District defines "reasonable" retail water service as follows:

- Water service that is consistent with applicable local land use plans and development regulations;
- The conditions of water service and associated fees, costs and charges are consistent with the conditions of service described in this Plan and applicable adopted District resolutions, policies and procedures; and
- The conditions of service and associated fees, costs and charges are consistent with the District's requirements applied to other property owners requesting water service who are similarly situated and are requesting the same type or level of water service from the District.

As addressed elsewhere in this Plan (Chapter 6 "Water Rights, Supply Analysis and Source Protection"), the District has sufficient water rights and purchased water supply to provide retail water service within its RWSA. The District also has sufficient capacity to serve water in a safe and reliable manner as determined by DOH as addressed in other chapters of this Plan, including Chapter 4 "System Analysis," Chapter 6, and Chapter 8 "Capital Improvement Program."

As addressed elsewhere in this Plan, including Chapter 1 "Description of Water System," this Plan and related water system planning documentation are consistent with the requirements of local comprehensive plans and development regulations. Consistency Statements from local land use agencies with jurisdiction are included in the Appendix B.

However, in the event an individual applicant for water service or a party seeking a developer extension contends the availability of District water service is not "timely and reasonable," the applicant shall request that the District Board of Commissioners consider the applicant's complaint and that the applicant be given a hearing before the Board of Commissioners to present the applicant's evidence that District water service is not available on a "timely and reasonable" basis consistent with applicable District resolutions, policies and procedures and applicable state law. The District manager shall submit a recommendation and the basis therefore to the Board of Commissioners for consideration as part of the hearing. The applicant may attend and present the applicant's position at the hearing. Once a request for a hearing is submitted to the District, a hearing before the Board of Commissioners on the matter shall be held within sixty (60) days of the District's receipt of the request. A written decision of the Board of Commissioners on the matter shall be provided within twenty-one (21) business days of the conclusion of the hearing. Applicants shall be required to utilize and exhaust this District administrative hearing procedure as a precondition to requesting that anybody on behalf of the South King County Coordinated Water System Plan or King County consider any appeal or contention that District retail water service is not available to the applicant's property on a "timely and reasonable" basis.

Criterion 1.1.1 – District Responsibility

Provision of water service should be consistent with the goals, criteria, and policies of this Plan, the District's Satellite Management Plan and the corresponding and applicable land use regulations.

Criterion 1.1.2 – Developer Responsibility

Provision of retail water service both inside and outside the District's corporate boundary shall be conditioned on the development providing water system infrastructure improvements which meet the District's policies, criteria, and standards, and the provision of retail water service outside of the District's corporate boundary shall also be conditioned on the party requesting water service annexing the property to be served to the District's corporate boundary or signing a no-protest to annexation on the conditions and forms required by the District.

Criterion 1.1.3 – Service Standards

Water service will be provided to meet fire flow, pressure, and demand necessary to support development within the District's service area.

Policy 1.2 – Service Area

The 1989 East King County Coordinated Water System Plan established the District's Water Service Area boundary. This defined Water Service Area is now known as the Retail Water Service Area. The District has executed Interlocal Agreements with all of its adjacent water purveyors and confirmed their service area boundaries.

Criterion 1.2.1 – Water Service

The District serves areas within the Cities of Kent, Covington, Auburn and unincorporated King County. The District obtained a franchise from King County in 1995 which encompassed the entire RWSA. The District obtained a franchise from the City of Kent for those areas the District serves within the Kent city limits. The District does not anticipate the service area expanding outside of the currently designated CWSP known as the RWSA. The RWSA will be impacted by the planning regulations of King County as well as the cities of Kent, Covington, and Auburn.

Criterion 1.2.2 – No-Protest Agreements

In 2004, the District adopted by Resolution No. 485-09-04, a requirement that properties located outside the District's corporate boundaries, but within the RWSA must annex the property to the District's corporate boundary or sign a No-Protest Agreement for future annexation proposals as a condition of receiving water service from the District.

Policy 1.3 – Service Extension

Service extensions shall be considered and allowed on a case-by-case basis in accordance with criteria established by the District. Each service extension shall be accomplished by a Developer Extension Agreement (DEA) or by extension of extended water service lines through the District's In Lieu of Construction Policy. The District will consider formation of a Utility Local Improvement District (ULID) or implement a special connection charge to fund District projects on a case-by-case basis.

Criterion 1.3.1 – System Upgrade Costs

If the proposed development requires system upgrades beyond any upgrade planned by the District as a scheduled capital improvement project, the upgrades shall be made at the cost of the Developer.

Any service extension shall be at no cost to the District unless it benefits the overall system, such as oversizing or other system upgrades. The cost of mains and other facilities and a fair share of the portion of the cost of general facilities shall be paid for by the owners of property benefited by the construction of such facilities by others or by the District.

Criterion 1.3.2 – Extension Standards

Water system service extensions shall be allowed to provide service within the District's RWSA if the development is consistent with adopted development policies and all water system policies, criteria, and standards.

Criterion 1.3.3 – Annexation

It is in the best interest of the property owners to annex into the District's corporate boundaries to be able to vote for the elected Board of Commissioners who establish District service policies; however, the District will proceed with annexations on a case-by-case basis, per Resolution No. 485-09-04. The District may elect to defer the annexation until the property is contiguous to its boundaries or multiple annexations exist to make it cost-effective. Should the District defer the annexation, the property owner will be required to sign a "No-Protest Agreement." Property can then be provided water service until annexation occurs.

Policy 1.4 – Utility Local Improvement District (ULID) Extension

A ULID to install an extension to the District's water system may be formed upon petition signed by the owners of at least 51% of the area within the proposed ULID or by resolution initiated by the District Board of Commissioners. The property owners may request the Board of Commissioners to authorize District staff to prepare a petition for formation of the ULID; the Board will consider such request on a case-by-case basis.

Criterion 1.4.1 – Formation

The Board will proceed with the formation of a ULID only upon presentation of a petition verifying support for the ULID or upon resolution initiated by the Board. Upon successful completion of the required steps to form the ULID, as prescribed by statute and including notification of each property owner within the ULID and a public hearing, the District will consider proceeding with the construction of the facilities.

Criterion 1.4.2 – Costs

All costs of design, construction and associated ULID requirements, except those described herein, shall be borne by assessments to the benefited properties within the ULID. The District would consider paying for extra costs associated with mains that are oversized so that general facility needs may be met. The property owners within the ULID would be responsible for the equivalent cost of the size needed to serve the ULID. The District may consider cost sharing of other facilities within a proposed ULID on a case-by-case basis.

Policy 1.5 – Developer Extension

Pursuant to Chapter 57.22 RCW, a property owner may elect to enter into a private contract to install an extension to the District's water system. The private contract consists of a Developer Extension agreement with the District.

Criterion 1.5.1 – Design

The property owner may have the District's Engineer prepare the design documents for the extension or retain its own engineer to do so. If the property owner elects to have its own engineer prepare the design documents, the property owner would be responsible for costs associated with the District's staff and engineer reviewing the documents for compliance with District standards.

Criterion 1.5.2 – Costs

The property owner shall be responsible for obtaining a contractor to install the watermain and associated improvements and shall be responsible for paying all costs associated with the design and construction of the extension. The District would consider paying for extra costs associated with mains that are oversized so that its general facility needs may be met. The property owner would be responsible for the equivalent cost of the size needed to serve the development. The District would also consider participating in a Developer Extension Project for other improvements to the system on a case-by-case basis.

Criterion 1.5.3 – Ownership Transfer

Ownership of the water facilities shall be transferred to the District by a Bill of Sale upon acceptance of the project by the District. The property owner shall be responsible for acquiring, and conveying to the District, all easements necessary for the main extension and future implementation requirements of the District's Comprehensive Plan as determined necessary by the District.

Policy 1.6 – In Lieu of Construction

In instances where single family residential properties may be served by an extended service line and it is determined that a watermain is not necessary to serve the property at this time, the property may be served by paying the District's In Lieu of Construction Charge. The District will allow up to three sequential properties to be served by the In Lieu of Construction method before requiring the installation of a watermain. The amount of the In Lieu of Construction Charge is determined on a case-by-case basis and is consistent with the extension requirements for each project as if a watermain extension was required. Upon requiring a property to complete a watermain extension to serve their project, the District will review whether or not existing customers have paid In Lieu of Construction Charges that would be eligible to be used by the Developer as a contribution to the watermain project. Properties served by the In Lieu of Construction method also are required to pay all associated meter installation costs, general facilities and capital facilities costs, and all other applicable District charges.

Criterion 1.6.1 – Conditions

An application for service by In Lieu of Construction will be considered only when it is determined by the District that a full-size main extension is not required at the time of requesting service.

Criterion 1.6.2 – Easements

If the location of the future main is known, the owner shall convey any easements on his or her property to the District that are necessary for the future main, other implementation requirements of the District's Comprehensive Plan or as determined necessary by the District. The owners requesting service shall grant the easements as part of the water service. In the event that the locations of future main extensions are not known, the District will require easements at logical locations for future main extensions. The locations of easements shall be at the discretion of the District. The District will consider relinquishment of easements if a future development proposal clarifies the location of future main extensions, and the District determines they will not need previously granted easements. The District will require easements issued to the District on a form acceptable to the District. The District will not accept general utility easements for watermain construction.

Policy 1.7 – Water Service by Other Jurisdictions

The District anticipates providing service to all customers within their RWSA. Currently there are no written agreements with other purveyors to provide water service inside the District's RWSA.

Policy 1.8 – Satellite System Policy

The District may determine whether it is feasible to extend a watermain to the area to be served by the proposed satellite water system in accordance with Resolution 404-06-98, revised June 1998. Resolution 404-06-98 states that if a proposed satellite system is less than 1,320 feet from an existing District main, then it is presumed a watermain extension is feasible. If the distance is greater, then the District would consider allowing a satellite water system in accordance with the District's terms.

Criterion 1.8.1 – Agreement

The developer of a satellite water system shall enter into an agreement with the District in a form satisfactory to the District. Such agreement shall address, as a minimum, construction standards, and transfer of the system to the District, covenants, and recording/binding effects.

Criterion 1.8.2 – Standards

Satellite water systems shall be constructed pursuant to the District's standard form developer extension agreement subject to exceptions detailed in Resolution 369-07-96.

Criterion 1.8.3 – Charges

Standard District connection charges, reimbursement and rate classification shall apply to the parcels served by the satellite water system subject to exceptions detailed in Resolution 369-07-96.

Policy 1.9 – Certificates of Water Availability

The District may issue Certificates of Water Availability (CWA) to serve customers within the RWSA according to the date and order in which the applications are received and these certificates are intended to be consistent with the requirements of the overlapping land use authority.

Criterion 1.9.1 – Conditions

The certificates may be issued with conditional provisions for service. A CWA shall be valid for 365 days after which the applicant must reapply for a CWA. The District's Board may change or amend projects and the final schedule is confirmed by Board approval.

Policy 1.10 – System Ownership

The service line from the main to the meter, the meter and the meter box shall be owned and maintained by the District. The property owner shall own and maintain the service line and other facilities such as pressure reducing valves, pumps, or cross-connection devices beyond the meter. The District does not regulate the materials or standards for construction of privately-owned water service lines. The District may require that private water service lines be installed in a casing or sleeve. Where on-site fire hydrants are required, the District shall acquire easements for, and own, the mains and hydrants. Fire lines on private property are owned by and, therefore, the responsibility of the property owner. Double check valve assemblies on commercial property are owned and monitored for regulatory compliance by the District, but the property owner is responsible to maintain them.

Criterion 1.10.1 – Division of Ownership

The District uses meters to monitor and charge for water consumption. The meter will normally be located in the right-of-way at the property line and provides a logical separation between District and private ownership and responsibility.

Policy 1.11 – Water Quality

The District shall provide water that meets all state and federal water quality standards to all water system customers. Provisions to change the water quality for a specific development proposal will not be accepted by the District.

Criterion 1.11.1 – Cross-Connections

The District shall take the actions necessary to ensure that all water quality standards are met. This includes the implementation of a cross-connection control program, as well as compliance with all applicable DOH water quality regulations.

Criterion 1.11.2 – Backflow

For services needing backflow assemblies, the responsibility for costs of installing, inspecting, and testing backflow assemblies shall be that of the customer. Resolution 514-05-07 establishes the District's policy to implement a cross-connection control program. This program complies with the requirements of Washington Administrative Code 246-290-490 for community water systems.

Policy 1.12 – Wholesaling of Water

The District currently does not have agreements to provide continuous or non-emergency water to adjacent purveyors. The District purchases water supply from Covington Water District through a Water Supply Agreement that was signed in December 2015.

Policy 1.13 – Wheeling of Water

The District currently does not have an agreement allowing for "wheeling of water" through their system. However, the District is considering allowing other purveyors to use the District's system for transporting water on an emergency basis. Prior to entering into any agreements with adjacent purveyors for wheeling water, the District will evaluate necessary charges. The District does have an adopted wheeling charge. An appropriate charge will be developed by the District upon receipt of interest from any other agency seeking to wheel water through the District's system.

3.5.2 System Reliability, Security, and Emergency Response Measures

System reliability policies define the District's standards to construct and maintain reliable water system infrastructure and equipment. System security policies define the manner in which the District protects its facilities and staff. Policies related to Emergency Response Measures address the District's Emergency Response Plan, Risk and Resiliency Assessment, and Hazard Mitigation Plan.

Policies and Criteria Categories

- Customer Service, Service Area, Extension, and Service Ownership
- System Reliability, Security, and Emergency Response Measures
- Fire Protection
- Coordination with Other Utilities
- Water System Planning, Design and Construction
- Environmental Stewardship
- Water Use Efficiency
- Human Resources

Policy 2.1 – System Reliability

The District shall invest the resources necessary to construct, maintain and rehabilitate the water infrastructure and equipment to ensure that customers are provided consistent and reliable service in accordance with WAC 246-290-420. In addition, all new system construction shall meet the requirements of the District's Design and Construction Standards included in Appendix F.

Wherever possible, the District anticipates system interruptions, and it designs and operates the system with redundancy to minimize the impact of such interruptions on customers. The District will require redundant main to service critical public facilities such as emergency buildings, schools, and public facilities. Additionally, facilities requiring large fire flows, such as commercial users, may require redundant mains. The water system infrastructure, including storage facilities, watermains, hydrants and related facilities, shall be designed to meet all applicable codes, criteria and standards at the time of permit issuance.

The District shall plan to provide operational response to a variety of potential threats to the system. The greatest elements of maintaining system reliability are maintenance and planned replacement of facilities prior to exhaustion of expected service life.

The District plans system loops and redundant feeds to projects as a matter of routine practice. The District will require any major public facility to be served by at least optional feeds so that service disruption due to system shutdowns are minimized.

Criterion 2.1.1 – Well Supply Reliability

Supply reliability of the District's wells is critical to providing adequate service to customers. Malfunction of any of several supply components could cause a temporary limitation of the supply capacity. The following is a list of possible malfunctions and the time necessary to correct them:

Potential Service Interruption	Target Time for Repair	Action
Electrical Service Interruption	24 hours	Mobilize standby portable generators.
Pump or Motor Failure	6 weeks	Coordinate with suppliers for replacement parts. Where practical keep inventories of long lead-time items.
Control Failure	8 hours	Standardize all control systems. Keep inventory of select replacement control equipment.
Control Valve or Check Valve Failure	24 hours	Standardize valve manufacturers. Maintain inventory of pilot and control parts.

Criterion 2.1.2 – Reservoirs

The reliability of storage reservoirs is affected by a limited number of components. The District owns and operates three reservoirs, as described in Chapter 1. Potential service interruptions for reservoirs are summarized below.

Potential Service Interruption	Target Time for Repair	Action
Contamination	2 weeks	Maintain routine inspection of screens, ladders and access hatches. Maintain site security facilities and intrusion alarms.
Internal Inspection and Cleaning	2 weeks	Schedule routine cleaning for low demand season. Use divers for inspection whenever possible.
Re-coating	12 weeks	Schedule interior re-coating for low demand season.

Criterion 2.1.3 – Watermains

The most likely malfunction of the distribution system is pipeline failure. This raises the issue of the importance of having a looped distribution network that allows water to be rerouted to affected customers. Therefore, providing system looping and redundant pipeline connections are important distribution system criteria.

Distribution system reliability also depends upon maintaining an inventory of pipe and pipe repair materials available for the most commonly used pipe materials and sizes.

Potential Service Interruption	Target Time for Repair	Action
Pipeline Break	1 day	Maintain inventory of repair bands and pipe material for all known material types and sizes in the system.

Criterion 2.1.4 – Maintenance and Repair

All facilities and equipment shall be maintained in accordance with manufacturer's specifications, unless specifically approved otherwise by the District. The District has developed, and shall adhere to, maintenance and replacement schedules for all facilities and equipment.

The District shall perform all maintenance and non-emergency repair activities in accordance with its adopted Best Management Practices (BMP). Where feasible, emergency repair activities shall also comply with BMPs.

Criterion 2.1.5 – Equipment Inventory

The District shall maintain a complete inventory of all its trucks and equipment with planned replacement dates as applicable. Additional equipment may be replaced or purchased as required. The District shall also maintain a complete inventory of all supplies and parts in stock for the water system. This inventory shall be used to maintain or repair facilities within the District.

Policy 2.2 – Security

The District shall make every reasonable attempt to protect the security of its water system.

Criterion 2.2.1 – Facilities Security

The District has a detailed security plan for its system. The details of this plan are not published in documents available for review by the general public.

Criterion 2.2.2 – Information Protection

The District shall determine what information about the system should remain unavailable to the public. Any information deemed critical for the security of the system shall be made available only to regulatory agencies or other agencies on a case-by-case basis.

Policy 2.3 – Emergency Response Measures

The District shall update its Emergency Response Plan, Hazard Mitigation Plan, and a Risk and Resilience Assessment on a regular basis. These measures should provide for an organized response to the most likely emergencies that might endanger the health and safety of the general public or the operation of the District's water system.

Criterion 2.3.1 – Emergency Response Plan

An Emergency Response Plan has been prepared which addresses the District's equipment and supplies, roles and responsibilities and communications procedures in the event of an emergency. This Plan is not available to the public. The most current documents are available at the District's office upon request.

The Emergency Response Plan was updated in 2021 as required by the American Water Infrastructure Act.

Criterion 2.3.2 – Hazard Mitigation

As required by the Federal Mitigation Act of 2000, the District completed a Hazard Mitigation Plan which outlines measures the District will take to reduce risk of damage to its facilities due to natural disasters and reduce service disruption. This Plan outlines various natural disasters, identifies the facilities at risk, estimates potential financial losses, and includes a mitigation strategy. Additionally, the District participated in the King County Regional Hazard Mitigation Plan.

Criterion 2.3.3 – Vulnerability Analysis

A Water Vulnerability Assessment was completed by the District as required by the Bioterrorism Act of 2002. This document evaluates susceptibility of the District's system to potential threats and identifies corrective actions that can be taken to reduce the risk of serious consequences. It serves as a guide for security upgrades, modifications of operational procedures, and policy changes to mitigate the risks to the District's critical assets. The Vulnerability Assessment is not available to the public.

This Risk & Resilience Assessment, an update to the Vulnerability Assessment, will was completed on June 30, 2021.

Criterion 2.3.4 – Mutual Aid Agreement

The District has signed a Mutual Aid Agreement, which provides access to the resources of other agencies and jurisdictions and defines the terms under which agencies respond to such requests.

3.5.3 Fire Protection

These policies and criteria outline the District's fire flow requirements and the utility's commitment to system improvements to enhance available fire flow.

Policies and Criteria Categories

- Customer Service, Service Area, Extension, and Service Ownership
- System Reliability, Security, and Emergency Response Measures
- Fire Protection
- Coordination with Other Utilities
- Water System Planning, Design and Construction
- Environmental Stewardship
- Water Use Efficiency
- Human Resources

Policy 3.1 – Fire System Responsibility

The District will provide and maintain the necessary system infrastructure to supply water for fire-fighting purposes to all utility customers.

Criterion 3.1.1 – System Standards

The infrastructure will meet, or exceed, all minimum applicable standards and regulations for fire flow, storage and peak use periods, except under emergency conditions created by major disasters such as earthquakes or power outages.

The fire flow required for specific development shall be determined by the governing land use agency. The District will advise a project proponent of the available system pressure and fire flow. The developer shall advise the District of the required fire flow at the time a CWA is requested.

Criterion 3.1.2 – Costs

If the water system requires upgrades to provide the necessary fire flow, the costs of the system upgrades will be borne by the development requiring the system upgrades.

Criterion 3.1.3 – Maintenance and Repair

The District shall maintain, repair or replace mains, hydrants, and valves as necessary to ensure adequate fire protection. The District will monitor double check valves assemblies for regulatory compliance, usage, tampering and to ensure proper operation while the property owner is responsible for maintenance.

Policy 3.2 – Fire Flow Requirements

The District shall require that the fire flow requirements for the water system's level of service be provided as a condition of development and as a condition of any extension of the District's water system. The existing system may not meet this requirement, but the District will plan for improvements as part of its recommended Capital Improvement Plan, discussed in Chapter 8.

The level of service standard has two parts to the water system fire flow requirements within the District's RWSA. The first is a fire flow requirement established by the appropriate land use agency's Fire Marshal as a building-specific fire flow based on building use and materials of construction. The second is the system-wide fire flow criteria for single-family or other uses as established in the Plan for the entire water system.

New development and redevelopment, including changes in use or occupancy, shall meet the full fire flow requirements as established by this policy. The developer shall be responsible for installing all necessary facilities needed to serve the proposed development and for complying with the District's development, design, and construction standards in order to meet these requirements.

The fire flow criteria are minimum requirements for defining and providing an important level of service for the water system. Fire flow in excess of the above criteria may be required by the Fire Marshal to provide fire protection for specific types of building construction and use. Where the Fire Marshal determines higher fire flows are required, the higher flow will be used to determine required system improvements.

Criterion 3.2.1 – Required Fire Flow Rate and Duration

The quantity or flow rate of water available for the fire protection establishes an important level of service for a water system. The Fire Marshal is authorized to establish fire protection measures based on the fire hazard potential of a proponent's project. The District has planned to provide system wide fire flow as follows:

- Single-family residential: The District will plan to provide 1,000 gpm for two hours for single-family structures in residential zones.
- Non-residential: The District will plan to provide a maximum of 3,000 gpm for three hours for non-residential structures, with the exception of public facilities. Public facilities may be designed to the building specific fire flow as required by the Fire Marshal. Fire flow available from the District may be lower depending upon the specific location of the project within the District.

The required fire flow duration is dependent on the required fire flow rates. The District has adopted criteria for fire flow durations as required by the Insurance Service Offices Guidelines 1974.

Should a proposed development require fire protection rates beyond those planned for by the District, additional fire flow storage may be required. In this situation, the developer shall be required to provide additional storage facilities to meet the fire flow storage deficiencies resulting from the proposed project.

3.5.4 Coordination with Other Agencies

These policies and criteria summarize the District's commitment to coordinate and cooperate with other agencies, as well as to enter into interlocal agreements with neighboring jurisdictions for provision of water service.

Policies and Criteria Categories

- Customer Service, Service Area, Extension, and Service Ownership
- System Reliability, Security, and Emergency Response Measures
- Fire Protection
- Coordination with Other Utilities
- Water System Planning, Design and Construction
- Environmental Stewardship
- Water Use Efficiency
- Human Resources

Policy 4.1 – Regional Participation

The District should support and participate in applicable regional plans to provide and maintain a reliable and adequate water system.

Regional planning efforts promote a framework for coordinated water system improvements. Therefore, the District should coordinate and cooperate with adjacent jurisdictions and water service providers to identify anticipated growth, demand, and capacity requirements for water facilities.

The District will follow the programs outlined in the South King County CWSP (October 1989) in coordinating with utilities in the region.

Policy 4.2 – Coordination with Adjacent Jurisdictions

The District should coordinate closely with adjacent jurisdictions to determine applicable regulatory requirements, growth projections and opportunities for joint projects. Interlocal agreements should be prepared between the pertinent parties on all joint projects.

By working closely with adjacent jurisdictions, the District may identify opportunities for joint projects and thus minimize potential impacts to neighborhoods and the environment. These coordination efforts may also aid in diminishing regulatory hurdles that could increase project costs through restrictive permit conditions.

Policy 4.3 – Mutual Aid Agreement

The District will participate in Mutual Aid Agreements with adjacent jurisdictions, King County and the State of Washington. A Mutual Aid Agreement allows agencies to contract with each other to provide personnel and equipment to other agencies that request assistance during a disaster or emergency.

The District has signed a Mutual Aid Agreement which provides it access to the resources of other agencies and jurisdictions and defines the terms under which agencies respond to such requests.

Policy 4.4 – Emergency Interties

The District supports emergency interties with adjacent water systems where there is a benefit to the water systems. Interties increase reliability of water systems during emergencies and other unusual operational circumstances.

Criterion 4.4.1 – Costs

The District will consider sharing the cost of the intertie facility with the adjacent water system purveyors. The portions of sharing will be negotiated on a case-by-case basis.

3.5.5 Water System Planning, Design and Construction

Planning policies and criteria define the methods and procedures the District uses to determine facilities needed to meet anticipated growth within the District's service area. The water system design policies and criteria detail the District's standards for water supply, storage, and distribution facilities.

Policies and Criteria Categories

- Customer Service, Service Area, Extension, and Service Ownership
- System Reliability, Security, and Emergency Response Measures
- Fire Protection
- Coordination with Other Utilities
- Water System Planning, Design and Construction
- Environmental Stewardship
- Water Use Efficiency
- Human Resources

Policy 5.1 – Planning Objectives

The District will plan and design water system facilities that can deliver continuous, safe water supply to meet customer demand and be consistent with all applicable federal, state, and local regulations.

Policy 5.2 – System Planning

The District shall plan the construction of its infrastructure to accommodate growth while maintaining stable rates and charges.

Criterion 5.2.1 – Capacity Requirements

Future capacity requirements will be estimated using existing customer connections and projected future household, population and employment data as provided by the PSRC. This approach is further discussed in Chapter 2.

Policy 5.3 – System Design

The District should design its water system facilities with sufficient capacity to provide continuous service to meet customer demands and fire protection in accordance with all applicable federal, state, and local regulations.

Criterion 5.3.1 – System Standards

The District is a Group A Community System and, accordingly, is required to meet the regulations of WAC 246-290.

Criterion 5.3.2 – Developer Impacts

If the water system facilities must be installed or upgraded as a result of a developer's impacts, the new facilities or upgrades shall conform to the District's policies, criteria and standards and shall be accomplished at the developer's expense. The District shall be responsible for any portion of the costs that are attributable to its general facilities, such as oversizing or over-depth requirements.

Criterion 5.3.3 – Watermain Replacement Program

The District's watermain replacement program is prioritized based upon the following criteria listed in order or priority:

- Deficiencies in hydraulic continuity (bottlenecks)

- Age of pipe
- Leak history
- Size
- Material

The District should replace older mains when the project is coincidental with a street restoration or reconstruction project. The decision to replace mains in conjunction with street work is made on a case-by-case basis.

The District should complete loops to the existing network when reasonable.

Selected developer extension projects are often oversized to 12-inch mains to provide for additional transmission facilities. The developer extension projects are located randomly throughout the District and may not provide the most direct transmission routes to the areas of the District where improvements are necessary.

Long-term transmission projects should be implemented as demand on the system increases and additional sources are introduced.

Proposed King County, City of Kent, City of Covington, or Washington State Road projects provide possible routes to implement transmission projects when the road project requires relocation of existing waterlines.

Criterion 5.3.4 – Water Supply Requirements

The District will have sufficient water supply facilities and/or interties available to meet the Maximum Day Demand (MDD). As any of the District's supply facilities may fail as a result of an emergency event, the appropriate supply criterion to achieve the desired level of service is to have sufficient system-wide supply facilities to meet MDD with any single supply facility out of service.

Criterion 5.3.5 – System Storage

The District's system storage volume requirements consist of four separate components: operational storage, equalizing storage, fire protection storage, and standby storage. Storage facilities may also contain a "dead storage" component of volume that is unused primarily due to the configuration of the facility.

The operational storage is the volume within the tanks devoted to supplying the system while the sources are not activated in normal conditions. The District's operational storage is limited as water level sensors control the well and source pumps to maintain a high hydraulic grade line.

Equalizing volume is the total volume required to satisfy peak system demands that exceed the capacity of the supply and pumping facilities. The District will plan to provide equalizing storage in the amount needed to offset the difference between the peak hour demand (PHD) and the sum of all the installed and active source of supply capacities for duration of 2 ½ hours.

WAC 246-290-230 and the DOH design criteria require that new or expanding water systems have the capacity to provide design fire flows during MDD conditions. Fire protection volume requirements are computed based on the largest required fire flow and duration within the service area of the storage facility.

Fire protection volumes in excess of the above criteria may be required by the Fire Marshal to provide fire protection for specific types of building construction and use. Development proposals that require fire protection volumes exceeding the criteria will be required to provide additional reservoir storage for the system.

Fire storage from the District's system is provided by all three of the existing tanks. For a 1,000-gpm fire flow, all of the storage is supplied by the 2.0 MG concrete reservoir (T1300). The transfer pumps are capable of providing 2,200 gpm to the system during a fire, thereby maintaining the level in the other tanks. During a 3,000-gpm fire flow, the transfer pumps from T1300 supply 2,200 gpm for three hours, while the remaining storage is provided by the other tanks (T1100 and T1200).

Emergency and reserve volume is required to supply reasonable system demands during a foreseeable system emergency or outage, such as major pipeline failure, power outage, valve failure or another system outage. Emergency and reserve volume requirements are dependent upon average system demands and source of supply redundancy. The District has established a minimum standby volume criterion to provide sufficient standby storage to maintain service for two days of Average Daily Demand (ADD), with the largest source of supply off-line.

Standby storage and fire flow storage are "stacked" in the District's system, such that the standby volume is considered to be expended before the fire flow volume during analysis.

A storage analysis for existing and future scenarios is included in Chapter 4.

Criterion 5.3.6 – Pressure and Velocity

The function of the District's distribution system is to convey water to customers at adequate service pressures. The distribution system should also provide fire flows with adequate minimum residual pressures throughout the service area. The District has established a criterion for minimum pressure within the distribution system of 30 psi at the service meter during PHD conditions where all equalizing storage has been depleted for all new facilities without emergency conditions. The District has established criteria to provide MDD in addition to the required fire flow at a system pressure of 20 psi within the distribution system.

The District generally requires that maximum static pressure in the system should not exceed 110 psi. Recognizing the complexity involved in restricting maximum pressures during a wide variety of operating conditions, higher pressures may be present within the system. Those agencies responsible for reviewing applications and issuing building permits require individual pressure reducing valves (PRVs) on service lines where pressures exceed 80 psi as required by the IPC for new construction. Pipe velocities shall not exceed 10 feet per second during MDD in addition to fire flow conditions unless specifically waived by the District Engineer.

The District operates their system between a 581 and 594-foot hydraulic grade line. With an allowance of 5 psi for system pressure fluctuation, the District plans to provide 30 minimum psi at the customer's service meter during peak hour demands.

The District encourages developers to oversize the service lines of any house which would be constructed above the elevation of 500 feet. The District will also provide a 3/4-inch meter for single-family residential accounts located above 500 feet elevation at the same monthly charge as their standard 5/8 x 3/4-inch service meter. Customers with residences located above 500 feet are also encouraged to consider installing individual booster pumps if they desire service pressures at their meter above 30 psi.

Criterion 5.3.7 – Materials and Configuration

The minimum size for distribution piping shall be 8-inch except where determined by the District that a smaller size is adequate for dead end service. Pipe sizes larger than 8-inch may be required for major transmission and distribution lines, or to meet fire flow requirements. The District has eliminated the use of 10-inch pipes, as it has determined that it is more cost effective to install 12-inch mains.

The District standards for residential fire land use agencies' criteria and the Washington Surveying and Rating Bureau. Fire hydrants shall be spaced at a maximum of 300 feet in commercial areas and 600 feet in residential areas. All hydrants shall be on at least 8-inch lines for all new and expanding systems. Closer fire hydrant spacing may be required by the Fire Marshal to serve specific developments.

Looping of distribution systems shall be required, where practical, to provide improved water quality, redundancy, reliability, and increased fire flow capacity. Water system looping will often require off-site improvements to developing areas. Off-site improvements required to meet a development's needs will be done at the developer's expense.

The District also requires that all new subdivisions loop the proposed water system at all reasonably possible locations. Exemptions from looping requirements are usually limited to areas with 4-inch waterlines or other areas where future extensions and alignments are not yet determined. New subdivisions are also generally required to connect to the water system in at least two locations so that dead-end clusters or islands are avoided in the system.

Criterion 5.3.8 – Easements

All fire hydrants, water meters, watermains, and appurtenances which are not located within the public right-of-way, are located on easements which are granted to the District and recorded against the burdened property. Main line easements are generally 15 feet wide, with additional easements for hydrants, meters and other appurtenances.

Policy 5.4 – Construction Contract Standards

The District has established the construction contract standards by which its facilities shall be built. Construction contract standards define the relationship between the District, its engineer, and the contractor on a public works construction project. These standards shall be used as the basis for allocating and defining each party's responsibilities under the contract.

Criterion 5.4.1 – Designer Qualifications

All additions, modifications, and replacements to the system shall be designed by a Licensed Professional Civil Engineer who is currently licensed to practice in Washington State. Generally, most of the system expansions are designed by the District Engineer. In the event that a developer elects to utilize a different engineer for water plan preparation, the water plans are required to be prepared according to the District's Design and Construction Standards. The plans are then reviewed by the District Engineer and operations staff. If modifications to the plans are required, the District will withhold approval until the plans are satisfactory. All system additions, modifications, or replacements are witnessed by a construction observer assigned by the District. This process ensures installation is completed according to the approved plans and specifications.

Criterion 5.4.2 – Technical Specifications

The District shall use the Standard Specifications for Road, Bridge and Municipal Construction as published by the American Public Works Association (APWA) and the Washington State Department of Transportation (WSDOT) to define the technical portions of its construction contract documents. These technical or standard specifications shall be modified as necessary within the contract documents to in order to incorporate the District's Design and Construction Standards.

Criterion 5.4.3 – Construction Observation

Construction observers representing the District shall observe the construction in progress at a level determined by the District and monitor the contractor's compliance with the approved design.

Criterion 5.4.4 – Construction Record Drawings

Record drawings of all District funded additions, modifications, and replacements are prepared, stamped, and signed by the engineer who prepared the original plans. All record drawings for developer extensions are prepared, stamped, and signed by the District Engineer based on construction observation reports. The original mylars and electronic data are kept on file at the District office with copies issued to the engineer. Updates to the District base map and hydraulic model are also completed at that time.

Criterion 5.4.5 – Sampling and Testing

Prior to connection to the system, the District's assigned construction observer witnesses a static pressure test on the new mains. Water samples are collected on all new mains by District staff for confirmation of purity.

Criterion 5.4.6 – Acceptance

The District staff then prepares a Bill of Sale, Latecomer Reimbursement Agreement, easements, and an oversize reimbursement agreement, where applicable, prior to final acceptance of the system.

Generally, water meters are not issued until final acceptance of the proposed system. Limited issuance of meters for model homes or special circumstances may be done on a case-by-case basis, but in no case prior to confirmation of pressure and purity testing.

3.5.6 Environmental Stewardship

These policies outline the District's dedication to develop and implement facilities and programs related to environmental protection, water reuse and reclamation, and facility abandonment.

Policies and Criteria Categories

- Customer Service, Service Area, Extension, and Service Ownership
- System Reliability, Security, and Emergency Response Measures
- Fire Protection
- Coordination with Other Utilities
- Water System Planning, Design and Construction
- Environmental Stewardship
- Water Use Efficiency
- Human Resources

Policy 6.1 – Environmental Protection

The District shall strive to develop and implement programs, procedures and practices to protect and improve water quality, habitat, aquifers and other environmental values in areas where the District must construct, operate, maintain or replace water system infrastructure.

The District limits the use of hazardous and toxic materials in their daily operations as much as possible. Chemicals used for water treatment include fluoride, gas and liquid chlorine. The District is planning on converting all of its sources to on-site chlorine generation facilities. This will result in a treatment strategy that limits the amount of liquid chlorine stored at each well site to the minimum necessary for operation. The District will continue to treat its sources with fluoride. All well facilities will have chemical containment facilities to address spills.

The District provides de-chlorination for its flushing program in accordance with the requirements of the Department of Ecology. The District also routes all flush water into public storm drains thus eliminating erosion at the flushing source.

The District routinely includes Best Management Practices (BMPs) in all District and developer construction projects. BMPs include erosion control facilities, procedures for connection and flushing of new watermains and detailed construction site restoration plans. In addition to requiring that all District and developer projects address the BMPs, the District monitors all construction projects for compliance with the plans and permit requirements.

Policy 6.2 – Water Reuse and Rainwater Reclamation

The District will evaluate water reuse and rainwater reclamation. These approaches can serve as cost-effective and environmentally beneficial sources of water for industrial processes, sanitation and irrigation and thereby increase the security and reliability of the region's drinking water supply.

The District should offer to participate as appropriate in the water reuse projects and programs developed by King County and others, including demonstration or pilot projects that may be developed in accordance with applicable federal, state, and local laws and regulations.

District staff may investigate and recommend proposed changes to the District's development and service policies and regulations that may be desirable in order to encourage the promotion of these programs and technologies.

Policy 6.3 – Water Resource Protection

The District shall protect water sources within the District from degradation related to District actions, facilities, or programs.

Groundwater is a primary supply source for the District and recharges many local aquifers. The District recognizes that its actions and facilities have the potential to negatively impact these aquifers. Therefore, it has adopted standards and procedures aimed at reducing or avoiding potential impacts to the groundwater by its actions or facilities.

Criterion 6.3.1 – Wellhead Protection

A Wellhead Protection Plan has been developed by the District to identify and protect groundwater resources which serve as the source of supply to the District's wells. This Plan includes protection strategies, implementation tasks, a spill response plan and a contingency plan, a summary of which is included in Chapter 6 of this Plan.

Policy 6.4 – Facility Abandonment

Facility abandonment will be done in a safe and environmentally sound manner consistent with all applicable federal, state, and local regulations at the time of abandonment.

Criterion 6.4.1 – Standards

Abandoned pipe should remain in place and be filled with grout, control density fill or cut and capped. In the event the District abandons a pump station or reservoir facility, decisions about disposal of property and infrastructure will be made on a case-by-case basis.

Policies and Criteria Categories

- Customer Service, Service Area, Extension, and Service Ownership
- System Reliability, Security, and Emergency Response Measures
- Fire Protection
- Coordination with Other Utilities
- Water System Planning, Design and Construction
- Environmental Stewardship
- Water Use Efficiency
- Human Resources

3.5.7 Water Use Efficiency

Conservation policies summarize the District's responsibility to continue promoting programs that address water conservation and implement the use of the best available conservation technology.

Policy 7.1 – Water Use Efficiency

The District will continue implementation and enhancement of its current conservation programs. The District established a goal of one percent per equivalent residential unit (ERU) per year with adoption of the 1997 Water Comprehensive Plan. The program targeted a 15-year implementation period. Though the District far surpassed the 15-year goal, they continued their water conservation programs with a targeted reduction of 1 percent per year. The District has now far surpassed all previous conservation goals. As such, a new goal to maintain a 3-year average water use of 180 gallons per ERU was developed for this Plan (Chapter 5). Water conservation measures shall be consistent with, and strive to exceed, all local, state and federal laws and regulations.

Efforts may include, but are not limited to, public education, use of native and/or drought resistant landscaping, water conservation kit distribution, conservation rate structures, and leak detection and monitoring.

Policy 7.2 – Sustainable Development and Best Available Conservation Technology

The District supports code and policy development by overlapping jurisdictions that require the use of best available technology for water conservation on the demand side.

Examples of best available conservation technology include low-volume toilets, evapotranspiration-based irrigation scheduling, incorporation of cost-effective rainwater harvesting for non-potable uses, retention or removals and replacement of native soils or soils of equivalent quality in landscaped areas and other measures that demonstrate effective conservation strategies.

Policy 7.3 – Unaccounted for Water

The District will strive to minimize the quantity of unaccounted-for water.

Criterion 7.3.1 – Goals

The District will strive to maintain levels of unaccounted-for water at less than 10 percent of total usage.

Criterion 7.3.2 – Methods

This can be accomplished through a regular program of leak detection, meter testing, metering of main line flushing, and other appropriate measures.

Policies and Criteria Categories

- Customer Service, Service Area, Extension, and Service Ownership
- System Reliability, Security, and Emergency Response Measures
- Fire Protection
- Coordination with Other Utilities
- Water System Planning, Design and Construction
- Environmental Stewardship
- Water Use Efficiency
- Human Resources

3.5.8 Human Resources

The human resources policies summarize the District's commitment to providing for its employees a safe work environment, training, and certification opportunities.

Policy 8.1 – Drug and Alcohol-Free Workplace

The District is committed to providing a safe work environment for its employees, its customers and the public at large that is free from the harmful effects of substance abuse, as described in the Employee Manual.

Policy 8.2 – Employee Safety Management

The District is committed to providing safe and healthy working conditions at all facilities and complying with all rules, laws and regulations pertaining to the safety and health of the employees.

Criterion 8.2.1 – Responsibility

The District Manager and Safety Committee are responsible for compliance with all state and federal regulations as required by law and are integral parts of the Safety Program for the District.

Criterion 8.2.2 – Safety Manual

The District's Safety Manual will be replaced and revised as required by federal and state laws.

Criterion 8.2.3 – Procedures

The District has established General Rules of Safety to be observed at all times by all employees.

Policy 8.3 – Employee Training

The District encourages participation in workshops, seminars, and other education programs to improve job skills.

Policy 8.4 – Employee Certification

The District may pay fees and employee's time for the required certification testing, as well as required annual renewal fees.

THIS PAGE INTENTIONALLY BLANK.

Chapter 4 System Analysis

4.1 Introduction

This chapter identifies and documents the regulated monitoring requirements placed on the Lake Meridian Water District (District), a summary of recent water quality testing results, and a discussion of various water quality parameters and programs required by water quality regulatory agencies. Also included is a discussion of existing and anticipated rules that may have implications for the District, as well as recommendations for improvements to the District's water quality program.

Additionally, the hydraulic analysis results for the District's existing system, as well as for future scenarios, are discussed. The purpose of the hydraulic analysis was to evaluate the capacity and operational characteristics of the District's water distribution system. The analysis also includes the storage facilities to ensure adequate sizing for future growth based on both the District's criteria and the Washington State Department of Health's (DOH) regulations.

4.2 Water Quality Testing and Monitoring

This section describes the source of the District's water supply and provides an assessment of the water quality provided to customers. The goal of this section is to discuss the District's water quality testing and monitoring program with regards to Federal, State, and local guidelines.

The Washington State DOH and the U.S. Environmental Protection Agency (EPA) are responsible for regulating public water systems in the State of Washington. Under the provisions of the Safe Drinking Water Act (SDWA), the DOH has primary enforcement responsibility (primacy) for water quality control as delegated by the EPA. DOH must adopt drinking water regulations at least as stringent as Federal regulations to maintain this primacy.

The District's water system is classified as a Group A – Community Water System by DOH and is operated under System Number 41900B. As a Group A system, the District is responsible for monitoring and complying with all applicable SDWA and WAC regulations pertaining to source water and distribution system water quality.

The District's water sources currently are primarily from four District-owned wells and from an intertie with Covington Water District. The SE 288th Street Intertie between the District and Covington is used to bring Covington water into the District's system. These changes are further described in Chapters 1 and 6.

Water from the City of Auburn is chlorinated, but not fluoridated. This results in the introduction of non-fluoridated water into the District's system and non-fluoridated water to some of the District's customers. The water from the Covington Water District is supplied by the Regional Water System Supply (RWSS), which is fluorinated. A Blending Study was performed to assess the impacts of adding RWSS water to the District's system. The Blending Study is included in Appendix R.

The District's Wells 3, 5A, 6, and 9 each have a treatment system which includes filters for iron and manganese removal, chlorine generating systems and sodium fluoride injection systems. Wells 1, 2 and 4 are standby wells and are equipped to disinfect the water with sodium hypochlorite.

The District Board of Commissioners have shown a commitment to continuing long-term fluoride treatment for its customers.

All four of the District's primary production wells exhibit water quality issues that require treatment, primarily iron and manganese. Groundwater sources have naturally occurring minerals including iron and manganese. Normally dissolved, the iron and manganese form larger particulates when oxidized. Oxidation occurs when water becomes exposed to oxidants such as chlorine or air. Historically, the District injected a polyphosphate sequestering agent to control iron and manganese problems in the water supply from each of these wells. In conjunction with sequestering, the District used to blend its well sources with approximately 60% water from the Auburn supply. Extensive bench testing was completed in 1997 and 1998 to optimize sequestering dose rates and confirm the effectiveness of this strategy.

Filtration plants were added to Wells 3, 5A, 6, and 9 due to rising costs of purchasing water, labor costs, and customer service disruption impacts from flushing of watermains. The filtration plants oxidize and remove the suspended iron and manganese before the water enters the distribution system. By removing the iron and manganese, the District eliminated the need for polyphosphate sequestering and reduced service disruptions.

The District proceeded with design and construction of filtration plants in 2005 and completing all phases of the projects in early 2007. The projects were completed by two separate public works contracts and with funds from the Public Works Trust Fund. The filtration plants were designed around a package plant supplied by a local vendor, ATEC. Upgrades to the wells completed as part of the filtration projects included increasing the building sizes to accommodate the filtration vessels, installation of onsite chlorine generation equipment and telemetry upgrades. The filtration plants were designed with reclamation facilities with the target of recycling over 90% of the backwash water. A combination of onsite tanks and settling basins constructed below the floors of the filtration buildings were used. Well 3 and 5A use onsite tanks and Wells 6 and 9 use settling basins constructed under the filtration vessels. Monitoring of the filtration plants confirms that over 99% of the iron and manganese is removed.

The District began flushing their entire water system after the filtration plants came online. The intent was to clean the lines of as much of the particulate sediment as possible and to limit further incidents of dirty water complaints during such activities as flushing or fire flow demands. The District currently flushes their system every five (5) years, with the latest program anticipated to be completed in early 2022.

An ongoing system analysis is conducted to identify possible problem areas before a maximum contaminant level (MCL) violation occurs. Dead-end watermains are candidates for low chlorine residual as well as MCL violations. Valves that are turned down or off could cause stagnant water and flow problems. Tanks and water sampling stands need to be cleaned and/or inspected on a yearly basis at a minimum.

4.2.1 History of Water Quality Regulations

In 1974, Congress established the SDWA to safeguard the public from contaminants in public water systems and prevent contamination of groundwater supplies. The SDWA was amended in 1986 and again in 1996. The DOH is responsible for developing and administering State rules for the Federal requirements as the EPA adopts them.

The SDWA accomplishes its goal mainly by defining primary as well as secondary national contaminant-based drinking water standards. The SDWA defines a contaminant as including any physical, biological, chemical, or radiological substance. Primary standards address adverse health effects and are based on MCLs. Drinking water systems are required to meet MCLs or employ techniques to treat drinking water to protect the public from adverse health effects. Secondary standards have also been defined to principally address aesthetic issues, such as the odor and appearance of drinking water, and includes some inorganic chemical constituents. Secondary standards are enforced at the discretion of each state. Testing, record keeping, reporting, and timely notification of failure to meet applicable standards are required. Since being amended, the number of contaminants regulated under the SDWA grew from 23 in 1986 to 91 in 2001. The rules for monitoring, treatment and regulatory enforcement for these contaminants are developed by EPA in phases. Table 4-1 provides a summary of the amendments to the SDWA and the DOH regulations described in WAC 246-290.

Table 4-1
Regulatory Rules and Effective Dates

Rule	Parameters Regulated	Effective Date
Total Trihalomethane Rule	Concentrations of Four Trihalomethanes	November 1979
Phase 1 Rule	VOCs	January 1989
Total Coliform Rule	Bacteriological, Disinfection	December 1990
Surface Water Treatment Rule	Turbidity, Disinfection, Bacteriological, THMs	December 1990
Lead and Copper Rule	Lead, Copper	December 1992
Phase II, Phase V Rule	Inorganics, VOCs, SOCs	January 1993
Enhanced Surface Water Treatment Rule	Cryptosporidium, Giardia, Viruses	November 1998
Disinfection By-Products Rule	THMs, HAA5, Disinfectants	Stage 1 – November 1998
Consumer Confidence Reports	Not applicable	October 1999
Arsenic Rule	Arsenic	February 2002
Radon Rule	Radon	August 2003
Radionuclides Rule	Radionuclides (excluding radon)	December 2003

4.2.2 Water Quality Results

A summary of the more detailed water quality results for each of the active wells is provided in Appendix H. Below is a summary of the water quality parameters monitored by the District. The information in Table 4-2 is from the District's 2019 Consumer Confidence Report (CCR).

Table 4-2
2019 Consumer Confidence Report Lake Meridian Water District Contaminants

Parameter	MCLG	MCL	Level Found	Range Found	Violation	Date of Sample	Typical Source of Contaminant
Inorganic Contaminants							
Nitrate (ppm)	10	10	0.2	N/A	No	2019	Run off from fertilizer use; leaching from septic tanks, sewage
Chlorine (ppm)	NA	MRDL = 4	NA	0.35 – 1.55	No	2019	Treatment additive for disinfection
Copper (30 houses tested) ppm	1.3	AL = 1.3	0.094	N/A	No	2018	Corrosion of household plumbing systems, erosion of natural deposits
Lead (30 houses tested) ppb	0	AL = 0.015	N/A	<0.001	No	2018	Corrosion of household plumbing systems, erosion of natural deposits
Fluoride (substance) ppm	4	4	0.87	N/A	No	2019	Erosion of natural deposits; Water additive which promotes strong teeth
Disinfection Byproducts (ppb)							
Haloacetic Acids (HAA5) (ppb)	NA	60	11.47	ND – 11.47	No	2019	By-product of drinking water chlorination
Total Trihalomethanes (TTHM) (ppb)	NA	80	31.55	N/A	No	2019	By-product of drinking water chlorination
Microbiological Contaminants							
Total Coliform (positive samples/month)	0	Presence of coliform bacteria in 5% of monthly samples	0 of 264 samples taken	NA	No	2019	Naturally present in the environment
EPA Unregulated Contaminants							
Chlorate (ppb)	NA	NA	120	10 – 120	NA	2015	Disinfection Interaction
Strontium (ppb)	NA	NA	71	12 – 71	NA	2015	Natural Erosion

Table 4-2
2019 Consumer Confidence Report Lake Meridian Water District Contaminants (Cont.)

Parameter	MCLG	MCL	Level Found	Range Found	Violation	Date of Sample	Typical Source of Contaminant
Vanadium (ppb)	NA	NA	0.66	0.21 – 0.66	NA	2015	Natural Erosion
Hexavalent Chromium (ppb)	NA	NA	0.13	0.05 – 0.13	NA	2015	Natural Erosion
Covington Water District Contaminants							
Nitrate (ppm)	10	10	0.49	ND – 0.49	No	2019	Run off from fertilizer use; leaching from septic tanks, sewage
Chlorine (ppm)	NA	MRDL = 4	NA	0.09 – 1.82	No	2019	Treatment additive for disinfection
Fluoride (ppm)	4	4	Highest - 0.8 Average - 0.67	NA	No	2019	Erosion of natural deposits; Water additive which promotes strong teeth
Copper (ppm)	1.3	AL = 1.3	0.199	NA	No	2019	Corrosion of household plumbing systems, erosion of natural deposits
Lead (ppb)	0	AL = 15 ppb	2.10	NA	No	2019	Corrosion of household plumbing systems, erosion of natural deposits
Haloacetic Acids (HAA5) (ppb)	NA	60	16.54	LRAA 13.73 – 14.64	No	2019	By-product of drinking water chlorination
Total Trihalomethanes (TTHM) (ppb)	NA	80	29.28	LRAA 19.08 – 21.79	No	2019	By-product of drinking water chlorination

Table 4-2
2019 Consumer Confidence Report Lake Meridian Water District Contaminants (Cont.)

Parameter	MCLG	MCL	Level Found	Range Found	Violation	Date of Sample	Typical Source of Contaminant
Unit Descriptions							
Term	Definition						
ppm	ppm: parts per million, or milligrams per liter (mg/L)						
ppb	ppb: parts per billion, or micrograms per liter (µg/L)						
positive samples/month	positive samples/month: Number of samples taken monthly that were found to be positive						
NA	NA: Not applicable						
NR	NR: Monitoring not required but recommended.						
Important Drinking Water Definitions							
MCLG	MCLG: Maximum Contaminant Level Goal. The level of a contaminant in drinking water below which there is no know expected risk to health. MCLGs allow for a margin of safety.						
MCL	MCL: Maximum Contaminant Level. The highest level of a contaminant that is allowed in drinking water. MCLs are set as close to the MCLGs as feasible using the best available treatment technology.						
TT	TT: Treatment Technique. A required process intended to reduce the level of a contaminant in drinking water.						
AL	AL: Action Level. The concentration of a contaminant which, if exceeded, triggers treatment or other requirements which a water system must follow.						
MRDLG	MRDLG: Maximum Residual Disinfection Level Goal. The level of a drinking water disinfectant below which there is no known or expected risk to health. MRDLGs do not reflect the benefits of the use of disinfectants to control microbial contaminants.						
MRDL	MRDL: Maximum Residual Disinfectant Level. The highest level of a disinfectant allowed in drinking water. There is convincing evidence that addition of a disinfectant is necessary for control of microbial contaminants.						

4.2.3 Inorganic Chemicals and Physical Parameters

Monitoring requirements for Inorganic Chemicals (IOC) and physical properties are documented in WAC 246-290-300 (4). MCLs for inorganic chemicals and physical properties are documented in WAC 246-290-310 (3).

The DOH currently requires monitoring for inorganic chemicals and physical parameters from each groundwater source or well field every three years. Primary standards are based on health concerns, while secondary standards are based on aesthetic concerns. New sources are required to be in compliance with these secondary standards and also systems that have excessive customer water quality complaints.

In 2014, the District's wells met all the MCL requirements except for Chloromethane. The Department of Health (DOH) informed the District that they did not need to resample, and the District has not had an issue with Chloromethane since then. Prior to installing the treatment facilities at each well, the District would receive some aesthetic complaints relating to manganese and iron. Iron and manganese levels have been almost non-detectable since the treatment facilities were installed and the pipes cleaned.

The District's wells were last tested for inorganic chemicals in 2017 and met all MCL requirements.

4.2.4 Volatile Organic Chemicals (VOCs) and Synthetic Organic Chemicals (SOCs)

Monitoring requirements for Volatile Organic (VOC) and Synthetic Organic (SOC) Chemicals are documented in WAC 246-290-300 (7). MCLs are documented in WAC 246-290-310 (6). The District conducts organic chemical monitoring for 63 VOC contaminants and 11 SOC.

The District last tested for VOCs and SOCs in 2020. All samples were well below the MCL for all VOCs and SOCs. Testing for these contaminants will be conducted every 6 years.

4.2.5 Radionuclides

Natural occurrence levels of currently regulated radionuclides in Washington State water systems have generally been low, according to the DOH determination levels. As a result, many utilities have essentially been granted informal waivers for monitoring if previous sampling indicated low radionuclide levels.

Currently, the District's water samples must be monitored for radionuclides, with a requirement of two samples every six years. The District last tested for radionuclides in 2015. The District has collected the appropriate samples and is in compliance with the MCL for gross alpha particle activity of 15 pCi/L. No alpha particles were detected in the water from the District's wells.

4.2.6 Lead and Copper

Although lead and copper are inorganic elements, they have been given special consideration in water quality regulations. EPA developed a special Lead and Copper Rule (LCR) that addresses allowable lead and copper levels in the water supply. Lead and copper may be present in the source water, or they may leach into the water system as a result of water distribution piping or household plumbing system corrosion. State regulations for lead and copper monitoring are included in WAC 246-300 (5).

The District has performed the monitoring required for the LCR and is below the action levels set for lead and copper (0.015 mg/L for lead and 1.3 mg/L for copper). Specific corrosion control activities are not necessary at this time, based on the lead and copper results.

Since the implementation of the filtration plants, the District has discontinued the use of the polyphosphate sequestering agent. This may result in potential impacts to the lead and copper levels in the system, the District will continue to monitor their system for lead and copper levels.

4.2.7 Coliform

Under the Revised Total Coliform Rule (RTCR), utilities must develop a monitoring plan to collect representative samples of water throughout the distribution system. Monitoring frequency is based on the population served by the water utility.

The District's Coliform Monitoring Plan, included in Appendix I, includes collecting samples at 27 routine sites monthly. The District collects samples on a biweekly schedule, as further discussed below.

The MCL for coliform in drinking water is as follows:

E. coli MCL

An *E. coli* MCL violation occurs when:

1. A total coliform-present repeat sample follows an *E. coli*-present routine sample; or
2. An *E. coli*-present repeat sample follows a total coliform-present routine sample; or
3. The lab fails to test a total coliform-present repeat sample for *E. coli*.; or
4. A system fails to 3 repeat samples following an *E. coli*-present routine sample

Routine Sampling

Under the Washington State Board of Health Drinking Water Regulations for total coliforms, the number of samples a utility is required to collect each month to determine compliance under the TCR is based on population served (including resident and non-resident population). Based on the District's population, it is required to collect samples at 25 locations each month.

According to the Washington drinking water regulation WAC 246-290-480 (2.f.), the DOH must be notified:

- Within 10 days of the presence of coliform in a sample; and
- By the end of the day when the purveyor is notified by the laboratory for the presence of fecal coliform or *E. coli*.

Operational Responses to Unsatisfactory Samples

According to WAC 246-290-320, repeat samples must be collected whenever a sample is determined to be coliform positive. Within 24 hours of being informed by the laboratory of a coliform presence sample, a set of three repeat samples must be collected. One sample must be collected from the same sample site that the original coliform presence result came from. Plus, a sample must be taken from each of the additional repeat sites identified below.

Bacteriological Monitoring Locations

In addition to the routine sampling sites, three additional locations (repeat sites) must be identified for each routine site. The District's bacteriological monitoring locations are shown in Table 4-3 and Figure 4-1.

Table 4-3
Bacteriological Monitoring Locations

Site No.	Routine Sample	Repeat Sample
X1	150th Pl SE & SE 255th St	1-1. 25420 150th Pl SE
		1-2. 25514 150th Pl SE
X2	SE 250th St & 135th Ave SE (MVCC)	2-1. 13449 SE 250th Ct
		2-2. 13531 SE 250th St
X3	13904 241st St	3-1. 13842 SE 241st St
		3-2. 13921 SE 241st St
X4	27530 146th Ave SE	4-1. 27534 146th Ave SE
		4-2. 14517 SE 275th St
X5	24918 129th Pl SE	5-1. 12928 SE 250th St
		5-2. 24902 129th Pl SE
X6	26034 142nd Ave S	6-1. 26204 142nd Ave SE
		6-2. 26005 142nd Ave SE
X7	15400 278th St S	7-1. 15215 SE 278th St
		7-2. 15422 SE 278th St
X8	14116 SE 243rd St (MVCC)	8-1. 14204 SE 243rd St
		8-2. 14103 SE 243rd St
X9	128th Ave SE & SE 299th St	9-1. 12829 SE 299th St
		9-2. 12850 SE 299th St
X10	North Ridgeview	10-1. 12418 SE 286th St
		10-2. 12448 SE 286th St

Table 4-3
Bacteriological Monitoring Locations (Cont.)

Site No.	Routine Sample	Repeat Sample
X11	25423 123rd Pl SE	11-1. 25423 123rd Pl SE
		11-2. 12326 SE 255th St
X12	14041 SE 283rd Pl	12-1. 14057 SE 283rd Pl
		12-2. 14016 SE 283rd Pl
X13	24800 145th Pl SE	13-1. 24625 145th Pl SE
		13-2. 24800 145th Ln SE
X14	129th Ave & SE 261st St	14-1. 26125 129th Ave SE
		14-2. 12730 SE 261st Pl
X15	12648 282nd St SE	15-1. 12641 SE 282nd Way
		15-2. 12730 SE 282nd Way
X16	14452 SE 264th St	16-1. 14436 SE 264th St
		16-2. 14522 SE 264th St
X17	25506 142nd Ave SE	17-1. 25420 142nd Ave SE
		17-2. 14205 SE 255th Pl
X18	127th Ave SE & SE 268th St	18-1. 26630 127th Ave SE
		18-2. 12724 SE 268th St
X19	27708 128th Pl SE	19-1. 27714 128th Pl SE
		19-2. 27639 128th Pl SE
X20	12822 SE 241st St	20-1. 24046 SE 129th Ct
		20-2. 24028 129th Ct
X21	27401 137th Ave SE	21-1. 27339 137th Ave SE
		21-2. 27416 137th Ave SE
X22	157th Ave SE & SE 255th St	22-1. 25506 157th Ave SE
		22-2. 25514 157th Ave SE

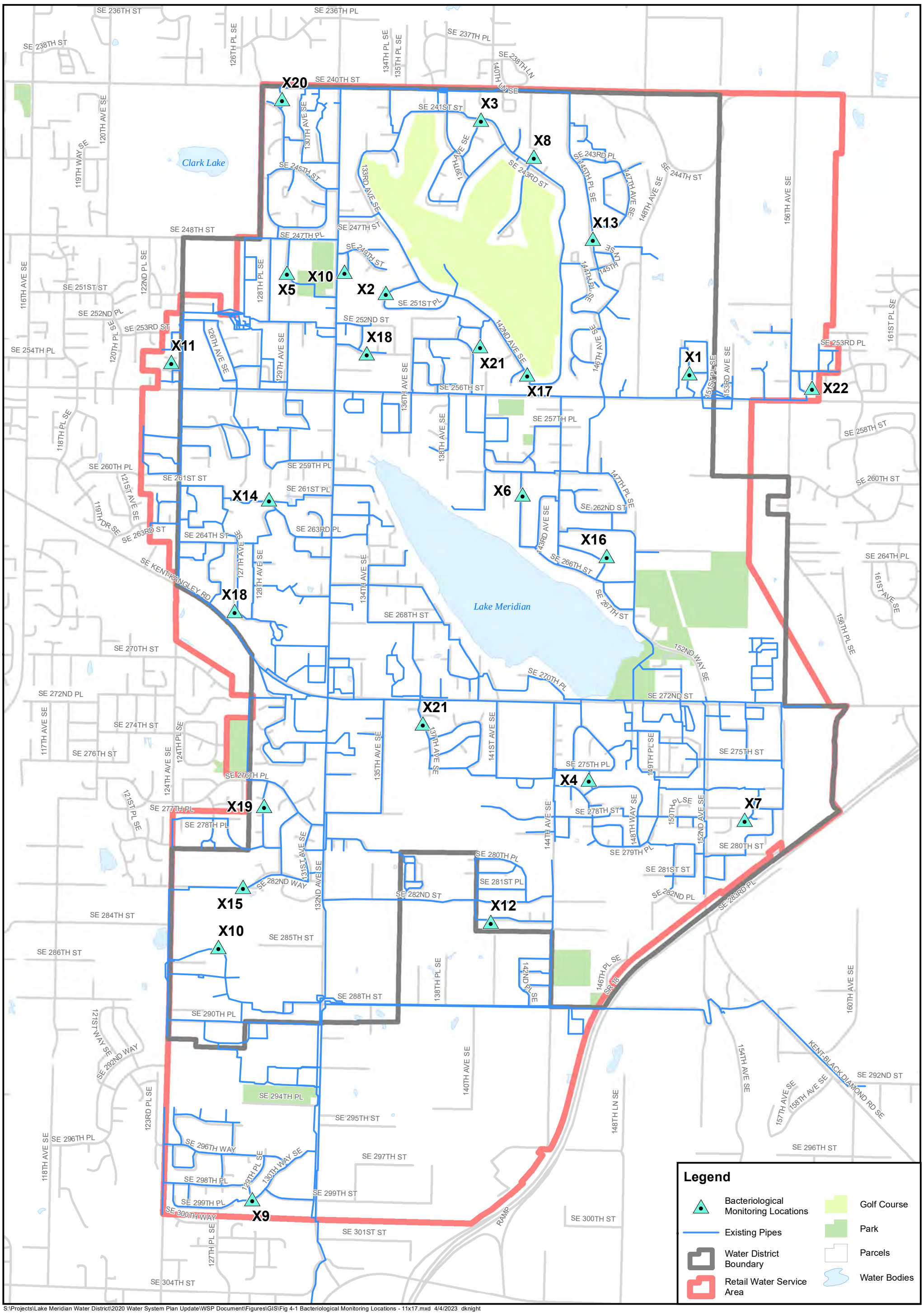

S:\Projects\Lake Meridian Water District\2020 Water System Plan Update\WSP Document\Figures\GIS\Fig 4-1 Bacteriological Monitoring Locations - 11x17.mxd 4/4/2023 dknight

King County GIS base data.
Data sources supplied may not reflect current or actual conditions. This map is a geographic representation based on available information. It does not represent survey data. No warranty is made concerning the accuracy, currency, or completeness of data depicted on this map.
BHC Consultants LLC., assumes no responsibility for the validity of any information presented herein, nor any responsibility for the use or misuse of the data.

0 750 1,500 Feet

N

Lake Meridian WATER DISTRICT

Bacteriological Monitoring Locations

2023 Water System Plan Update
Lake Meridian Water District
April 2023

Figure 4-1

COPYRIGHT © 2023 BHC CONSULTANTS LLC. ALL RIGHTS RESERVED

THIS PAGE INTENTIONALLY BLANK.

Flushing Options

If a sample with positive coliform has been confirmed, the sample will be taken again immediately before flushing of the sampling station. Chlorine samples will be taken before and after the sample station is flushed. The District will also take samples at 3 adjacent stations immediately upon confirmation of a positive coliform sample. If a low chlorine residual is found, appropriate measures should be taken to boost the chlorine in the system. WAC 246-290-320 prohibits batch or shock chlorination prior to the collection of repeat samples without prior authorization from the DOH. Recent activities within the area of the bad sample should be researched; it is possible a cross-connection may have taken place or the sample point may be contaminated. New construction or water draws may also cause problems. However, it should not be immediately assumed that the source water is contaminated.

4.2.8 Total Trihalomethanes (TTHMs) and Haloacetic Acids (HAA5)

Effective January 1, 2004, the District has been required to monitor for Disinfection By-products, specifically Total Trihalomethanes (TTHMs) and Haloacetic Acids (HAA5), per the WAC 246-290-300(7). Trihalomethanes (THM) result from the reaction of disinfectants in water, primarily chlorine and natural organic matter. THM regulations were developed to reduce the concentration of these compounds in the nation's water supply due to the carcinogenic effects of the regulated compounds. The purpose of THM monitoring is to assure that the District's water supply remains within the required MCLs for THMs. As a system using groundwater sources, the District is required to monitor its chlorinated sources for Maximum Total Trihalomethane Potential (MTTP). This is done by analyzing a sample of raw source water to determine its potential for forming THMs. One sample is required to be collected each year.

The District collects samples each year at Wells 3, 5A, 6, and 9. Samples are taken throughout the year per the monitoring schedule provided by the DOH. The last samples were collected in 2021. The MCLs for TTHMs and HAA5s are 80 ppb and 60 ppb, respectively. The District complies with the Disinfectants and Disinfection By-products Rule, as all measured TTHM and HAA5 concentrations for 2020 were below the respective MCLs.

4.2.9 Asbestos Monitoring

The District completed tests for the presence of specific sized asbestos fibers in the system in 1999. The test results indicated that there were no fibers above the detectable limits present in the samples collected and tested. Testing is required once every nine years.

4.2.10 Unregulated Chemical Monitoring

These chemicals include organic and inorganic compounds for which MCLs do not currently exist. The purpose of this additional monitoring is to gather information on the occurrence of these contaminants for which future regulation is possible.

The District performed sampling in 2019 for unregulated compounds at four well sites. None of these organic compounds were detected in any of the samples. The water quality results in Appendix H include the specific compounds and actual test results.

4.2.11 Perfluoroalkyl and Polyfluoroalkyl Substances (PFAS)

Perfluoroalkyl and Polyfluoroalkyl Substances (PFAS) refers to a family of synthetic chemicals that have been widely used in common consumer products and in industrial applications. According to Department of

Ecology's *PFAS Chemical Action Plan*, revised September 2022, nearly everyone in Washington State is likely exposed to PFAS through food, drinking water, and contact with disposable packaging. Epidemiological studies show a correlation between exposure to a prevalent non-polymer class of PFAS and negative health outcomes such as higher cholesterol levels, immune suppression, and lower birthweights. Higher exposure may also increase the risk of thyroid disease, kidney cancer, and testicular cancer.

Although rulemaking is in process, federal regulations have yet to be adopted for PFAS by the US Environmental Protection Agency (EPA). The Washington State Board of Health adopted State Action Levels (SALs) for five PFAS in 2021. These SALs, shown in Table 9 of WAC 246-290-315, were based on the best available data at the time of adoption. In June 2022, EPA released more stringent Health Advisory Levels (HALs) for four PFAS, three of which were subject to the initial state SALs. The HALs are temporary values until EPA concludes its expert review processes and proposes a standard. Until then, the existing SALs are used by DOH for regulating PFAS in public water systems.

Per Table 3 of WAC-246-300, all community and nontransient-noncommunity public water systems are required to take at least one PFAS sample on or before December 31, 2025 and a subsequent routine sample every three years. The District has conducted PFAS/PFOS sampling between 2018 and 2020 and plans to conduct a subsequent sample by 2025.

4.2.12 Other Substance Monitoring

Under the provisions of WAC 246-290-300 (10), the DOH can require additional monitoring of other substances. The WAC allows the DOH to take follow-up action when such a substance is detected.

4.3 Water Treatment and Filtration

The District currently injects chlorine and fluoride at each of the District's wells. The District uses onsite generators for sodium hypochlorite at its well facilities. The onsite generators were introduced as part of the filtration projects. The RWSS water bought through Covington Water District is chlorinated prior to entry into the District's system.

The District constructed facilities to provide filtration of iron and manganese of its groundwater sources. Filtration plants were placed into operation in 2007 at the District's Well Sites 3, 5A, 6, and 9 to remove iron and manganese, eliminating the need for polyphosphate sequestering.

4.4 Long-Term Water Quality Strategy

The District's filtration plants were placed into operation in 2007. The plants are removing over 99% of the iron and manganese from the source water. The District finished flushing their entire distribution system in 2008. The intent was to remove as much of the existing sediment from the system as possible.

The long-term water quality strategy will be based on the assumption that the majority of the water bought from Covington will be from their RWSS water. As part of adding this supply to the system, the District should conduct bench testing to assess any immediate impacts that may be a result of introducing this water into the system.

4.4.1 Fluoride

Currently all of the District's water well supply sources are fluoridated. In 2018, the District switched from the City of Auburn's water supply, which is not fluoridated, to the Covington Water District's RWSS water which is fluoridated.

4.4.2 pH Adjustment

The District has not exceeded any of the threshold levels of the lead and copper monitoring. The pH of the Covington water is compatible with the pH of the District's sources. Problems with non-compliance of the lead and copper levels are not anticipated. The District will continue to monitor its system for indications of non-compliance with lead and copper levels. Adjustments to pH, if necessary, would be done at the same site that fluoride additions are completed.

4.4.3 Future Water Quality Programs

District staff will continue to monitor the development of new or revised regulations for drinking water and the implications for the District's water system. Any changes in regulations that affect the District will be addressed in a timely manner.

4.5 Consumer Confidence Report

Under the SDWA, community water systems are required to provide an annual Consumer Confidence Report (CCR) on the source of its drinking water and levels of any contaminants found. The CCR must contain the following information:

- Information on the source of drinking water
- A brief definition of terms
- The maximum contaminant level goal (MCLG), the maximum contaminant level (MCL), and the level found if regulated contaminants are found
- Information on the health effects if a MCL is violated
- Information on levels of unregulated contaminants if required by EPA

4.6 Public Notification for Violations

The purpose of the Public Notification Rule is to direct utilities in providing customers with timely notification of an acute violation wherever one should occur. This section serves as an overview of the requirements. The public notification requirements are generally applicable to other contaminants, in addition to the RTCR. The RTCR has eliminated the acute and acute violations and replaced it with E-coli violations, and has changed the requirements for public notification. The EPA has published a Revised Public Notification Handbook (March 2010) with the specific notification instructions and example templates.

4.6.1 Key Contacts

The list of contact information can be found in Chapter 7, Maintenance and Operations.

4.6.2 Treatment Technique Violation (Tier 2)

A Tier 2 public notification is required when a treatment technique violation occurs. A treatment technique violation occurs when one of the following happens:

- The water system fails to conduct or fully complete a required Level 1 or Level 2 Assessment, as defined in the RTCR, within 30 days of the treatment technique trigger; or
- The system fails to correct sanitary defects, which are pathway for contaminants to enter the water system, by within the required timeframe

4.6.3 *E. coli* Violation (Tier 1)

A Tier 1 public notification is required when an *E. coli* violation occurs. *E. coli* violation occurs when one of the following happens:

- The water system fails to collect every routine sample
- The lab fails to test a coliform-present routine sample for *E. coli.*

4.6.4 Reporting Violation (Tier 3)

A Tier 3 public notification is required when a reporting violation occurs. A reporting violation occurs when one of the following happens:

- The water system fails to submit a monitoring report or completed assessment form to ODW on time; or
- The system fails to notify ODW of an *E. coli*-present sample on time

4.6.5 Public Notice Content

Pursuant to WAC 246-290-71002, public notices shall provide:

- A description of the violation or situation, including the contaminant and contaminant levels, if applicable
- When the violation or situation occurred
- Any potential adverse health effects (using standard health effects language from Appendix B of the Public Notification Rule or the standard monitoring language, see below)
- The population at risk, including subpopulations particularly vulnerable if exposed to the contaminant
- Whether alternative water supplies should be used
- What actions consumers should take, including when they should seek medical help, if known
- What the system is doing to correct the violation or situation
- When the system is expected to return to compliance
- The Purveyor's name, business address, and phone number
- A statement to encourage the notice recipient to distribute the public notice to other persons served using the standard language below

The purveyor may provide additional information to further explain the situation.

4.6.6 Public Notification Templates

The EPA in its Revised Public Notification Handbook (March 2010) has published templates that may be used for notification purposes in conformance with the requirements delineated above. It is strongly recommended that these templates be used. The following templates are some of those that are presented in the Revised EPA Handbook. The template numbers are per the Revised EPA Handbook.

- Fecal Coliform or *E. coli* Notice – Template 1-4 (Tier 1)
- Tier 1 "Corrected Problem" Notice – Template 1-6
- Unresolved Total Coliform Notice – Template 2-1 (Tier 2)
- Resolved Total Coliform Notice – Template 2-2

In addition to providing a template for format and content of the public notices, each template has a convenient summary of the procedures to be followed should a violation occur.

4.7 Facility Cleaning Plans

4.7.1 Reservoirs

The District currently has three reservoirs in service with a total nominal capacity of 4.15 million gallons. Table 4-4 shows their locations and the inspection and cleaning plan for each.

Table 4-4
Tank Location and Cleaning Plan

Name	Tank No. (size)	Address	Inspected
1200 Tank	2 MG Standpipe	25303 128th Avenue SE	Yearly
1100 Tank	0.15 MG Steel Elevated	25303 128th Avenue SE	Yearly
1300 Tank	2 MG Concrete Reservoir	25303 128th Avenue SE	Yearly

4.8 Water Sampling Stand Cleaning Plan

Water sampling stands need to be kept clean and maintained to prevent false positives from occurring during routine sampling. The following items are addressed as a part of the routine plan:

- Disinfect: Yearly or whenever a sample is positive for coliform
- Painting: Every three years or as needed
- Trim Brush: Yearly or as needed
- Replace Valves: Inspect yearly and replace as needed
- Piping and Hose: Inspect yearly and replace as needed
- Meter Box: Inspect yearly and clean as needed

4.9 Hydraulic Analysis

A comprehensive hydraulic analysis has been performed for the District's water system facilities. The purpose of the analysis was to evaluate the performance of the District's supply and storage facilities, transmission and distribution piping and other system components to ensure that the system will be able to meet DOH and District standards throughout the planning period. Results of the hydraulic analysis identify distribution system levels of service and deficiencies in meeting DOH and District standards. Subsequent modeling runs were performed to identify and validate improvements necessary to efficiently resolve the deficiencies. Selected system improvements necessary to resolve deficiencies are identified in the Capital Improvement Program (CIP) presented in Chapter 8.

The hydraulic analysis was performed for the existing conditions, 10- (2030) and 20-year (2040) scenarios. The following tasks were performed for each of these scenarios:

- Evaluate system performance compared to DOH and District criteria and identify deficiencies
- Identify and compare appropriate improvement alternatives
- Identify selected improvements to resolve deficiencies
- Document operational requirements, identified to resolve deficiencies and/or optimize system operations and levels of service

4.10 Hydraulic Model

A hydraulic computer model of the District's distribution system was used to perform the analysis. An existing model of the distribution system was updated specifically for this purpose.

Model updates include:

- Import the model to the NAD 1983 projected coordinate system
- Perform a check of the model piping configuration and update as necessary to correct existing and add new pipes
- Import County LIDAR-based topographic elevation data for node elevation data checks/updates
- Import additional County GIS base data for reference during the analysis and for preparation of report graphics
- Update pump and intertie operational controls
- Perform model calibration to field hydrant flow and pressure data collected by the District

The District's previous model was developed using H2OMAP version 5.0, by MWH Soft. The model was imported to InfoWater Suite version 11.5 by Innovyze and used for the hydraulic analysis described in this chapter. InfoWater is a GIS based hydraulic model and combines spatial analysis and diagnostic tools and mapping functions with sophisticated water distribution network modeling modules.

The hydraulic model performs simultaneous pressure and flow calculations throughout the distribution system piping under varying demand conditions and operational scenarios. It evaluates the interaction between system demand (including potential fire flows), supply, storage, pumping and distribution piping.

Steady state (static) analyses were performed to identify areas of low or high pressure and excessive velocities and/or pressure loss in pipes.

Extended Period Simulations (EPS) can also be performed to evaluate operational characteristics such as the relationship between pump station operations and reservoir levels over an extended (diurnal) period. GIS integration facilitates a graphical representation and interface with water distribution system facilities, pertinent base data, and analysis results. Pipes in the model can be color coded in supporting graphics to identify physical characteristics and to identify analysis results such as flow rates, velocities, and head losses. Node data such as elevation, hydraulic gradient, or pressure, etc., can similarly be graphically represented.

The model has been updated at regular intervals since its creation. Extensions and updates are accomplished by inputting construction record drawing data into the model. Operational data is updated as necessary, to be consistent with current District practices. Modeling data includes the following physical and operational characteristics:

4.10.1 Pipe Data

Piping data includes diameter, length, Hazen Williams “C” value, material, and status (open or closed). Pipe materials and “C” values typically are closely related. Simulation of closed valves is controlled in the model by closing pipes. Dead-end lines containing hydrants are typically simulated as part of this analysis to verify fire flow adequacy. Short lengths of dead-end lines without hydrants generally are not included unless they represent locally high or low elevation services. All looped portions of system piping are included in the model.

4.10.2 Node Data/System Demands

This includes node elevation and demand (average daily, maximum day, and peak hour). Node demands were assigned in the model based on the water demand calculations summarized in Chapter 2, and as described herein. System-wide demands were uniformly distributed amongst model nodes included with distribution system piping. Nodes associated with transmission piping (e.g., adjacent to pumps, storage facilities, and interties) do not have demands assigned to them. Large individual demands (identified by District billing records) are individually assigned to nodes representing those service locations. Limited elevation verification was performed prior to the hydraulic analysis; however, elevations were subsequently checked on nodes representing locations where model output indicated the highest and lowest system pressures. Figure 4-2 shows the topography within the District’s limits.

4.10.3 Fire Flow Requirements

Fire flow requirements are assigned in the model based on two categories:

- 1,000 gallons per minute (gpm) for single family residential structures for a period of 2 hours
- 3,000 gallons per minute (gpm) for non-single family residential structures for a period of 3 hours

The District individually evaluates non-single family residential projects to determine the level of fire flow that the system can provide. The District then determines if improvements can be made to the distribution system to increase available fire flow. System improvements that are required for a specific project will be the responsibility of the project developers. All improvements to the water system are subject to District approval and must be constructed to District Standards.

4.10.4 Pump Station Data

Pump stations with multiple pumps can be represented in the model. The software allows for pumps to be simulated either using pump curves or by defining a pump operating point (discharge flow rate and head). Actual pump curves are used for all pumps in the District's model. Pump status can be automatically controlled by operational conditions such as storage tank level or node pressure. Pump controls have been updated in the model for this analysis, to reflect current District operational settings.

4.10.5 Storage Facility Data

This data includes the physical configuration of the District's three storage tanks, including tank diameters, base, and overflow elevations. Initial water depths are also input for each storage facility and vary, based on the specific scenario analyzed.

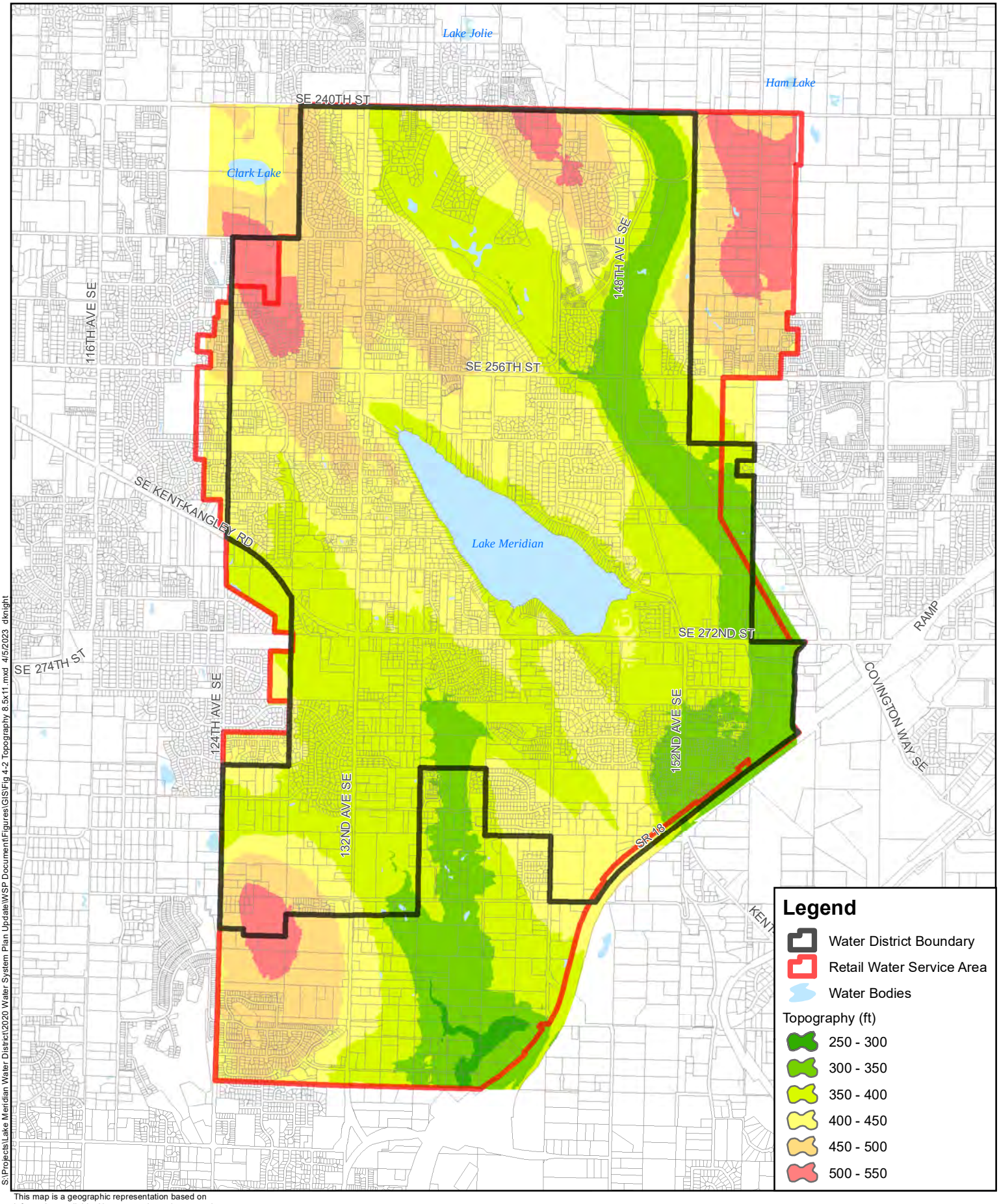

S:\Projects\Lake Meridian Water District\2020 Water System Plan Update\WSP Document\Figures\GIS\Fig 4-2 Topography 8.5x11.mxd 4/5/2023 dknight

This map is a geographic representation based on information available. No warranty is made concerning the accuracy, currency, or completeness of data depicted on this map.

bhc CONSULTANTS

0 1,250 2,500 Feet

N

Lake Meridian WATER DISTRICT

Topography

2023 Water System Plan Update
Lake Meridian Water District
April 2023

Figure 4-2

COPYRIGHT © 2023 BHC CONSULTANTS LLC. ALL RIGHTS RESERVED

THIS PAGE INTENTIONALLY BLANK.

4.10.6 Supply Data

Intertie supplies to the District's system are generally represented as either fixed gradient reservoirs (with the gradient matching the gradient of the supply zone) or nodes with a negative demand (supply to District), and flow control valves set to match the designated rate. Each of the District's active wells are represented in the model as a reservoir with a constant hydraulic grade line representing the groundwater elevation, connected to the respective well pump. Wells can be manually configured in the model to be active or inactive, or to be controlled by settings (such as tank levels), as mandated by the specific scenarios analyzed. The District's interties were modeled as nodes with negative demand (supply to District).

For the hydraulic analysis performed for this Comprehensive Plan, the following sources of supply were assumed to be active for the scenarios analyzed:

Current (2019) Scenario

Wells 3, 5A, 6, and 9.

Auburn supply is inactive.

The intertie agreement with Covington Water District provides for a minimum of 0.75 MGD and at the District's option, up to a maximum of 1.0 MGD for the time period of October 1st through May 31st and a minimum of 1.0 MGD and at the District's option, up to a maximum of 1.2 MGD for the time period of June 1st through September 30th. This supply uses the existing 16-inch transmission main in SE 288th Street, supplying water to the proposed higher gradient zone in the southwest portion of the distribution system. The Covington intertie currently supplements the well supply to the District's 594 Zone, thorough the PRV located at 132nd Avenue SE and SE 288th Street. In the hydraulic model, the Covington intertie supplies 694 gpm in the maximum day demand (MDD) scenario, representing peak summer flow of 1 MGD from the intertie, and 620 gpm in the average daily demand (ADD) scenario, representing the average flow rate from the intertie in 2019.

2030 and 2040 Scenarios

Wells 3, 5A, 6, and 9.

The new reservoir (1400 Tank) is added in the southwest portion of the District. The tank will be filled with via the Covington Water District Supply via the Arthur Jacobson Elementary School line.

The 2040 scenario also includes piping updates to better convey flow to the 1400 reservoir.

4.10.7 Model Calibration

Calibration of a hydraulic model is periodically necessary to provide a measure of assurance that the model accurately and realistically represents the actual water system. The District's water system model was calibrated using flow and pressure data obtained from hydrant flow tests conducted in July 2015. Hydrant tests are performed to impose a large demand on the water system and identify the corresponding drop in system pressure. Flow from the hydrant(s) is recorded and pressure at adjacent locations is monitored before, during, and after the flow test. Model settings are adjusted to replicate system conditions at the time, including overall system demand, flow at the tested hydrant location, supply rates, pump status, and reservoir levels. Calibration is then performed by adjusting model settings to match system operating conditions, imposing a point demand in the model at the location(s) of the hydrant flows and running the

model to identify the simulated pressure drop associated with the hydrant flow. Simulated pressure drops are compared to the corresponding pressure drops observed in the field and the model is adjusted until a reasonable match is achieved.

Simulated pressure losses occurring in lengths of pipe and various fittings are controlled by the Hazen-Williams 'C' values assigned to the model piping, that determines the amount of friction encountered by water flowing through the pipes. Calibration is achieved primarily through adjustment of these 'C' values. Friction losses through valves are typically accounted for separately in the model, by assigning minor loss coefficients (k-values) to each valve. 'C' values assigned to the pipes in the modeled system are adjusted throughout the calibration process until model output best approximates the values observed in the field. The calibration resulted in 'C'- values between 123 and 145 throughout the system. These friction factors are typical values for most pipe and are representative of 'C' values for similar pipe types and ages throughout the country.

'C' values can vary based on pipe material, age, and diameter and often are categorized based on these parameters. Locations of the hydrant tests were therefore determined to identify 'C' values separately for the Ductile Iron (DI), Cast Iron (CI), and Asbestos Cement (AC) piping that comprises the District's distribution system. Other factors that can affect model calibration are improper distribution of system demands and unknown or improperly defined conditions within the District's piping system, such as incorrect elevations or partially or fully closed valves that were not previously identified.

The calibration process, testing results, and 'C' value adjustments are summarized in Appendix S.

4.11 Evaluation of Distribution System

After updating system demand scenarios and operational settings and model calibration, the model was used to perform a comprehensive evaluation of the distribution system. The evaluation consists of performing a series of model simulations, under varying system demands and operational parameters, to determine compliance with criteria set forth in Chapter 3.

Operational parameters that are manipulated include initial tank levels, pump status and settings, status of valves, and various piping configurations, as necessary. System minimum and maximum pressures, fire flow residual pressures, and maximum velocities are all analyzed to determine compliance with the specified criteria. Where model results identify deficiencies in meeting the criteria, alternative system improvements are determined, input to the model, and analyzed to verify compliance. A general discussion of the analysis for each scenario, as well as identified deficiencies and related improvements is discussed herein. Recommended improvements are summarized in the Capital Improvement Program in Chapter 8.

4.11.1 2019 System Analysis

The 2019 analysis uses the existing distribution system configuration and 2019 ADD, MDD, and PHD scenarios. Reservoir settings for the analyses are determined based on existing equalizing, fire flow, and standby storage volume requirements (discussed in the Storage Analysis section). Pump status is based on standard District operational procedures and modified to comply with DOH requirements for emergency operations. The Covington intertie supplies a constant 0.9 MGD for the 2019 ADD and 1.0 MGD for MDD and PHD system analysis.

Minimum Pressure Analysis

Minimum pressures in the distribution system are determined based on PHD conditions, with reservoir levels set at the bottom of their respective equalizing ranges. Operational and equalizing storage levels are based on the 2019 storage analysis.

Minimum pressures below the 30 psi criteria occur at three locations in the distribution system. The locations are at Auburn Mountainview High School, SE 240th Street at 142nd Avenue SE and just northwest of the tank site. These locations are illustrated in Figure 4-3 and also coincide with higher elevation areas shown in Figure 4-2. Small dynamic pressure losses have only minimal impact on these areas of low pressure. The relatively high ground elevation compared to the hydraulic gradient is the primary factor resulting in pressures ranging down to 27 psi at services represented in these areas. The proposed pressure rezone will increase the hydraulic gradient to mitigate low minimum pressures in all three of these locations in the District, as well as in other areas which fell within the 30-40 psi range for minimum pressure.

Transmission mains having no service connections are required to maintain at least 5 psi during non-emergency demand conditions, except when directly adjacent to storage reservoirs. Pressures in transmission mains are greater than 5 psi throughout the distribution system, and therefore meet the minimum pressure criteria.

Minimum service pressures must also be greater than 20 psi during PHD conditions, with storage levels set to the bottom of the standby storage with the largest source of supply out of service. Analysis results indicate that all service pressures meet this criterion.

Maximum Pressure Analysis

Maximum pressures in the distribution system are determined based on minimum demand conditions, with reservoir levels full. Well supplies are off for this condition, based on their reservoir level-based controls.

Maximum pressures above the 110 psi criteria occur at two locations in the eastern portion of the distribution system., The locations are SE 272nd Street west of 152nd Place SE and along the transmission main along SE 288th Street These locations are illustrated in Figure 4-4 and also coincide with lower elevation areas identified in Figure 4-2. Increasing the high-pressure criteria to 115 psi resolves this issue.

Fire Flow Analysis

The distribution system is required to provide the fire flow rates identified in Section 4.10.3 while maintaining 20 psi residual pressure to all services during MDD conditions. The 8 ft/sec maximum velocity criteria must also be met in distribution piping during fire flow conditions. The fire flow requirements throughout the District are shown in Figure 4-5. System-wide fire flow analyses were therefore performed for the following conditions:

- 1,000 gpm fire flows were simulated in single-family zoned areas.
- 3,000 gpm simulations were simulated for commercial and multifamily zoned areas. These 3,000 gpm rates are occasionally split between three hydrants in the model, assuming a 1,000-gpm maximum rate available for an individual hydrant.

THIS PAGE INTENTIONALLY BLANK.

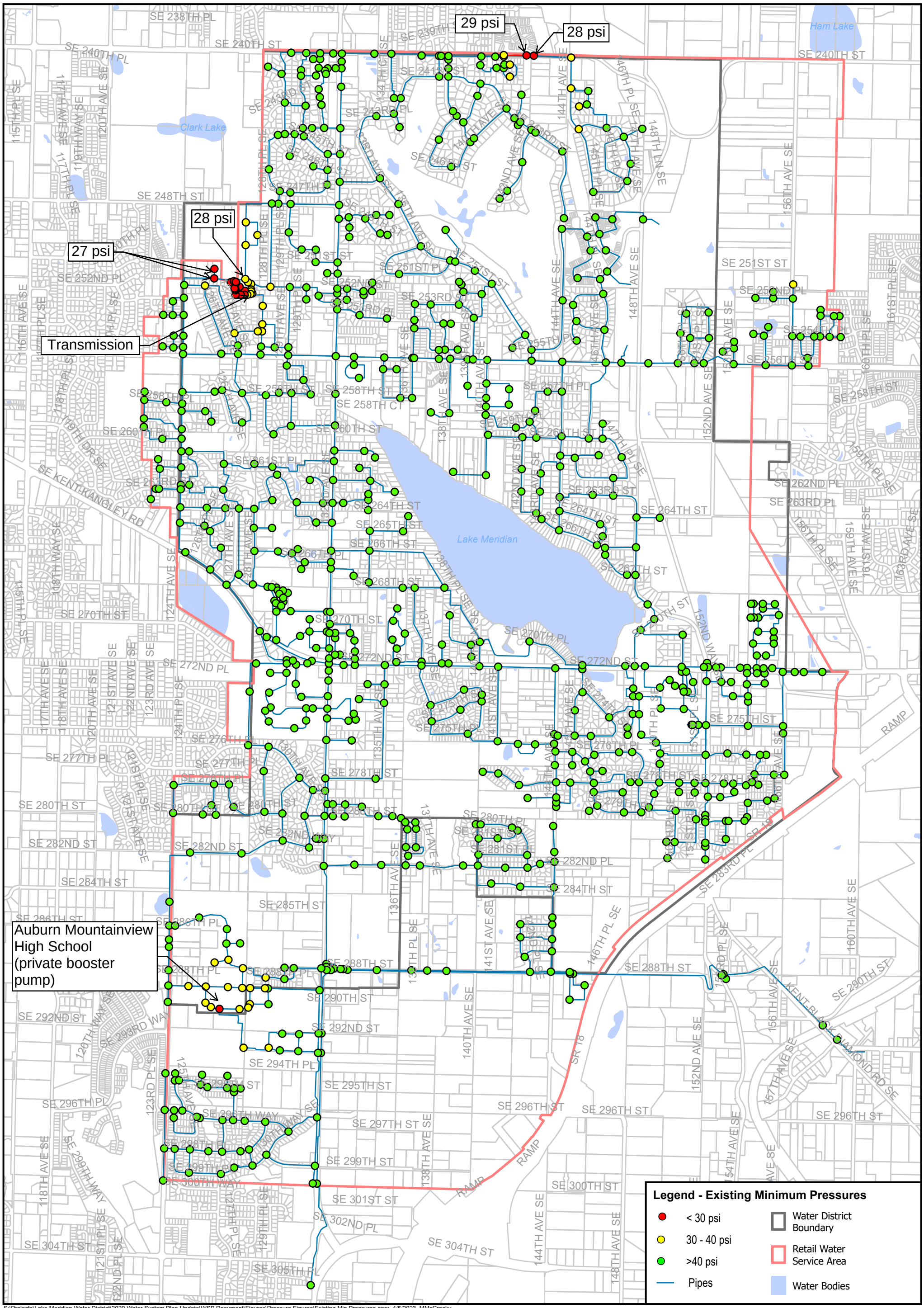

S:\Projects\Lake Meridian Water District\2020 Water System Plan Update\WSP Document\Figures\Pressure Figures\Existing Min Pressures.aprx 4/5/2023 MMcCrosky

King County GIS base data.
Data sources supplied may not reflect current or actual conditions. This map is a geographic representation based on available information. It does not represent survey data. No warranty is made concerning the accuracy, currency, or completeness of data depicted on this map.
BHC Consultants LLC., assumes no responsibility for the validity of any information presented herein, nor any responsibility for the use or misuse of the data.

0 750 1,500 Feet

N

Existing Minimum System Pressures

2023 Water System Plan Update
Lake Meridian Water District
April 2023

Figure
4-3

COPYRIGHT © 2021 BHC CONSULTANTS LLC. ALL RIGHTS RESERVED

THIS PAGE INTENTIONALLY BLANK.

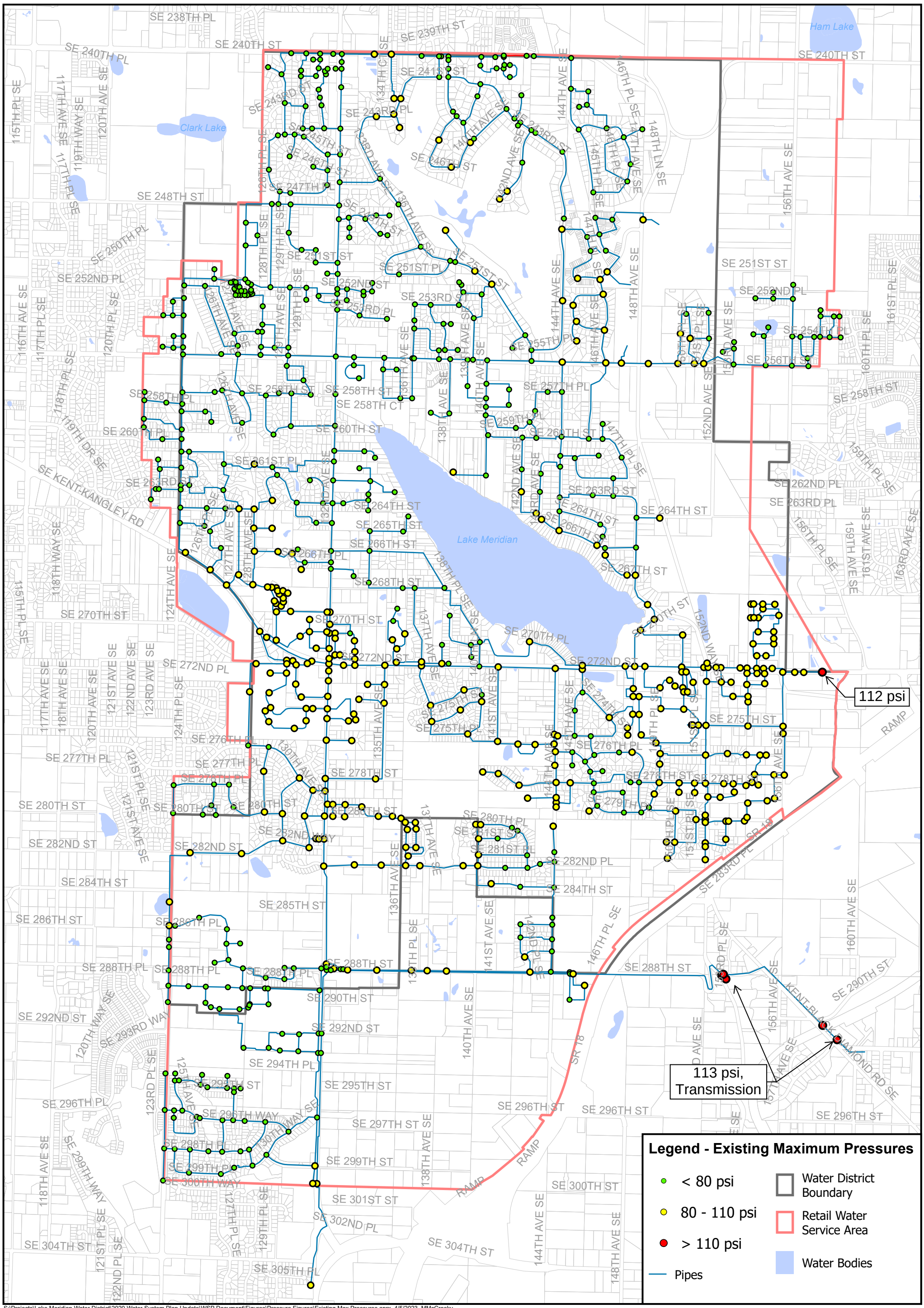

S:\Projects\Lake Meridian Water District\2020 Water System Plan Update\WSP Document\Figures\Pressure Figures\Existing Max Pressures.aprx 4/5/2023 MMcCrosky

King County GIS base data.
Data sources supplied may not reflect current or actual conditions. This map is a geographic representation based on available information. It does not represent survey data. No warranty is made concerning the accuracy, currency, or completeness of data depicted on this map.
BHC Consultants LLC., assumes no responsibility for the validity of any information presented herein, nor any responsibility for the use or misuse of the data.

bhc CONSULTANTS

0 750 1,500 Feet

N

Lake Meridian WATER DISTRICT

Existing Maximum System Pressures

2023 Water System Plan Update
Lake Meridian Water District
April 2023

Figure
4-4

COPYRIGHT © 2021 BHC CONSULTANTS LLC. ALL RIGHTS RESERVED

THIS PAGE INTENTIONALLY BLANK.

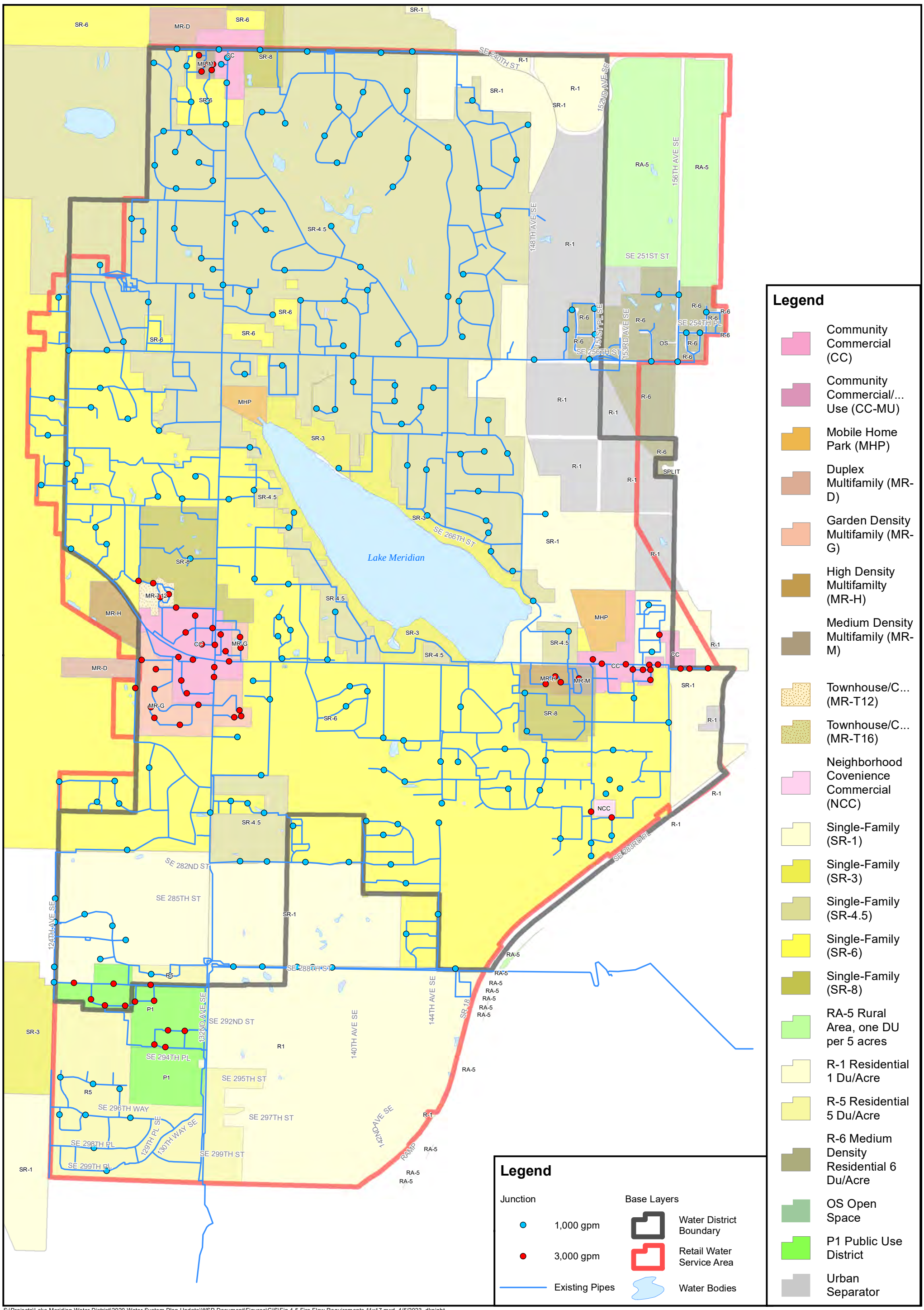

S:\Projects\Lake Meridian Water District\2020 Water System Plan Update\WSP Document\Figures\GIS\Fig 4-5 Fire Flow Requirements 11x17.mxd 4/5/2023 dknight

King County GIS base data.
Data sources supplied may not reflect current or actual conditions. This map is a geographic representation based on available information. It does not represent survey data. No warranty is made concerning the accuracy, currency, or completeness of data depicted on this map.
BHC Consultants LLC., assumes no responsibility for the validity of any information presented herein, nor any responsibility for the use or misuse of the data.

bhc CONSULTANTS

0 750 1,500 Feet

N

Lake Meridian WATER DISTRICT

Fire Flow Requirements

2023 Water System Plan Update
Lake Meridian Water District
April 2023

Figure 4-5

COPYRIGHT © 2023 BHC CONSULTANTS LLC. ALL RIGHTS RESERVED

THIS PAGE INTENTIONALLY BLANK.

All fire flow analyses are simulated in conjunction with the MDD scenario, per DOH requirements. The model performs fire flow analyses by applying the specified flow individually in turn to each node identified for the analysis. For 3,000 gpm flow rates, if the simulation results do not meet residual pressure criteria the fire flows are manually re-simulated, assigning 1,000 gpm each to three adjacent node/hydrant locations. This is because the model cannot automatically split the fire flow rate between multiple hydrants as part of its analysis routine. In addition, the fire flow analyses performed by the model are only able to identify residual pressures, not velocity. The residual pressure is checked, per DOH criteria, during manual simulation of fire flow rates. The process of checking fire flow velocities is expedited, however, by knowing that certain pipe configurations convey adequate fire flow rates with acceptable velocities. For example, a 6-inch dead-end line will not convey a 1,000-gpm flow rate without violating the velocity criteria, but an 8-inch dead-end line will. More complicated looped systems requiring a 3,000-gpm flow rate may require more scrutiny. However, only limited areas within the distribution system require a 3,000-gpm flow rate as compared to the 1,000-gpm flow rate.

Analysis results indicate that generally the system gradient and capability to convey fire flow rates is adequate, typically resulting in acceptable residual pressures. The required improvements are due to excessive velocities during fire flow simulation. Figure 4-6 graphically shows the locations with fire flow deficiencies for both the 1,000 gpm and the 3,000 gpm fire flows. In some instances, moderately excessive velocities resulting from larger fire flow rates were allowed for short lengths of piping, consistent with DOH criteria.

Maximum Velocity Analysis

A model simulation has been performed during PHD conditions, with all wells running and the pump station operating, to identify any pipe velocities exceeding the specified criteria. No excessive system pipe velocities were identified under these conditions, aside from pump station piping which is considered to be acceptable. Only the previously discussed fire flow conditions produced excessive velocities requiring system improvements.

4.11.2 2040 Scenario Analysis

The 2040 analysis involves modification of the 2019 model to simulate 2040 ADD, MDD, and PHD scenarios. All potential system improvements identified by the 2019 hydraulic analysis are included in the 2040-year model. Reservoir settings are based on the 2040 equalizing, fire flow, and standby storage levels. Pump status is unchanged from the 2019 analysis. Additionally, the 2040 model includes the addition of a new 3 MG reservoir next to Auburn Mountainview High School, removal of the existing T1100 tank, and four new pressure zones with higher hydraulic grade lines than the existing pressure zone. See Figure 4-10 for a map of the proposed new pressure zones.

Minimum Pressure Analysis

Minimum service pressures were examined during PHD conditions with reservoir levels set to the bottom of their respective equalizing levels. Operational and equalizing storage levels were based on a 2040 storage analysis. During peak hour demands in this scenario, some service connections near the existing tank site experienced low pressures; however, pressures at these connections still exceeded the 30-psi criterion. Thus, no additional pressure deficiencies resulted from model simulation of this scenario.

THIS PAGE INTENTIONALLY BLANK.

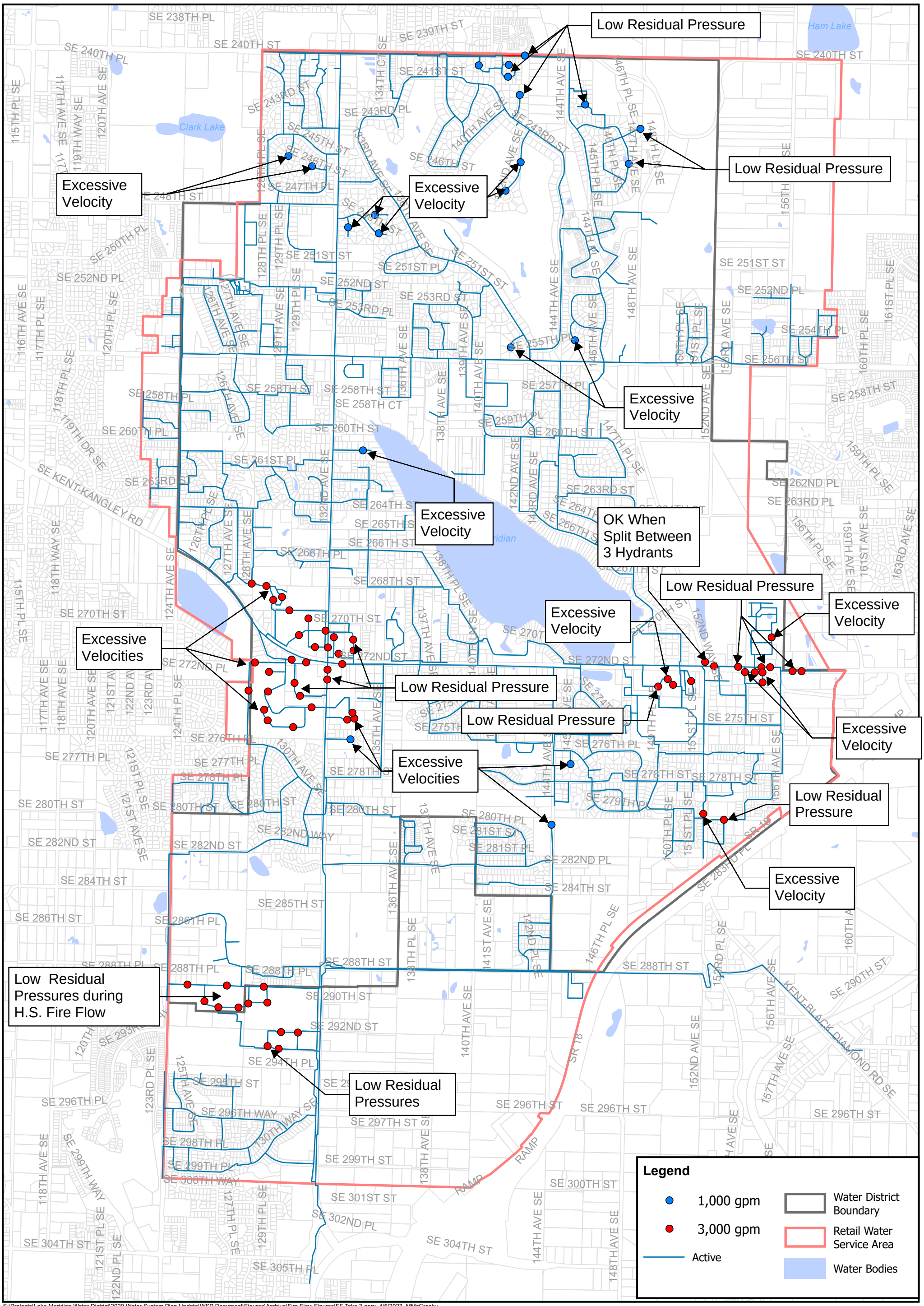

S:\Projects\Lake Meridian Water District\2020 Water System Plan Update\WSP Document\Figures\Archive\Fire Flow Figures\FF Take 3.aprx 4/5/2023 MMcCrosky

King County GIS base data.
Data sources supplied may not reflect current or actual conditions. This map is a geographic representation based on available information. It does not represent survey data. No warranty is made concerning the accuracy, currency, or completeness of data depicted on this map.
BHC Consultants LLC., assumes no responsibility for the validity of any information presented herein, nor any responsibility for the use or misuse of the data.

0 750 1,500 Feet

N

Existing Fire Flow Deficiencies
2023 Water System Plan Update
Lake Meridian Water District
April 2023

Figure
4-6

COPYRIGHT © 2021 BHC CONSULTANTS LLC. ALL RIGHTS RESERVED

THIS PAGE INTENTIONALLY BLANK.

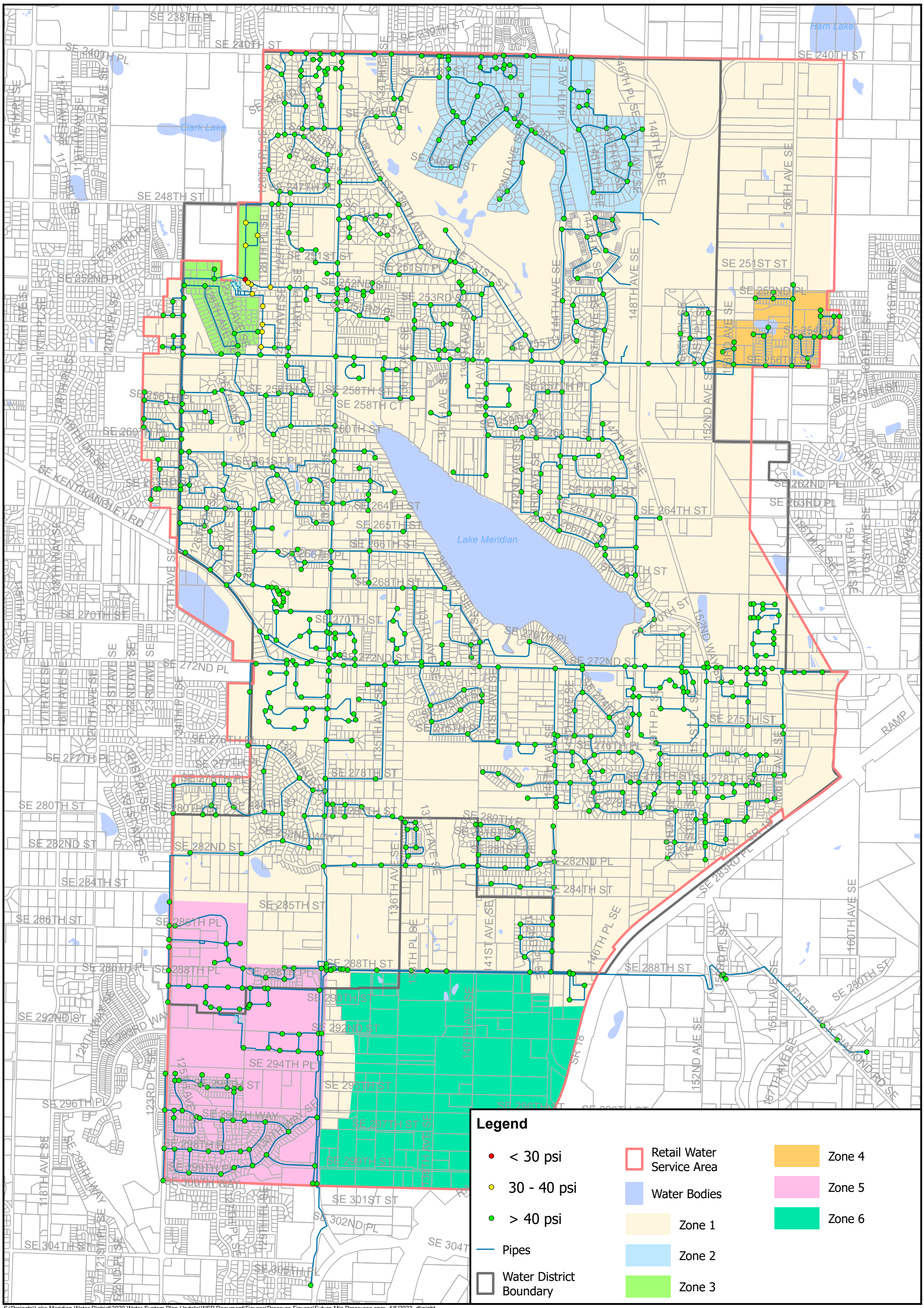

S:\Projects\Lake Meridian Water District\2020 Water System Plan Update\WSP Document\Figures\Pressure Figures\Future Min Pressures.aprx 4/5/2023 dknight

King County GIS base data.
Data sources supplied may not reflect current or actual conditions. This map is a geographic representation based on available information. It does not represent survey data. No warranty is made concerning the accuracy, currency, or completeness of data depicted on this map.
BHC Consultants LLC., assumes no responsibility for the validity of any information presented herein, nor any responsibility for the use or misuse of the data.

0 750 1,500 Feet

N

2040 Scenario with Improvements
Minimum System Pressure

2023 Water System Plan Update
Lake Meridian Water District
April 2023

Figure
4-7

COPYRIGHT © 2023 BHC CONSULTANTS LLC. ALL RIGHTS RESERVED

THIS PAGE INTENTIONALLY BLANK.

Transmission mains having no service connections are required to maintain at least 5 psi during non-emergency demand conditions, except when directly adjacent to storage reservoirs. Pressures in transmission mains are greater than 5 psi throughout the distribution system, and therefore meet this criterion.

Maximum Pressure Analysis

Maximum pressures in the distribution system are determined based on minimum demand conditions, with reservoir levels full. Well supplies are off for this condition, based on their reservoir level-based controls.

The 2040 model with the 2019 model upgrades applied had several locations with pressures above 110 psi due to the creation of new pressure zones using booster pumps. Increasing the maximum pressure criterion to 115 psi reduces the number of high-pressure locations to the areas with the lowest elevations in Zone 2, as shown in Figure 4-8. To reduce pressures at lower elevations while maintaining high enough pressures in the rest of Zone 2, PRVs will need to be installed at homes in these areas as part of the rezoning.

Fire Flow Analysis

The fire flow analysis was simulated under the conditions described in the 2019 scenario. Fire flow pumps will be needed for three of the new pressure zones. These pumps were modeled to determine appropriate design settings. Zone 5 will not need a fire flow pump given that the new reservoir will supply enough pressure within the zone.

Maximum Velocity Analysis

Using the same approach described in the 2019 analysis, the model run for this scenario confirmed that maximum velocities are not exceeded and therefore no improvements are required.

4.11.3 Storage Analysis

The sources for the 2019 scenario include the District's wells and purchase of Covington water. The 2019 analysis was performed using the amount of water that the District is contracted to buy from Covington as of 2020. The total contracted water right for the maximum instantaneous flow rate from the wells is 1,925 gpm. The entire District is in the same pressure zone, and storage is provided by the three tanks described in the existing facilities section within this Plan. The tanks include T1100 (0.15 MG elevated), T1200 (2 MG steel standpipe), and T1300 (2 MG concrete tank).

Dead Storage

Dead storage is the volume of stored water that is not available to customers and instead maintains system design pressures per WAC 246-290-230(5) and (6). Tank T1300 has no dead storage as its contents are pumped to fill tanks T1100 and T1200. For the 2019 analysis, dead storage in tanks T1100 and T1200 was determined by taking the maximum surface elevation within the District of 526.25 feet above Mean Sea Level (MSL) and adding 20 psi, or 46.2 feet of head to meet the minimum pressure criterion for the highest point in the District. The dead storage level in each tank was calculated by subtracting each tank's base elevation from the maximum required head value.

THIS PAGE INTENTIONALLY BLANK.

Max Pressure ~ 112 psi
Increased Pressure at Low Elevations Due to Rezoning
Will Require Individual Pressure Reducing Valves

Transmission

Legend

- < 80 psi
- 80 - 110 psi
- > 110 psi
- Pipes
- Water District Boundary
- Retail Water Service Area
- Water Bodies
- Zone 1
- Zone 2
- Zone 3
- Zone 4
- Zone 5
- Zone 6

S:\Projects\Lake Meridian Water District\2020 Water System Plan Update\WSP Document\Figures\Pressure Figures\Future Max Pressures.aprx 4/5/2023 MMcCrosky

King County GIS base data.
Data sources supplied may not reflect current or actual conditions. This map is a geographic representation based on available information. It does not represent survey data. No warranty is made concerning the accuracy, currency, or completeness of data depicted on this map.
BHC Consultants LLC., assumes no responsibility for the validity of any information presented herein, nor any responsibility for the use or misuse of the data.

0 750 1,500 Feet

N

2040 Scenario with Improvements Maximum System Pressure

2023 Water System Plan Update
Lake Meridian Water District
April 2023

Figure **4-8**

COPYRIGHT © 2021 BHC CONSULTANTS LLC. ALL RIGHTS RESERVED

THIS PAGE INTENTIONALLY BLANK.

Operational Storage

Operational Storage is the volume of the reservoir devoted to supplying the water system while, under normal operation conditions, the source(s) of supply are in "off" status. This volume is dependent upon the sensitivity of the reservoir water level sensors and the tank configuration necessary to prevent excessive cycling of source pump motors. This value was calculated for the District's system as the volume in T1100 and T1200 between the overflow levels and the level where the transfer pumps are called to supply water from T1300 to keep the other tanks full. Operational Storage is in addition to other storage components, thus providing a factor of safety for equalizing, standby, and fire suppression components.

Equalizing Storage

Equalizing Storage is the volume of water needed to satisfy the peak hour demand, while maintaining a minimum system pressure of 30 pounds per square inch (psi). The volume of Equalizing Storage required depends on peak system demands, the magnitude of diurnal water system demand variations, the source production rate, and the mode of system operation. Sufficient Equalizing Storage must be provided in combination with available water sources and pumping facilities such that peak system demands can be satisfied. A common method for determining Equalizing Storage requirements can be calculated using the following equation from the DOH Water System Design Manual:

$ES = (PHD - Q_S)\ (150 \text{ minutes})$

Where:
ES = Equalizing Storage (gallons)
PHD = Peak hourly demand (gpm)
Q_S = Total source of supply capacity, excluding emergency sources (gpm)

This method was used in determining the Equalizing Storage requirements for the District. To increase reliability in the system, the Covington Supply, which is the largest supply of water during the summer months, was considered to be out of service.

The Equalizing Storage analysis used the following well supply rates:

Well 3:	400	gpm
Well 5A*:	75	gpm
Well 6:	650	gpm
Well 9:	800	gpm
Total:	1,925	gpm

*Only 75 gpm out of the 275-gpm maximum Qi was used to not exceed the District's overall water rights of 1,925 gpm.

Standby Storage

Standby storage provides a backup supply of water when the District's sources are unavailable. For multiple source systems the standby storage volume is determined by starting with the maximum day demand (MDD) for the system and subtracting inflows if they meet the criteria outlined DOH Water System Design Manual. For the 2019 scenario the system does not meet any of the requirements which would allow a reduction of Standby Storage, therefore the Standby Storage for the District is equal to the MDD of 2.93 MG. This falls above the Standby Storage needed to meet a demand of at least 200 gpd per ERU per

DOH recommendations for minimum Standby Storage. The District provides Standby Storage volume entirely in the T1300 tank, which is delivered to the system and other tanks by the transfer pumps. The transfer pumps supply water at a rate sufficient to keep the levels in the other tanks from dropping.

Fire Flow Storage

Per design criteria in Chapter 3, the largest fire flow provided by the system is 3,000 gpm for three hours. Standby Storage and Fire Flow Storage are stacked in the District's system; therefore, all of the other storage volumes are assumed to be expended before fire flow storage. The depletion of operational storage lowers Tanks 1100 and 1200 to the level where the transfer pumps for T1300 are activated. The equalizing and standby volumes are then depleted from T1300 as described above. During the fire flow analysis, a portion T1300 is depleted at a rate of 1,100 gpm for three hours, which is the maximum combined pumping rate for the transfer pumps. The balance of the fire flow, 1,900 gpm for three hours, is depleted from Tanks 1100 and 1200.

2019 Storage Analysis Results

The results of the 2019 Storage Analysis are presented in Table 4-5. A schematic showing the tank levels that these volumes correspond to are shown in Figure 4-9.

While the actual sizes of tanks T1100, T1200, and T1300 are 0.15 MG, 2 MG, and 2 MG, respectively, the total effective capacity reflects the actual size of each tank less that tank's dead storage, reflecting the usable capacity within the tank. As shown in the table below, there is an overall storage deficit in the system when accounting for dead storage to meet the pressure criterion at the highest service location in the district.

Table 4-5
2019 Storage Analysis

Tank	Dead Storage (MG)	Operational Storage (MG)	Equalizing Storage (MG)	Standby Storage (MG)	Fire Flow Storage (MG)	Total Required (MG)	Total Effective Capacity (MG)	Surplus (MG)
T1100	0.01	0.12	0.00	0.00	0.03	0.15	0.14	-0.01
T1200	1.42	0.35	0.00	0.00	0.31	0.66	0.58	-0.08
T1300	0.00	0.00	0.16	2.93	0.20	3.29	2.00	-1.29
Total	1.43	0.47	0.16	2.93	0.54	4.10	2.72	-1.38

2019 ADD (MGD) = 1.63
2019 MDD (MGD) = 2.93
2019 PHD (MGD) = 4.31

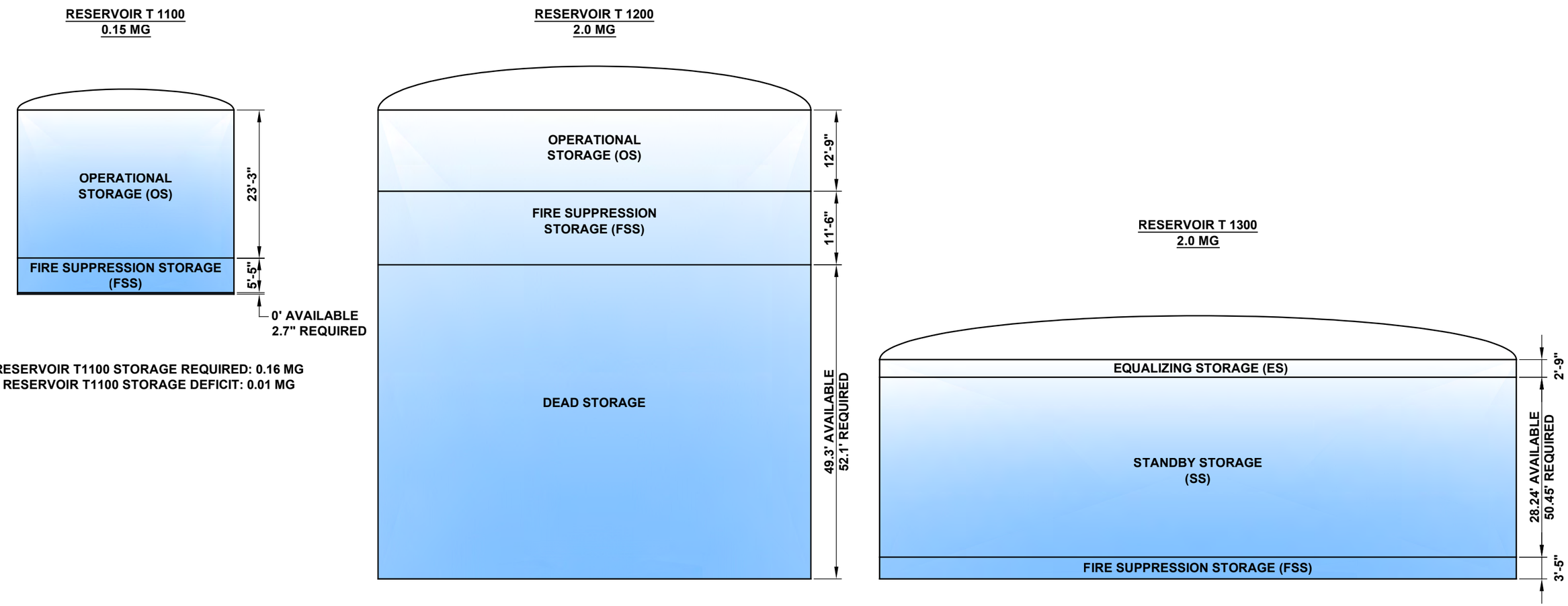

Path: S:\Cad\Lake Meridian WD\15-10043 Water Sys Plan\ Filename: F15-10043_F-4.9 Plot date: Mar 27, 2023-03:59:58pm CAD User: RNicolas.
Xref Filename: |

bhc CONSULTANTS

Lake Meridian WATER DISTRICT

2019 Storage Analysis Tank Schematics

2023 Water System Plan Update
Lake Meridian Water District
April 2023

Figure
4-9

COPYRIGHT © 2023 BHC CONSULTANTS, LLC. ALL RIGHTS RESERVED

THIS PAGE INTENTIONALLY BLANK.

2030 and 2040 Storage Analysis

For the 2030 and 2040 analysis, Tank T1400 and four new pressure zones were added, as shown in Figure 4-10. It was assumed that Tanks T1300 and T1400 will split all equalizing and standby storage proportionally to their volume for the entire system. Tank T1100 was removed from the analysis as the District plans to demolish the Tank.

Dead Storage

For the 2030 and 2040 scenarios, the maximum elevation within the system falls within a new pressure zone served by a booster pump. The next highest service location that falls within a pressure zone served by gravity is about 15 feet lower at 510 feet above MSL. The same process as that used for the 2019 analysis is used to calculate dead storage, determining new values for T1200 and T1400. T1300 still has no dead storage.

Operational Storage

The operational storage for Tanks T1200 and T1300 remains unchanged from 2019, and a value of 0.09 MG was determined for Tank T1400.

Equalizing Storage

The 2030 and 2040 equalizing storage analysis features the same well sources and excluding supply from Covington used for 2019. The methodology remains consistent with the 2019 analysis.

Standby Storage

The 2030 and 2040 storage analyses allow for a reduction in Standby Storage (SB) given the condition that two or more sources will have permanent on-site auxiliary power that starts automatically when the primary power feed is disrupted, and with the largest of these sources out of service, the remaining sources plus SB volume can maintain at least 20 psi through the distribution system under PHD conditions. Well 5 currently has an on-site generator, and the new Well 6 will have an on-site generator upon completion. The Covington intertie also has an on-site generator.

Using the lowest value of 0.75 MGD or 521 gpm for the Covington intertie, the District's largest source is Well 9 at 800 gpm. Thus Well 9 is assumed to be offline, and the Standby Storage is taken to be the MDD for each year, less the daily supply from Wells 5 and 6 and the Covington intertie. The wells were assumed to pump at 22 hours per day, allowing for a two-hour backwash cycle for the filtration plants. The wells would thus be functioning at approximately 91.7% of their full capacity. For Wells 5 and 6 this works out to be 252 and 596 gpm, respectively. For each scenario the Standby Storage turns out to be greater than or equal to the DOH-recommended minimum storage equivalent to 200 gpd/ERU.

Standby storage was divided between T1300 and T1400 proportionally to each tank's volume.

Fire Flow Storage

The fire flow analysis for the system remains consistent with the 2019 analysis; the largest fire flow remains as 3,000 gpm for three hours. It is assumed that Tank T1400 will need to provide 3,000 gpm of fire flow storage on its own to supply the two schools in Zone 5. T1400 will be able to provide adequate fire flow for the entire system through PRVs, therefore fire flow storage is only allocated to T1400 in the future scenarios.

2030 Storage Analysis Results

The results of the 2030 storage analysis are presented in Table 4-6. The 2030 storage analysis indicates no storage deficiencies.

Table 4-6
2030 Storage Analysis

Tank	Dead Storage (MG)	Operational Storage (MG)	Equalizing Storage (MG)	Standby Storage (MG)	Fire Flow Storage (MG)	Total Required (MG)	Total Effective Capacity (MG)	Surplus (MG)
T1200	0.97	0.35	0.00	0.00	0.00	0.35	1.03	0.68
T1300	0.00	0.00	0.08	0.76	0.00	0.84	2.00	1.16
T1400	1.02	0.09	0.11	1.15	0.54	1.89	1.98	0.09
Total	0.97	0.44	0.19	1.91	0.54	3.08	5.00	1.84

2030 ADD (MGD) = 1.74
2030 MDD (MGD) = 3.13
2030 PHD (MGD) = 4.60

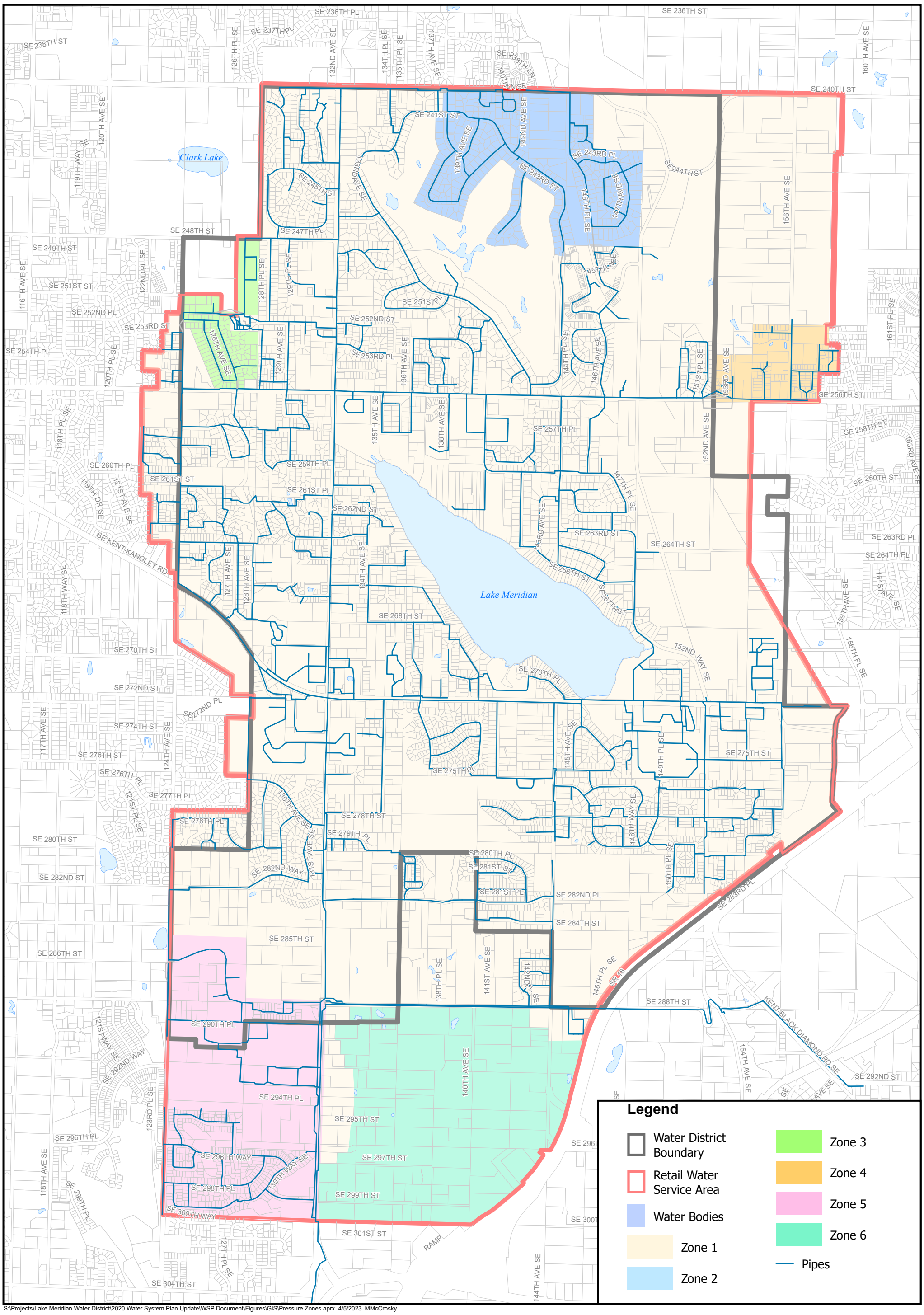

S:\Projects\Lake Meridian Water District\2020 Water System Plan Update\WSP Document\Figures\GIS\Pressure Zones.aprx 4/5/2023 MMcCrosky

King County GIS base data.
Data sources supplied may not reflect current or actual conditions. This map is a geographic representation based on available information. It does not represent survey data. No warranty is made concerning the accuracy, currency, or completeness of data depicted on this map.
BHC Consultants LLC., assumes no responsibility for the validity of any information presented herein, nor any responsibility for the use or misuse of the data.

0 750 1,500 Feet

N

Proposed Pressure Zones
2023 Water System Plan Update
Lake Meridian Water District
April 2023

Figure
4-10

COPYRIGHT © 2022 BHC CONSULTANTS LLC. ALL RIGHTS RESERVED

THIS PAGE INTENTIONALLY BLANK.

2040 Storage Analysis Results

The results of the 2040 storage analysis are presented in Table 4-7. The 2040 storage analysis indicates no anticipated storage deficiencies.

Table 4-7
2040 Storage Analysis

Tank	Dead Storage (MG)	Operational Storage (MG)	Equalizing Storage (MG)	Standby Storage (MG)	Fire Flow Storage (MG)	Total Required (MG)	Total Effective Capacity (MG)	Surplus (MG)
T1200	0.97	0.35	0.00	0.00	0.00	0.35	1.03	0.68
T1300	0.00	0.00	0.08	0.81	0.00	0.90	2.00	1.10
T1400	1.02	0.09	0.13	1.22	0.54	1.97	1.98	0.00
Total	0.97	0.44	0.21	2.03	0.54	3.22	5.00	1.78

2040 ADD (MGD) = 1.81
2040 MDD (MGD) = 3.25
2040 PHD (MGD) = 4.78

The 2040 analysis was also completed accounting for water use efficiency (WUE) measured discussed in Chapter 5. These results are presented in Table 4-8. Water use efficiency creates a surplus of storage in T1400 and increases the surplus in T1200.

Table 4-8
2040 Storage Analysis with WUE

Tank	Dead Storage (MG)	Operational Storage (MG)	Equalizing Storage (MG)	Standby Storage (MG)	Fire Flow Storage (MG)	Total Required (MG)	Total Effective Capacity (MG)	Surplus (MG)
T1200	0.97	0.35	0.00	0.00	0.00	0.35	1.03	0.68
T1300	0.00	0.00	0.07	0.68	0.00	0.76	2.00	1.24
T1400	1.02	0.09	0.11	1.03	0.54	1.77	1.98	0.21
Total	0.97	0.44	0.19	1.71	0.54	2.87	5.00	2.13

2040 ADD with WUE (MGD) = 1.72
2040 MDD with WUE (MGD) = 3.10
2040 PHD with WUE (MGD) = 4.56

THIS PAGE INTENTIONALLY BLANK.

Chapter 5 Water Use Efficiency

5.1 History

The Lake Meridian Water District (District), along with other water purveyors and cities in the Puget Sound region, continues to experience population growth that will eventually demand more water than will be available from current regional supply sources.

In 1985, South King County, in which the District is located, was declared a Critical Water Supply Service Area (CWSSA). The South King County Regional Water Association (SKCRWA) was formed in 1989, to develop a Coordinated Water System Plan (CWSP) to ensure that member agencies would have sufficient water supply to meet the needs of the fast-growing area between Seattle and Tacoma. The CWSP included a water conservation element outlining regional and local conservation objectives, including a target reduction of 6.5% by the year 2000 for purveyors of utilities serving 500 or more customers, such as the District. No target reductions were established by the SKCRWA beyond 2000.

The District began its conservation program in 1997 and has produced quantifiable water savings through operations and maintenance, plumbing retrofit programs, water rates, metering approaches, and information programs to educate customers about conservation. In 1997, the District developed a conservation program with the goal of 0.5% per year reduction to the year 2000, and 1% per year thereafter. The resulting projected water use at 20 years (2017) was 212 gallons per day (gpd)/equivalent residential unit (ERU).

The District has maintained its existing program and added elements it deemed necessary and appropriate to meet its commitment to conserving water with excellent results. From 1997 to 2000, the District reduced demand from 255 gpd/ERU to 240 gpd/ERU, a total reduction of 5.9%. While the CWSP target reduction was 6.5% over 11 years (1989 – 2000), the District nearly exceeded it in just three years (1997 – 2000). From 1997 to 2004, the District reduced demand from 255 gpd/ERU to 205 gpd/ERU, a reduction of over 3% per year. From 2004 to 2014 a further reduction of around 28 gpd/ERU, from 205 gpd/ERU to 177 gpd/ERU was achieved. This represented an average reduction of approximately 1.45% per year. These reductions clearly exceed the District's phased targets of 0.5% and 1%.

Having already met and exceeded their conservation goals, the District set a new goal in 2017 to maintain a 3-year average water use at or below 180 gallons per ERU. This goal was met between 2017 and 2019 as water demand never exceeded 180 gallons per ERU. A graphical comparison of the 1997 projection and the historical water savings is shown in Figure 5-1.

In addition to the development of the CWSP, SKCRWA's initial efforts focused on evaluating water supply opportunities that would provide the reliability and water quality needed to meet future needs. Early on, interties with the larger systems operated by Seattle and Tacoma looked attractive. The potential to further develop the Green River for additional municipal water supply became the early focus of the SKCRWA. Acting on behalf of several of its members, the SKCRWA entered into a contract to participate in the development of the Second Supply Project of Tacoma. Later the SKCRWA supported members developing a Joint Operating Agreement (JOA) for cooperative water supply development. The JOA has been used by members as a basis to craft specific water supply agreements. SKCRWA also provided coordination and leadership to develop the South King County Groundwater Management Plan, and more recently, the

SKCRWA has focused on representing members at regional and state water forums and with state agencies.

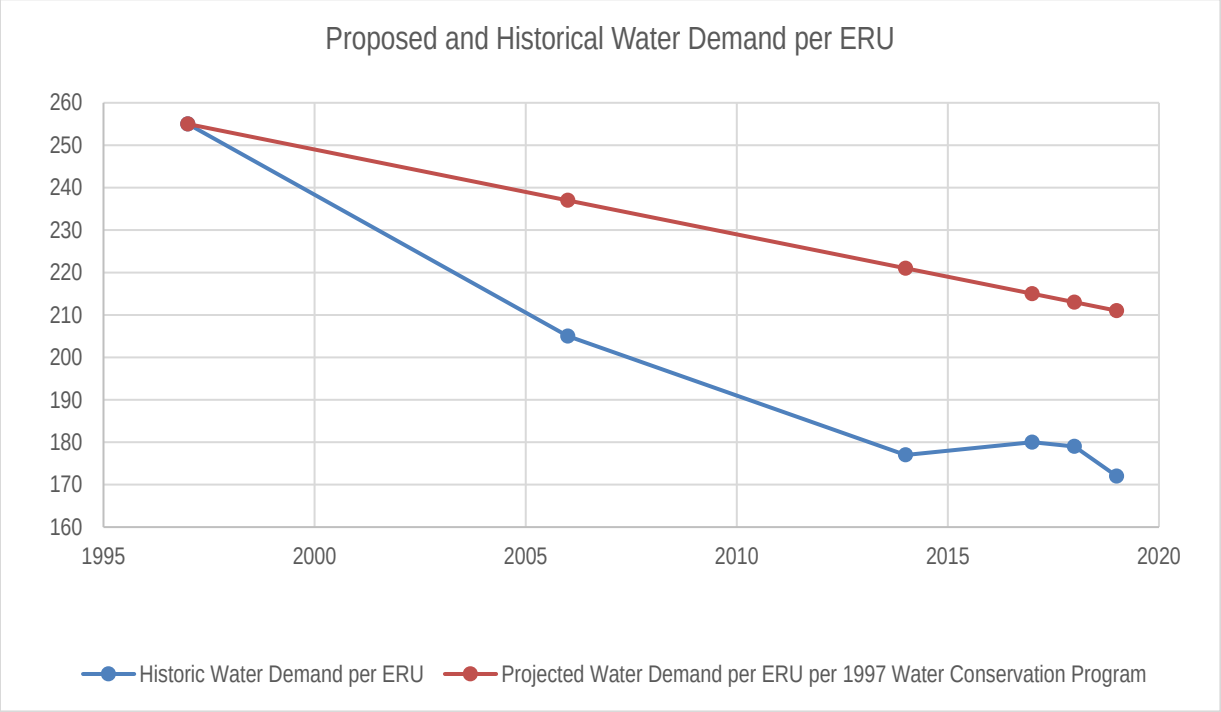

Figure 5-1 Proposed and Historical Water Demand per ERU

5.2 Regulatory Requirements

The Washington Water Utilities Council, Washington State Department of Health (DOH), and Department of Ecology (Ecology) jointly developed Conservation Planning Requirements (CPR) Guidelines and Requirements for Public Water Systems Regarding Water Use Reporting, Demand Forecasting Methodologies, and Conservation Programs. Interim guidelines were first established in 1990, and subsequently finalized and approved in 1994. The DOH published the CPR in 1994.

The CPR includes guidelines for public water systems in preparing and implementing conservation plans and programs to monitor water use. The CPR suggests that a water agency's conservation plan include the following three components:

1. Water use data collection
2. Demand forecasting
3. Conservation program development

DOH approval of an agency's conservation plan is based upon review of all three components of the conservation plan. The only substantial difference between the CPR and the CWSP is the quantitative target.

Additionally, Chapter 5 of the Municipal Water Supply – Efficiency Requirements Act, amended and clarified sections of the State Board of Health Code, RCW 43.20; the laws governing Public Water Systems RCW 70.119A; and sections of the State Water Code, RCW 90.03 were amended in 2003 and revised in 2012. In 2004, DOH published *Municipal Water Law: Interim Planning Guidance for Water System Plan/Small Water System Management Program Approvals* that includes conservation requirements for systems with 1,000 or more connections to facilitate compliance with these regulatory requirements.

5.3 Historical Water Conservation Program

As noted earlier, the District first developed a Water Conservation Program in 1997 as part of its Water Comprehensive Plan. In accordance with the WAC 246-290-810(4)(d)(i), which requires a minimum of 6 measures for a system with connections between 2,500 and 9,999, there were 11 measures within 4 categories that the District implemented. In some categories, the District implemented other program elements which were not required. The District has complied with the CPR for its historical program and is shown in the CPR format in Table 5-1. The historical measures are identified as *conservation*, while the proposed program will be identified as *water use efficiency (WUE)*.

Table 5-1
Summary of Historical Water Use Efficiency Program

Historical Water Use Efficiency Program	Required By CPR
PUBLIC EDUCATION	
Program Promotion	√
The District, as required, provides an annual Consumer Confidence Report (CCR) which outlines the water source, contaminant levels, violation of contaminates, etc. Conservation information is generally included as part of the CCR.	
The District, as required, completes a Lead and Copper Report that provides a summary of levels in the water. Conservation information is generally included in this Report as well.	
The District makes available literature on water conservation practices, efficiency standards for plumbing fixtures, and water conserving landscaping.	
The District participates in the Puget Sound Water Conservation Coalition, which provides local newspapers with information for news articles or feature pieces on water supply and conservation, as necessary.	
TECHNICAL ASSISTANCE	
Purveyor Assistance	√
Not applicable.	
Customer Service	√
The District routinely monitors water usage for all residential and commercial accounts. If a significant deviation from past usage is noticed, the customer is notified immediately.	
The District provides assistance to prospective new customers regarding water conservation practices by having brochures and materials available at its office.	
The District offers assessments and audits of local school facilities.	

Table 5-1
Summary of Historical Water Use Efficiency Program (Cont.)

Historical Water Use Efficiency Program	Required By CPR
Bill Showing Consumption History	√
Customers' water bills include water use over the same period from the prior year as well as the classification average water use.	
SYSTEM MEASURES	
Source Meters	√
The District is metered at all source connections. These meters assist in system management and water accounting. Meters are maintained and tested on a regular basis.	
Service Meters	√
The District requires all water to be metered at the point of use.	
The District has a water meter replacement program, which allows the District to replace meters on a 20-year cycle.	
The District requires any person who desires to use District water from an unmetered source to rent a meter and pay the District for water used.	
Unaccounted Water/Leak Detection	√
The District requires developers and contractors to use a hydrant meter during the construction of projects.	
When anomalies appear on customer's water bills the District investigates for the source of the problem.	
The District cleans and scours all watermains on a five-year cycle as part of a flushing program. The water is accounted for by the use of a flow meter.	
INCENTIVES/OTHER MEASURES	
Single-Family/Multifamily Kits	√
The District encourages and periodically provides water conservation items to single-family homes and the owners and managers of multifamily buildings. Conservation items available free of charge include toilet leak detection tablets.	
The District supports new codes required by local jurisdictions for all new construction to install low-flow devices before connection to the system.	
Nurseries/Agriculture	√
The District provides informational pieces on watering practices and the use of native vegetation.	
Landscape Management/Playfields	√
The District supports, encourages, and provides resources on the use of native vegetation, drought tolerant and low water use landscaping.	
The District has rain gauges available for its customers to track rainfall. The gauges can also be used to track how much water was applied to lawns and landscape.	

Table 5-1
Summary of Historical Water Use Efficiency Program (Cont.)

Historical Water Use Efficiency Program	Required By CPR
Conservation Pricing	√
The District maintains a conservation-oriented pricing structure with increasing block rates to provide an economic conservation incentive to its customers.	
Utility Financed Retrofit	
The District provides a washer rebate for $50 for approved machines.	
The District contributed $300 to the Kent School District for retrofitting water fixtures in June 2005 at the Martin Sortun Elementary School	

5.3.1 Historical Water Savings

The 1997 Comprehensive Plan established a water demand per ERU value of 300 gallons per account. Less the unaccounted-for water, the water demand per ERU value is calculated to be 255 gallons per account in 1997. Taking the District's 1997 phased conservation goals of 0.5% to the year 2000 and 1% thereafter, the proposed goal for 2019 was 211 gallons per ERU. The actual 2019 ERU was 172 gallons per ERU which is approximately 22% less than the 1997 goal. Savings realized as a result of the District's 1997 Water Conservation Program are illustrated in Figure 5-1.

The District's distribution system leakage (DSL) has remained below the District's policy of a DSL of 10% or less. The average percent of DSL for the past three years has been 6.0%, however this average includes an outlier of 2% DSL in 2018. Taking the average of only 2017 and 2019 returns a value of 8.2%. The District desires to use conservative water demand projections and therefore will continue to use 10% DSL as a planning value. Additional information can be found in Table 2-5 of Chapter 2.

The actual water usage by customer class from 1999 to 2019 usage is shown below in Table 5-2. The data reflects end-of-year values. It can be noted from this table that the average daily usage decreased significantly in single-family residential and multifamily residential with the most significant reduction in the single-family customer class, decreasing 25.8% since 1999. The fire protection class was not evaluated, as this annual volume is dependent on emergency use. The commercial/other class usage has decreased 9.4% since 1999. Table 2-7 of Chapter 2 displays actual water usage by customer class for each year from 2017 to 2019.

Table 5-2
Actual Average Day Demand by Customer Class

Customer Class	Water Usage	1999	2019	% Conservation
Single-Family Residential	Gal per Account	230	171	25.8%
Multifamily Residential	Gal per Account	2,097	1,883	10.2%
Fire Protection	Gal per Account	15	2	N/A
Commercial/Other	Gal per Account	979	887	9.4%
Distribution System Leakage	% Total Consumption	1.0%	7.8%	-6.8%

5.3.2 Seasonal Water Usage

Water usage can vary significantly depending on the season. Figure 5-2 shows the billed usage of each customer class. The District bills on a two-month cycle so the figure shows the average for two months. The graph shows that during the summer months Single-Family Residential accounts and Irrigation accounts use significantly more water while Multifamily Residential and Commercial accounts are fairly steady throughout the year. These patterns can be attributed to the watering of lawns and irrigation of crops during the dryer summer months. Multifamily Residential and Commercial buildings generally do not require a large amount of irrigation and thus show a steady use of water throughout the year.

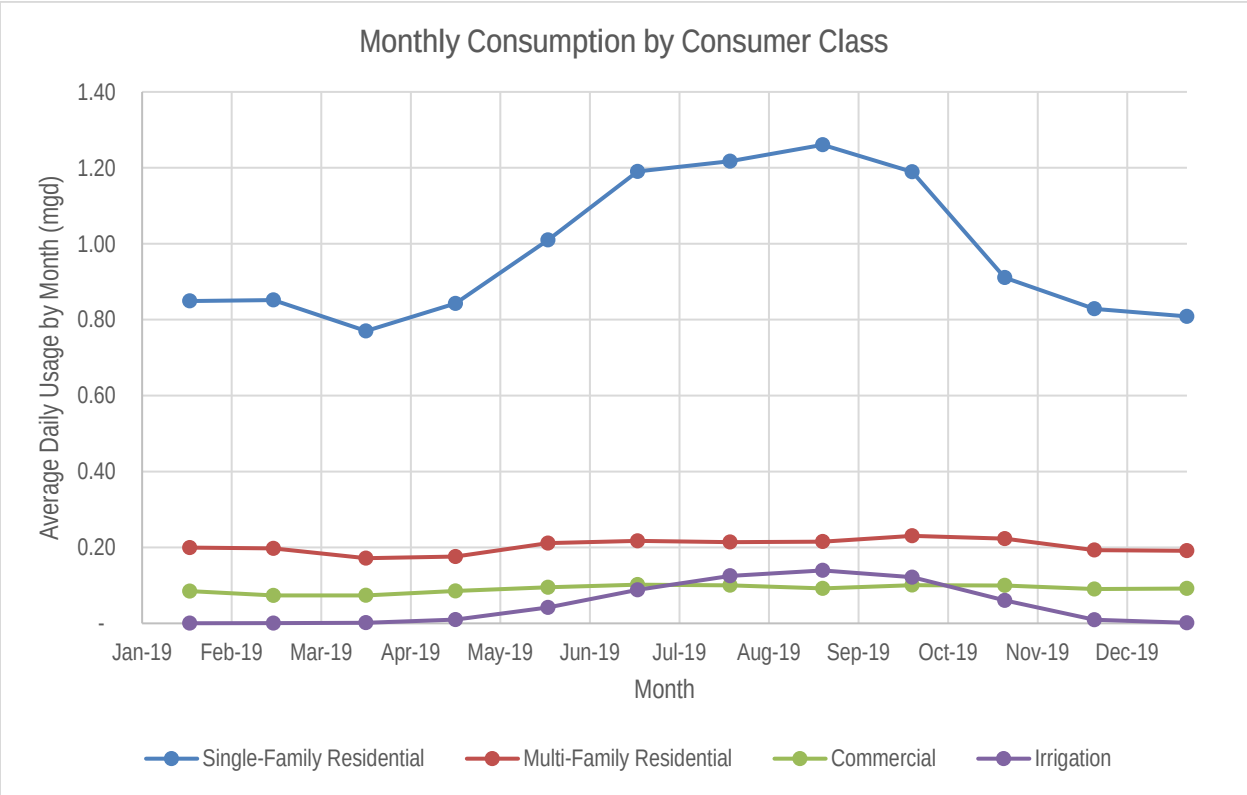

Figure 5-2 Monthly Consumption by Consumer Class

5.3.3 Evaluation of Water Use Efficiency Measures

As part of a water system plan, the District is required to evaluate water use efficiency measures. The evaluation focuses on customer demand efficiencies. Measures must be evaluated for cost-effectiveness from the following categories according to WAC 246-290-810(4)(d):

- Indoor residential
- Outdoor
- Industrial/commercial/institutional

For water systems with 1,000 or more connections there are three evaluation criteria when determining if a WUE measure is cost effective. They include:

- Water System's Perspective: Determine if the measures are cost-effective. This can be represented by whether the revenue meets the expenditure demands.

- Cost-Sharing Perspective: Evaluate cost-effectiveness if the costs were shared with other entities, such as neighboring water systems and water conservation partners.
- Societal Perspective: Evaluate if it would be cost-effective if all costs and benefits were included, including environmental, recreational, or aesthetic benefits.

5.4 2023-2029 Water Use Efficiency Program

The District's 2023-2029 Water Use Efficiency Program will remain the same but will be organized differently according to the implementation evaluation categories which include indoor residential, outdoor, and industrial/commercial/institutional. This program will assist in achieving the District's water conservation goal. No existing program measures have been recommended to be discontinued.

On a yearly average, indoor residential water usage accounts for the majority of water usage (69%) in the District in 2019. Figure 5-3 shows a breakdown of water usage for each of the WUE evaluation categories. The following sections provide a breakdown of programs that target each category.

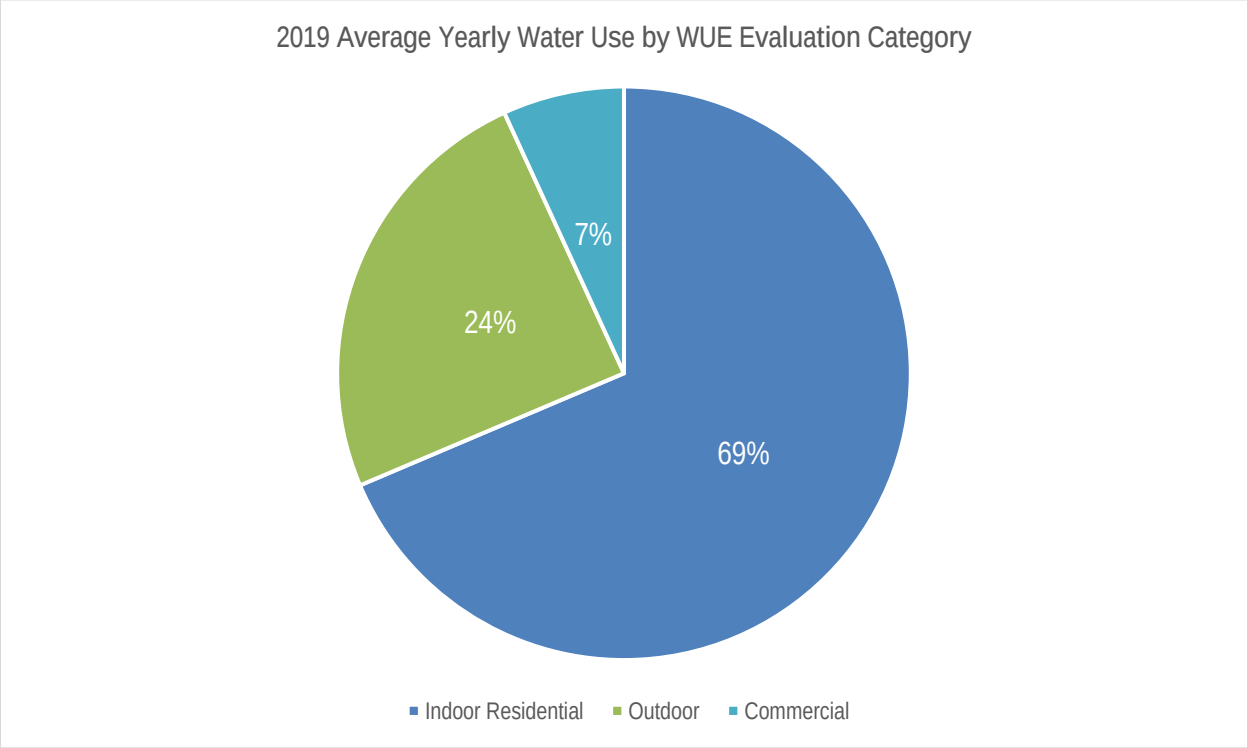

Figure 5-3 2019 Average Yearly Water Use by WUE Evaluation Category

The water use efficiency goal for the District is to maintain their current water use efficiency. Yearly fluctuations in water use are anticipated but the District's goal is to keep the 3-year water use average to around 180 gallons per day per ERU.

According to the WUE program requirements, there are measures that must be implemented. Because these measures are mandatory, they do not count towards the minimum measures required to implement in the WUE program. They include:

- Install production (source) meters

- Install consumption (service) meters
- Perform meter calibration
- Implement a water loss control action plan to control leakage
- Educate customers about water use efficiency practices

As discussed above, DOH requires a water system to implement a certain number of measures based on size. For Lake Meridian Water District, the required number is six. If a specific WUE measure is being implemented for different customer classes, it counts as multiple WUE measures. Excluding the required measures that are listed above, the proposed program contains 10 measures, 4 more measures than required. Measures required are not listed in the following program but noted above.

5.4.1 Indoor Residential

Customer Assistance

The District will provide the bills showing consumption history. The bill will include water use over the same period from the prior year as well as the classification average water use.

Conservation Pricing

The District will maintain a conservation-oriented pricing structure with increasing block rates to provide an economic conservation incentive to its customers.

Incentives

The District will provide a washer rebate of $50 for approved machines.

The District will encourage and periodically provide water conservation items to single-family homes and the owners and managers of multifamily buildings. These items will be available free of charge.

The District will support any new code required by the local jurisdiction for all new construction to install low-flow devices before connection to the system.

Program Promotion

The District will participate in media and advertising opportunities. They will participate in the Puget Sound Water Conservation Coalition, which provides local newspapers with information for news articles or feature pieces on water supply and conservation, as necessary. Also, the District will publish a quarterly newsletter, *Water Biz,* which provides customers with information on programs, conservation tips, and additional resources.

5.4.2 Outdoor

Nurseries/Agriculture - Landscaping

The District will support, encourage, and provide resources on the use of native vegetation, drought tolerant and xeriscaping (low water use landscaping) methods.

The District will provide rain gauges periodically to its customers to track rainfall. The gauge can also be used to track how much water was applied to lawns and landscape.

5.4.3 Industrial/Commercial/Institutional

Conservation Pricing

The District will provide the water bill showing consumption history. Although this measure was implemented for the indoor residential category, it will also be used to for this implementation category.

5.4.4 Reclaimed Water Analysis

The District may develop projects or consider participation as appropriate in the water reuse projects and programs developed by adjacent jurisdictions and others, including demonstration or pilot projects that may be developed in accordance with applicable federal, state, and local laws and regulations.

District staff may investigate and recommend proposed changes to the District's development and service policies and regulations that may be desirable to encourage the promotion of these programs and technologies.

In accordance with the District's commitment, it may continue to work with other agencies to identify opportunities and explore ownership and management options to produce and deliver reclaimed water within the District. However, Attachment 9 of the Municipal Water Law has been completed for any potential reclaimed water users and can be found in Appendix P.

5.4.5 Summary of Recommended Water Use Efficiency Savings

The future water demand forecast in Chapter 2 includes demand forecasting for two customer classes: residential and commercial/other. If the District's WUE Program implementation continues to be as successful as in past years, future water demand will be less than that shown in Chapter 2. The water savings shown reflect the conservative planning water use of 200 gallons per ERU compared to the WUE goal of maintaining a 3-year average water use of 180 gallons per ERU. Table 5-3 and Table 5-4 provide a summary of the Water Demand Forecast. The water use efficiency demand projections are based on the non-conservation demand forecast and implementation of the described water use efficiency program.

Table 5-3
Summary of Water Demand Forecast (MGD)

Classification	2020	2021	2022	2023	2024	2025	2040
ADD w/o WUE	1.63	1.64	1.66	1.67	1.68	1.70	1.81
ADD w/ WUE	1.55	1.57	1.58	1.59	1.60	1.62	1.72
Savings	*0.08*	*0.08*	*0.08*	*0.08*	*0.08*	*0.08*	*0.08*
MDD w/o WUE	2.93	2.96	2.98	3.00	3.03	3.05	3.25
MDD w/ WUE	2.80	2.82	2.84	2.86	2.89	2.91	3.10
Savings	0.14	0.14	0.14	0.14	0.14	0.14	0.15
% Savings	4.7%	4.7%	4.7%	4.7%	4.7%	4.7%	4.7%

Table 5-4
Total Demand (MG)

Year	Without WUE	With WUE	Total Savings (MG)
2019	594.80	566.97	27.83
2026	622.30	593.04	29.26
2030	634.84	604.98	29.86
2040	659.64	628.80	30.84

The District's WUE Program is a critical element of its efforts to achieve water savings. It is important for the District to continue the existing program and implement enhanced and/or new measures as discussed herein. As previously mentioned, the substantial water demand per ERU savings of 15% higher than the 1997 projections are a direct result of the targeted measures in the District's Water Conservation Program.

Chapter 6 Water Rights, Supply Analysis and Source Water Protection

The Lake Meridian Water District's (District) groundwater sources cannot meet the projected water demands and as a result, the District has secured alternative water supplies from adjacent water purveyors. The District currently receives water from District wells and from the City of Auburn on an as needed basis, under the provisions of Interlocal Agreements.

Starting January 1, 2017, the District continually receives Regional Water System Supply (RWSS) water through Covington Water District. This agreement is separate from the December 2002 agreement with Tacoma Water to purchase RWSS water as needed. The District retains its right to purchase water from the City of Auburn if needed but they will no longer be a main supplier of water. Additionally, at the end of 2015 the District entered into an agreement with Covington for Emergency Water Supplies.

6.1 Groundwater Supply Sources

The District relies heavily upon its groundwater wells which meet approximately 40% of its current supply needs. The District currently has four active wells (Wells 3, 5A, 6, and 9). Wells 6 and 9 supplement the supply during the winter, with Wells 3 and 5A providing additional seasonal supply. Three District wells (Wells 1, 2, and 4) have been placed in emergency standby status per the 1996 Stipulation and Agreed Order of Dismissal between Water District #111 and the Washington State Department of Ecology (Ecology). Wells 7 and 8 are monitoring wells and are not used for consumption.

The District wells are equipped with flow control valves, which modulate to maintain pumping levels in each well above a minimum water level. Each well is also equipped with a water level transducer which automatically records the water level at regular intervals. The flow control valve is fully open at pump start-up in each well. The flow control valve closes as the pumping water level approaches the minimum level, slightly reducing the well pump's output and ensuring that drawdown in the well does not drop below the minimum level. The well pump operation is regulated by the reservoir level and customer demand patterns.

The District's wells are generally in excellent condition. Each well house is a Concrete Masonry Unit (CMU) building with a wood truss and composite roof. Each well is visited daily by District staff, and the mechanical and electrical equipment is maintained regularly. Aquifer levels and daily production records are collected and forwarded to the District's hydrogeologist, and subsequently reviewed for any indications of reduced well efficiency.

If there is an indication of reduced well efficiency, the District will proceed with additional field diagnostics. Well rehabilitation will be considered in the event of unacceptable losses of well efficiency. Well replacement will be considered if well rehabilitation is not appropriate or is not successful in improving the well's efficiency.

There are currently no indications that any of the District's wells are at risk of an unacceptable loss of well efficiency.

6.2 Existing Supply Facilities

6.2.1 Well 1

Well 1 is located in the vicinity of the intersection of SE 256th Street and 148th Avenue SE. The District has a water right certificate (#G1-23817C) for Well 1, which allows a maximum instantaneous withdrawal of 300 gpm and a maximum annual volume of 384 acre-feet. However, per the 1996 Stipulation and Agreed Order of Dismissal, Well 1 has been placed in emergency stand-by status and is not a regular District supply source. This well was drilled in 1981 to a depth of 256 feet with a 12-inch casing. Water at this source was historically treated with sodium-hypochlorite for disinfection, sodium fluoride and polyphosphate (for control of iron and manganese).

6.2.2 Well 2

Well 2 is located in the vicinity of the intersection of SE 252nd Street and 146th Avenue SE. The District has a water right certificate (#G1-23817C) for Well 2, which allows a maximum instantaneous withdrawal of 300 gpm and a maximum annual volume of 384 acre-feet. Similar to Well 1, Well 2 has been placed in emergency standby status per the 1996 Stipulation and Agreed Order of Dismissal and is not a regular District supply source. This well was drilled in 1982 to a depth of 68 feet with a 12-inch casing.

6.2.3 Well 3

Well 3 is located to the northeast of the intersection of 146th Avenue SE and 148th Avenue SE. The site is located in the Northwest quarter of the Southwest quarter of Section 23, Township 22 North, Range 5 East. The property is owned by King County. The approximate address of the site is 24820 148th Avenue SE, in the City of Covington.

The District has a water right certificate (#G1-24302C) for Well 3, which allows a maximum instantaneous withdrawal of 400 gpm and a maximum annual volume of 448 acre-feet. This withdrawal limit translates to an average of approximately 16.7 hours a day at the maximum withdrawal of 400 gpm, or a continuous rate (24 hours per day) of 278 gpm.

This well was drilled in 1982 to a depth of 85 feet with a 12-inch casing. Water at this source is filtered for control of iron and manganese and treated with sodium hypochlorite and fluoride.

Recent updates include:

- Removal of the old two cell configuration and replaced with new 24PPD cell panel
- Installed new plumbing around the new cell panel
- Replaced check valve with Kynar Valve
- Replaced the tank blower
- Permanently mounted a raw water flow meter
- Various cleaning and maintenance activities

6.2.4 Well 4

Well 4 is located in the vicinity of the intersection of 146th Avenue SE and 145th Place SE. The District has a water right certificate (#G1-24301C) for Well 4, which allows a maximum instantaneous withdrawal of 300 gpm and a maximum annual volume of 336 acre-feet. In accordance with the 1996 Stipulation and Agreed Order of Dismissal, Well 4, like Wells 1 and 2, has been placed in emergency standby status and is not a regular District supply source.

This well was drilled in 1982 to a depth of 170 feet with a 12-inch casing. Water at this source was historically treated with gaseous chlorine for disinfection, sodium fluoride, and polyphosphate (for control of iron and manganese).

6.2.5 Well 5A

Well 5A is located west of the intersection of SE 252nd Street and 128th Place SE, on the District's reservoir site roughly 45 feet from the original Well 5. The site is located in the Southwest quarter of the Southeast quarter of Section 21, Township 22 North, Range 5 East. The property is owned by the District. The approximate address is 25303 128th Avenue SE, in the City of Kent.

The water right certificate (#G1-24299C) for Well 5A allows a maximum instantaneous withdrawal of 275 gpm and a maximum annual volume of 308 acre-feet/year. This facility could pump at 170 gpm 24 hours per day and not exceed the maximum annual withdrawal limit. At this time, the District is not proposing any modifications to the pump at Well 5A due to the water right limits identified in the 1996 Stipulation and Agreed Order of Dismissal.

The original Well 5 was drilled in 1982 to a depth of 373 feet. The replacement well, Well 5A, was drilled in 1991 to a depth of 1,210 feet with a 12-inch casing and completed in the same zone as Well 5. Water at this source is filtered for iron and manganese control and treated with sodium hypochlorite and fluoride.

Recent updates include:

- Removal of the old two cell configuration and replaced with new 24PPD cell panel
- Installed new plumbing around the new cell panel
- Replaced check valve with Kynar Valve
- Replaced the tank blower
- Permanently mounted a raw water flow meter
- Replaced the brine pump
- Removed existing rectifier and replaced it with a new rectifier
- Re-mounted the tank blower
- Various cleaning and maintenance activities

6.2.6 Well 6/6B

Well 6 is located on the northwest corner of the intersection of SE 282nd Way and 132nd Avenue SE. The site is located in the Southeast quarter of the Northeast quarter of Section 33, Township 22 North, Range 5 East. The site is Tract "C" of Sun Meadows Division 2, according to the plat of Sun Meadows recorded in

Volume 130 of Plats, pages 61 and 62, records of King County, Washington. The approximate address is 28111 132nd Avenue SE, in the City of Kent.

The water right certificate for Well 6 (#G1-24568C) allows a maximum instantaneous withdrawal of 650 gpm and a maximum annual volume of 728 acre-feet/year. This translates to an average of approximately 16.7 hours a day of pumping at 650 gpm, or a continuous rate (24 hours per day) of 451 gpm.

This well was drilled in 1984 to a depth of 397 feet with12-inch diameter casing. Water from this source is filtered for iron and manganese control and treated with sodium hypochlorite and fluoride.

Well 6 is provided with a receptacle for a portable generator.

Recent updates include:

- Removal of the old two cell configuration and replaced with new 24PPD cell panel
- Installed new plumbing around the new cell panel
- Replaced check valve with Kynar Valve
- Rebuilt the brine pump
- Permanently mounted a raw water flow meter
- Re-mounted the tank blower
- Various cleaning and maintenance activities

In early 2018 the District began experiencing issues with pulling sand from Well 6. A supplemental well was drilled to a depth of 253 feet in August 2021.The well was tested and developed in November 2021 and has an anticipated capacity of 650 gpm. As of the writing of this plan, the District is in the process of design for equipping Well 6B. Well 6B will discharge to the existing treatment equipment on site.

6.2.7 Well 7

Well 7 is a monitoring well located approximately 800 feet east of the flow control station on SE 288th Street. It is adjacent to Well 8. There are no existing water rights for this well. Application G1-25263 for primary water rights at this location was denied in 1995; however, the source could possibly be permitted as an additional point of withdrawal in the future.

6.2.8 Well 8

Well 8 is a monitoring well located approximately 800 feet east of the flow control station on SE 288th Street. It is adjacent to Well 7. There are no existing water rights for this well.

6.2.9 Well 9

Well 9 is located at approximately SE 275th Street and 152nd Avenue SE on Tract B of the plat of Glenbrook in the Northwest quarter of the Northwest quarter of Section 35, Township 22 North, Range 5 East. The property is owned by a local homeowner's association. The approximate address of the Well 9 site is 14823 SE 272nd Street, in the City of Kent.

The water right permit (#G1-25374P) for Well 9 allows a maximum instantaneous withdrawal of 800 gpm and a maximum annual volume of 960 acre-feet/year. This is equivalent to an average of approximately 17.9 hours a day at 800 gpm, or continuous production (24 hours per day) at 595 gpm. Per the 1996 Stipulation and Agreed Order of Dismissal, Well 9 serves as an additional point of withdrawal.

This well was drilled in 1988 to a depth of 443 feet with a 12-inch diameter casing. Water from this source is filtered for iron and manganese control and treated with sodium hypochlorite and fluoride.

Well 9 is provided with a receptacle for a portable generator.

Recent updates include:

- Removal of the old two cell configuration and replaced with new 24PPD cell panel
- Installed new plumbing around the new cell panel
- Replaced check valve with Kynar Valve
- Replaced the brine pump
- Removed existing rectifier and replaced it with a new rectifier
- Permanently mounted a raw water flow meter
- Replaced and re-mounted the tank blower
- Various cleaning and maintenance activities

6.3 Water Rights

The District holds Ecology certificated rights to annually withdraw a total of 2,204 acre-feet (1.97 million gallons per day (MGD)) of groundwater with a maximum instantaneous withdrawal of 1,925 gpm (2.77 MGD). These values were confirmed during the 1996 Stipulation and Agreed Order of Dismissal. The certificates of water rights for the wells, Water Rights Self Assessment Form for Water System Plan, Water Source Supply Forecast Model, and 1996 Stipulation and Agreed Order of Dismissal are included in Appendix L.

6.4 Purchased Water Supply

6.4.1 Covington Water District

The District signed a Wholesale Water Supply Agreement in December 2015 with Covington Water District. This water supply replaces the water that was recently being supplied by Auburn. Starting January 1, 2017, the District will be purchasing a minimum of 750,000 gpd up to a maximum of 1,000,000 gpd of water between October 1st through May 31st. Between June 1st and September 30th, the District has agreed to purchase a minimum of 1,000,000 gpd and up to a maximum of 1,200,000 gpd of water. The agreement includes the District's purchase of Covington's flow control station and flow meter on SE 288th Street as well as over 7,000 linear feet (LF) of 16-inch water main, 46 LF of 12-inch water main and 21 LF of 8-inch water pipes.

The Wholesale Water Supply Agreement runs until January 1, 2057, with the option of extending the contract. The water will come from Covington's supply of RWSS water which is fluoridated. The SE 288th Street Intertie between the District and Covington will be used for this supply and will be provided at a hydraulic gradeline of 660 feet.

Additionally, an Emergency Water Supply Agreement was entered into between the District and Covington in September 2015. This agreement is not affected by the Wholesale Supply of Water agreement entered into by the two parties in December 2015. The SE 272nd Street Intertie between the District and Covington will be used for this emergency supply at a hydraulic gradeline of 660 feet.

6.4.2 City of Auburn

The District may also purchase water from the City of Auburn, as defined in Interlocal Agreements #1 and #2. These agreements allow for the wholesale purchase of water from Auburn up to 2.5 MGD. The supply comes from the intertie pump station near the City of Auburn's Lea Hill Reservoir. This pump station is manually controlled and operates at a constant flow rate determined by the District on a daily basis. The intertie, installed in 1996, also has the ability to provide an estimated 1.5 MGD gravity flow from the District to Auburn on an emergency basis. This two-way intertie site is located at 132nd Avenue SE and SE 304th Street. Copies of the Interlocal Agreements are included in Appendix D.

In December 2015, the District notified the City of Auburn that they would be ending their regular purchase of water from them starting January 1, 2017. The District retains the right to purchase the same amount of water from Auburn in the future, if the supply is available.

6.4.3 Regional Water Supply System

The District also purchased firm capacity in the RWSS, formerly known as the Tacoma Second Supply Project (TSSP), to provide for projected growth in demand. Negotiations with Tacoma began in late 2002 for 1.2 MGD supply for average daily use, 1.4 MGD for peak day use, and 1.33 MGD for a consecutive 4-day use. The City of Tacoma proceeded with construction of the RWSS in 2002. Copies of the Agreements are included in Appendix D.

As part of that project, Tacoma constructed a tee on its pipeline and installed a vault for a future flow meter to serve the District. The District constructed the balance of its facilities for the turnout and requested Tacoma complete its meter installation at the same time. The District also installed the water main from the turnout to the southern portion of the District's system. Tacoma's hydraulic gradeline at the intertie site is approximately 894 feet, which correlates to approximately 200 pounds per square inch (psi). The pressure in the District's system will be approximately 75 psi.

The District's portion of the turnout construction is a pressure regulating and flow control station between the meter vault and the District's distribution system. The pressure regulating station includes high and low flow pressure regulating valves, pressure relief bypass valves, pressure and flow monitoring, and telemetry. The District also installed a combination pH and chlorine analyzer to monitor the chemistry of the water entering the District's system. The flow control station also includes a meter for monitoring and control.

6.5 Supply Evaluation

The future water demand summarized in Table 2-10. The total District ADDs and MDDs at the end of the planning horizon (2040) are estimated to be 1.81 MGD and 5.35 MGD, respectively, without conservation. Table 6-1 represents the analysis of the future supply in the year 2035 based on the existing water rights and Intertie Supply Agreements. The table includes comparing the scenarios of all the District's sources and discounting the largest source.

Table 6-1
Supply Analysis

	Source Name/Number	Maximum Instantaneous Flow Rate (Qi)	Maximum Annual Volume (Qa)
	Well 3	400	448
	Well 5A	275	308
	Well 6	650	728
	Well 9	800	960
Maximum Well Supply by Right		1,925 (gpm)*	2,204 acre-ft/yr*
Maximum Well Supply by Right (MGD)		2.77	1.97
Covington Supply (MGD)		1.20	1.10
RWSS (MGD)		1.40	1.20
Auburn Supply (MGD)		2.50	2.50
Total Supply (MGD) – all sources		7.87	6.77
Total Supply (MGD) minus largest source		6.67	5.38
Average Day Demand 2035 (MGD)			2.02
Max Day Demand 2035 (MGD)		5.55	
Excess/Deficiency (MGD) – all sources		2.32	4.75
Excess/Deficiency (MGD) – minus largest source		1.12	3.36

Note:
1) For the supply analysis, the Maximum Well Supply was reduced to 1,925 gpm and 2,204 acre-feet to reflect the total District water rights rather than the actual maximum pumping capacity.

6.6 Water Supply Strategies

The District's water supply strategy includes using their own groundwater resources and purchase of capacity in regional supplies. This strategy continues to remain valid for the District, even as the potential regional projects have changed. Currently, in addition to its own groundwater production, the District purchases water from Covington, the City of Auburn, and the RWSS. The water purchased from the Covington Water District will come from Covington's rights to the RWSS water.

The District currently has sufficient supply to meet the average day demand and maximum day demand to 20 years out (2035) even without conservation. The new agreement with Covington and the retention of the rights to request water from Auburn and directly from the RWSS provide the District a water supply sufficient to meet all water demands, as shown in Table 6-1.

6.7 Water Reuse

The District is not the sewer purveyor for the area. However, the District supports reuse facilities if economically, socially, and environmentally feasible. The District may consider participation as appropriate in the water reuse projects and programs developed by others, including demonstration or pilot projects that may be developed in accordance with applicable federal, state, and local laws and regulations.

Currently, there are no viable candidates for reclaimed water within the District's water service area. Should potential reuse opportunities become available, the District will support them as appropriate. This includes evaluating the District's development and services policies to encourage the promotion of these programs and technologies, as they become available.

6.8 Groundwater Management

6.8.1 Wellhead Protection

Section 1428 of the 1986 Amendments to the Federal Safe Drinking Water Act (SDWA) mandates that each state develop a wellhead protection program and that all federally defined public water systems (in Washington, Group A systems) using groundwater as its source implement a wellhead protection plan. In July 1994, the WAC addressing requirements for Group A public water systems (WAC 246-290) was modified to include mandatory wellhead protection measures. The legislative authority to require Wellhead Protection (WHP) planning can be found in the RCW Chapters 43.20.050, 70.119A.060, and 70.119A.080.

The overall goal of the state WHP program is to prevent the contamination of groundwater used by Group A public water systems. This is accomplished by providing management zones around public wells, identifying existing groundwater contamination sources, and managing potential sources of groundwater contamination prior to their entry into the drinking water system. Under the WAC, local public water systems have the primary responsibility for developing and implementing local Wellhead Protection Plans (WHPPs). However, due to the limited jurisdictional and regulatory authority afforded most purveyors, coordination with other local, State, and Federal agencies is essential to the successful implementation of a WHPP.

Washington State Department of Health (DOH) has developed regulations that require Group A water systems using groundwater sources to develop and implement the WHP (WAC 246-290-135). The objective is to prevent releases of contaminants to groundwater in areas that contribute water to the public supply systems.

The basic elements of a WHP Plan include:

- Assessment of initial groundwater susceptibility for each water supply source
- Delineation of the Wellhead Protection Area (WHPA) that directly contributes groundwater to each water supply well
- Inventory of land uses and identification of potential sources of contamination within each WHPA
- Documentation of notification to owner/operators of known or potential
- Development of spill prevention plans and water contingency plans that minimize or eliminate the possibility of contamination to the groundwater supply and also development of options for maintaining water supply in the event the aquifer contributing to a source is contaminated

The State of Washington WHP applies to the District's wells.

1997 Wellhead Protection Program

To meet Federal and State requirements, the District developed a WHPP to identify and protect the groundwater resources that supply the District's wells. The District's Plan was coordinated with nearby resource-protection efforts then under development by the City of Kent and Covington Water District and focused on the delineation of wellhead protection areas, the identification of existing and potential contamination hazards, and the development of protection strategies.

The initial phase of the 1997 WHPP required an evaluation of the hydrogeology of the District to determine groundwater flow directions and the recharge area that contributes groundwater to the wells. Data collected to evaluate the local and regional hydrogeology included information concerning more than 609 wells, surface topography, climate, geologic history, stratigraphy, and surficial geology. A "zone of contribution" was delineated for each of the District's supply wells. The zone of contribution is the aquifer area that contributes groundwater to the well. To meet DOH requirements, these zones were further subdivided into capture zones reflecting one-year, five-year, and ten-year travel times. Wellhead protection zones for the shallow wells in the North Meridian Aquifer (Wells 1–4) were calculated with an analytic element flow model; capture zones for the remaining, deeper wells were defined with hydrogeologic analysis and analytical modeling.

Once zones of contribution were delineated for each well, sources of known and potential contamination were identified from contaminant site databases maintained by the EPA and Ecology. An extensive, parcel-by-parcel field investigation was performed with the District's assistance to verify site locations from the databases and evaluate land use in the area. Several point-sources of contamination, such as leaking underground storage tanks, were documented although no contamination of the District wells was identified. The hazard inventory noted various land uses that could pose a contamination threat, including residential development (medium density and rural), transportation corridors, and industrial and commercial developments.

The 1997 WHPP identified numerous protection strategies, including public education, communication with local and state agencies, ongoing monitoring, and greater involvement in land-use planning and zoning decisions. The 1997 WHPP also incorporated a spill response plan, to formalize notification and "first response" protocols, and a contingency plan, to deal with the possible loss of one or more water sources due to a contamination event. The 1997 Well Head Protection Plan is available at the District's office.

2005 Hazard Inventory Update

Once developed, a WHPP must be updated on a regular basis to reflect substantial changes in production, changes in land use and new point sources of contamination. As part of a water rights agreement (the 1996 Stipulated and Agreed Order of Dismissal), the District placed Wells 1, 2, and 4 in permanent standby status. Depending upon the status of interties with adjacent purveyors, these wells could conceivably still be used in an emergency situation, so the historic wellhead protection areas have been maintained. No substantial changes in production are proposed for the District's other wells, and their wellhead protection areas remain unchanged.

The most recent hazard inventory was accomplished in concert with the District's previous Water Comprehensive Plan. The hazard inventory is considered an update to the initial 1997 WHPP hazard inventory. The Hazard Inventory Update report (May 2005) is included in Appendix M. During the 2005 Update, few changes were identified since the 1997 WHPP, indicating that non-point sources of known and potential contamination remain generally unchanged from those previously identified, namely residential development, transportation corridors, and industrial and commercial development. A review of environmental databases was also performed to update the list of known and potential point-sources of contamination. A review of more than 40 local, State, and Federal databases documented a total of 39 sites of known current or historic contamination and 22 sites of potential contamination. An additional ten sites of potential contamination were identified during a field verification effort.

Most of the sites of known contamination identified during this update are reported to have been cleaned up or are currently undergoing remediation. Three sites within the 10-year time-of-travel (Zone 3) of District wells are awaiting cleanup. One site (Site 8) is currently on the Washington State Hazardous Sites List and within the 5-year time-of-travel (Zone 2) of Well 9. This site has already received some level of remediation; however, the No Further Action designation from Ecology is currently under review and the District will make efforts to stay informed as to the status of this site.

Protection Strategies and Implementation Tasks

The protection plan for the District's wells includes 18 protection strategies, 34 implementation tasks, a spill response plan and a contingency plan. The success of the plan is based upon monitoring the existing system, active data collection and management by the District, and cooperation with those state and local agencies which regulate potential contaminants.

6.9 Purchased Water Management

Some of the water purchased from adjacent purveyors is sourced from groundwater and some is sourced from surface water. Each of the adjacent purveyors has implemented groundwater and surface water protection plans as appropriate. As such, the District relies on their water protections plans and does not provide or oversee any additional protection of their water sources or supplies.

Chapter 7 Maintenance and Operations

7.1 Introduction

A maintenance and operations program is required for all water systems per WAC 246-290-320. This chapter provides an overview of the water system responsibility and authority, system operation and control, water quality monitoring, emergency response and cross-connection control. More information regarding certain programs is available from the District and has been referenced in this chapter.

7.2 Management and Operations Responsibility

The responsibilities for the day-to-day management of Lake Meridian Water District's (District) water system including operation, maintenance and administration are listed below.

7.2.1 Board of Commissioners

There are three elected Commissioners, each serving six-year terms. The Board of Commissioners holds regular meetings at the District office on a schedule established by the Board. A record of all resolutions adopted by the Board is maintained at the District office.

The current elected commissioners are:

	Term Expires
Charles Wilson	December 2025
Gary Cline	December 2027
Patrick Hanis	December 2023

7.3 District Management Team

The key Lake Meridian Water District (District) team member positions are described below. A copy of the District's organizational chart is included as Figure 7-1.

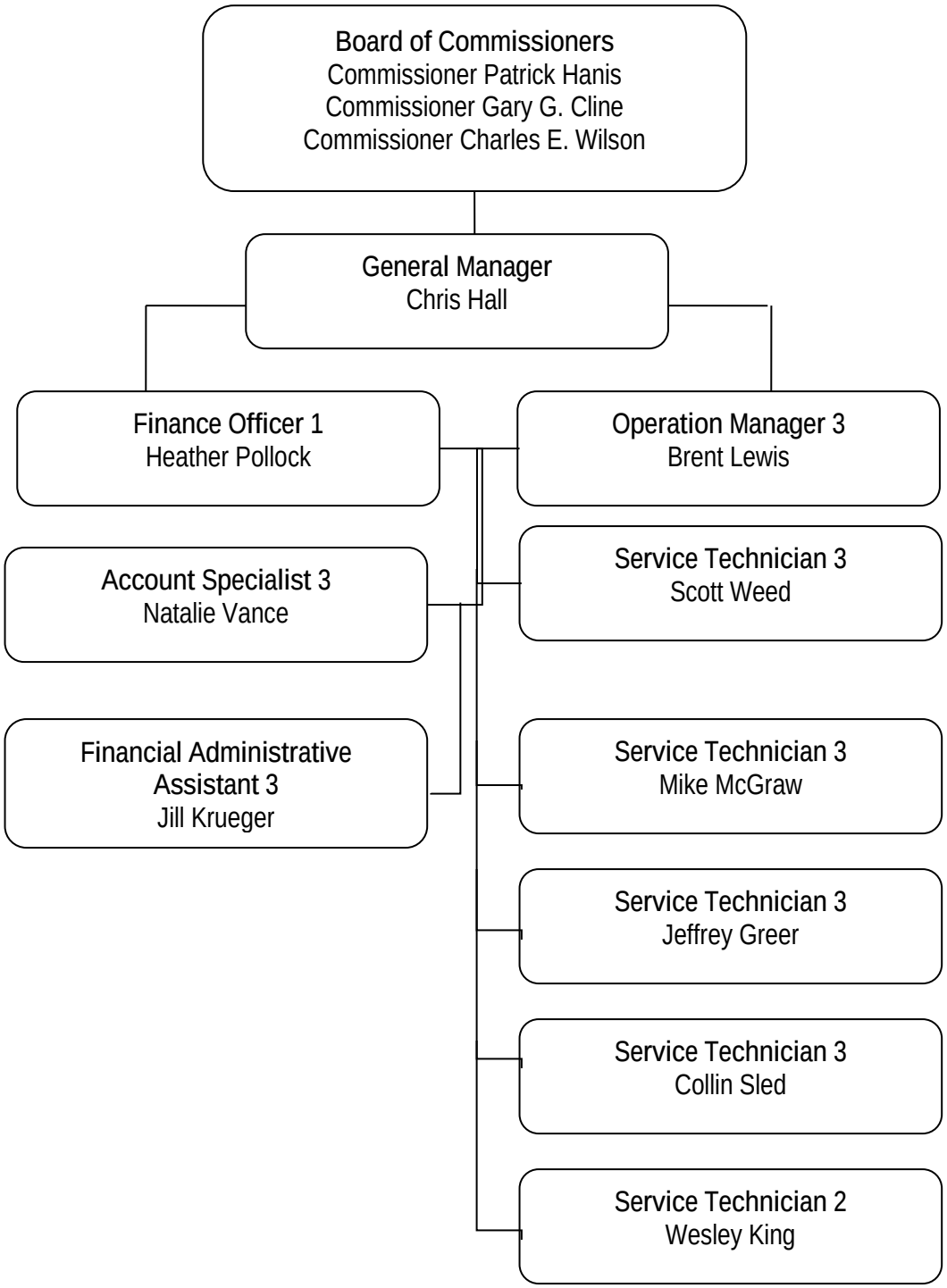

Figure 7-1 Organization Chart

7.3.1 General Manager

Chris Hall – 18 years with the District:

- Integrates engineering, legal, and accounting services into effective procedures.
- Implements policies and is responsible to the Board of Commissioners.
- Directs the implementation of short and long-term plans for maintenance, operation, finance, expansion, and personnel administration.
- Provides leadership and direction to all staff, ensuring Board policies and the employee handbook are understood and carried out throughout the District operations.
- Serves as representative of the District to the public, other jurisdictions and to State and professional organizations.
- Supervises the preparation of the annual budget and makes recommendations to the Board on the allocation of resources and priorities.
- Coordinates with engineer and financial personnel in development and administration of the District Comprehensive Water Plan.

7.3.2 Finance Officer 1

Heather Pollock – 0 years with the District:

- Reports to and works under the direction of the General Manager.
- Responsible for customer service, developer assistance, general accounting, administration supervisor back up and back up relief duties for customer service representative.
- Duties include accounting activities involving the general ledger system, coordinating required documentation and following progress through completion of plat developments with state, county and local government agencies and with legal and engineering advisors, processing water availability letters for developers and coordinating with various developers and supervisor on capital facilities charge revenue projections for capital project funding.

7.3.3 Account Specialist 3

Natalie Vance – 21 years with the District:

- Reports to and works under the direction of the General Manager.
- Responsible for customer service, front desk and telephone functions, utility billing, and work order preparation.
- Performs a variety of accounts receivable and cash receipt accounting functions.
- Assists coordinating field and office services.

7.3.4 Financial Administrative Assistant 3

Jill Krueger – 11 years with the District:

- Reports to and works under the direction of the General Manager.
- Assists Account Specialist in front desk and telephone functions, utility billing, and work order preparation.

- Responsible for developer assistance and back up relief duties for Finance Officer.
- Duties include accounting activities involving the general ledger system, coordinating required documentation and following progress through completion of plat developments with state, county and local government agencies and with legal and engineering advisors, processing water availability letters for developers and coordinating with various developers and management staff.

7.3.5 Operations Manager 3

Brent Lewis – 6 years with the District:

- Reports to and works under the direction of the General Manager.
- Responsible for District field service crew leadership, supervision, contractor-developer relations, engineering field inspection and liaison, drafting and other functions.
- Duties include attending board meetings, trouble shooting, telemetry alarms, coordinating maintenance and repairs with District and contractor crews and carrying out back up and relief duties at the direction of the General Manager.

7.3.6 Water Service Technician 3

Scott Weed – 33 years with the District:

- Reports to and works under the direction of the Operations Manager.
- Performs a variety of duties essential to the operation of the water treatment plant, wells, pump stations and filters according to Washington State Department of Health regulations.
- Is responsible for the Districts Cross Connection Control Program.
- Exercises considerable independent discretion and judgment in matters related to work procedures and methods.
- Acts as a lead person on projects.
- Perform back up and relief duties at the direction of the Operations Manager.

7.3.7 Water Service Technician

Mike McGraw, Water Service Technician 3 – 19 years with the District

Collin Sled, Water Service Technician 3 – 12 years with the District

Jeffrey Greer, Water Service Technician 3 – 1 year with the District

Wesley King, Service Technician 2 – 2 years with the District

Currently vacant, Water Service Technician 2

All these positions report to and works under the direction of the Operations Manager.

They are responsible for customer service, meter reading, water quality testing, main and service locates, installation and repair of meters, service line and main line repairs, landscape maintenance, contractor relations, and inspection and engineer data collections.

7.3.8 District Engineering Consultant

BHC Consultants, LLC
Madison McCrosky, P.E.
District Consulting Engineer

7.3.9 District Attorney

Inslee, Best, Doezie & Ryder, P.S.
Curtis Chambers, District Attorney
3 years' service

7.4 Certification Status

The State regulation (WAC 246-292-020) requires certified operators for certain positions. Personnel certified as waterworks operators by the State of Washington are summarized below.

Employee	Certification(s)
Chris Hall	Water Distribution Manager III Water Treatment Plant Operator II Water Distribution Specialist Cross Connection Control Specialist Basic Treatment Operator
Brent Lewis	Water Distribution Manager III Water Treatment Plant Operator I Cross Connection Control Specialist
Scott Weed	Water Distribution Manager II Water Treatment Plant Operator I Water Distribution Specialist
Mike McGraw	Water Distribution Specialist Water Treatment Plant Operator I Cross Connection Control Specialist
Collin Sled	Water Distribution Manager III Water Treatment Plant Operator II Cross connection Control Specialist
Jeffrey Greer	Water Distribution Manager II Water Treatment Plant Operator I Cross connection Control Specialist
Wesley King	Water Distribution Manager I Water Treatment Plant Operator I

7.5 Professional Development

Each certified operator must demonstrate continuing professional growth in the field for certification renewal. It is the operator's responsibility to see that this professional growth requirement is satisfied, and the District's responsibility to allow the opportunity for the operator to accomplish this. The professional growth requirements for waterworks certified operators can be obtained by various means, including:

- Accumulation of a minimum of three (3) continuing education units (CEU's) through completion of short courses, correspondence courses and other courses offered through community colleges, attendance at workshops and/or seminars.
- Advancement to a higher level of certification by examination.
- Achievement of certification of a different classification in the Waterworks Operator Certification Program.
- Attendance at American Water Works Association (AWWA), American Public Works Association (APWA), and Washington Association of Sewer and Water Districts (WASWD) sponsored seminars is encouraged by the District, as is course work available through the Washington Environmental Training Resource Center (WETRC) at Green River Community College. Tuition for job related seminars and classes are paid for by the District.

The District provides a wage increase incentive for higher levels of certification up to a maximum of $80 per month.

Field Employee	Wage Increase per Month
Water Distribution Specialist	$20.00
Basic Treatment Operator	$20.00
Cross Connection Control Specialist	$30.00
Water Distribution Manager I	$20.00
Water Distribution Manager II	$30.00
Water Distribution Manager III	$40.00

7.6 System Operation and Control

7.6.1 Systems Operations and Maintenance Program

Identification of System Components

The information regarding system components is in Chapter 1 of this document – Description of Water System.

Routine System Operation and Preventative Maintenance

The key to routine operation is the ongoing maintenance of all facilities and equipment. All facilities and equipment are checked in accordance with manufacturers' specifications. Lubrication and maintenance charts are provided for each piece of equipment. The following is an overview of the operation and maintenance for facilities and equipment.

Operations Description

The flat nature of the terrain in the District permits a single pressure zone system; over 70 miles of pipeline are included. The District has three reservoirs, including a 150,000-gallon elevated reservoir, a 2.0-million gallon (MG) standpipe and a 2.0 MG ground level concrete reservoir. The District operates groundwater wells and uses the Covington intertie as the primary supply. Additional descriptions of the District's supply wells, and the Covington intertie are included earlier in the document.

Groundwater Sources

The overall quality of the groundwater sources is generally good, with the exception of higher concentrations of manganese, iron, and hydrogen sulfide. Manganese concentrations exceed the recommended level of 0.05 milligrams per liter (mg/l); at these levels, the manganese may cause bad tastes in the drinking water and stains on laundry and plumbing fixtures. Hydrogen sulfide levels of 0.2 mg/l have also been measured, as well as iron levels above 0.3 mg/l. The rotten egg odor of hydrogen sulfide can be detected at concentrations even less than this level. Treatment is provided for these three parameters. Water filtration treatment plants were constructed at the four primary production wells to remove iron, manganese, and hydrogen sulfide from the water.

Sufficient chlorine is fed before filtration to meet the chlorine demand and leave a 1.0 mg/l residual after filtration entering the distribution system. Dosages can be manually adjusted, although the chlorinator is automatically controlled by the onsite chlorine monitoring equipment seeking a predetermined set point. The chlorine is produced onsite by sodium hypochlorite regeneration systems at the four primary wells (3, 5, 6, and 9). The district chooses to use onsite generation systems because of reduced costs and more importantly to protect the environment and the safety of the employees and public.

In addition to chlorine, fluoride is added at each of the well sites. Fifty-gallon fluoride saturators are provided for use with crystalline sodium fluoride. The tanks hold 300 pounds of sodium fluoride and require manual refilling at the 100-pound level. Water is automatically added by a float level switch and solenoid valve. The water flows up through the sodium fluoride to produce a 4 percent solution. This solution is pumped by a chemical metering pump into the water line after filtration.

Covington Water District Supply

The Covington intertie was developed to allow the District to purchase water on an ongoing basis to meet the daily and future demands in the District's water system. Water from Covington Water District is pumped to a flow control and metering station located at the East end of SE 288th Street and Highway 18 where it then enters a 16-inch transmission main which runs West on SE 288th Street to the intersection at 132nd Avenue SE. At this point the 16-inch transmission main enters the distribution system.

During normal operation, Covington Water District can deliver a continuous flow rate up to a maximum of 833 gallons GPM over 24 hours. The flow rate is set at seven hundred fifty thousand (750,000) GPD and at the District's option, up to a maximum of one million (1,000,000) GPD for the time period of October 1st through May 31st and a minimum of one million (1,000,000) GPD, and at the Districts option, up to one million two hundred thousand (1,200,000) GPD for the time period of June 1st through September 30th. The Covington intertie has the capacity to provide substantially higher flows if needed in the future.

The District receives its water from 3 intertie station vaults which have telemetry to monitor actual conditions. The District provides for the collection and transmittal of several operating parameters at its intertie stations including flow rate, pressure, chlorine residual, and standard security signals. The existing telemetry system at the reservoir site accepts and records this data continually.

District personnel visit the Covington intertie stations on a daily basis excluding weekends and holidays. District personnel verify proper operation of the intertie stations to ensure water quality and flow parameters are met.

1300 Reservoir – 2.0 MG Ground Level Reservoir at the District's Reservoir Site

The 2.0 MG ground level reservoir, also referred to as the 1300 Reservoir, at the District's reservoir site consists of a partially buried structure. The overflow elevation for this structure is 543 feet. This reservoir operates by a pump station which pumps directly into the existing 2.0 MG standpipe (1200 Reservoir) or allows for pumping directly into the system. Normal operation allows for pump discharge directly into the 2.0 MG standpipe. The pump station pumps directly into the system when the 2.0 MG is removed from service for cleaning and maintenance. During this operation sequence, it is imperative that the 0.15 MG elevated reservoir (1100 Reservoir) be on-line to avoid excessive system pressures and transients. The ground level reservoir fills by system pressure during off peak hours and pumps directly into the 2.0 MG standpipe during peak hours to act as equalizing storage. Control valves on all three reservoirs allow for integral operation of the reservoirs even though they all have different overflow elevations. Additional discussion of the reservoir operations is included earlier in this document.

The District implements a management approach to make decisions on the operation of the ground level reservoir. These decisions are:

1. Levels of set points in the standpipe which dictate when the ground level reservoir pump station begins to replenish the standpipe and elevated.
2. Working range of the ground level reservoir based upon turnover in this structure.

A pressure sustaining valve will control the levels in the ground level reservoir, with telemetry logic which precludes valve operation during events in which the pump station is replenishing the standpipe reservoir.

The District monitors several operational parameters of the ground level reservoir, including chlorine residual of the discharge, control valve status, overflow alarm and standard security monitoring.

The operating parameters of the pump station include duplex pumps with variable frequency drives and emergency onsite power supply. Given the relatively small differential of system hydraulic gradeline of the ground level reservoir and the standpipe, the pumping costs of this system are negligible.

7.6.2 System Control

Operations of the Reservoirs, Wells, and Interties

The monitoring and control of all three reservoirs, all well sites, and the interties is done through radio telemetry at the control building located at the District's reservoir site.

The existing programable logic controllers (PLCs) automatically monitor the water systems including water levels, flow rates, chemical dosages, and pressures. Control parameters have been established which enable the operation of the water supply system. The Supervisory Control and Data Acquisition (SCADA) alarm system monitors those parameters, ensuring that a failure in the system contacts the operator on call, so that they may correct the problem.

The existing wells operate from monitored reservoir levels. Assignments for well operating positions are made based on expected daily demands and aquifer management. The existing wells will continue to operate essentially like current operating procedures.

7.7 Routine Preventative Maintenance

The key to routine operation is the on-going maintenance of all facilities and equipment, which are checked in accordance with manufacturer's specifications. Lubrication and maintenance charts are provided for each piece of equipment. The following is an overview of the maintenance schedules for facilities and equipment.

7.7.1 Daily Facility Maintenance

Each operating well and pump station is visited daily Monday through Friday. Holidays, weekends and after hours are monitored with the telemetry system which communicates with SCADA alarm to call out on call personnel.

- All pumps are checked.
- Chemical levels are checked.
- Inspection for any visible leaks.
- Inspection for any visible tampering or trespass.
- Any clean up necessary is performed.
- Daily samples and readings are taken.

7.7.2 Weekly Facility Maintenance

- Generators are exercised.
- Chlorine/pH monitors are inspected.
- Well depths are checked.
- Filtration plants are checked and verified.

7.7.3 Bi-Monthly Facility Maintenance

- Bacteria samples are taken and sent to lab for analysis twice a month. Twenty samples are required per month.

7.7.4 Monthly Facility Maintenance

- Customer meters are read allowing general system observations (half of the customer meters are read one month and the other half are read the following month).

- Any extraordinary change in usage or high usage is identified and customers are contacted for potential leaks.
- All reservoir tank vents and screens checked by operations.

7.7.5 Annual Facility Maintenance

- Electrical analyses are performed by an outside firm.
- Dead end water lines are flushed.
- Test alarms and verify if telemetry is operational.
- Exercise valves – half of the valves are exercised one year, and the other half are exercised the following year.
- Inspect all chemical feed systems.
- Fire hydrants – half of the hydrants are exercised one year, and the other half are exercised the following year.
- Fire hydrants are cleaned and painted every 5 years.

7.7.6 Reservoir Inspection and Maintenance

- The reservoirs will be inspected by certified divers every 5 years and cleaned as needed.
- All reservoirs were inspected in 2017 with services from a diver contractor and cleaning was performed with a vacuum system.

The next scheduled inspection of the reservoirs will be in 2022. The 1100 reservoir will need to be recoated within the next 10 years.

7.7.7 Water Quality Testing

The District follows the Water Quality Monitoring Schedule provided by Washington State Department of Health (DOH) and the sampling schedules from the Washington State Department of Ecology (Ecology). Water quality testing requirements and sample frequencies change annually. The District's Water Quality Testing Program is more fully explained in Chapter 4.

7.8 Equipment, Supplies and Treatment Chemical Inventory

7.8.1 Equipment

Table 7-1 lists the vehicles and equipment that the District currently owns.

Table 7-1
Motor Vehicles and Equipment

Item	Description
1	2011 Ford F350-Diesel
2	2015 Ford Explorer-Gas
3	2016 Ford F150-Gas
4	2016 Ford F350-Diesel
5	2010 Ford Ranger XL-Gas
6	2019 Ford F550-Gas
7	2021 Ford F-350-Gas
8	2021 Ford F-350-Gas
9	Torkl EX Util Torklift Trailer
10	Alumt EX GETR Portable Generator Trailer
11	Eagle Dump Trailer
12	HM Hull Fuel Trailer 500 Gallon

7.8.2 Supplies

The District maintains a complete inventory system of all supplies and parts in stock for the water system. The supplies and parts are located at the District office. The inventory is used in conjunction with the maintenance and/or repair of facilities within the District.

7.8.3 Treatment Chemicals

Table 7-2 lists the chemicals that the District currently keeps in stock.

Table 7-2
Treatment Chemicals

Item	Description
1	12.5% Liquid Chlorine
2	Sodium Fluoride Granules
3	Vila-D-Chlor Vitamin C Dechlorinator Tablets

7.9 Water Quality Monitoring

Currently the District uses four wells and the Covington intertie as its main supply. The District works to maintain water quality by meeting all state and federal water quality standards. The following text is a summary of water quality as it pertains to the operations program. The District's Water Quality Program is more fully described in Chapter 4.

7.9.1 Sampling Procedures

Under State Regulations for total coliforms, the number of samples a utility is required to collect each month to determine compliance under the Revised Total Coliform Rule is based on population served (including resident and non-resident population). Based on the District's population, it is required to collect samples at 20 locations each month.

The water sampling points are identified in the Bacteriological Monitoring Locations found in Chapter 4 (Table 4-3). Each sampling site has one primary location and three repeat locations as required by the State. These sampling points are located to represent different population concentrations, sources of supply, and storage facilities so that representative water samples can be taken. The District complies with all water sampling and monitoring requirements in accordance with DOH guidelines under WAC 246-290-300.

7.9.2 Violations Procedures

According to the Washington drinking water regulation WAC 246-290-480, DOH must be notified within 24 hours of the presence of coliform in a sample and by the end of the day when the purveyor is notified by the laboratory for the presence of fecal coliform or E. coli.

According to WAC 246-290-320, repeat samples must be collected whenever a sample is determined to be coliform positive. Within 24 hours of being informed by the laboratory of a coliform presence sample, a set of three repeat samples must be collected. One sample must be collected from the same sample site that the original coliform presence result came from. In addition, a sample must be taken from each of the additional repeat sites along with any sources online at the time of the original coliform present sample.

7.10 Emergency Response Program

The District has developed an Emergency Response Program to help the District identify, prepare and respond to emergency situations. The program includes elements such as an Emergency Response Plan, Vulnerability Assessment, Hazard Mitigation Plan, and a set of contingency plans to address specific situations such as severe drought. This program was developed in accordance with WAC 246-299-420. Through the individual planning elements of the program proposed improvements were identified to increase the protection of the District's critical infrastructure. To assist in the implementation of these improvements, a grant from the Department of Homeland Security was secured.

In March 2005, the District completed their Emergency Response Plan in response to the 2002 Bioterrorism Act. The Emergency Response Plan includes system specific information, explanation of roles and responsibilities, communications procedures, emergency contact lists, situation specific action plans, identification of alternate water sources, and information on personnel safety.

In 2021, the District updated its Emergency Response Plan per the new requirements of the American Water Infrastructure Act (AWIA) of 2018. Updates included integration of findings from the District's Risk and Resilience Assessment, also completed as required by AWIA Section 2013.

7.10.1 Emergency Call-Up List

The District's telephone number (253) 631-3770 is utilized during and after office hours. The District utilizes an answering service during off-hour operation. Customers calling at this time are referred to the answering service. The appropriate personnel will be contacted during an emergency situation, as one field employee is on-call after working hours. In the event of a major emergency which requires a response that is outside of the District's normal operating structure, the District's response will be based on the Incident Command System (ICS). Further information regarding the ICS or the District's Emergency Response Plan can be obtained from the District office.

7.10.2 Vulnerability Assessment

The District has completed a Vulnerability Assessment. The Vulnerability Assessment focuses on manmade disasters such as attacks that disrupt the ability of the system to provide safe, reliable drinking water, as required by the U.S. Bioterrorism Act. The District's Vulnerability Assessment is not available for public view.

Security measures protect all District facilities, including the headquarters and remote sites such as pump stations and reservoirs. Doors and entrances to all facilities remain locked when not in use. All access ladders are fitted with a locked panel and are protected by metal cages in order to discourage access by unauthorized personnel. Pump stations and buildings are also monitored for intrusion and smoke. Any incidence of alarm would result in notification and call out of the on-call person. The District has not experienced any significant problems with vandalism or interference with facility operations by unauthorized personnel.

Portions in the District have watermains crossing creeks, wetlands, or seismic hazard area. The vulnerability of these facilities to a total loss of service has been reduced, for the most part, by looping the system, allowing for portions of the system to be isolated and the direction of water flow changed. Small areas may be out of service due to a watermain failure, but the disruption would be minor.

In cases of broken watermains, the areas affected could be isolated so that water service to other customers would be maintained. In most instances, buildings and houses inside the area without water could be jumped from hose bibs outside the affected area. Therefore, if the system were to be shut down for a considerable amount of time for repairs, water service could still be provided.

The District's reservoir site is equipped with a seismic monitor and all reservoir discharge lines are metered. The District continuously monitors the site for seismic activity and flow to and from the reservoirs. If a combination of a seismic event and excessively high flow rates from the reservoir site are observed, the District may opt to isolate two of their reservoirs until they can respond to the site to evaluate for potential damage.

7.10.3 Hazard Mitigation Plan

The District updated its Hazard Mitigation Plan as an annex to the 2020-2025 King County Regional Hazard Mitigation Plan. The Hazard Mitigation Plan focuses on natural disasters such as earthquakes and outlines measures the District will take to reduce risks of damage to its facilities and reduce service disruption impacts to customers.

As part of the Hazard Mitigation Plan, developed two Hazard Mitigation Strategies: Earthquake Resiliency and Emergency Preparedness. The District has included the highest priority projects related to mitigation of a seismic event in the CIP in Chapter 8.

7.11 Safety Procedures

Employee assistance is needed by the District in its efforts to ensure the safety of all employees. Employees should observe the special safety rules of their work area as well as the following general rules of safety at all times.

- Report any injury, safety hazard or damage to property immediately to a supervisor or general manager.
- Keep individual work area clean and orderly. Untidiness and clutter invite accidents.
- Do not smoke or permit others to smoke in “No Smoking” areas.
- Know and follow the established safety rules. When in doubt, ask before proceeding.
- Do not allow unauthorized persons to operate equipment or have access to restricted areas.
- If assigned to a job requiring protective clothing or equipment, use it without fail. Always dress in a way that will not invite job-related injuries.
- Store all materials and equipment in their proper areas.
- Bring potential safety hazards to the attention of a supervisor when found.
- Never run or engage in horseplay on District property.
- Drive safely and courteously when operating District vehicles.
- If lifting heavy objects, do so properly and with the appropriate number of persons.

7.12 Cross-Connection Control Program

A Cross-Connection Control Program is required for the District’s system by WAC 246-290-490. The District’s Board of Commissioners adopted the most recent Cross-Connection Control Program through Resolution No. 514-05-07 on May 10, 2007.

The new program requires all new water service connections to have a signed service agreement as a condition of service. For customers supplied prior to the adoption of the resolution in Appendix J, an implied service contract allows the District to protect the distribution system from contamination through a system-installed backflow prevention assembly on the customer’s service line.

The purpose of the Cross-Connection Control Program is to protect the health of water consumers along with the District's water system by assuring the inspection and regulation of plumbing in existing and proposed piping networks and the proper installation and surveillance of backflow prevention assemblies when actual or potential cross-connections exist and cannot be eliminated.

When an existing cross-connection poses a potential health or system hazard, the District shall shut off water service to the premises until the cross-connection has been eliminated or controlled by the installation of a proper backflow prevention assembly. The Cross-Connection Control Program manager for the District shall be notified when a service has been shut off.

The District maintains an inventory and status list of each device in operation. The District has prioritized the customers or businesses in need of required devices.

In order to facilitate efficient work scheduling of the Cross-Connection Control Program, the District maintains a file for the Cross-Connection Control Program requirements for backflow prevention, assembly, installation and testing, private fire protection systems connected to public water systems, enforcement of cross-connections and backflow prevention assembly installation agreements.

Further information regarding the Cross-Connection Control Program can be obtained from the District office.

7.13 Customer Concern Response Program

Responding to customer concerns or inquiries has been a long-standing priority in the District. Personal contact as to the inquiry or concern is always made, usually within the same workday. The following steps are taken when a customer concern or inquiry is received:

- Upon receipt of an inquiry or concern a work order is generated.
- A field representative is assigned to the work order to investigate the inquiry or concern.
- The field representative interfaces with the customer and/or investigates the problem and information or justification is noted on the work order form and given back to the office.
- All inquiries or concerns are documented and any dealing with water quality are charted on the District's working map in the office.
- The District personnel evaluate each occurrence with flexibility to best meet customer and District needs.
- All work orders are reviewed weekly by the superintendent.

7.14 Record Keeping and Reporting

Evaluation of system performance is an integral part of District operation. The following data is maintained in the District's record keeping system.

A 24-hour pumping log provides a complete record of pump running time and flow for each of the four system wells.

Tank levels at all three reservoirs are monitored continuously by the District's telemetry.

Aquifer levels are monitored and a log is maintained of the data recorded.

Chlorine, fluoride, iron and manganese forms are utilized for chemical monitoring and process control. The data is sent to DOH monthly and includes both a record of daily chemical use and a summary of chemical analyses conducted in the water system. The District also maintains a record of free chlorine, fluoride, iron and manganese on a daily basis.

The District maintains a detailed flushing log describing the length of time required to flush the lines, water flushed, the nature of the flushed water (color, etc.), and any problems encountered. This is used to account for non-revenue water as part of the District's Conservation Program.

Manufacturers' operation and maintenance manuals are utilized for preventative maintenance and equipment repairs.

Customer concerns and inquiries are recorded and data is kept in the District's record keeping system.

Records kept by the District are stored in a vault located at the District office. The records are kept for the length of time as specified by the DOH.

7.15 Operation and Maintenance Improvements

The District strives to provide the best available tools and training to assist District Staff with the management, maintenance and operation of the District's system. As part of this goal, the District plans to implement two programs to assist in asset management.

The District is planning on conducting an AC Pipe/Service Line Study. The purpose of the study will be to provide valuable life cycle information about the District's current facilities and assist the District in prioritizing replacement projects involving existing AC pipe.

The District is currently developing and will be implementing a Geographic Information System (GIS) and Asset Management System. The GIS and Asset Management System will be used to track improvements, schedule maintenance, and will also be used as a financial and asset management tool.

Chapter 8 Capital Improvement Program

8.1 Capital Improvement Program Description

This chapter describes the improvements necessary for meeting the District's future water system needs for the next 20 years, corresponding to the period of the District's Capital Improvement Program (CIP). DOH recently extended the Water System Plan (WSP) approval period to 10 years from 6 years, so this CIP is a 10-year CIP. Planned system improvements are driven primarily by the District's Policies and Criteria described in Chapter 3.

It should be noted that the specific needs of the District must be evaluated on an ongoing basis. Significant thought has gone into the analysis of improvements to select the most cost-effective plan of action that meets the District's future needs. However, as growth and land use patterns are likely to vary from neighborhood to neighborhood over the planning period, the size and timing of necessary projects may differ from the recommendations in this Plan. Consequently, additional facility requirements will likely be identified as part of ongoing facility planning efforts.

8.2 Capital Improvement Projects

The improvements identified and discussed in this chapter represent the projects identified through water system modeling as well as projects relating to known issues and changes to the water supply in the next couple of years. A comprehensive list of suggested projects and the preliminary opinion of probable project cost based on 2021 dollars are listed in the sections below. The opinions of probable cost are based on prices provided by the District from projects they have recently completed.

All identified projects belong to one of the following categories:

1. Interlocal agreements and interties.
2. Water main replacements and extensions.
3. Tanks and reservoirs.
4. Future supply.
5. Miscellaneous projects and studies.

Each identified project also belongs to one of two priority classifications: short-term or long-term. Short-term projects are expected to be constructed within the next 10 years (2021-2030). Other identified projects that are not expected to be constructed during the next ten years but are planned to be constructed during the 20-year planning period, are classified as long-term projects.

Each capital improvement project has been assigned an identification number, and these numbers have been used in the narrative in this chapter, as well as the associated graphics and tables. The tables also provide a preliminary opinion of probable cost for each project based on January 2021 dollars. These cost opinions are for the total cost of the project including design and construction.

- Table 8-2 shows the distribution and transmission replacement and extension projects planned for the next 10 years.
- Table 8-3 shows the distribution and transmission replacement and extension projects planned for the next 10-20 years.

- Table 8-4 shows the distribution and transmission replacement and extension projects specifically accounting for existing and future fire flow deficiencies.
- Table 8-5 provides a summary of the District's capital improvement projects for miscellaneous capital projects planned for the next 10 years.
- Table 8-6 lists new pressure zones to be created in the system.
- Table 8-7 lists capital projects related to inter-local agreements, interties, and studies.
- Table 8-8 lists capital projects related to tanks and water supply and distribution.
- Table 8-9 provides a summary of all planned CIP projects for the next 10 years.

In addition to these tables, each capital improvement project is shown in Figure 8-1 at the end of this chapter. Table 8-5 also acts as a key for Figure 8-1.

All projects identified in this Plan are meant to provide an adequate water supply and improved water quality within the District's water service area, both now and in the future. Although the timing and extent of the future needs cannot be predicted with certainty, these planned improvements should provide adequate service in accordance with recent land use policies and current zoning. The future system is schematic only, especially in areas not yet developed. Proposed facilities and watermains may change configuration as development occurs and as land use policies change. Therefore, these identified improvements are meant only as a guide to planning.

8.3 Cost Estimate Methodology

The planning-level opinions of probable costs prepared as part of this Capital Improvement Program are provided for guidance in project evaluation, funding, and implementation using available data at the time. The project cost opinions are presented in January 2021 dollars. The District indexes their Capital Improvement Program annually. The index is usually determined by a review of the Seattle Construction Cost Index from the Engineering News Record and a review of the costs of similar local size and scale projects.

The project costs listed in this Plan are planning-level opinions of average project costs. These opinions are approximate average costs for similar types of projects. The opinions do not consider individual variables related to particular projects which could significantly affect costs. For example, a project in close proximity to a wetland might have an above-average cost due to costs associated with protecting the wetland. Likewise, a project located on a seldom used private road might have a lower-than-average cost because of the reduced need for traffic control. For this reason, "project-specific" opinions of probable cost should be prepared prior to initiating any specific projects to address these unaccounted-for variables. Additionally, capital costs for the various projects listed should be adjusted to account for inflation rates applicable to the proposed design and construction schedules.

The opinions of probable cost are primarily based on recent project costs provided by the District. The cost of any given project can vary by region, so the District decided to base their CIP costs on projects they recently completed. Pipe replacement project costs were calculated based on a unit price per lineal foot (Table 8-1). The unit price for an 8-inch and a 12-inch ductile iron pipe replacement were provided by the District.

Table 8-1
Pipe Replacement Unit Cost

Proposed Diameter (in)	Unit Construction Cost per LF
8	$400
12	$400

8.4 Water Main Replacements and Extensions

The District recognizes that specific development projects will require extension of the current pipe network. Other extensions will be primarily through installation of watermains that may include looping (service from two directions) to provide reliable service and enhance fire protection (CIP No. 2). Table 8-2, Table 8-3, and Table 8-4 list the proposed new main extension projects. The District will continue to support oversizing opportunities with developer extensions.

The condition of the system is hydraulically strong with the assumption that the system will be connected to the RWSS supply through Covington Water District and retains the right to purchase water from City of Auburn and the RWSS directly. Therefore, the District can proceed with a water main replacement program on a reasonable schedule and as funding allows. The water main replacement projects were prioritized based on the following criteria listed in order of priority:

- Hydraulic continuity bottlenecks
- Leak history
- Size
- Age of pipe
- Material

8.4.1 AC Main Replacement Program

The existing asbestos cement (AC) water mains are shown on Figure 8-2 at the end of this chapter. The District intends to replace AC mains within the system by implementing an AC Main Replacement project every two years. The District encourages these replacements as the AC main is subject to failure in a natural disaster, as identified in the District's Hazard Mitigation Plan. The projects may be funded by the District, a developer, as part of a ULID, or by other means or a combination of these methods. Specific AC main replacement projects are included in Table 8-2.

8.4.2 Summary of Replacement and Extension Projects

The short-term distribution and transmission replacement and extension projects are shown in Table 8-2, long-term replacement and extension projects are shown in Table 8-3 and Table 8-4, and all water main replacement and extension projects are shown in Figure 8-1. Pipe sizes are the minimum acceptable diameter, assuming the pipes are looped as shown in Figure 8-1. Larger diameters may be necessary if only a portion of the pipe is constructed, if higher than anticipated demands are required, or ground elevations vary from those used in the hydraulic analysis.

Table 8-2
Water Main Replacement or Extension
0-10 Years

CIP No.	Project Location	Proposed Dia. (in)	Length (ft)	Total Project Cost	Year
R16D	148th - 152nd to 268th	12	760	$304,000	2029
R16E	Lk Meridian Park loop	12	550	$220,000	2029
R22A	132 - 240th to 256	12	5,230	$2,092,000	2031
R24A	132nd - 256th to 263rd	12	2,350	$1,012,000	2031
R24B	132nd - 263rd to 270th	12	2,100	$840,000	2031
R29A	132nd - 272nd to 278th	12	1,990	$796,000	2031
R29B	SE 272 - 131st to 132nd	12	370	$148,000	2031
R30A	138th Pl - 269 to end	8	1,160	$464,000	2029
R30B	SE 266 - 134th to 138th Pl	8	910	$364,000	2029
R30C	SE 267 - 138th Pl to end	8	320	$128,000	2029
R30D	SE 268 -138th Pl to 137th	8	520	$208,000	2029
R30E	135th - 266th to end	8	200	$80,000	2029
R44A	Alpine Vista/152/148th	8	1,200	$480,000	2029
107.037	254th Intertie w/Covington	8	1,200	$400,000	2022-2023
ST 1	Miscellaneous AC Main Asset Replacement	NA	NA	$1,050,000	2023, 2026-2031
R50A	SE 256th - 124th Ave	12	559	$223,400	2025-2026
ST 2	"Loop closures" from developers	NA	NS	$100,000	Ongoing
		TOTALS	18,860	$8,430,620	

Table 8-3
Water Main Replacement or Extension
10-20 Years

CIP No.	Project Location	Proposed Dia. (in)	Length (ft)	Total Project Cost	Estimated Year
24	141st - 272nd to 276th	8	1,280	$672,000	2031
25	SE 261st - 132nd to 135th	8	820	$430,500	2031
26	SE 276 - 146th to 148th	8	1,420	$745,500	2031
27	145th - 276th Pl to end	8	380	$199,500	2031
28	146th - 276th Pl to 275th Pl	8	340	$178,500	2031
29	SE 258th - 124th to end	8	1,340	$703,500	2031
30	126th - 127th to end	8	1,190	$624,750	2031
31	127th Pl - 258th to end	8	700	$367,500	2031
32	136th - SE 256th to end	8	990	$519,750	2033
33	SE 259th Pl - 140 to 257th	8	1,510	$792,750	2035
34	142nd Ave SE - 259th Pl to end	8	200	$105,000	2035
35	143rd Pl SE - 260th to end	8	310	$162,750	2035
36	150th Pl - 256 to end	8	750	$393,750	2033
37	SE 255th - 150th Pl to 151st Pl	8	330	$173,250	2033
38	144th - 275th Pl to 277th	12	540	$332,640	2033
39	Kent Kangley - 124th to 131st	12	2,980	$1,835,680	2041
40	MVCC AC Replacement	8	22,000	$11,550,000	2042
		TOTALS	37,080	$19,787,320	

Table 8-4
Water Main Replacement or Extension for Fire Flow Velocity Deficiency Projects

CIP No.	Project Location	Existing Dia. (in)	Proposed Dia. (in)	Length (ft)	Total Project Cost	Priority
41	SE 242nd St at 135th Ave SE	4	8	115	$60,375	Long Term
42	142nd Avenue SE	6	8	1,180	$619,500	Long Term
43	141st Place SE	6	8	440	$231,000	Long Term
44	SE 255th Street	6	8	340	$178,500	Long Term
45	SE 255th Street	6	8	440	$231,000	Long Term
46	132nd Pl SE, SE 249th St, and SE 248th Pl off of 132nd Ave SE	6	8	1,250	$656,250	Long Term
47	SE 246th St and 129th Pl SE	6	8	650	$341,250	Long Term
48	144th Pl SE	6	8	390	$204,750	Long Term
49	Soos Creek Estates	8	12	560	$344,960	Long Term
50	Country Glen Apartments	8	12	1460	$899,360	Long Term
51	Weatherly Inn off 272nd	8	12	690	$425,040	Long Term
52	15423 SE 272nd St, Kent, WA 98042 (commercial building)	8	12	905	$557,480	Long Term
53	Stonebridge Community - SE 268th St	8	12	1,120	$689,920	Long Term
54	Marketplace at Lake Meridian	8	12	1,760	$1,084,160	Long Term
55	129th Ave SE	8	12	880	$542,080	Long Term
56	Businesses southwest of SE 272nd St & 132nd Ave SE	6 - 8	12	4,090	$2,519,440	Long Term
57	152nd Ave SE	8	12	410	$252,560	Long Term
58	SE 276th St	6	8	440	$231,000	Long Term
			TOTALS	17,120	$10,068,625	

8.5 Loop Closure Program (No. 23)

The District has an annual program to connect dead-end lines within the system to complete loops. This program improves water quality and fire flow. This program is not identified on the CIP map.

8.6 Miscellaneous Capital Projects

8.6.1 AC Pipe/Service Line Study (No. 65)

The District conducts an AC Pipe/Service Line Study in alternating years as part of the future CIP. The purpose of the study is to perform a water system replacement evaluation that will provide important life cycle information about the District's current water system inventory. This information will be used by the District to establish a systematic approach that will prioritize replacement projects. The study will consist of both non-destructive and destructive testing of existing AC mains within the District's system. The non-destructive testing will consist of obtaining water samples at various locations in the system and conducting water quality tests to determine how the water characteristics may impact the existing piping. The destructive testing will consist of taking samples of existing AC pipe and conducting structural tests using a certified testing laboratory. The information obtained from the destructive testing will be compared against tests conducted on new AC pipe and AC pipe industry standards to determine the pipes' performance in the District's system.

8.6.2 GIS/Asset Management Project Phase 2 (No. 75)

The District has developed and begun implementing a GIS mapping system to assist the District with future asset management. The GIS system will actively track improvement projects, problem locations within the system, including water quality and leak problems, and system hydraulics. The GIS system will also contain all pertinent information about water system facilities such as pipe size, diameter, material, date of installation, and operating pressure. Information provided by the GIS system will be used by the District to assist in planning for future developments and required CIP projects.

Table 8-5
Miscellaneous Capital Improvement Projects

CIP No.	Description	Total Project Cost[1]	Year
59	Telemetry Upgrades	$285,571	Ongoing
60	AC Pipe/Service Line Study	$30,000	Alternating Years
61	Admin Building Improvements	$142,667	2021
62	Equipment Storage Building Improvements	$50,000	2021
63	Admin Covered Meeting Room	$50,000	2021
64	Water Analyzer	$64,837	2020
65	Chlorine Generation System Well 3	$20,000	2023
66	Chlorine Generation System Well 5	$20,000	2024
67	Chlorine Generation System Well 6	$30,000	2023
68	Chlorine Generation System Well 9	$30,000	2024
69	Chlorine (Chemical Feed) Pump Project Wells 6&9*	$29,829	2020
70	GIS/Asset Management Project Phase 2	$80,000	2021
	TOTALS	$832,904	

Note:
1) Total Project Cost provided by the District.

8.7 New Pressure Zones

An analysis of the system, discussed in Chapter 4, identified localized areas of low pressures that do not meet compliance standards. These conditions are mostly a product of localized ground elevation hills and valleys. The areas that show high water pressure are in lower lying areas of the water pressure zone and low pressure is seen in connections that are at higher elevations. Creating new pressure zones in those areas with pressure reducing valves (PRVs) and booster pump stations (BPS) would provide the District's customers with a water supply at the correct pressure.

8.7.1 New 625 Pressure Zone 2 (No. 76)

The area around SE 240th Street and 144th Avenue SE is a high point in the District which is causing low peak demand and fire flow residual pressures. Two alternative solutions are being explored to remedy this issue:

1. Install a new booster station that pumps from Zone 1 to Zone 2 to establish 625' HGL, approximately 400 feet of new water main, and four zone valves.
2. Repurpose the existing emergency intertie with Soos Creek to provide full-time supply for Zone 2, including approximately 760 feet of new water main and four zone valves.

It is anticipated that further studies will be conducted to determine the best alternative to create the new pressure zone. For cost purposes, Alternative 1 has been selected and used in the financial analysis.

8.7.2 New 616 Pressure Zone 3 (No. 77)

A section southwest of the existing tanks experiences low pressures during peak demand conditions. Two alternatives were considered for this area:

1. Reconfigure the existing transfer pump station to pump into Zone 3, add approximately 600 feet of water main and two zone valves.
2. Add the same changes as the first alternative above but add a new booster pump station instead that pumps water from Zone 1 into Zone 3 to establish a 616' HGL.

It is anticipated that further studies will be conducted to determine the best alternative to create the new pressure zone. For cost purposes, Alternative 2 has been selected and used in the financial analysis.

8.7.3 New 630 Pressure Zone 4 (No. 78)

The northeastern most corner of the District, starting at 152nd Avenue SE & SE 256th Street, also experiences low pressures. There are four proposed alternatives to boost pressures in this area:

1. Install individual booster pumps at each of the 5 homes that would not meet the minimum fire flow requirements of 1,000 gpm for 3 hours.
2. Instead of constructing a new zone, construct an additional intertie with Covington Water District and allot a portion of the District's pre-determined allowance to this intertie.
3. Construct an additional intertie with Covington Water District and create a new pressure zone by adding a zone valve and individual PRV's at customer homes.
4. Create a new pressure zone by installing a zone booster pump station and install individual PRV's at customer homes where pressure would exceed 110 psi.

It is anticipated that further studies will be conducted to determine the best alternative to create the new pressure zone. For cost purposes, Alternative 4 has been selected and used in the financial analysis.

8.7.4 New 635 Pressure Zone 5 (No. 79)

Several projects are needed in the southwest portion of the District near Auburn Mountainview High School to create a new 635 pressure zone to alleviate system deficiencies in the area. The proposed some is also referred to as "Zone 5." Re-zoning would be accomplished by:

- Installing 2 check valves and a direct feed across 132nd Avenue SE, from the 16" transmission main from the Covington intertie.
- Installing 1-2 emergency booster pumps which would pump water into Zone 5 from Zone 1 if the Covington intertie were out of service.
- Constructing a new 3 MG tank (T1400).

There are two options for how to supply the new Zone 5:

1. Fill the T1400 tank with a dedicated transmission main directly from the Covington intertie. The tank would supply pressure to Zone 5 and flow would leave Zone 5 into Zone 1 through two PRVs.
2. Fill Zone 5 using water from the Covington intertie and use the T1400 tank to boost fire flow pressures at the two schools in this zone.

It is anticipated that further studies will be conducted to determine the best alternative to create the new pressure zone. For cost purposes, Alternative 1 has been selected and used in the financial analysis. The District will consider implementing a special connection charge for Zone 5 in accordance with Policy 1.3 discussed in Chapter 3.

Table 8-6
New Pressure Zones

CIP No.	Description	Total Project Cost	Year
71	New 625 Zone 2	$1,872,000	2038
72	New 616 Zone 3	$1,796,000	2034
73	New 630 Zone 4	$850,000	2035
	New 640 Zone 5:		2023-2026
106.020.1	1400 Reservoir Pre-Construction	$170,000	2022
106.020.2	1400 Reservoir Design & Permitting	$1,745,000	2022-2024
106.020.3	1400 Reservoir Construction	$9,877,800	2024-2026
106.020.4	Zone 5 PRV/Booster Pump Stations Pre-Construction	$207,500	2022-2023
106.020.5	Zone 5 PRV/Booster Pump Stations Design & Permitting	$642,500	2022-2023
106.020.6	Zone 5 PRV/Booster Pump Stations Construction	$4,401,400	2024-2026
106.020.X	Zone 5 Piping Modifications	$690,500	2022-2025
106.020.7	1100 Reservoir Demolition	$120,000	2026
	TOTALS	$22,372,700	

8.8 Inter-Local Agreements/Interties, Studies

Projects identified as being related to service agreements or studies are listed in Table 8-7 below. These projects generally

Table 8-7
Inter-local Agreements / Interties, Studies

CIP No.	Description	Total Project Cost	Year
75	CFC Rate Study	$79,145	2021
76	Misc Cap - Engineering	$62,531	Ongoing
77	Misc Cap - Attorney	$58,816	Ongoing
78	Misc Cap - Construction	$24,171	Ongoing
79	Comp Plan 2020	$254,326	2021
80	Wellhead Protection Plan	$20,000	2023
81	Water Rights Analysis	$20,000	2021
82	Misc Geologist	$10,000	Alternating Years
83	Well 9 Wtr Qlty Rpt Phase 2	$18,908	2022
84	Well 9 Wtr Qlty Rpt Phase 3	$30,000	2022
85	Well 9 Wtr Qlty Rpt Phase 4	$30,000	2023
	TOTALS	$607,898	

Note:
1) Total Project Cost provided by the District.

8.9 Tanks/Reservoirs

A storage analysis of the District's water system was performed and is described in Chapter 4. Based on this analysis, there is an existing storage deficit in all three tanks, leading to a system-wide storage deficit of 1.38 MG. To resolve this issue and account for higher future demands, a new 3 MG tank (No. 79) will be constructed to boost pressures in the southwest portion of the District. This project was described in Section 8.7. Additional projects related to water supply and storage are described below and listed in Table 8-8.

8.9.1 Update VFD for 1300 Tank (No. 91)

Installing a third transfer pump at the reservoir site will keep the water level of Tanks 1100 and 1200 from dropping during large fire flow events; thereby maintaining the hydraulic grade line and providing adequate pressures to the system. The third transfer pump would allow the station to pump at the maximum fire flow rate of 3,000 gpm. The third transfer pump could be a fixed speed unit or a variable speed unit to match the existing transfer pumps. The existing duplex variable speed transfer pumps should remain in service as the lead and lag alternating pumps. The third pump should be brought online if the reservoir levels drop to a pre-determined set point indicating that the existing duplex transfer pumps cannot maintain the desired water levels in Tanks 100 and 1200.

8.9.2 New Water Tank T1400 (No. 79)

As described in Section 8.7.4, a new 3 MG tank will be constructed as part of the new 635 pressure zone (Zone 5). This tank will be supplied with water from Covington Water District.

Table 8-8
Tanks and Water Supply

CIP No.	Description	Total Project Cost[1]	Year
86	Pump + VFD for 1300 tank	$325,000	2024-2025
87	Tank & VFD controls	$50,000	2024-2025
88	Add railing on 2 mg tank	$20,000	2025
89	Miscellaneous Hydro studies	$30,000	
90	Backwash Valve Improvements 3,5,6,9	$330,000	2022, 2027
91	Upgrades to Well 3	$140,000	2023, 2027, 2031
92	Upgrades to Well 5	$80,000	2025, 2030
93	Upgrades to Well 6	$50,000	2029
94	Upgrades to Well 9	$150,000	2024, 2027, 2030
95	Well 6 Replacement Pre-Construction	$22,000	2022
96	Well 6 Replacement Construction	$1,700,000	2022-2024
97	1400 Reservoir Design & Construction	$11,927,800	2022-2026
98	Zone 5 PRV/BPS #1 & 2 Design & Construction	$5,251,400	2022-2026
99	Zone 5 Piping Modifications	$690,500	2022-2025
	TOTALS	$20,766,700	

Note:
1) Total Project Cost provided by the District

8.10 Summary

The District's recommended 10 Year Capital Improvements are listed in Table 8-9 and shown in Figure 8-1.

Table 8-9
10 Year CIP Summary

CIP No.	Project Location	Description	Total Project Cost	Length (ft)	Year
1	266th - 132nd to 134	Replace existing pipe with 12 in pipe to resolve deficiency	$404,250	660	2029
2	134th - 266th to 268	Replace existing pipe with 12 in pipe to resolve deficiency	$392,000	640	2029
3	SE 268th - 134 to 137th	Replace existing pipe with 12 in pipe to resolve deficiency	$490,000	800	2029
4	148th - 152nd to 268th	Replace existing pipe with 12 in pipe to resolve deficiency	$465,500	760	2027
5	Lk Meridian Park loop	Replace existing pipe with 12 in pipe to resolve deficiency	$336,875	550	2027
6	132 - 240th to 256	Replace existing pipe with 12 in pipe to resolve deficiency	$3,203,375	5,230	2027
7	132nd - 256th to 263rd	Replace existing pipe with 12 in pipe to resolve deficiency	$1,439,375	2,350	2027
8	132nd - 263rd to 270th	Replace existing pipe with 12 in pipe to resolve deficiency	$1,286,250	2,100	2027
9	132nd - 272nd to 278th	Replace existing pipe with 12 in pipe to resolve deficiency	$1,218,875	1,990	2027
10	SE 272 - 131st to 132nd	Replace existing pipe with 12 in pipe to resolve deficiency	$226,625	370	2027
11	138th Pl - 269 to end	Replace existing pipe with 8 in pipe to resolve deficiency	$609,000	1,160	2027
12	SE 266 - 134th to 138th Pl	Replace existing pipe with 8 in pipe to resolve deficiency	$477,750	910	2027
13	SE 267 - 138th Pl to end	Replace existing pipe with 8 in pipe to resolve deficiency	$168,000	320	2027
14	SE 268 -138th Pl to 137th	Replace existing pipe with 8 in pipe to resolve deficiency	$273,000	520	2027

Table 8-9
10 Year CIP Summary (Cont.)

CIP No.	Project Location	Description	Total Project Cost	Length (ft)	Year
15	135th - 266th to end	Replace existing pipe with 8 in pipe to resolve deficiency	$105,000	200	2027
16	SE 263rd - 144th to 148th	Replace existing pipe with 8 in pipe to resolve deficiency	$682,500	1,300	2029
17	148th - 263rd to 268th	Replace existing pipe with 8 in pipe to resolve deficiency	$677,250	1,290	2029
18	282nd 124 to 127th	Replace existing pipe with 8 in pipe to resolve deficiency	$525,000	1,000	2029
19	Alpine Vista/152/148th	Replace existing pipe with 8 in pipe to resolve deficiency	$630,000	1,200	2027
20	254th Intertie w/Covington	Construct a new intertie with Covington Water District	$630,000	1,200	2025
21	144th Ave SE - SE 282nd Pl to SE 279th St	Install new 12 in pipe to connect existing pipes	$535,920	870	2023
22	Throughout District	Miscellaneous AC Main Asset Replacement	$4,500,000	N/A	2026-2030
23	Throughout District	"Loop closures" from developers	$100,000	N/A	Ongoing
59	Throughout District	Telemetry Upgrades	$285,571	N/A	Ongoing
60	Throughout District	AC Pipe/Service line study	$30,000	N/A	Alternating years
61	District Office	Admin Building Improvements	$142,667	N/A	2021
62	District Office	Equipment Stor Bldg Improv	$50,000	N/A	2021
63	District Office	Admin Covered Meeting Room	$50,000	N/A	2021
64	District Office	Water Analyzer	$64,837	N/A	2020
65	Well 3 Site	Chlorine generation system Well 3	$20,000	N/A	2023
66	Well 5 Site	Chlorine generation system Well 5	$20,000	N/A	2024

Table 8-9
10 Year CIP Summary (Cont.)

CIP No.	Project Location	Description	Total Project Cost	Length (ft)	Year
67	Well 6 Site	Chlorine generation system Well 6	$30,000	N/A	2023
68	Well 9 Site	Chlorine generation system Well 9	$30,000	N/A	2024
69	Wells 6 and 9 Sites	Chlorine (Chemical Feed) Pump Project Wells 6&9*	$29,829	N/A	2020
70	N/A	GIS/Asset management project Phase 2	$80,000	N/A	2021
71	Northeast corner of the District	New 625 Zone 2	$1,872,000	N/A	2030
72	Area west of the tank site between SE 252nd Pl and SE 256th Pl	New 616 Zone 3	$1,796,000	N/A	2028
73	Northeast of SE 256th St & 152nd Ave SE	New 630 Zone 4	$850,000	N/A	2023
74	Southwest corner of the District, beginning at 132nd Ave SE & SE 288th St	New 640 Zone 5 and New 3 MG Tank	$17,900,000	N/A	2023-2026
75	N/A	CFC Rate study	$79,145	N/A	2021
76	N/A	Miscellaneous Cap - Engineering	$62,531	N/A	Ongoing
77	N/A	Miscellaneous Cap - Attorney	$58,816	N/A	Ongoing
78	Throughout District	Miscellaneous Cap- Construction	$24,171	N/A	Ongoing
79	N/A	Comp Plan 2020	$254,326	N/A	2021
80	Throughout District	Wellhead Protection Plan	$20,000	N/A	2023
81	N/A	Water Rights Analysis	$20,000	N/A	2021
82	Throughout District	Misc Geologist	$10,000	N/A	Alternating Years
83	Well 9 Site	Well 9 Wtr Qlty Rpt Phase 2	$18,908	N/A	2021
84	Well 9 Site	Well 9 Wtr Qlty Rpt Phase 3	$30,000	N/A	2022
85	Well 9 Site	Well 9 Wtr Qlty Rpt Phase 4	$30,000	N/A	2023

Table 8-9
10 Year CIP Summary (Cont.)

CIP No.	Project Location	Description	Total Project Cost	Length (ft)	Year
86	Existing Tank Site	Pump + VFD for 1300 tank	$342,442	N/A	2023
87	Existing Tank Site	Tank & VFD controls	$50,000	N/A	2023
88	Existing Tank Site	Add railing on 2 mg tank	$20,000	N/A	2024
89	Throughout District	Miscellaneous Hydro studies	$30,000	N/A	2022, 2029
90	Throughout District	Backwash Valve Improvements 3,5,6,9	$60,000	N/A	2021
91	Well 3 Site	Upgrades to Well 3	$166,649	N/A	2022, 2026
92	Well 5 Site	Upgrades to Well 5	$127,403	N/A	2024, 2029
93	Well 6 Site	Upgrades to Well 6	$86,284	N/A	2028
94	Well 9 Site	Upgrades to Well 9	$189,659	N/A	Alternating years
95	Well 6 Site	Well 6 Replacement Pre-Con	$180,000	N/A	2021
96	Well 6 Site	Well 6 Replacement Construction	$1,700,000	N/A	2021-2023
97	Throughout District	Seismic Mitigation Predesign	$113,000	N/A	2021
98	Throughout District	PRV/Booster Pump Station	$1,100,000	N/A	2021-2023
		TOTAL	$47,400,783		

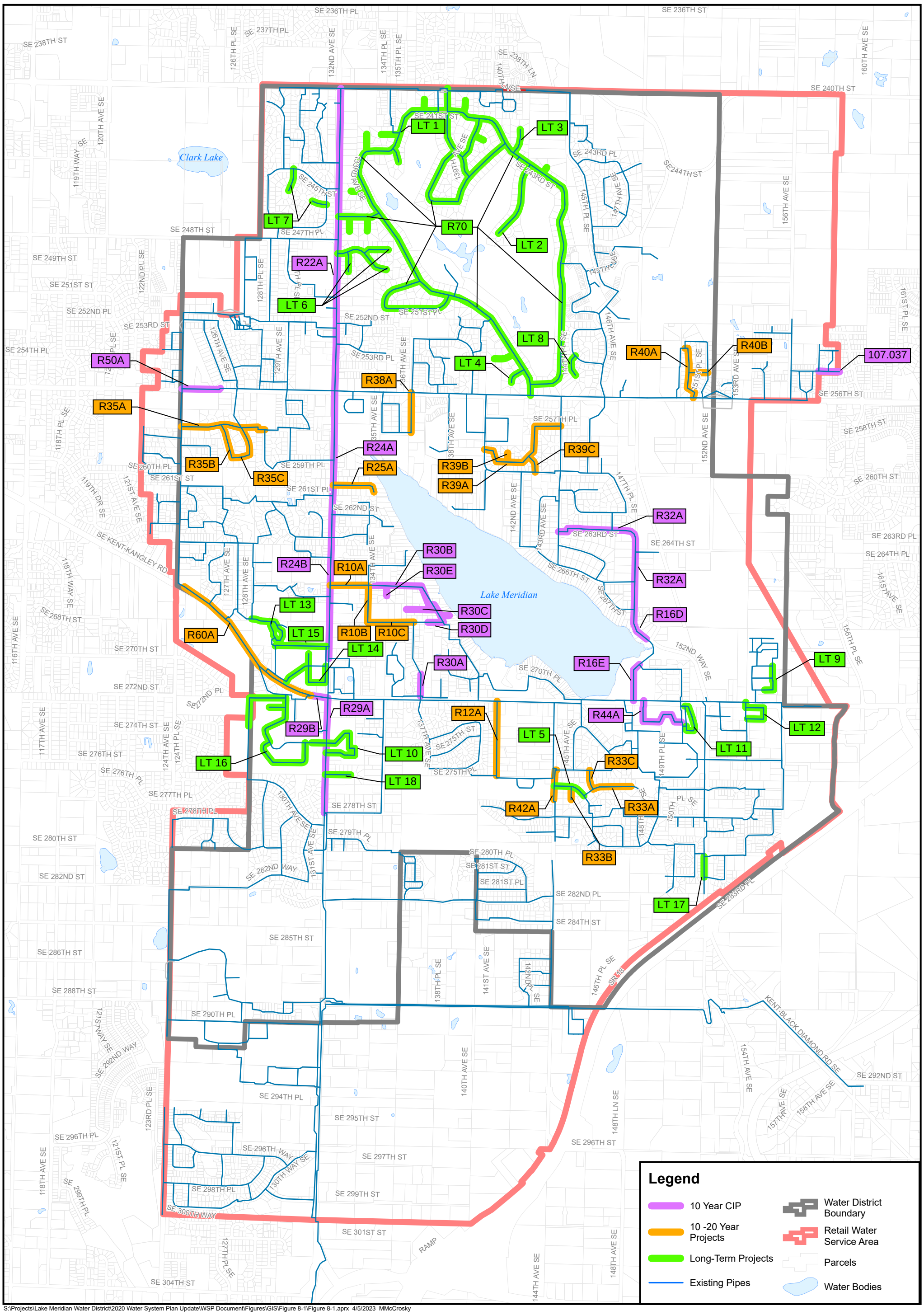

S:\Projects\Lake Meridian Water District\2020 Water System Plan Update\WSP Document\Figures\GIS\Figure 8-1\Figure 8-1.aprx 4/5/2023 MMcCrosky

King County GIS base data.
Data sources supplied may not reflect current or actual conditions. This map is a geographic representation based on available information. It does not represent survey data. No warranty is made concerning the accuracy, currency, or completeness of data depicted on this map.
BHC Consultants LLC., assumes no responsibility for the validity of any information presented herein, nor any responsibility for the use or misuse of the data.

0 750 1,500 Feet

N

Capital Improvement Projects - Water Main Replacement or Extension

2023 Water System Plan Update
Lake Meridian Water District
April 2023

Figure **8-1**

COPYRIGHT © 2021 BHC CONSULTANTS LLC. ALL RIGHTS RESERVED

THIS PAGE INTENTIONALLY BLANK.

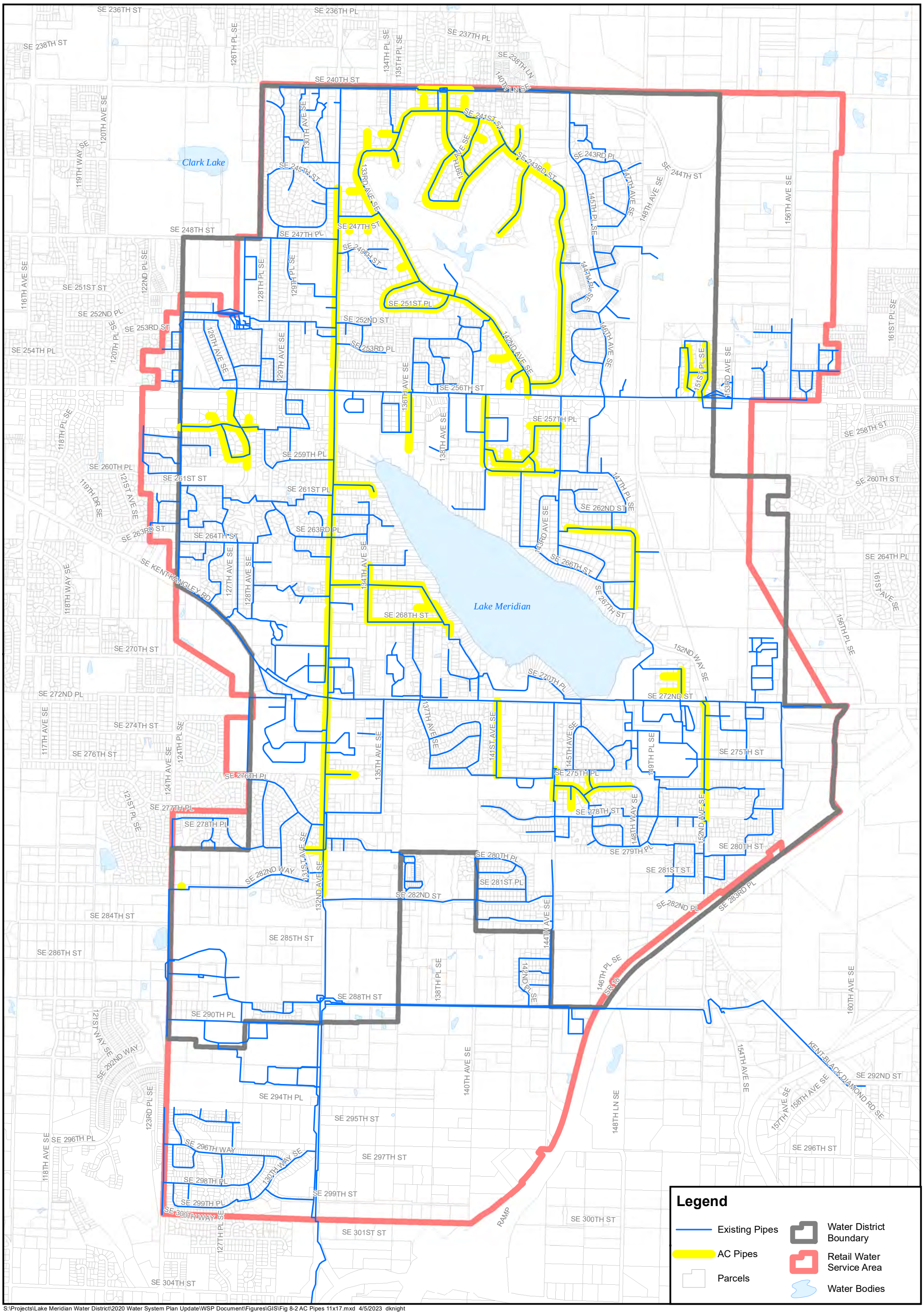

S:\Projects\Lake Meridian Water District\2020 Water System Plan Update\WSP Document\Figures\GIS\Fig 8-2 AC Pipes 11x17.mxd 4/5/2023 dknight

King County GIS base data.
Data sources supplied may not reflect current or actual conditions. This map is a geographic representation based on available information. It does not represent survey data. No warranty is made concerning the accuracy, currency, or completeness of data depicted on this map.
BHC Consultants LLC., assumes no responsibility for the validity of any information presented herein, nor any responsibility for the use or misuse of the data.

0 750 1,500 Feet

N

AC Material Pipes

2023 Water System Plan Update
Lake Meridian Water District
April 2023

Figure
8-2

COPYRIGHT © 2023 BHC CONSULTANTS LLC. ALL RIGHTS RESERVED

THIS PAGE INTENTIONALLY BLANK.

The total list of recommended improvement projects is broken down into three categories: 10 Year CIP, 20 Year Planning, and Long-Term Project. As shown in the following Table 8-10, these projects translate into a cumulative $61 million in capital expenditures projected for the 20-year planning period. There are 64 short-term (10-year) projects totaling $47.4 million. The remaining 37 projects are separated into 20 Year Planning Period projects (17 in total) and Long-Term Projects (20 in total). Long Term Projects are improvements which are not urgent but were identified in the water system model as deficiencies.

Table 8-10
System Improvement Plan

Project Type	Total Project Cost
10 Year CIP	$47,397,738
20 Year CIP	$19,775,000
Long Term Projects	$10,027,000

Note:
1) Basis for projected costs is January 2021.

THIS PAGE INTENTIONALLY BLANK.

Chapter 9 Financial Analysis

9.1 Introduction

The financial analysis assesses the Lake Meridian Water District's (District) ability to remain financially viable during the planning period, considering its recent historical performance as well as anticipated future needs. It also evaluates the affordability of the District's rates, both at existing levels and with any rate increases needed to support the planned capital program.

9.2 Financial History

Table 9-1 summarizes the District's financial performance for the 2016 – 2021 time period as documented in the District's financial statements (Statement of Revenues, Expenses, and Changes in Fund Net Position).

Table 9-1
Historical Financial Performance (2016 – 2021)

Operating Revenues ($000s)	2016	2017	2018	2019	2020	*2021 Est.*
Water Sales & Street Light Revenues	$3,789	$4,048	$4,156	$4,060	$4,434	$4,604
Penalties	41	42	44	68	18	30
Miscellaneous Revenue	26	93	286	293	298	113
Total Operating Revenues	$3,856	$4,183	$4,486	$4,421	$4,749	$4,747
Operating Expenses ($000s)						
Cash Operating Expenses	$2,713	$2,959	$3,388	$3,081	$3,601	$3,794
Depreciation & Amortization	1,284	1,317	1,348	1,362	1,309	1,309
Total Operating Expenses	$3,997	$4,276	$4,736	$4,443	$4,909	$5,103
Operating Income (Loss)	$(141)	$(93)	$(250)	$(22)	$(160)	$(356)
Non-Operating Rev./Exp. ($000s)						
Interest on Investments	$44	$50	$135	$214	$119	$80
Net Rental House Income	(37)	8	3	(2)	(2)	(2)
Debt Service Interest Expense	(95)	(109)	(97)	(87)	(77)	(68)
Gain/Loss on Disposition of Assets	42	2	(16)	(1)	229	-
Total Non-Operating Rev./Exp.	$(45)	$(48)	$25	$125	$269	$10
Income (Loss) Before Contributions	$(186)	$(141)	$(225)	$103	$109	$(346)
Capital Contributions	805	728	960	738	341	*(N/A)*[1]
Change in Net Assets	$619	$587	$735	$841	$450	*(N/A)*[1]
Total Net Assets – Jan. 1	$27,909	$28,528	$29,598	$29,631	$30,472	*(N/A)*[1]
Change in GASB 68	-	483	(701)	-	-	*(N/A)*[1]
Total Net Assets – Dec. 31	$28,528	$29,598	$29,631	$30,472	$30,922	*(N/A)*[1]
Operating Ratio (Excluding Depreciation)	1.42	1.41	1.32	1.43	1.32	1.25
Operating Ratio (Including Depreciation)	0.96	0.98	0.95	1.00	0.97	0.93
Current Ratio	8.88	9.27	8.19	8.80	9.80	*(N/A)*[1]
Days of Cash on Hand	964	884	722	760	744	*(N/A)*[1]
Outstanding Debt Principal ($000s)	4,233	3,662	3,193	2,715	2,323	1,919
Debt Service Coverage Ratio	3.98	4.22	5.61	6.99	5.04	*(N/A)*[1]

[1]Not available, as the District's 2021 Financial Statement had not been completed as of May 2022.

Key findings from Table 9-1 include:

- Despite the fact that the District increased its water rates by 25.4% from 2016 – 2021, its water sales revenue only increased by 21.5% during that period. This difference reflects the City of Kent's recent assumption of approximately 70 customers that had historically been served by the District. It is worth noting that with its predominantly residential customer base, the District has seen a short-term increase in billed revenue during the 2020 pandemic due to the number of people that have been working from home. This benefit has been offset to a degree by an increase in delinquencies attributable to the financial hardships caused by the pandemic.
- Cash operating expenses (excluding depreciation & amortization) increased by 39.8% from 2016 – 2021, or approximately 6.9% per year. This increase is at least partially attributable to the District's salary and benefit costs increasing at a rate above inflation. Including depreciation & amortization, the District's cash operating expenses increased by 27.7% over the past six years.
- The operating ratio provides a means of evaluating the District's self-sufficiency as an enterprise, measuring the ability of annual operating revenues to cover annual operating costs. A ratio of 1.0 indicates that the District is collecting exactly enough revenue to pay for its operating costs; based purely on cash operating expenses, the District's operating ratio has varied from 1.25 to 1.43 over the past six years. Including depreciation expense in this calculation provides insight as to whether the District is charging customers enough to fund the replacement of assets in addition to daily operating costs – the District's operating ratio including depreciation has varied from 0.93 to 1.00 over the past six years. Table 9-1 indicates that the District was able to cover cash operating expenses for the entire six-year period but has been unable to fully fund depreciation expense during that time with the exception of 2019.
- The current ratio is a measure of short-term liquidity or the District's ability to pay its current bills – it is calculated by dividing unrestricted current assets (excluding inventories and prepaid items) by current liabilities. A ratio of 1.0 indicates that the utility has exactly enough to pay its bills; higher values are desirable as they suggest an ability to pay large or unanticipated bills. The District has attained current ratios varying from 8.19 to 9.80 over the past six years, suggesting that the District has ample capacity to meet its short-term financial obligations.
- Days of cash on hand is a measure of financial security, quantifying how long the District would be able to fund daily operating and maintenance costs if it received no additional revenue. It is calculated by dividing unrestricted cash by the average daily cost of operations (excluding depreciation). While there is no minimum standard for this metric, bond rating agencies have recently expressed a preference for a minimum of 180 days of cash on hand for utilities seeking the highest bond ratings. Due in part to its policy to generate at least $350,000 per year through rates for capital funding, the District has been able to maintain 722 – 964 days of cash on hand over the past six years.
- Despite taking on more debt in 2016 to purchase supply capacity from Covington Water District, the District has cut its outstanding debt principal balance by approximately $830,000 over the past six years. It has primarily funded capital projects through cash resources including capital facilities charges (CFC) and rates (balances in the Operating Fund and Construction Fund). The District had a combined balance of $3.8 million outstanding as of year-end 2020.

- The debt service coverage ratio, which provides a basis for evaluating financial performance in the context of the District's debt covenants, varied between 3.98 and 6.99 during the 2016 – 2021 period. The District's bond covenants require that the District maintain a minimum ratio of 1.20 times annual revenue bond debt service.

9.3 Capital Funding Resources

Other than cash financing, the District may fund the water Capital Improvement Program (CIP) from a variety of sources, described in further detail below.

9.3.1 Government Programs

Federal and state grant programs were historically available to local utilities for capital funding assistance. However, these assistance programs have been mostly eliminated, substantially reduced in scope and amount, or replaced by loan programs. Remaining grant programs are generally lightly funded and heavily subscribed. Nonetheless, even the benefit of low-interest loans makes the effort of applying worthwhile. Appendix U provides a summary of these programs prepared by the Washington State Department of Commerce.

9.3.2 Debt Financing

Revenue Bonds

Revenue bonds provide a means of funding capital improvements that exceed a utility's financial resources. They are secured only by utility revenues, while other bonds (e.g., general obligation bonds) can have additional security in the form of a pledge of tax revenues or other resources. With this limited commitment, revenue bonds normally bear higher interest rates than other types of debt and also require additional security conditions intended to protect bondholders from default risk. These conditions may include the maintenance of dedicated reserves and minimum standards of financial performance (e.g., bond debt service coverage).

Revenue bonds can be issued in Washington State without a public vote. While there is no explicit statutory bonding limit, the conditions that come with revenue bonds often impose practical limits on a utility's level of indebtedness. An excessive debt burden may reduce a utility's flexibility to phase in rate increases, also resulting in a higher overall cost of capital investment given the related interest payments. It is worth noting that bond rating agencies also consider a utility's debt service coverage when assigning a rating – higher levels of indebtedness make it more difficult for a utility to meet the coverage ratios that the rating agencies require for the highest ratings (and the lowest interest rates). In recent years, these coverage ratios have often exceeded the minimum legal standards outlined in the applicable bond covenants.

Connection Charges

The District imposes a CFC of $8,797 per equivalent residential unit (ERU) on new development as a condition of connecting to its water system. This charge is a "connection charge" authorized by RCW 57.08.005 as a means of recovering an equitable share of the cost of utility infrastructure from growth. The CFC promotes equity between new and existing customers, also providing a source of cash funding for the District's capital needs and related debt repayment.

9.4 Current Revenue

The primary goal of the financial analysis is to develop a multi-year rate strategy that generates enough revenue to cover the District's operating and capital costs. This study focuses on defining the amount of revenue needed to meet the system's financial obligations including:

- Operation and maintenance costs
- Administrative and overhead costs
- Policy-based needs (e.g., reserve funding)
- Capital costs
- Existing/new debt service obligations

As the District operates as an enterprise, it relies on revenue from its water rates (as opposed to taxes or other external resources) to cover the expenses outlined above. The financial analysis examines the District's ability to fund its CIP and other financial needs while maintaining affordable water rates. It is a comprehensive analysis that includes both operating and capital elements:

- The revenue requirement analysis determines the amount of revenue necessary to fund the ongoing operation, maintenance, and administration of the utility on an annual basis, focusing specifically on the needs funded from operating revenues. It includes a framework of fiscal policies intended to promote long-term financial stability and viability.
- The capital funding plan develops a funding strategy for the CIP that considers rate revenues, existing reserves, capital facilities charges, debt financing, and any other anticipated resources (e.g., grants, developer contributions, etc.). It can impact the revenue requirement analysis through the use of debt financing (resulting in annual debt service) and capital funding embedded in rates.

9.4.1 Financial Policies

The ensuing discussion summarizes the key financial policies used in this analysis.

Utility Reserves

Reserves are a key component of any utility financial strategy, as they provide the flexibility to manage variations in costs and revenues that could otherwise have an adverse impact on ratepayers. For the purpose of this analysis, resources are separated into the following funds:

- Operating Fund: This fund provides an unrestricted fund balance to accommodate the short-term cycles of revenues and expenses. These reserves are intended to address variations in revenues and expenses, whether anticipated (e.g., billing/receipt cycles, payroll cycles) or unanticipated (e.g. weather, economic conditions). The District maintains a balance equal to 75 – 90 days of operating expenses in this fund. The target range is approximately $857,000 – $1.0 million for 2022. Any surplus may be transferred to other funds to help address other financial needs (e.g., capital program).
- Construction Fund: This fund provides a source of cash for unanticipated capital expenditures such as emergency asset replacements or capital project overruns. In the context of the longer-term financial analysis, it also enforces an appropriate segregation of resources restricted (or otherwise designated) for capital purposes including ongoing infrastructure renewal and replacement. This

analysis assumes a minimum balance equal to 1% of the cost of system assets, which is approximately $583,000 in 2022.

- Debt Reserve: The District's bond covenants establish reserve requirements as a means of protecting bondholders against the risk of nonpayment. These reserves are typically funded at the time of borrowing as part of the debt principal. The District currently has a minimum Bond Reserve that is equal to the maximum annual debt service payment on its two outstanding revenue bonds. This equates to approximately $293,000 in 2022 and drops down to approximately $94,000 in 2023 when the 2011 Bonds are paid off. This reserve may increase with the issuance of new debt.
- This analysis also targets a combined balance of 180 days of operating expenses in the Operating and Construction Funds or slightly over $2.0 million. Though not a formal requirement, this policy is based on recommendations from the bond rating agencies for borrowers seeking the highest bond ratings. The forecast projects that the District will end 2022 with a combined balance of roughly $7.4 million, which is well over the target balance.

System Reinvestment

System reinvestment funding policies generate cash through rates above operating expenses and debt service to provide a source of funding for capital needs. There are a variety of potential benchmarks for annual system reinvestment, including:

- Reported depreciation expense, generally based on the original cost of assets
- Estimated replacement-cost depreciation expense, which recognizes that replacing infrastructure in the future will likely cost more than the original installation costs
- Annual contributions based on anticipated replacement needs, as defined in an asset management plan

The District could choose any of these benchmarks or set any other funding level as a matter of policy. Higher system reinvestment funding levels will have a greater upfront impact on existing ratepayers but will reduce future debt issuance and result in lower costs in the long-term. Balancing these considerations, this analysis assumes that the District increases system reinvestment gradually over time. The current transfer of $350,000 per year represents approximately 25% of depreciation expense; the financial forecast shows the District increasing system reinvestment to $844,000 (40% of depreciation) by 2031.

Financial Performance Standards

The revenue requirement analysis uses a pair of sufficiency tests to establish the amount of revenue needed to meet the District's financial obligations on an annual basis.

- Cash Flow Test: To satisfy this test, operating revenues must be adequate to fund all known cash requirements including Operation and Maintenance (O&M) expenses, debt service, system reinvestment funding (and other rate-funded capital outlays), and reserve funding.
- Coverage Test: Intended to ensure compliance with the District's bond covenants, which require that the District's net revenue is greater than or equal to 1.20 times annual parity debt service.

The annual revenue requirement is broadly defined as the amount of revenue needed to satisfy both of these tests. Short-term cash flow deficits may occur as part of a strategy to phase rate increases in, as long as the utility has sufficient reserves on hand to absorb them. The financial analysis assumes that the debt service coverage requirement must always be met.

Capital Funding Plan

As shown below in Table 9-2, the ten-year CIP includes $31.5 million in expenditures from 2022 through 2031 (2022 dollars). Adjusting for inflation at a rate of 3.0% per year, the total projected 2022 – 2031 capital expenditures increase to $35.1 million. These expenditures are expected to be relatively frontloaded, with $23.8 million occurring within the next five years.

Table 9-2 indicates that the District's cash resources (including existing cash balances, interest earnings, rate-funded system reinvestment, and capital facilities charges) will not be adequate to cover the projected capital costs. The capital funding strategy includes $1.7 million in PWTF loan funding for Well 6 as well as $17.5 million in bond proceeds to fund the District's larger projects – $11.8 million in 2024 and $5.7 million in 2029. This analysis assumes that the District issues 20-year bonds at an interest rate of 4.0% – factoring in estimated issuance costs and reserve requirements, the District will need to issue almost $19.1 million in bonds to generate the $17.5 million in net proceeds needed to fund the CIP. This new debt is expected to increase the District's annual debt service by about $825,000 in 2024, and an additional $398,000 in 2029.

9.4.2 Revenue Requirement

The revenue requirement analysis evaluates the District's ability to cover its projected costs under its currently adopted rates. In the event of any projected deficiencies, this analysis will serve as the basis for a strategy of recommended rate adjustments.

Projected Financial Performance

The revenue requirement analysis is developed from the District's Preliminary 2022 Budget along with other assumptions. Some of the key assumptions include:

- The forecast of rate revenue is based on 2019 customer billing data provided by the District, adjusted for customer growth at a rate of approximately 0.47% (40 equivalent residential units) per year based on input from District staff.
- The operating forecast generally holds most of the District's non-rate revenues at the budgeted 2022 levels moving forward, with the following exceptions:
  - Interest earnings are calculated on the District's projected fund balances, assuming an interest earnings rate of 0.50% from 2022 – 2024, 0.75% in 2025, 1.00% in 2026 and 1.25% for the remainder of the forecast.
  - Street light revenues are set to equal the corresponding expense that the District incurs to provide street light service.
  - Miscellaneous retail/service revenues are adjusted for customer growth.

Table 9-2
Capital Improvement Program ($000s)

	2022	2023	2024	2025	2026	2027	2028	2029	2030	2031	Total
Projected Capital Expenditures											
Interlocal Agreements & Interties	$5	$5	$5	$5	$5	$5	$5	$5	$5	$5	$45
Miscellaneous Capital Studies	10	10	10	15	40	10	10	10	10	10	$135
Tanks / Reservoirs	-	-	55	340	-	-	-	-	-	-	$395
Future Supply (Water Supply Facilities)	1,550	2,533	6,560	6,822	2,298	390	-	50	115	40	$20,357
Existing Main/Service Line – Repl. Program	-	-	-	50	173	-	-	2,248	-	4,888	$7,359
Main Extensions - New	60	610	10	10	10	10	210	210	210	210	$1,550
Misc. Capital Projects, Admin bldg., etc.	230	175	30	10	45	10	25	40	25	10	$600
Misc. Capital Payments/ Purchases	110	90	130	70	130	70	130	90	150	10	$980
Oversizing	4	4	4	4	4	4	4	4	4	4	$35
Total (2022 Dollars)	$1,968	$3,426	$6,803	$7,325	$2,704	$498	$383	$2,656	$518	$5,176	$31,456
Plus: Adjustment for Inflation	-	103	414	679	339	63	61	515	119	1,381	$3,674
Total Projected Expenditures	$1,968	$3,528	$7,217	$8,004	$3,044	$561	$444	$3,171	$637	$6,557	$35,131
Construction Fund Projections											
Beginning Balance	$2,745	$6,414	$4,797	$10,797	$3,493	$1,245	$1,735	$2,530	$6,165	$6,689	$2,745
Plus: Interest Earnings	14	32	24	81	35	16	22	32	77	84	415
Plus: Capital Facilities Charges	352	352	352	352	352	352	352	352	352	352	3,519
Plus: Rate-Funded System Reinvestment	350	350	242	267	408	411	698	723	732	844	5,025
Plus: Transfers from Operating Fund	4,712	528	-	-	-	273	167	-	-	-	5,679
Plus: PWTF Loan Proceeds (Well 6)	209	650	800	-	-	-	-	-	-	-	1,659
Plus: Revenue Bond Proceeds	-	-	11,800	-	-	-	-	5,700	-	-	17,500
Less: Capital Expenditures	(1,968)	(3,528)	(7,217)	(8,004)	(3,044)	(561)	(444)	(3,171)	(637)	(6,557)	(35,131)
Ending Balance	$6,414	$4,797	$10,797	$3,493	$1,245	$1,735	$2,530	$6,165	$6,689	$1,412	$1,412
Minimum Balance	*$583*	*$611*	*$676*	*$749*	*$777*	*$781*	*$785*	*$814*	*$819*	*$877*	

THIS PAGE INTENTIONALLY BLANK.

- The forecast of operating expenses generally adjusts the budgeted 2022 expenditures for inflation as follows:
  - General Cost Inflation: 3.0% per year
  - Construction Cost Inflation: 3.0% per year
  - Salaries/Wages: 4.0% per year
  - Employee Benefits: 4.0% per year
  - Water Supply Costs: 3.47 – 3.49% per year (general inflation + growth)

  These escalators are based on input received from District staff, considering historical escalation of the Consumer Price Index for the Seattle area, the Engineering News Record (ENR) Construction Cost Index, and increases in District labor costs.
- Taxes are calculated based on the projected revenues and prevailing rates:
  - State Excise Tax (Water Distribution): 5.029%.
  - Business & Occupation (B&O) Tax: 1.5% (the District is projected to have less than $1 million per year of revenue subject to the B&O tax, so the workforce education surcharge of 0.25% does not apply).
  - City of Kent Franchise Fee: 6.3% (applies only to the portion of rate revenue from customers located within the City of Kent).
- The District's debt schedules indicate a total payment of $434,000 in 2021; the annual payment for the 2010 and 2011 revenue bonds decreases over time as the District pays off its outstanding debt. In 2024, the loan for the construction of Well 6 will begin, and the debt payments will increase by approximately $100,000.

Table 9-3 summarizes the District's projected financial performance and rate revenue requirements based upon the above assumptions.

Table 9-3 indicates that while the District's existing rates are adequate to cover operating expenses and debt repayment obligations for 2022, rate increases will be needed for the following reasons:

- Keeping up with increasing operating costs. Based on the assumed inflation rates noted above, the District's operating expenses are projected to increase by 3.0 – 4.0% per year while rate revenue (at existing rates) increases by only 0.5% per year.
- Covering new debt service. Beginning in 2022, the District will begin making principal and interest payments of roughly $12,000 per year on the Well 6 pre-construction loan. In 2024, the District is projected to begin making payments averaging $107,000 per year on the Well 6 construction loan and payments of approximately $825,000 on the anticipated revenue bond shown in Table 9-2. The rate strategy shown in Table 9-3 envisions phasing the increase in over a five-year period.
- Expanding system reinvestment to fund longer-term needs. Table 9-3 shows the District increasing its system reinvestment beginning in 2026, once the initial rate increase has been phased in. The increases in subsequent years intend to continue progress toward funding system reinvestment based on annual depreciation expense.

Under the phasing strategy shown in Table 9-3, the District is projected to draw its Operating Fund balance down to a minimum of approximately $899,000 (75 days of operating expenses) in 2024. The forecast shows the District remaining within the target range of 75 – 90 days of operating expenses through 2031. Beyond 2031, the forecast envisions rate increases of 4.0% per year to continue progressing toward system reinvestment based on annual depreciation expense.

It is important to note that these financial projections are based upon current assumptions and the current capital program. Circumstances might change over time, causing actual rate adjustments to be higher or lower once actual costs are known. It would be prudent for the District to monitor its financial status regularly, revisiting the analysis periodically or in the event of significant changes to the assumptions outlined above.

9.4.3 Current and Projected Rates

The District's current water rate structure consists of a fixed charge based on water meter size, an inclining-block volume rate for single-family customers, and a seasonal volume rate structure for other customers. This structure is consistent with the Washington State Department of Health's recommendations in Section 9.6.2 of the Water System Planning Guidebook – supporting water use efficiency (conservation rates).

Table 9-4 and Table 9-5 present a forecast of the District's water rates (for residential and non-residential customers, respectively), applying the rate adjustments shown in Table 9-3 uniformly to the District's existing charges.

Affordability

The District's customer assistance program currently includes the following elements:

- There is an informational flyer available on the District's website that provides contact information for local agencies that offer assistance to residents in need.
- Customers that purchase and install water-efficient washing machines can request a $50 rebate from the District.
- Customers that are struggling to pay their water bills as a result of the COVID-19 pandemic can apply for a six-month payment plan to repay their outstanding balances.

The Washington State Department of Health and the Public Works Board have historically used an affordability index to prioritize low-cost loan awards. The typical threshold looks at whether a system's rates exceed 2.5% of median household income (MHI) for the demographic area – if monthly bills are below this level, they are generally considered affordable. Since 90% of the District's customers are within Kent's city limits, the affordability analysis includes the 6.3% franchise fee imposed by the City of Kent.

U.S. Census Bureau data indicates that the MHI in the City of Kent was $73,891 in 2020 dollars. Table 9-6 summarizes the affordability evaluation of the District's rates for the ten-year planning period, using the 2020 estimate of MHI as a conservatively low representation of MHI.

Table 9-3
Projected Financial Performance & Revenue Requirements ($000s)

	2022	2023	2024	2025	2026	2027	2028	2029	2030	2031
Revenue										
Rate Revenue at 2022 Rates	$4,600	$4,652	$4,674	$4,696	$4,718	$4,740	$4,762	$4,784	$4,806	$4,827
Other Operating Revenues	479	434	435	459	477	497	500	503	512	514
Total Revenues	$5,079	$5,086	$5,110	$5,155	$5,195	$5,237	$5,262	$5,287	$5,318	$5,342
Expenses										
Cash Operating Expenses	$4,174	$4,220	$4,368	$4,495	$4,653	$4,788	$4,957	$5,102	$5,284	$5,440
Debt Service	435	226	1,158	1,159	1,094	1,096	1,093	1,493	1,489	1,396
System Reinvestment	350	350	242	267	408	411	698	723	732	844
Total Expenses	$4,959	$4,796	$5,768	$5,921	$6,155	$6,295	$6,748	$7,318	$7,505	$7,680
Net Operating Cash Flow	$120	$290	$(658)	$(766)	$(960)	$(1,058)	$(1,485)	$(2,031)	$(2,187)	$(2,338)
Annual Rate Adjustment	*5.00%*	*6.00%*	*6.00%*	*6.00%*	*6.00%*	*6.00%*	*4.50%*	*4.00%*	*4.00%*	*4.00%*
After Rate Increases										
Rate Revenues	$4,600	$4,932	$5,252	$5,593	$5,956	$6,343	$6,659	$6,957	$7,269	$7,594
Net Operating Cash Flow	$120	$539	$(142)	$35	$146	$374	$209	$(90)	$13	$132
Debt Service Coverage	4.33	17.73	1.80	2.08	2.23	2.45	2.59	1.90	2.02	2.30
Projected Ending Balances										
Operating Fund	$1,029	$1,041	$899	$934	$1,079	$1,181	$1,223	$1,133	$1,146	$1,278
Construction Fund	6,414	4,797	10,797	3,493	1,245	1,735	2,530	6,165	6,689	1,412
Total	$7,443	$5,838	$11,696	$4,427	$2,324	$2,916	$3,753	$7,298	$7,835	$2,690
Target (180 Days of O&M)	*$2,058*	*$2,081*	*$2,154*	*$2,216*	*$2,294*	*$2,361*	*$2,445*	*$2,516*	*$2,606*	*$2,683*

Table 9-4
Residential Water Rate Forecast (Excluding Kent Franchise Fee)

	Adopted	Proposed	*Projected*							
	2022	2023	2024	2025	2026	2027	2028	2029	2030	2031
Bimonthly Meter Charges										
5/8"	$41.08	$43.54	$46.15	$48.92	$51.86	$54.97	$57.44	$59.74	$62.13	$64.62
3/4" *	$58.40	$61.90	$65.61	$69.55	$73.72	$78.14	$81.66	$84.93	$88.33	$91.86
1"	$93.85	$99.48	$105.45	$111.78	$118.49	$125.60	$131.25	$136.50	$141.96	$147.64
1-1/2"	$179.52	$190.29	$201.71	$213.81	$226.64	$240.24	$251.05	$261.09	$271.53	$282.39
2"	$287.42	$304.67	$322.95	$342.33	$362.87	$384.64	$401.95	$418.03	$434.75	$452.14
Consumption Rate per ccf										
0 – 12 ccf	$3.34	$3.54	$3.75	$3.98	$4.22	$4.47	$4.67	$4.86	$5.05	$5.25
13 – 19 ccf	$4.99	$5.29	$5.61	$5.95	$6.31	$6.69	$6.99	$7.27	$7.56	$7.86
20 – 28 ccf	$6.68	$7.08	$7.50	$7.95	$8.43	$8.94	$9.34	$9.71	$10.10	$10.50
29+ ccf	$8.25	$8.75	$9.28	$9.84	$10.43	$11.06	$11.56	$12.02	$12.50	$13.00

* 3/4" Low Pressure customers are charged as a 5/8" meter

Table 9-5
Non-Residential Water Rate Forecast *(Excluding Kent Franchise Fee)*

	Adopted	Proposed	*Projected*							
	2022	2023	2024	2025	2026	2027	2028	2029	2030	2031
Bimonthly Meter Charges										
5/8"	$45.60	$48.34	$51.24	$54.31	$57.57	$61.02	$63.77	$66.32	$68.97	$71.73
3/4" *	$64.80	$68.69	$72.81	$77.18	$81.81	$86.72	$90.62	$94.24	$98.01	$101.93
1"	$104.11	$110.36	$116.98	$124.00	$131.44	$139.33	$145.60	$151.42	$157.48	$163.78
1-1/2"	$199.23	$211.18	$223.85	$237.28	$251.52	$266.61	$278.61	$289.75	$301.34	$313.39
2"	$318.94	$338.08	$358.36	$379.86	$402.65	$426.81	$446.02	$463.86	$482.41	$501.71
3"	$684.62	$725.70	$769.24	$815.39	$864.31	$916.17	$957.40	$995.70	$1,035.53	$1,076.95
4"	$1,041.04	$1,103.50	$1,169.71	$1,239.89	$1,314.28	$1,393.14	$1,455.83	$1,514.06	$1,574.62	$1,637.60
6"	$2,019.16	$2,140.31	$2,268.73	$2,404.85	$2,549.14	$2,702.09	$2,823.68	$2,936.63	$3,054.10	$3,176.26
8"	$3,189.30	$3,380.66	$3,583.50	$3,798.51	$4,026.42	$4,268.01	$4,460.07	$4,638.47	$4,824.01	$5,016.97
Consumption Rate per ccf										
Commercial & Multi-Family										
Winter (Nov – Jun)	$4.63	$4.91	$5.20	$5.51	$5.84	$6.19	$6.47	$6.73	$7.00	$7.28
Summer (Jul – Oct)	$6.29	$6.67	$7.07	$7.49	$7.94	$8.42	$8.80	$9.15	$9.52	$9.90
Irrigation										
Winter (Nov – Jun)	$6.91	$7.32	$7.76	$8.23	$8.72	$9.24	$9.66	$10.05	$10.45	$10.87
Summer (Jul – Oct)	$9.18	$9.73	$10.31	$10.93	$11.59	$12.29	$12.84	$13.35	$13.88	$14.44

Table 9-6
Affordability Evaluation

	2022	2023	2024	2025	2026	2027	2028	2029	2030	2031
Bimonthly Single-Family Bill @ 14 ccf[1]	$96.88	$102.69	$108.82	$115.42	$122.37	$129.68	$135.49	$140.95	$146.53	$152.37
Median Household Income	$73,891	$73,891	$73,891	$73,891	$73,891	$73,891	$73,891	$73,891	$73,891	$73,891
Annual Single-Family Bill as a % of MHI	0.79%	0.83%	0.88%	0.94%	0.99%	1.05%	1.10%	1.14%	1.19%	1.24%

[1]5/8" meter, includes Kent's franchise fee (6.3%).

Table 9-6 suggests that even with the conservative assumption that MHI will not increase over the next ten years, the District's rates are and will remain within the affordability index threshold of 2.5% of median household income during that period.

Conclusion

The revenue requirement analysis indicates that the District needs to increase its water rates in order to keep up with operating costs, cover debt service payments on debt issued to fund the capital plan and generate cash funding for system reinvestment. The recommended rate strategy envisions annual rate increases of 6.00% through 2027, followed by a rate increase of 4.50% in 2028 and annual rate increases of 4.00% from 2029 – 2031. Even with these increases, the average residential bill is expected to remain within the affordability index threshold of 2.5% of median household income.

It would be prudent for the District to regularly monitor its financial position, revisiting the key underlying assumptions to ensure that the utility's revenues remain sufficient to meet its financial obligations.

THIS PAGE INTENTIONALLY BLANK.

Appendix A

SEPA Checklist and DNS

THIS PAGE INTENTIONALLY BLANK.

SEPA ENVIRONMENTAL CHECKLIST

Purpose of checklist:

Governmental agencies use this checklist to help determine whether the environmental impacts of your proposal are significant. This information is also helpful to determine if available avoidance, minimization or compensatory mitigation measures will address the probable significant impacts or if an environmental impact statement will be prepared to further analyze the proposal.

Instructions for applicants:

This environmental checklist asks you to describe some basic information about your proposal. Please answer each question accurately and carefully, to the best of your knowledge. You may need to consult with an agency specialist or private consultant for some questions. You may use "not applicable" or "does not apply" only when you can explain why it does not apply and not when the answer is unknown. You may also attach or incorporate by reference additional studies reports. Complete and accurate answers to these questions often avoid delays with the SEPA process as well as later in the decision-making process.

The checklist questions apply to all parts of your proposal, even if you plan to do them over a period of time or on different parcels of land. Attach any additional information that will help describe your proposal or its environmental effects. The agency to which you submit this checklist may ask you to explain your answers or provide additional information reasonably related to determining if there may be significant adverse impact.

Instructions for Lead Agencies:

Please adjust the format of this template as needed. Additional information may be necessary to evaluate the existing environment, all interrelated aspects of the proposal and an analysis of adverse impacts. The checklist is considered the first but not necessarily the only source of information needed to make an adequate threshold determination. Once a threshold determination is made, the lead agency is responsible for the completeness and accuracy of the checklist and other supporting documents.

Use of checklist for nonproject proposals:

For nonproject proposals (such as ordinances, regulations, plans and programs), complete the applicable parts of sections A and B plus the SUPPLEMENTAL SHEET FOR NONPROJECT ACTIONS (part D). Please completely answer all questions that apply and note that the words "project," "applicant," and "property or site" should be read as "proposal," "proponent," and "affected geographic area," respectively. The lead agency may exclude (for non-projects) questions in Part B - Environmental Elements –that do not contribute meaningfully to the analysis of the proposal.

A. Background

1. Name of proposed project, if applicable:

LAKE MERIDIAN WATER DISTRICT, 2023 WATER COMPREHENSIVE PLAN

2. Name of applicant:

LAKE MERIDIAN WATER DISTRICT

3. Address and phone number of applicant and contact person:

27224 144TH AVE SE
KENT, WA 98042
(253) 631-3770
CHRIS HALL, DISTRICT MANAGER

4. Date checklist prepared:

JUNE 2, 2021

5. Agency requesting checklist:

METROPOLITAN KING COUNTY COUNCIL
KING COUNTY COURTHOUSE
516 3RD AVENUE, ROOM 1200
SEATTLE, WA 98104-2312

WASHINGTON STATE DEPT. OF ECOLOGY
ENVIRONMENTAL REVIEW
PO BOX 47703
OLYMPIA WA 98504-7703

WASHINGTON STATE DEPARTMENT OF HEALTH
DIVISION OF DRINKING WATER
NORTHWEST REGIONAL OFFICE
20434 72ND AVE. SO., SUITE 200, K17-12
KENT, WA 98032

PUBLIC HEALTH - SEATTLE AND KING COUNTY
14350 SE EASTGATE WAY
BELLEVUE, WA 98007

CITY OF KENT
DEVELOPMENT SERVICES
220 4TH AVENUE SOUTH
KENT, WA 98032
CITY OF COVINGTON
16720 SE 271ST ST, #100
COVINGTON, WA 98042-7342

CITY OF AUBURN
25W. MAIN
AUBURN, WA 98002
SOOS CREEK WATER & SEWER DISTRICT

PO BOX 58039
14616 SE 192ND STREET
RENTON, WA 98058

COVINGTON WATER DISTRICT
18631 SE 300TH PLACE
KENT, WA 98042

MUCKLESHOOT INDIAN TRIBE
39015 172ND AVENUE SE
AUBURN, WA 98092
ATTN: FISHERIES DEPARTMENT

6. Proposed timing or schedule (including phasing, if applicable):

THE 2023 WATER COMPREHENSIVE PLAN IS EXPECTED TO BE ADOPTED IN 2023.

7. Do you have any plans for future additions, expansion, or further activity related to or connected with this proposal? If yes, explain.

THE WATER SYSTEM PLAN DISCUSSES ADDITIONS AND IMPROVEMENTS TO THE SYSTEM. HIGH PRIORITY IMPROVEMENTS WILL PROBABLY OCCUR WITHIN 5 YEARS, LOWER TO INTERMEDIATE IMPROVEMENTS MAY OR MAY NOT OCCUR WITHIN TEN TO TWENTY YEARS DEPENDING ON SYSTEM DEMAND. FUTURE ADJUSTMENTS IN THE WATER SERVICE AREA WILL BE REVIEWED AS THEY OCCUR.

8. List any environmental information you know about that has been prepared, or will be prepared, directly related to this proposal.

THE PROJECTS PROPOSED IN THE PLAN MAY REQUIRE THEIR OWN EVIRONMENTAL EVALUATION, DEPENDING UPON THE SCOPE OF THE PROJECT.

9. Do you know whether applications are pending for governmental approvals of other proposals directly affecting the property covered by your proposal? If yes, explain.

NONE KNOWN.

10. List any government approvals or permits that will be needed for your proposal, if known.

THE PROJECTS OUTLINED IN THE 2023 COMPREHENSIVE PLAN WILL, GENERALLY, REQUIRE APPROVAL FROM THE FOLLOWING AGENCIES:

WASHINGTON STATE DEPARTMENT OF HEALTH (DOH)
WASHINGTON STATE DEPARTMENT OF ECOLOGY (DOE)
SEATTLE-KING COUNTY DEPARTMENT OF HEALTH
METROPOLITAN KING COUNTY COUNCIL
KING COUNTY DEPARTMENT OF DEVELOPMENT AND ENVIRONMENTAL SERVICES
CITY OF KENT
CITY OF COVINGTON
CITY OF AUBURN
SOOS CREEK WATER & SEWER DISTRICT
COVINGTON WATER DISTRICT
MUCKELSHOOT INDIAN TRIBE

11. Give brief, complete description of your proposal, including the proposed uses and the size of the project and site. There are several questions later in this checklist that ask you to describe certain aspects of your proposal. You do not need to repeat those answers on this page. (Lead agencies may modify this form to include additional specific information on project description.)

LAKE MERIDIAN WATER DISTRICT HAS PREPARED THIS WATER COMPREHENSIVE PLAN TO OUTLINE THE DISTRICT'S PLANNING STRATEGY FOR THE NEXT 20 YEARS. THE PLAN HAS BEEN PREPARED IN ACCORDANCE WITH CHAPTER 57.16 OF THE REVISED CODE OF WASHINGTON (RCW) AND SUPERSEDES THE 1997 WATER SYSTEM COMPREHENSIVE PLAN AND THE 2002 COMPREHENSIVE PLAN AMENDMENT. THIS PLAN ANALYZES THE DISTRICT'S EXISTING WATER SYSTEM, PROVIDES GUIDANCE TO EVALUATE THE IMPACTS OF FUTURE GROWTH, AND RECOMMENDS NECESSARY IMPROVEMENTS TO THE EXISTING WATER SYSTEM.

THE DISTRICT'S GOALS, AS SET FORTH IN THE 2015 WATER COMPREHENSIVE PLAN, ARE TO:

- PROVIDE SAFE, RELIABLE, AND TIMELY WATER SERVICE TO ITS CONSUMERS AT A FAIR AND REASONABLEPRICE.
- STRIVE TO PROVIDE ADEQUATE FIRE SUPPRESSION DURING EMERGENCY SITUATIONS.
- ENSURE THAT WATER SERVICE IS AVAILABLE TO SUPPORT DEVELOPMENT THAT IS CONSISTENT WITH THEDISTRICT'S POLICIES, CRITERIA AND STANDARDS AS WELL AS THE CURRENT LAND USE PLANS AND DEVELOPMENT REGULATIONS OF THE STATE OF WASHINGTON, KING COUNTY, CITY OF KENT, CITY OF COVINGTON, AND APPROPRIATE LOCAL PLANNING AGENCIES.
- PROTECT THE NATURAL ENVIRONMENT WITH OPERATIONAL AND CONSERVATION PROCEDURES.

THE 2023 WATER COMPREHENSIVE PLAN CARRIES FORWARD THE POLICIES AND INTENT OF THE 2007 PLAN AND PROVIDES UPDATED DOCUMENTATION AND DIRECTION FOR IMPLEMENTING THE KEY FUNCTIONS OF THE DISTRICT. THE PLAN IS DESIGNED TO FULFILL ALL LOCAL, STATE, AND FEDERAL OBLIGATIONS AND REGULATIONS AND IS A SUMMARY OF THE MANNER IN WHICH THE DISTRICT WILL CONTINUE TO FULFILL ITS MISSION AS A WATER SERVICE PROVIDER.

IN ADDITION, THE DISTRICT HAS IDENTIFIED $26.9 MILLION IN CAPITAL PROJECTS TO BE CONSTRUCTED OVER THE NEXT 20 YEARS. SIXTY-FIVE (24) PROJECTS ARE CONSIDERED SHORT TERM. THE REMAINING FOURTY (40) PROJECTS ARE CONSIDERED LONG-TERM (20-YEAR) PROJECTS TO BE CONSTRUCTED DURING THE NEXT 10 YEARS.

12. Location of the proposal. Give sufficient information for a person to understand the precise location of your proposed project, including a street address, if any, and section, township, and range, if known. If a proposal would occur over a range of area, provide the range or boundaries of the site(s). Provide a legal description, site plan, vicinity map, and topographic map, if reasonably available. While you should submit any plans required by the agency, you are not required to duplicate maps or detailed plans submitted with any permit applications related to this checklist.

THE 2023 WATER COMPREHENSIVE PLAN AREA IS COMPRISED OF ALL OR PORTIONS OF SECTIONS 21, 22, 23, 26, 27, 28, 33, 34 AND 35 OF TOWNSHIP 22 NORTH, RANGE 5 EAST, W.M. AND SECTIONS 3 AND 4 OF TOWNSHIP 21 NORTH, RANGE 5 EAST, W.M. THAT PORTION OF THE SOOS CREEK COMMUNITY PLAN EXTENDING FROM SE 240TH STREET ON THE NORTH TO SE 288TH STREET ON THE SOUTH, AND FROM 124TH AVE SE ON THE WEST TO 156TH AVE SE ON THE EAST.

B. ENVIRONMENTAL ELEMENTS

1. Earth

a. General description of the site:

(circle one): Flat, rolling, hilly, steep slopes, mountainous, other _____

b. What is the steepest slope on the site (approximate percent slope)?
SLOPES VARY FROM 5% TO 30%

c. What general types of soils are found on the site (for example, clay, sand, gravel, peat, muck)? If you know the classification of agricultural soils, specify them and note any agricultural land of long-term commercial significance and whether the proposal results in removing any of these soils.

ALDERWOOD GRAVELLY SANDY LOAM, 0-30% SLOPES (AGB, C AND D)
ALDERWOOD AND KITSAP SOILS, VERY STEEP (AKF)
ARENTS, ALDERWOOD MATERIAL, 0-15% SLOPES (AMB AND C)
BELLINGHAM SILT LOAM (BH)
EVERED GRAVELLY SANDY LOAM, 0-30% SLOPES (EvB, C AND D)
INDIANOLA LOAMY FINE SAND, 4-15% SLOPES (INC)
MIXED ALLUVIAL LAND (MA)
NORMA SANDY LOAM (No)
RAGNAR FINE SANDY LOAM, 6-15% SLOPES (RAC)
SEATLLE MUCK (SK)
SHALCAR MUCK (SM)
TUKWILA MUC (TU)
URBAN LAND (UR)

d. Are there surface indications or history of unstable soils in the immediate vicinity? If so, describe.

ACCORDING TO THE KING COUNTY SENSITIVE AREAS MAP FOLIO (DECEMBER 1990), THERE ARE SEISMIC HAZARD AREAS ALONG SOOS CREEK, WHICH FLOWS NORTHERLY AND SOUTHERLY THROUGH THE EASTERLY PORTION OF THE DISTRICT. THE MAP FOLIO ALSO INDICATES THAT THERE ARE LANDSLIDE HAZARD AREAS IN THE NORTHEASTERLY PORTION OF THE DISTRICT AND EROSION HAZARD AREAS IN MULTIPLE AREAS OF THE DISTRICT.

e. Describe the purpose, type, total area, and approximate quantities and total affected area of any filling, excavation, and grading proposed. Indicate source of fill.

THIS PLAN DOES NOT REQUIRE FILLING OR GRADING. EXCAVATION WILL BE REQUIRED FOR INSTALLATION OF WATER MAINS AND OTHER FACILITIES AND WILL BE ADDRESSED BY A PROJECT SPECIFIC SEPA AS NEEDED.

f. Could erosion occur as a result of clearing, construction, or use? If so, generally describe.

NOT AS A RESULT OF THIS PLAN. EROSION AS A RESULT OF CLEARING AND GRADING WILL BE ADDRESSED ON A PROJECT SPECIFIC BASIS.

g. About what percent of the site will be covered with impervious surfaces after project construction (for example, asphalt or buildings)?

NONE AS A RESULT OF THIS PLAN.

h. Proposed measures to reduce or control erosion, or other impacts to the earth, if any:

DOES NOT APPLY TO THIS PLAN, HOWEVER, WHERE APPLICABLE AN EROSION AND SEDIMENTATION CONTROL PLAN WOULD BE PREPARED FOR THOSE PROJECTS.

2. Air

a. What types of emissions to the air would result from the proposal during construction, operation, and maintenance when the project is completed? If any, generally describe and give approximate quantities if known.

DOES NOT APPLY. HOWEVER, DUST AND STANDARD EMISSIONS CONSTRUCTION EQUIPMENT COULD OCCUR FROM PROJECTS.

b. Are there any off-site sources of emissions or odor that may affect your proposal? If so, generally describe.

NO.

c. Proposed measures to reduce or control emissions or other impacts to air, if any:

DOES NOT APPLY. EMISSION CONTROLS WILL BE ADDRESSED FOR FUTURE DEVELOPMENT BY A PROJECT SPECIFIC SEPA CHECKLIST.

3. **Water**

a. Surface Water:

1) Is there any surface water body on or in the immediate vicinity of the site (including year-round and seasonal streams, saltwater, lakes, ponds, wetlands)? If yes, describe type and provide names. If appropriate, state what stream or river it flows into.

ACCORDING TO THE KING COUNTY SENSITIVE AREAS MAP FOLIO (DECEMBER 1990) AND INVENTORY, AS WELL AS OTHER DOCUMENTS, THERE ARE SEVERAL STREAMS, LAKES AND WETLANDS (OF VARIOUS CLASSIFICATIONS) WITHIN THE SERVICE PLANNING AREA. THEY INCLUDE BIG SOOS CREEK (CLASS 2 WITH SALMONIDS), CLARK LAKE, LAKE MERIDIAN AND THEIR ASSOCIATED WETLANDS AND TRIBUTARIES.

- THE WETLANDS WITHIN THE SERVICE PLANNING AREA ARE WITHIN THE GREEN RIVER BASIN IN THE SOOS CREEK SUBBASIN.
- SOOS CREEK WETLAND NO. 29 IS A CLASS 2 PALUSTRINE AQUATIC BED FLOATING-LEAVED (WATER SHIELD), OPEN WATER.
- SOOS CREEK WETLAND NO. 30 IS A CLASS 2 PALUSTRINE FORESTED BROAD-LEAVED DECIDUOUS (RED ALDER!BLACK COTIONWOOD).
- PALUSTRINE EMERGENT NARROW-LEAVED PERSISTENT (JUNCUS EFFUSUS/SCIRPUS MICROCARPUS) AND PALUSTRINE EMERGENT NARROW-LEAVED PERSISTENT (CATIAIL).
- SOOS CREEK WETLAND NO. 37 IS A CLASS 3 PALUSTRINE, OPEN WATER.
- SOOS CREEK WETLAND NO. 38 IS A CLASS 3 PALUSTRINE, OPEN WATER.
- SOOS CREEK WETLAND NO. 39 IS A CLASS 3 PALUSTRINE, OPEN WATER.
- SOOS CREEK WETLAND NO. 41 IS A CLASS 2 PALUSTRINE EMERGENT PERSISTENT (RUSH/GRASSES), WET MEADOW.
- SOOS CREEK WETLAND NO. 45 IS A CLASS 2 LACUSTRINE L1MNETIC, OPEN WATER - LAKE MERIDIAN.
- SOOS CREEK WETLAND NO. 47 IS A CLASS 2 PALUSTRINE EMERGENT PERSISTENT (CATIAIUBUTIERCUP) AND PALUSTRINE FORESTED DECIDUOUS (ALDER!ASH/HARDHACK).
- SOOS CREEK WETLAND NO. 481s A CLASS 2 PALUSTRINE, OPEN WATER.
- SOOS CREEK WETLAND NO. 49 IS A CLASS 2 PALUSTRINE EMERGENT NARROW-LEAVED PERSISTENT (JUNCUS EFFUSUS/SCIRPUS SPP.) AND PALUSTRINE SCRUB-SHRUB BROAD-LEAVED DECIDUOUS (WILLOW/HARDHACK).
- SOOS CREEK WETLAND NO. 53 IS A CLASS 2 PALUSTRINE FORESTED BROAD-LEAVED DECIDUOUS (RED ALDER) AND PALUSTRINE EMERGENT NARROW-LEAVED PERSISTENT (REED CANARY GRASS).
- SOOS CREEK WETLAND NO. 54 IS A CLASS 2 PALUSTRINE UNCONSOLIDATED BOTIOM MUD, OPEN WATER.
- SOOS CREEK WETLAND NO. 55 IS A CLASS 3 PALUSTRINE, OPEN WATER.
- SOOS CREEK WETLAND NO. 56 IS A CLASS 2 PALUSTRINE, OPEN WATER.

- SOOS CREEK WETLAND NO. 68 IS A CLASS 2 PALUSTRINE FORESTED NEEDLE-LEAVED EVERGREEN (WESTERN RED CEDAR) AND PALUSTRINE FORESTED DEAD (ALDER).
- SOOS CREEK WETLAND NO. 84 IS A CLASS 2 PALUSTRINE FORESTED BROAD-LEAVED DECIDUOUS (RED ALDER), PALUSTRINE FORESTED NEEDLE-LEAVED EVERGREEN (HEMLOCK) AND PALUSTRINE SCRUBSHRUB BROAD-LEAVED DECIDUOUS (HARDHACK).
- SOOS CREEK WETLAND NO. 87 IS A CLASS 2 PALUSTRINE EMERGENT NARROW-LEAVED PERSISTENT (SCIRPUS MICROCARPUS), SHALLOW MARSH.
- SOOS CREEK WETLAND NO. 981S A CLASS 2 PALUSTRINE, OPEN WATER.
- SOOS CREEK WETLAND NO. 991s A CLASS 3 PALUSTRINE, OPEN WATER.
- THERE ARE SEVERAL WETLANDS DESIGNATED "B" AND ARE MAPPED BY THE U.S. FISH AND WILDLIFE SERVICE NATIONAL WETLANDS INVENTORY, BUT THEIR LOCATIONS HAVE NOT BEEN FIELD VERIFIED.

2) Will the project require any work over, in, or adjacent to (within 200 feet) the described waters? If yes, please describe and attach available plans.

THE 2023 WATER COMPREHENSIVE PLAN DOES NOT REQUIRE ANY WORK NEAR THE DESCRIBED WATERS. HOWEVER, ADOPTION OF THE PLAN WILL LEAD TO THE EVENTUAL DESIGN AND CONSTRUCTION OF AN APPROPRIATE WATER SYSTEM TO PROTECT THE HEALTH AND WELFARE OF THE RESIDENT IN THE AREA, PER FEDERAL, STATE AND LOCAL REQUIREMENTS. SPECIFIC PROJECTS MAY REQUIRE WORK WITHIN THE AREAS OF CONCERN AND WILL REQUIRE THEIR OWN ENVIRONMENTAL EVALUATION.

3) Estimate the amount of fill and dredge material that would be placed in or removed from surface water or wetlands and indicate the area of the site that would be affected. Indicate the source of fill material.

NONE AS A RESULT OF THIS PLAN PROPOSAL.

4) Will the proposal require surface water withdrawals or diversions? Give general description, purpose, and approximate quantities if known.

NO.

5) Does the proposal lie within a 100-year floodplain? If so, note location on the site plan.

THE NORTHEASTERLY PORTION OF THE SERVICE PLANNING AREA, WHICH INTERSECTS PORTIONS OF THE BIG SOOS CREEK, IS WITHIN PORTIONS OF THAT WATER BODY'S 100 YEAR FLOODPLAIN.

6) Does the proposal involve any discharges of waste materials to surface waters? If so, describe the type of waste and anticipated volume of discharge.

NO.

b. Ground Water:

1) Will groundwater be withdrawn from a well for drinking water or other purposes? If so, give a general description of the well, proposed uses and approximate quantities withdrawn from the well. Will water be discharged to groundwater? Give general description, purpose, and approximate quantities if known.

THERE WILL BE NO GROUNDWATER WITHDRAWALS AS A RESULT OF THE ADOPTION OF THE 2023 WATER COMPREHENSIVE PLAN.

2) Describe waste material that will be discharged into the ground from septic tanks or other sources, if any (for example: Domestic sewage; industrial, containing the following chemicals. . . ; agricultural; etc.). Describe the general size of the system, the number of such systems, the number of houses to be served (if applicable), or the number of animals or humans the system(s) are expected to serve.

NO WASTE MATERIALS WILL BE DISCHARGED INTO THE GROUND AS A RESULT OF THIS PLAN.

c. Water runoff (including stormwater):

1) Describe the source of runoff (including storm water) and method of collection and disposal, if any (include quantities, if known). Where will this water flow? Will this water flow into other waters? If so, describe.

DOES NOT APPLY.

2) Could waste materials enter ground or surface waters? If so, generally describe.

DOES NOT APPLY.

3) Does the proposal alter or otherwise affect drainage patterns in the vicinity of the site? If so, describe.

DOES NOT APPLY.

d. Proposed measures to reduce or control surface, ground, and runoff water, and drainage pattern impacts, if any:

DOES NOT APPLY.

4. **Plants**

a. Check the types of vegetation found on the site:

__**X**__deciduous tree: **ALDER, MAPLE, ASPEN,** other **ASH, BLACK, COTTONWOOD, HARDHACK, WILLOW**
__X__evergreen tree: **FIR, CEDAR, PINE,** other **HEMLOCK, SPRUCE**
__X__shrubs
__X__grass
__X__pasture
____crop or grain
____ Orchards, vineyards or other permanent crops.
__X__ wet soil plants: **CATTAIL, BUTTERCUP, BULLRUSH,** skunk cabbage, other **HORSETAIL**
__X__water plants: **WATER LILY,** eelgrass, milfoil, other **POND WEED**
____other types of vegetation

b. What kind and amount of vegetation will be removed or altered?

DOES NOT APPLY. HOWEVER, SPECIFIC PROJECTS WILL GENERALLY ADDRESS AREAS AFFECTED BY CONSTRUCTION WHICH, AS MITIGATION, WOULD BE RESTORED TO THEIR ORIGINAL CONDITIONS BASED ON PRECONSTRUCTION PHOTOGRAPHS OF THE SITE.

c. List threatened and endangered species known to be on or near the site.

NONE KNOWN.

d. Proposed landscaping, use of native plants, or other measures to preserve or enhance vegetation on the site, if any:

DOES NOT APPLY. HOWEVER, SPECIFIC PROJECTS WILL GENERALLY ADDRESS AREAS AFFECTED BY CONSTRUCTION WHICH, AS MITIGATION, WOULD BE RESTORED TO THEIR ORIGINAL CONDITIONS BASED ON PRECONSTRUCTION PHOTOGRAPHS OF THE SITE.

e. List all nocious weeds and invasive species known to be in or near the site:

ACCORDING TO THE KING COUNTY NOXIOUS WEEDS WEBSITE, THE WEEDS IN THE ARAE INCLUDE: TANSY RAGWORT, GARLIC MUSTARD, SULFUR CINQUEFOIL AND ORANGE HAWKWEED ARE WITHIN THE BOINDARIES OF LAKE MERIDIAN WATER DISTRICT WITH GORSE AND GIANT HOGWEED NEARBY.

5. **Animals**

a. List any birds and other animals which have been observed on or near the site or are known to be on or near the site.

Examples include:

birds: **HAWK,** heron, **EAGLE, SONGBIRDS,** other: **MALLARD, ROBIN, SWALLOW, SPARROW, THRUSH, WARBLER, GROUSE, PHEASANT, GOLDFINCH**
mammals: deer, bear, elk, beaver, other: **RACCOONS, SQUIRRELS, MICE**
fish: bass, **SALMON, TROUT,** herring, shellfish, other _____

b. List any threatened and endangered species known to be on or near the site.

IT IS UNKNOWN IF EITHER THE TROUT OR THE SALMON (WHICH ARE FOUND IN THE LAKE AND STREAMS) ARE OFFICIAL REGISTERED SPECIES. HOWEVER, BOTH TROUT AND SALMON ARE SPECIES OF CONCERN. ENVIRONMENTAL STUDIES FOR SPECIFIC PROJECTS WOULD ALSO LIST ANY KNOWN SPECIES. SOME SPECIES OF HAWKS AND EAGLES ARE LISTED AS THREATENED SPECIES.

c. Is the site part of a migration route? If so, explain.

UNKNOWN, THOUGH KING COUNTY GIS INFORMATION INDICATES A NETWORK CORRIDOR, WHICH FOLLOWS BIG SOOS CREEK AND EXTENDS ALONG THE SOUTHWEST END OF LAKE MERIDIAN.

d. Proposed measures to preserve or enhance wildlife, if any:

DOES NOT APPLY; IMPACTS ARE NOT ANTICIPATED AS A RESULT OF THIS PROPOSAL. HOWEVER, FUTURE PROJECT ACTIONS WOULD ADDRESS POTENTIAL MEASURES IF NECESSARY.

e. List any invasive animal species known to be on or near the site.

UNKNOWN.

6. Energy and Natural Resources

a. What kinds of energy (electric, natural gas, oil, wood stove, solar) will be used to meet the completed project's energy needs? Describe whether it will be used for heating, manufacturing, etc.

DOES NOT APPLY.

b. Would your project affect the potential use of solar energy by adjacent properties? If so, generally describe.

DOES NOT APPLY.

c. What kinds of energy conservation features are included in the plans of this proposal? List other proposed measures to reduce or control energy impacts, if any:

DOES NOT APPLY.

7. Environmental Health

a. Are there any environmental health hazards, including exposure to toxic chemicals, risk of fire and explosion, spill, or hazardous waste, that could occur as a result of this proposal? If so, describe.

NO.

1) Describe any known or possible contamination at the site from present or past uses.

DOES NOT APPLY.

2) Describe existing hazardous chemicals/conditions that might affect project development and design. This includes underground hazardous liquid and gas transmission pipelines located within the project area and in the vicinity.

DOES NOT APPLY.

3) Describe any toxic or hazardous chemicals that might be stored, used, or produced during the project's development or construction, or at any time during the operating life of the project.

DOES NOT APPLY.

4) Describe special emergency services that might be required.

DOES NOT APPLY.

5) Proposed measures to reduce or control environmental health hazards, if any:

DOES NOT APPLY.

b. Noise

1) What types of noise exist in the area which may affect your project (for example: traffic, equipment, operation, other)?

DOES NOT APPLY. HOWEVER, FOR SPECIFIC PRO.IECTS THERE ARE LOCATIONS WHICH HAVE HEAVY TRAFFIC ON ADJACENT ARTERIALS.

2) What types and levels of noise would be created by or associated with the project on a short-term or a long-term basis (for example: traffic, construction, operation, other)? Indicate what hours noise would come from the site.

DOES NOT APPLY. HOWEVER, FOR SPECIFIC PROJECTS CONSTRUCTION EQUIPMENT WOULD BE OPERATED DURING REGULAR WORKING HOURS DURING THE CONSTRUCTION PHASE. ALL OPERATIONAL EQUIPMENT NOISES WILL BE WITHIN ALLOWABLE RESIDENTIAL LIMITS.

3) Proposed measures to reduce or control noise impacts, if any:

DOES NOT APPLY. HOWEVER, FOR SPECIFIC PROJECTS CONSTRUCTION EQUIPMENT WOULD BE MUFFLED. CONSTRUCTION SCHEDULES WILL BE LIMITED TO NORMAL WORKING HOURS.

8. **Land and Shoreline Use**

a. What is the current use of the site and adjacent properties? Will the proposal affect current land uses on nearby or adjacent properties? If so, describe.

THE MAJORITY OF THE DISTRICT IS DESIGNATED URBAN WITH A SMALL PORTION OF RURAL AREAS IN THE NORTHEAST CORNER. THE URBAN LANDS ARE PREDOMINATELY MEDIUM DENSITY WITH SOME MULTIFAMILY, OFFICE, COMMERCIAL, BUSINESS, AND LOW DENSITY RESIDENTIAL AND THE RURAL AREA IS DESIGNATED 1 UNIT PER 5 ACRES.

b. Has the project site been used as working farmlands or working forest lands? If so, describe. How much agricultural or forest land of long-term commercial significance will be converted to other uses as a result of the proposal, if any? If resource lands have not been designated, how many acres in farmland or forest land tax status will be converted to nonfarm or nonforest use?

NONE KNOWN.

1) Will the proposal affect or be affected by surrounding working farm or forest land normal business operations, such as oversize equipment access, the application of pesticides, tilling, and harvesting? If so, how:

DOES NOT APPLY. HOWEVER, FOR SPECIFIC PROJECTS THERE COULD BE TRAFFIC IMPACTS. THAT WOULD BE EVALUATEDON A PER PROJECT BASIS.

c. Describe any structures on the site.

THERE ARE MANY DIFFERENT TYPES OF STRUCTURES WITHIN THE SERVICE PLANNING AREA.

d. Will any structures be demolished? If so, what?

DOES NOT APPLY.

e. What is the current zoning classification of the site?

THE CITY OF KENT, CITY OF COVINGTON AND KING COUNTY HAVE JURISDICTION OVER THE SERVICE PLANNING AREA. THE MAJORITY OF THE DISTRICT IS DESIGNATED URBAN WITH A SMALL PORTION OF RURAL AREA IN THE NORTHEAST CORNER. THE URBAN LAND USE DESIGNATIONS ARE PREDOMINATELY MEDIUM DENSITY RESIDENTIAL (4-8 DWELLING UNITS PER ACRE) GENERALLY, WITH MULTIFAMILY, OFFICE, COMMERCIAL, BUSINESS. AND SOME LOW DENSITY RESIDENTIAL (1 UNIT PER ACRE) AND RURAL (1 UNIT PER 5 ACRES).

f. What is the current comprehensive plan designation of the site?

THE KING COUNTY COMPREHENSIVE PLAN HAS DESIGNATED THE AREA URBAN WITH THE EXCEPTION OF A SMALL PORTION IN THE NORTHEAST CORNER OF THE DISTRICT WHICH IS DESIGNATED RURAL. THE STUDY AREA INCLUDES BOTH.

g. If applicable, what is the current shoreline master program designation of the site?

LAKE MERIDIAN HAS AN URBAN DESIGNATION IN THE KING COUNTY MASTER SHORELINE MANAGEMENT PROGRAM ADOPTED APRIL 1, 1985.

h. Has any part of the site been classified as a critical area by the city or county? If so, specify.

THE KNOWN SENSITIVE AREAS ARE THOSE WHICH HAVE BEEN IDENTIFIED IN SECTIONS 81-D AND 83 OF THIS DOCUMENT.

i. Approximately how many people would reside or work in the completed project?

DOES NOT APPLY.

j. Approximately how many people would the completed project displace?

DOES NOT APPLY.

k. Proposed measures to avoid or reduce displacement impacts, if any:

DOES NOT APPLY.

L. Proposed measures to ensure the proposal is compatible with existing and projected land uses and plans, if any:

EACH PROJECT WILL BE REVIEWED FOR COMPATIBILITY WITH EXISTING AND PROJECTED LAND USES AND PLANS. PROJECTS WILL ALSO BE REVIEWED BY THE APPROPRIATE AGENCIES.

m. Proposed measures to reduce or control impacts to agricultural and forest lands of long-term commercial significance, if any:

DOES NOT APPLY.

9. **Housing**

a. Approximately how many units would be provided, if any? Indicate whether high, middle, or low-income housing.

DOES NOT APPLY.

b. Approximately how many units, if any, would be eliminated? Indicate whether high, middle, or low-income housing.

DOES NOT APPLY.

c. Proposed measures to reduce or control housing impacts, if any:

DOES NOT APPLY.

10. **Aesthetics**

a. What is the tallest height of any proposed structure(s), not including antennas; what is the principal exterior building material(s) proposed?

DOES NOT APPLY. HOWEVER, THE RESERVOIR PROJECTS WILL REQUIRE THEIR OWN ENVIRONMENTAL CHECKLIST.

b. What views in the immediate vicinity would be altered or obstructed?

DOES NOT APPLY. HOWEVER, THE RESERVOIR PROJECTS WILL REQUIRE THEIR OWN ENVIRONMENTAL CHECKLIST.

c. Proposed measures to reduce or control aesthetic impacts, if any:

DOES NOT APPLY. HOWEVER, THE RESERVOIR PROJECTS WILL REQUIRE THEIR OWN ENVIRONMENTAL CHECKLIST.

11. **Light and Glare**

a. What type of light or glare will the proposal produce? What time of day would it mainly occur?

DOES NOT APPLY.

b. Could light or glare from the finished project be a safety hazard or interfere with views?

DOES NOT APPLY.

c. What existing off-site sources of light or glare may affect your proposal?

DOES NOT APPLY.

d. Proposed measures to reduce or control light and glare impacts, if any:

DOES NOT APPLY.

12. **Recreation**

a. What designated and informal recreational opportunities are in the immediate vicinity?

THERE ARE SEVERAL PARKS WITHIN THE AREA. THEY INCLUDE GARY GRANT SOOS CREEK PARK, EASTRIDGE PARK, MERIDIAN GLEN PARK, LAKE MERIDIAN PARK, SPRINGWOOD PARK AND MERIDIAN VALLEY GOLF & COUNTRY CLUB.

b. Would the proposed project displace any existing recreational uses? If so, describe.

NONE KNOWN.

c. Proposed measures to reduce or control impacts on recreation, including recreation opportunities to be provided by the project or applicant, if any:

DOES NOT APPLY.

13. **Historic and cultural preservation**

a. Are there any buildings, structures, or sites, located on or near the site that are over 45 years old listed in or eligible for listing in national, state, or local preservation registers ? If so, specifically describe.

NONE KNOWN.

b. Are there any landmarks, features, or other evidence of Indian or historic use or occupation? This may include human burials or old cemeteries. Are there any material evidence, artifacts, or areas of cultural importance on or near the site? Please list any professional studies conducted at the site to identify such resources.

NONE KNOWN.

c. Describe the methods used to assess the potential impacts to cultural and historic resources on or near the project site. Examples include consultation with tribes and the department of archeology and historic preservation, archaeological surveys, historic maps, GIS data, etc.

DOES NOT APPLY.

d. Proposed measures to avoid, minimize, or compensate for loss, changes to, and disturbance to resources. Please include plans for the above and any permits that may be required.

DOES NOT APPLY.

14. **Transportation**

a. Identify public streets and highways serving the site or affected geographic area and describe proposed access to the existing street system. Show on site plans, if any.

THE SITES FOR THE PROPOSED PROJECTS PUBLIC STREETS WITH A FEW EXCEPTIONS.

THERE ARE A NUMBER OF STREETS AND HIGHWAYS WITHIN THE SERVICE AREA. KENT-KANGLEY ROAD (SE 272ND STREET) AND SE 256TH STREET ARE THE MAJOR EASTIWEST ARTERIALS AND 132ND AVENUE SE AND 148TH AVENUE SE ARE THE NORTH/SOUTH ARTERIALS, AMONG OTHERS.

b. Is the site or affected geographic area currently served by public transit? If so, generally describe. If not, what is the approximate distance to the nearest transit stop?

METRO HAS SERVICE ROUTES ALONG SE 256TH STREET AND SE 272ND STREET, WHICH PROVIDES SERVICE TO KENT AND OTHER METRO ROUTES.

c. How many additional parking spaces would the completed project or non-project proposal have? How many would the project or proposal eliminate?

DOES NOT APPLY.

d. Will the proposal require any new or improvements to existing roads, streets, pedestrian, bicycle or state transportation facilities, not including driveways? If so, generally describe (indicate whether public or private).

NO NEW ROADS WILL BE REQUIRED. CONSTRUCTION WILL OCCUR ON EXISTING ROADS. ROAD PATCHING AND REPAIR WILL OCCUR AS NECESSARY.

e. Will the project or proposal use (or occur in the immediate vicinity of) water, rail, or air transportation? If so, generally describe.

NO.

f. How many vehicular trips per day would be generated by the completed project or proposal? If known, indicate when peak volumes would occur and what percentage of the volume would be trucks (such as commercial and nonpassenger vehicles). What data or transportation models were used to make these estimates?

DOES NOT APPLY.

g. Will the proposal interfere with, affect or be affected by the movement of agricultural and forest products on roads or streets in the area? If so, generally describe.

NONE SHOULD BE REQUIRED.

h. Proposed measures to reduce or control transportation impacts, if any:

DOES NOT APPLY.

15. **Public Services**

a. Would the project result in an increased need for public services (for example: fire protection, police protection, public transit, health care, schools, other)? If so, generally describe.

NOT AS A RESULT OF THIS PLAN.

b. Proposed measures to reduce or control direct impacts on public services, if any.

DOES NOT APPLY.

16. **Utilities**

a. Circle utilities currently available at the site:

ELECTRICITY, NATURAL GAS, WATER, REFUSE SERVICE, TELEPHONE, SANITARY SEWER, SEPTIC SYSTEM, other _____

b. Describe the utilities that are proposed for the project, the utility providing the service, and the general construction activities on the site or in the immediate vicinity which might be needed.

THE 2023 WATER COMPREHENSIVE PLAN SERVES AS A GUIDE FOR THE CONTROLLED EXPANSION OF WATER SERVICE WITHIN THE SERVICE AREA. SUBSEQUENT ACTIONS MAY INCLUDE CONSTRUCTION OF WATER MAINS, INTERTIES AND STORAGE FACILITIES CONSISTENT WITH THE SOUTH KING COUNTY COORDINATED WATER SUPPLY PLANS, THE KING COUNTY AND THE CITIES OF KENT AND COVINGTON COMPREHENSIVE PLANS AND THE AREA ZONING. WATER SERVICE WILL BE PROVIDED BY LAKE MERIDIAN WATER DISTRICT.

C. Signature

The above answers are true and complete to the best of my knowledge. I understand that the lead agency is relying on them to make its decision.

Signature: William C. Hall

Name of signee WILLIAM C. HALL

Position and Agency/Organization GENERAL MANAGER – LAKE MERIDIAN WATER DISTRICT

Date Submitted: 3/7/2023

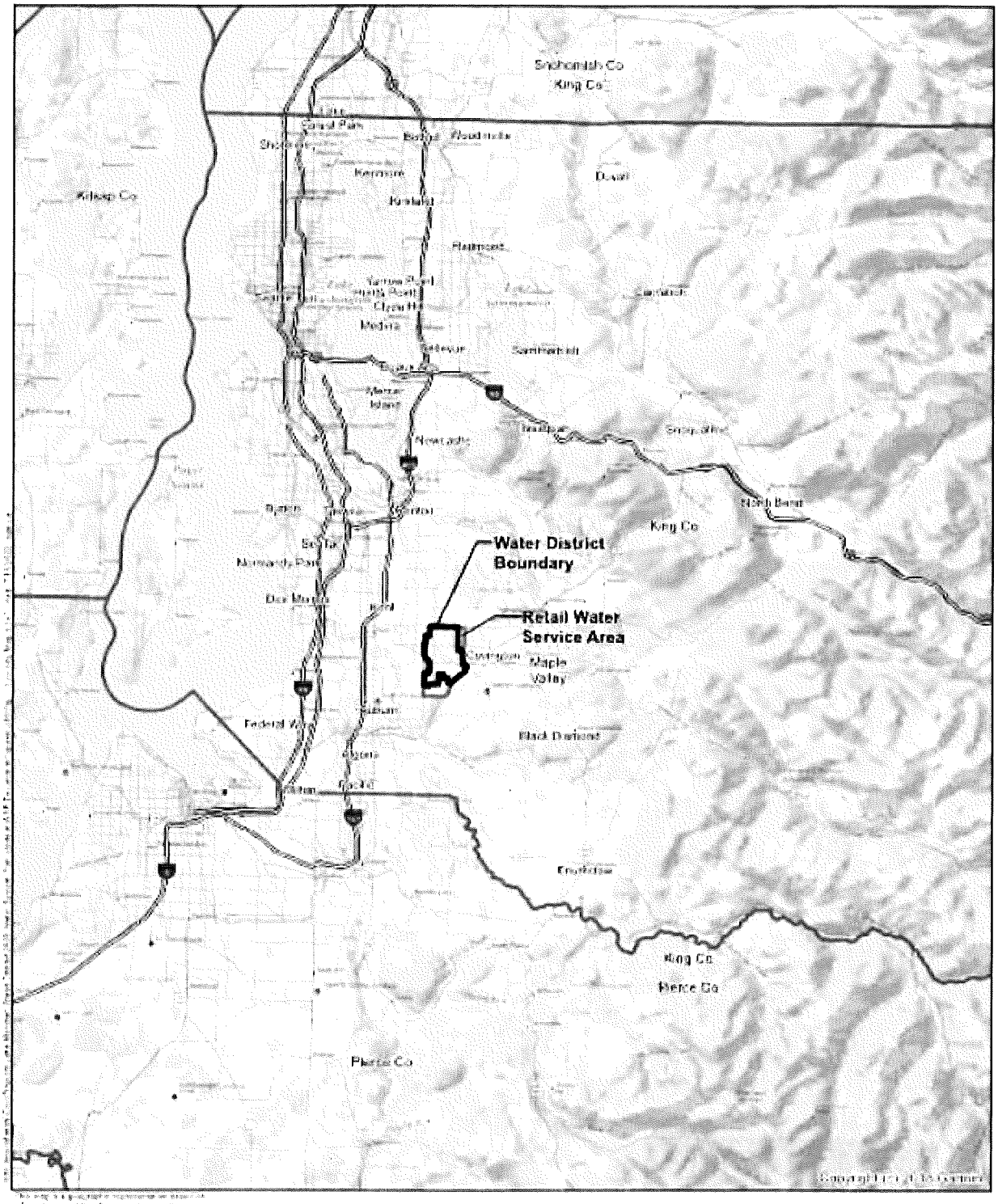

bhc

N

Lake Meridian Water District

Vicinity Map

2022 Water System Plan Update
Lake Meridian Water District
July 2022

Figure
1-1

D. supplemental sheet for nonproject actions

(**IT IS NOT NECESSARY** to use this sheet for project actions)

Because these questions are very general, it may be helpful to read them in conjunction with the list of the elements of the environment.

When answering these questions, be aware of the extent the proposal, or the types of activities likely to result from the proposal, would affect the item at a greater intensity or at a faster rate than if the proposal were not implemented. Respond briefly and in general terms.

1. How would the proposal be likely to increase discharge to water; emissions to air; production, storage, or release of toxic or hazardous substances; or production of noise?

THE LAKE MERIDIAN WATER DISTRICT 2023 WATER COMPREHENSIVE PLAN WILL NOT AFFECT THE ENVIRONMENT. THE PLAN RESPONDS, IN AN ORDERLY MANNER, TO FUTURE DEVELOPMENT AS APPROVED BY VARIOUS AGENCIES, IN ACCORDANCE WITH FEDERAL, STATE AND LOCAL REQUIREMENTS. SUBSEQUENT ACTIONS MAY INCLUDE PROPERTY OWNER REQUESTS FOR CONSTRUCTION OF WATER MAINS CONSISTENT WITH KING COUNTY AND CITIES OF KENT AND COVINGTON GUIDELINES.

Proposed measures to avoid or reduce such increases are:

PROPOSED PROJECTS WILL BE REVIEWED AND ADDRESSED BY APPROPRIATE AGENCIES AS PROJECTS COMMENCE. ADDITIONALLY, DEVELOPMENT AND GROWTH WILL BE MONITORED AND CONTROLLED BY THE APPROPRIATE KING COUNTY AGENCIES AND THE CITY OF KENT.

2. How would the proposal be likely to affect plants, animals, fish, or marine life?

THE PROPOSED PROJECTS AND POTENTIAL DEVELOPMENT WILL RESULT IN THE LOSS OF PLANTS WHERE WATER SYSTEM FACILITIES ARE INSTALLED ALONG EASEMENTS OR ON SPECIFIC SITES. IT IS NOT ANTICIPATED THAT THE PROPOSED PROJECTS WILL HAVE A SIGNIFICANT IMPACT UPON FISH OR WILDLIFE.

Proposed measures to protect or conserve plants, animals, fish, or marine life are:

PROPOSED PROJECTS WILL BE REVIEWED AND ADDRESSED BY APPROPRIATE AGENCIES AS THEY COMMENCE.

3. How would the proposal be likely to deplete energy or natural resources?

DOES NOT APPLY. THE PROPOSAL WILL HAVE NO DIRECT EFFECT UPON ENERGY RESOURCES OR MOST NATURAL RESOURCES. THE PLAN DOES HAVE A STRONG CONSERVATION ELEMENT WITHIN IT WHICH WILL FACILITATE THE USAGE OF LESS WATER RESOURCES. IT IS POSSIBLE THAT THERE MAY BE SOME LOCATIONS WHERE TREES MAY BE CUT AND NOT REPLANTED IN SOME DEVELOPMENT LOCATIONS.

Proposed measures to protect or conserve energy and natural resources are:

DEVELOPMENT MUST CONFORM TO KING COUNTY AND THE CITIES OF KENT AND COVINGTON GUIDELINES AND REGULATIONS.

4. How would the proposal be likely to use or affect environmentally sensitive areas or areas designated (or eligible or under study) for governmental protection; such as parks, wilderness, wild and scenic rivers, threatened or endangered species habitat, historic or cultural sites, wetlands, floodplains, or prime farmlands?

THE 2023 WATER COMPREHENSIVE PLAN WILL NOT AFFECT THE CURRENT USAGE OF SITES. PROJECTS WITHIN THE SERVICE AREA WILL NEED TO ADDRESS THESE CONCERNS MORE SPECIFICALLY.

Proposed measures to protect such resources or to avoid or reduce impacts are:

PROPOSED PROJECTS WILL BE REVIEWED AND ADDRESSED BY APPROPRIATE AGENCIES, AS THE PROJECTS COMMENCE.

5. How would the proposal be likely to affect land and shoreline use, including whether it would allow or encourage land or shoreline uses incompatible with existing plans?

THIS PLAN DOES NOT ALLOW OR ENCOURAGE USES INCOMPATIBLE WITH EXISTING PLANS. THE PLAN DOES SHOW SOME PROPOSED FACILITIES IN THE VICINITY OF WATER BODIES, HOWEVER, LAND AND SHORELINE USES SHOULD NOT BE AFFECTED.

Proposed measures to avoid or reduce shoreline and land use impacts are:

CONFORMANCE TO APPLICABLE KING COUNTY AND CITIES OF KENT AND COVINGTON GUIDELINES, ZONING REQUIREMENTS, ALL . STATE REGULATIONS AND DISTRICT STANDARDS WOULD BE REQUIRED WHEN FUTURE DEVELOPMENT OCCURS.

6. How would the proposal be likely to increase demands on transportation or public services and utilities?

THE 2023 WATER COMPREHENSIVE PLAN DOES NOT CONFLICT WITH ANY KNOWN ENVIRONMENTAL LAWS. DEVELOPMENT AND GROWTH WHICH MAY FOLLOW WILL BE IN ACCORDANCE WITH ENVIRONMENTAL RESTRICTIONS, AS WELL AS LOCAL GUIDELINES. THE PLAN RECOMMENDS PROJECTS THAT WILL ADD TO AND IMPROVE THE EXISTING WATER SYSTEM IN RESPONSE TO DEVELOPMENT. THE PLAN IS NOT LIKELY TO INCREASE THE DEMAND UPON TRANSPORTATION.

Proposed measures to reduce or respond to such demand(s) are:

GROWTH WILL BE GUIDED BY KING COUNTY AND THE CITIES OF KENT AND COVINGTON COMPREHENSIVE AND COMMUNITY PLANNING. UTILITIES AND SERVICES MAY BE EXTENDED AND EXPANDED TO MEET THESE PROJECTED NEEDS.

7. Identify, if possible, whether the proposal may conflict with local, state, or federal laws or requirements for the protection of the environment.

THE 2023 WATER COMPREHENSIVE PLAN DOES NOT CONFLICT WITH ANY KNOWN ENVIRONMENTAL LAWS. PORTIONS OF SOME OF THE PROJECTS MAY REQUIRE A UTILITY EXCEPTION FOR MINOR VARIANCES TO PORTIONS OF THE SENSITIVE AREAS ORDINANCE. DEVELOPMENT AND GROWTH WHICH MAY FOLLOW WILL BE IN ACCORDANCE WITH ENVIRONMENTAL RESTRICTIONS, AS WELL AS COUNTY AND CITY PLANNING GUIDELINES.

WAC 197-11-970 Determination of nonsignificance (DNS).

DETERMINATION OF NONSIGNIFICANCE

Description of proposal:
LAKE MERIDIAN WATER DISTRICT HAS PREPARED THIS WATER COMPREHENSIVE PLAN TO OUTLINE THE DISTRICT'S PLANNING STRATEGY FOR THE NEXT 20 YEARS. THE PLAN HAS BEEN PREPARED IN ACCORDANCE WITH CHAPTER 57.16 OF THE REVISED CODE OF WASHINGTON (RCW) AND SUPERSEDES THE 1997 WATER SYSTEM COMPREHENSIVE PLAN AND THE 2002 COMPREHENSIVE PLAN AMENDMENT. THIS PLAN ANALYZES THE DISTRICT'S EXISTING WATER SYSTEM, PROVIDES GUIDANCE TO EVALUATE THE IMPACTS OF FUTURE GROWTH, AND RECOMMENDS NECESSARY IMPROVEMENTS TO THE EXISTING WATER SYSTEM.

THE DISTRICT'S GOALS, AS SET FORTH IN THE 2023 WATER COMPREHENSIVE PLAN, ARE TO:

- PROVIDE SAFE, RELIABLE, AND TIMELY WATER SERVICE TO ITS CONSUMERS AT A FAIR AND REASONABLEPRICE.
- STRIVE TO PROVIDE ADEQUATE FIRE SUPPRESSION DURING EMERGENCY SITUATIONS.
- ENSURE THAT WATER SERVICE IS AVAILABLE TO SUPPORT DEVELOPMENT THAT IS CONSISTENT WITH THEDISTRICT'S POLICIES, CRITERIA AND STANDARDS AS WELL AS THE CURRENT LAND USE PLANS AND DEVELOPMENT REGULATIONS OF THE STATE OF WASHINGTON, KING COUNTY, CITY OF KENT, CITY OF COVINGTON, AND APPROPRIATE LOCAL PLANNING AGENCIES.
- PROTECT THE NATURAL ENVIRONMENT WITH OPERATIONAL AND CONSERVATION PROCEDURES.

THE 2023 WATER COMPREHENSIVE PLAN CARRIES FORWARD THE POLICIES AND INTENT OF THE 2007 PLAN AND PROVIDES UPDATED DOCUMENTATION AND DIRECTION FOR IMPLEMENTING THE KEY FUNCTIONS OF THE DISTRICT. THE PLAN IS DESIGNED TO FULFILL ALL LOCAL, STATE, AND FEDERAL OBLIGATIONS AND REGULATIONS AND IS A SUMMARY OF THE MANNER IN WHICH THE DISTRICT WILL CONTINUE TO FULFILL ITS MISSION AS A WATER SERVICE PROVIDER.

IN ADDITION, THE DISTRICT HAS IDENTIFIED $26.9 MILLION IN CAPITAL PROJECTS TO BE CONSTRUCTED OVER THE NEXT 20 YEARS. SIXTY-FIVE (24) PROJECTS ARE CONSIDERED SHORT TERM. THE REMAINING FOURTY (40) PROJECTS ARE CONSIDERED LONG-TERM (20-YEAR) PROJECTS TO BE CONSTRUCTED DURING THE NEXT 10 YEARS.

Proponent:
LAKE MERIDIAN WATER DISTRICT

Location of proposal, including street address, if any:
THE 2023 WATER COMPREHENSIVE PLAN AREA IS COMPRISED OF ALL OR PORTIONS OF SECTIONS 21, 22, 23, 26, 27, 28, 33, 34 AND 35 OF TOWNSHIP 22 NORTH, RANGE 5 EAST, W.M. AND SECTIONS 3 AND 4 OF TOWNSHIP 21 NORTH, RANGE 5 EAST, W.M. THAT PORTION OF THE SOOS CREEK COMMUNITY PLAN EXTENDING FROM SE 240TH STREET ON THE NORTH TO SE 288TH STREET ON THE SOUTH, AND FROM 124TH AVE SE ON THE WEST TO 156TH AVE SE ON THE EAST.

Lead agency:
LAKE MERIDIAN WATER DISTRICT

The lead agency for this proposal has determined that it does not have a probable significant adverse impact on the environment. An environmental impact statement (EIS) is not required under RCW 43.21C.030 (2)(c). This decision was made after review of a completed environmental checklist and other information on file with the lead agency. This information is available to the public on request.

☐ There is no comment period for this DNS.

☐ This DNS is issued after using the optional DNS process in WAC 197-11-355. There is no further comment period on the DNS.

☒ This DNS is issued under WAC 197-11-340(2); the lead agency will not act on this proposal for 14 days from the date below. Comments must be submitted by March 22, 2023.

Responsible official William C. Hall

Position/title General Manager and Responsible SEPA Official , Lake Meridian Water District Phone:253-631-3770

Address 27224 144th Ave SE , Kent, Washington 98042

Date. 3/7/2023 Signature William C. Hall

☒ There is no agency appeal.

THIS PAGE INTENTIONALLY BLANK.

Appendix B

Comments and Responses

THIS PAGE INTENTIONALLY BLANK.

Washington State Department of Health

THIS PAGE INTENTIONALLY BLANK.

bhc CONSULTANTS
1601 Fifth Avenue, Suite 500
Seattle, Washington 98101
p. 206.505.3400
f. 206.505.3406

April 13, 2023

Mr. Richard Rodriguez, Regional Planner
State of Washington, Department of Health (DOH)
Northwest Drinking Water Regional Operations
20425 72nd Avenue South, Suite 310
Kent, WA 98032-2388

Re: Response to DOH Comments (Letter dated January 10, 2023)
Lake Meridian Water District (ID# 41900)
Water System Plan, Submittal #22-0801

Dear Mr. Rodriguez,

This letter summarizes Lake Meridian Water District's (LMWD) responses to your comments dated January 10, 2023.

Description of Water System

1. Please provide a determination of local government consistency from the Cities of Auburn, Kent, and Covington.

   Response: Local government consistency statements for the Cities of Auburn, Kent, and Covington are included in Appendix B.

2. King County UTRC will review your Water System Plan (WSP). Please respond to their issues. Adequate responses to their issues will be necessary in order to receive a WSP Adoption Ordinance from King County.

   Response: King County UTRC comments were received on January 1, 2023. Revisions and responses to their comments were completed and are dated 04/13/2023. The UTRC comments and the District's responses are included in Appendix B. The 2023 Water Comprehensive Plan was re-submitted to King County UTRC on 04/12/2023.

3. Identify any existing Group A and Group B public water systems in the District's service area. Does the District have policies to consolidate existing systems, if requested?

   Response: There are several Group B public water systems in the District. Consolidation of these water systems by the District, either by assuming management of the system or by assuming ownership of the system, is evaluated and considered on a case-by-case basis. Consolidation is initiated by a request by the Group B water system seeking consolidation.

Basic Planning Data

4. Regarding the policies section criterion 2.3.1 Emergency Response Plan indicates an update was planned for 2021 as required by the American Water Infrastructure Act. Was this completed?

   Response: The emergency response plan was completed in 2021. The most current documents are available at the District's office upon request.

5. What is the status of the new service agreement with Auburn that reflects the switch from Auburn water to Covington water?

   Response: There is no new service agreement with City of Auburn (COA). The City and the District met in 2015, and there is no take or pay agreement set in place. The District will use the COA intertie only on an as-needed basis. District pays a standby charge for the COA intertie.

System Analysis

6. Update the Water Facilities Inventory to include the estimated non-community population, people who live outside of the District's service area.

   Response: The District has updated the water facilities inventory and submitted it to DOH on 03/27/2023.

7. Consider including discussion of the new State Advisory Levels and required Perfluoroalkyl and Polyfluoroalkyl Substances (PFAS) sampling.

   Response: Subsection 4.2.11 is added to the Water System Plan to discuss the State Advisory Levels.

8. Consider including Lead Service Line Inventory requirements here or elsewhere in the planning document.

   Response: The District does not have lead service lines in their system.

Wellhead Protection

9. Please note that the contaminant inventory is required to be updated every two years. Has the Combined Hazard Inventory in Appendix M been updated since May 2005?

   Response: The District does not have an updated Combined Hazard Inventory but they plan to update their contaminant inventory list by December 2023.

Water Quality

10. Regarding the Coliform Monitoring Plan:

    a. Update to reflect the Revised Total Coliform Rule (in effect since April 2016). Our very fine summaries are provided at this location. Revised Total Coliform Rule | Washington State Department of Health. Update sections 4.2.7 and 4.6.2 to 4.6.5.

       Response: The sections above have been updated to reflect the requirements for RTCR.

b. The RTCR eliminated the non-acute and acute violations, uses E. coli for triggering an E. coli violation, and changes public notification requirements. The following template will provide the specific language for the update. Pages 18-21 provide an E. coli response plan checklist for preparing for E. coli. Preparing a Coliform Monitoring Plan for Large or Multiple-Source Systems (wa.gov).

   Response: Chapter 4 was updated to reflect the changes in public notification requirements and the types of violations.

c. Also, Lake Meridian, 41900B, is only required to collect 20 routine coliform samples each month (not 30 samples).

   Response: Based on the recently updated Water Facilities Index, the District takes at least 25 coliform samples per month. The Routine Coliform Monitoring Plan has been updated.

Operations & Maintenance

11. Resolution 514-05-07 to adopt the cross-connection control program (CCCP) references the CCCP in exhibit A but the WSP does not appear to include exhibit A or the most recent version of the CCCP. Please include the CCCP and update if needed to ensure all the required elements in 246-290-490 are captured.

    Response: The most recent version of the Cross Connection Control Program is added to Appendix J.

12. Section 7.7.5 Annual Facility Maintenance references the valve maintenance program. Are the air vacuum valves included? If not, please consider including these types of valves in the valve maintenance program.

    Response: The District plans on completing an inventory and routine maintenance on the air vacuum valves – planned for 2023 – as a part of their existing valve maintenance program.

Financial Planning

13. We concur with the financial analysis and recommended rate increases contained in this chapter covering this 10-year planning period. We assume the District's elected officers will adopt rate increases necessary to insure continued financial viability and water utility financial capacity.

    Response: The District has conducted a financial response study for the next 10 years and is committed to raising rates and to support their capital improvement programs.

Other Documentation

14. The water system must meet the consumer input process outlined in WAC 246-290-100(8). Please include documentation of a consumer meeting discussing the WSP, prior to DOH approval of the WSP.

    Response: A public meeting to discuss the WSP was conducted on 03/23/2023. Documentation of the consumer meeting is included in Appendix C.

15. Prior to DOH approval, the District's governing body must approve and adopt the WSP.

    Response: The WSP was approved by Lake Meridian's Board of Directors on 03/23/2023. The resolution to adopt the WSP is included in Appendix C.

16. Please provide copies of any comments made by adjacent purveyors or other interested parties, along with the District's response to those comments.

    Response: Comments by adjacent purveyors are included in Appendix B.

17. Provide a signed State Environmental Policy Act (SEPA) Checklist and a SEPA threshold determination with the final WSP submittal.

    Response: The SEPA Checklist and SEPA threshold determination is included in Appendix A.

Sincerely,
BHC Consultants

Madison McCrosky, PE
Project Manager

cc: Mr. William C. Hall, General Manager, Lake Meridian Water District
Mr. Brent Lewis, Operations Manager, Lake Meridian Water District
Mr. Ron Dorn, PE, Vice President, BHC Consultants, LLC

Attachments: 2023 Water Comprehensive Plan Re-Submittal

Madison McCrosky

From: Rucksdashel, Mary A (DOH) <Mary.Rucksdashel@DOH.WA.GOV>
Sent: Tuesday, January 10, 2023 11:29 AM
To: Chris Hall; dcardwell@kingcounty.gov; Elsenboss, Carina (DOHi); Lynn.Schneider@kingcounty.gov; Wood, Doug (ECY); Ron Dorn; Madison McCrosky
Cc: Rodriguez, Richard (DOH)
Subject: Lake Meridian Water District Water System Plan Review, Project 22-0801 [Filed 27 Mar 2023 16:44]
Attachments: Lake_Meridian_WD_41900_K_20230110_22-0801_Review.pdf

Categories: Filed by Mail Manager

The review for Lake Meridian WD water system plan is attached above. Please contact Richard.rodriguez@doh.wa.gov with any questions.

NOTE: NWRO physical office has closed as of July 31, 2022. Our level of service may slow a little so please a little patience as we adjust.

www.doh.wa.gov

Madison McCrosky

From: Rodriguez, Richard (DOH) <Richard.Rodriguez@DOH.WA.GOV>
Sent: Monday, January 9, 2023 9:37 AM
To: Madison McCrosky; Chris Hall
Cc: Rucksdashel, Mary A (DOH)
Subject: RE: Water System Plan, DOH review [Filed 09 Jan 2023 09:45]

Categories: Filed by Mail Manager

Hello Madison, The review letter for the Lake Meridian WSP was sent to Chris Hall on Dec. 20, 2022: you were cc'd.

From: Madison McCrosky <Madison.McCrosky@bhcconsultants.com>
Sent: Monday, January 9, 2023 9:28 AM
To: Rodriguez, Richard (DOH) <Richard.Rodriguez@DOH.WA.GOV>; Chris Hall <chall@lakemeridianwater.com>
Subject: RE: Water System Plan, DOH review

External Email

Hello Richard:

I wanted to check in on the status of the review letter for the Lake Meridian WD Water System Plan. When do you anticipate having the comments sent over to us?

Thanks,

Madison McCrosky, PE
Project Engineer
p. 206.357.9952
d. 509.396.1200
e. Madison.McCrosky@bhcconsultants.com

From: Rodriguez, Richard (DOH) <Richard.Rodriguez@DOH.WA.GOV>
Sent: Monday, December 19, 2022 10:38 AM
To: Chris Hall <chall@lakemeridianwater.com>
Cc: Madison McCrosky <Madison.McCrosky@bhcconsultants.com>
Subject: RE: Water System Plan, DOH review [Filed 20 Dec 2022 15:33]

Thank you, will do.

Happy holidays to you!

From: Chris Hall <chall@lakemeridianwater.com>
Sent: Monday, December 19, 2022 10:19 AM
To: Rodriguez, Richard (DOH) <Richard.Rodriguez@DOH.WA.GOV>

Cc: Madison McCrosky <madison.mccrosky@bhcconsultants.com>
Subject: RE: Water System Plan, DOH review

External Email

Hello Richard,

Please send the review document to me at this e-mail address with a Cc to Madison McCrosky (Cc included) our District Engineer.

Thank you and have a great Christmas Holidays.

Chris Hall
General Manager
Lake Meridian Water District
Office (253) 631-3770
Cell (206) 793-5016

From: Rodriguez, Richard (DOH) <Richard.Rodriguez@DOH.WA.GOV>
Sent: Monday, December 19, 2022 9:20 AM
To: Chris Hall <chall@lakemeridianwater.com>
Subject: Water System Plan, DOH review

Hello Chris, we have completed the review of your water system plan.

To what email address shall I send the review document?

Thank you, Richard R

Madison McCrosky

From: Madison McCrosky
Sent: Thursday, August 4, 2022 3:48 PM
To: Rucksdashel, Mary A (DOH); Rodriguez, Richard (DOH)
Cc: Brent Lewis; Chris Hall; Ron Dorn; Kevin Garcia; tompors@comcast.net
Subject: RE: New Projects for Lake Meridian Water District - King County [Filed 04 Aug 2022 15:48]

Categories: Filed by Mail Manager

Mary and Richard,

I wanted to let you know that we had some issues with our PDF software when we tried to reduce the file size that caused some readability issues with figures included in the Comprehensive Plan Document submitted last week.

I have reuploaded the WCP to the Box folder with today's date, 8-4-2022. Please let me know if you have any issues with the document in the folder now. Thank you for your understanding.

Thanks,

Madison McCrosky, PE
Project Engineer
p. 206.357.9952
d. 509.396.1200
e. Madison.McCrosky@bhcconsultants.com

From: Rucksdashel, Mary A (DOH) <Mary.Rucksdashel@DOH.WA.GOV>
Sent: Tuesday, August 2, 2022 12:59 PM
To: Madison McCrosky <Madison.McCrosky@bhcconsultants.com>; Rodriguez, Richard (DOH) <Richard.Rodriguez@DOH.WA.GOV>
Cc: Brent Lewis <brent@lakemeridianwater.com>; Chris Hall <chall@lakemeridianwater.com>; Ron Dorn <Ron.Dorn@bhcconsultants.com>; Kevin Garcia <Kevin.Garcia@bhcconsultants.com>; tompors@comcast.net
Subject: RE: New Projects for Lake Meridian Water District - King County

Madison – I will forward the plan to Ecology.

From: Madison McCrosky <Madison.McCrosky@bhcconsultants.com>
Sent: Tuesday, August 2, 2022 12:37 PM
To: Rodriguez, Richard (DOH) <Richard.Rodriguez@DOH.WA.GOV>
Cc: Brent Lewis <brent@lakemeridianwater.com>; Chris Hall <chall@lakemeridianwater.com>; Ron Dorn <Ron.Dorn@bhcconsultants.com>; Kevin Garcia <Kevin.Garcia@bhcconsultants.com>; Rucksdashel, Mary A (DOH) <Mary.Rucksdashel@DOH.WA.GOV>; tompors@comcast.net
Subject: RE: New Projects for Lake Meridian Water District - King County

External Email

Hello Richard,

The Water Comprehensive Plans and accompanying documents have been uploaded to the Box account Mary set up. We look forward to your review.

Will DOH forward a copy of the plan to Ecology? If not, do you have the contact information for who we should send it to?

Thanks,

Madison McCrosky, PE
Project Engineer
p. 206.357.9952
d. 509.396.1200
e. Madison.McCrosky@bhcconsultants.com

From: Madison McCrosky
Sent: Monday, August 1, 2022 9:34 AM
To: 'Rodriguez, Richard (DOH)' <Richard.Rodriguez@DOH.WA.GOV>
Cc: Brent Lewis <brent@lakemeridianwater.com>; Chris Hall <chall@lakemeridianwater.com>; Ron Dorn <Ron.Dorn@bhcconsultants.com>; Kevin Garcia <Kevin.Garcia@bhcconsultants.com>; Rucksdashel, Mary A (DOH) <Mary.Rucksdashel@DOH.WA.GOV>
Subject: RE: New Projects for Lake Meridian Water District - King County

Hello Richard,

The District's 2022 Water Comprehensive Plan, DOH Form 331-149, and the WSP Pre-Planning Checklist are ready for DOH review. I sent out the PAA form last Friday and am just waiting to hear back on the Box Folder and will let you know when those documents are uploaded.

Thanks,

Madison McCrosky, PE
Project Engineer
p. 206.357.9952
d. 509.396.1200
e. Madison.McCrosky@bhcconsultants.com

From: Rodriguez, Richard (DOH) <Richard.Rodriguez@DOH.WA.GOV>
Sent: Tuesday, July 19, 2022 4:08 PM
To: Madison McCrosky <Madison.McCrosky@bhcconsultants.com>
Cc: Brent Lewis <brent@lakemeridianwater.com>; Chris Hall <chall@lakemeridianwater.com>; Ron Dorn <Ron.Dorn@bhcconsultants.com>; Kevin Garcia <Kevin.Garcia@bhcconsultants.com>; Carter, Brietta J (DOH) <brietta.carter@doh.wa.gov>; Ryding, John (DOH) <John.Ryding@DOH.WA.GOV>; Rucksdashel, Mary A (DOH) <Mary.Rucksdashel@DOH.WA.GOV>
Subject: RE: New Projects for Lake Meridian Water District - King County [Filed 19 Jul 2022 16:52]

Electronic copy only.

Thank you,

From: Madison McCrosky <Madison.McCrosky@bhcconsultants.com>
Sent: Tuesday, July 19, 2022 3:26 PM

To: Rodriguez, Richard (DOH) <Richard.Rodriguez@DOH.WA.GOV>
Cc: Brent Lewis <brent@lakemeridianwater.com>; Chris Hall <chall@lakemeridianwater.com>; Ron Dorn <Ron.Dorn@bhcconsultants.com>; Kevin Garcia <Kevin.Garcia@bhcconsultants.com>
Subject: RE: New Projects for Lake Meridian Water District - King County

External Email

Hello Richard,

I am reaching out to see if you would like a hard copy of Lake Meridian's 2022 Water System Plan for review in addition to the electronic copy? Please let us know and if so, we will make sure to provide you with a copy in a three ring binder.

Thanks,

Madison McCrosky, PE
Project Engineer
p. 206.357.9952
d. 509.396.1200
e. Madison.McCrosky@bhcconsultants.com

From: Carter, Brietta J (DOH) <brietta.carter@doh.wa.gov>
Sent: Tuesday, July 19, 2022 12:39 PM
To: Madison McCrosky <Madison.McCrosky@bhcconsultants.com>
Cc: Brent Lewis <brent@lakemeridianwater.com>; Chris Hall <chall@lakemeridianwater.com>; Ron Dorn <Ron.Dorn@bhcconsultants.com>; Ryding, John (DOH) <John.Ryding@DOH.WA.GOV>; Rodriguez, Richard (DOH) <Richard.Rodriguez@DOH.WA.GOV>
Subject: RE: New Projects for Lake Meridian Water District - King County

Hello.

We have no place to store hard copies. However, Richard may still want a hard copy to work from. Richard Rodriguez is the lead in our office for Water System Plans in King County. Please work with Richard, our planner, on this (cc'd, (253) 395-6771). We require electronic submittal via our secure Box account. Send request for the Box account link to dw.nwroprojects@doh.wa.gov.

We can leave John Ryding off the email list for this topic, moving forward.

Best,

Brietta Carter, MSE, PE
Pronouns: she/her
Regional Engineer
Office of Drinking Water
Environmental Public Health
Washington State Department of Health
Brietta.Carter@doh.wa.gov
Mobile: 564-999-3355
~~Office: 253-395-6770~~ | www.doh.wa.gov

From: Madison McCrosky <Madison.McCrosky@bhcconsultants.com>
Sent: Friday, July 15, 2022 3:25 PM
To: Carter, Brietta J (DOH) <brietta.carter@doh.wa.gov>; Ryding, John (DOH) <John.Ryding@DOH.WA.GOV>
Cc: Brent Lewis <brent@lakemeridianwater.com>; Chris Hall <chall@lakemeridianwater.com>; Ron Dorn <Ron.Dorn@bhcconsultants.com>
Subject: RE: New Projects for Lake Meridian Water District - King County

External Email

Hello Brietta,

We did find the updated submittal form 331-149 (updated January 2022) that lists electronic and one paper copy. We will proceed with electronic submission and one paper copy to the NW office unless we hear otherwise when you are back from vacation.

Thanks,

Madison McCrosky, PE
Project Engineer
p. 206.357.9952
d. 509.396.1200
e. Madison.McCrosky@bhcconsultants.com

From: Madison McCrosky
Sent: Thursday, July 14, 2022 10:53 AM
To: Carter, Brietta J (DOH) <brietta.carter@doh.wa.gov>
Cc: Brent Lewis <brent@lakemeridianwater.com>; Chris Hall <chall@lakemeridianwater.com>; Ron Dorn <Ron.Dorn@bhcconsultants.com>
Subject: RE: New Projects for Lake Meridian Water District - King County [Filed 14 Jul 2022 10:53]

Hello Brietta,

The draft of Lake Meridian Water District (SID 41900B) 2022 Comprehensive Plan will be ready for DOH review the week of July 25th. DOH Water System Plan Submittal Form 331-397-F lists submission of 3 copies (1 to be forwarded to Ecology by DOH) to the NW Drinking Water Operations office. I want to confirm that submittals will still be completed via hard copy.

Thanks,

Madison McCrosky, PE
Project Engineer
p. 206.357.9952
d. 509.396.1200
e. Madison.McCrosky@bhcconsultants.com

From: Carter, Brietta J (DOH) <brietta.carter@doh.wa.gov>
Sent: Thursday, May 5, 2022 9:07 AM
To: Madison McCrosky <Madison.McCrosky@bhcconsultants.com>
Subject: RE: New Projects for Lake Meridian Water District - King County

Hi Madison,

New reservoir projects and new PRV/BPS projects require a project report (WAC 246-290-110) and construction documents (WAC 246-290-120) for review and approval prior to construction. A new PRV project isn't required for review. However, we would like to see any large scale pressure zone reconfiguration project.

I'm looking forward to reviewing the plan update!

Sincerely,

Brietta Carter, MSE, PE
Pronouns: she/her
Regional Engineer
Office of Drinking Water
Environmental Public Health
Washington State Department of Health
Brietta.Carter@doh.wa.gov
Mobile: 564-999-3355
Office: 253-395-6770 | www.doh.wa.gov

From: Madison McCrosky <Madison.McCrosky@bhcconsultants.com>
Sent: Wednesday, May 4, 2022 3:28 PM
To: Carter, Brietta J (DOH) <brietta.carter@doh.wa.gov>
Subject: New Projects for Lake Meridian Water District - King County

External Email

Hello Brietta,

I am working on planning out the engineering design for Lake Meridian Water District's new pressure zone which includes: new 3.0 MG reservoir, a new prv station, and a new PRV/BPS (booster pump station will only be used if source for zone is offline). The new reservoir will address storage deficiencies for the system as identified in the Water System Plan, which is currently in the draft stage. Assuming that the WSP is approved before we go to bid on this project (anticipated to start construction in late 2024). Will DOH require a project report for any of these projects?

Thank you,

Madison McCrosky, PE
Project Engineer
p. 206.357.9952

d. 509.396.1200
e. Madison.McCrosky@bhcconsultants.com

1601 Fifth Avenue Suite 500
Seattle, Washington 98101
www.bhcconsultants.com

We're hiring! Visit our careers page here.

Offices in Seattle, Tacoma, and Bellingham.

This email and all attachments are confidential. For further information about emails sent to or from BHC Consultants or if you have received this email in error, please refer to http://bhcconsultants.com/disclaimer/

STATE OF WASHINGTON
DEPARTMENT OF HEALTH
NORTHWEST DRINKING WATER REGIONAL OPERATIONS
PO BOX 47800, M/S: K17-12, OLYMPIA WA 98504

January 10, 2023

William (Chris) Hall
chall@lakemeridianwater.com

Subject: Lake Meridian Water District, ID #41900
King County
Water System Plan
Submittal #22-0801

Dear Chris Hall:

Thank you for submitting the Water System Plan (WSP) for the Lake Meridian Water District (the District) received in this office on August 2, 2022. We have reviewed the plan and offer the following comments. These comments must be adequately addressed prior to approval of the WSP.

Description of Water System

1. Please provide a determination of local government consistency from the Cities of Auburn, Kent, and Covington.
2. King County UTRC will review your WSP. Please respond to their issues. Adequate responses to their issues will be necessary in order to receive a WSP Adoption Ordinance from King County.
3. Identify any existing Group A and Group B public water systems in the District's service area. Does the District have policies to consolidate existing systems, if requested?

Basic Planning Data

4. Regarding the policies section criterion 2.3.1 Emergency Response Plan indicates an update was planned for 2021 as required by the American Water Infrastructure Act. Was this completed?
5. What is the status of the new service agreement with Auburn that reflects the switch from Auburn water to Covington water?

System Analysis

6. Update the Water Facilities Inventory to include the estimated non-community population, people who live outside of the District's service area.
7. Consider including discussion of the new State Advisory Levels and required Perfluoroalkyl and Polyflouoroalkyl Substances (PFAS) sampling.

8. Consider including Lead Service Line Inventory requirements here or elsewhere in the planning document.

Water Use Efficiency Program (WUE) and Water Rights Assessment

No comment.

Wellhead Protection

9. Please note that the contaminant inventory is required to be updated every two years. Has the Combined Hazard Inventory in Appendix M been updated since May 2005?

Water Quality

10. Regarding the Coliform Monitoring Plan:
    a. Update to reflect the Revised Total Coliform Rule (in effect since April 2016). Our very fine summaries are provided at this location. Revised Total Coliform Rule | Washington State Department of Health. Update sections 4.2.7 and 4.6.2 to 4.6.5.
    b. The RTCR eliminated the non-acute and acute violations, uses *E.coli* for triggering an *E.coli* violation, and changes public notification requirements. The following template will provide the specific language for the update. Pages 18-21 provide an *E.coli* response plan checklist for preparing for *E.coli*. Preparing a Coliform Monitoring Plan for Large or Multiple-Source Systems (wa.gov)
    c. Also, Lake Meridian, 41900B, is only required to collect 20 routine coliform samples each month (not 30 samples).
    d. Additional resource: Coliform Information Packet | Washington State Department of Health

Operations & Maintenance

11. The resolution 514-05-07 to adopt the cross-connection control program (CCCP) references the CCCP in exhibit A but the WSP does not appear to include exhibit A or the most recent version of the CCCP. Please include the CCCP and update if needed to ensure all the required elements in 246-290-490 are captured.
12. Section 7.7.5 Annual Facility Maintenance references the valve maintenance program. Are the air vacuum valves included? If not, please consider including these types of valves in the valve maintenance program.

Distribution Facilities Design and Construction Standards

No comment.

Improvement Program

No comment.

Financial Planning

13. We concur with the financial analysis and recommended rate increases contained in this chapter covering this 10 year planning period. We assume the District's elected officers will adopt rate increases necessary to insure continued financial viability and water utility financial capacity.

Other Documentation

14. The water system must meet the consumer input process outlined in WAC 246-290-100(8). Please include documentation of a consumer meeting discussing the WSP, prior to DOH approval of the WSP.
15. Prior to DOH approval, the District's governing body must approve and adopt the WSP.
16. Please provide copies of any comments made by adjacent purveyors or other interested parties, along with the District's response to those comments.
17. Provide a signed SEPA Checklist and a SEPA threshold determination with the final WSP submittal.

Closing

We hope that you have found these comments to be clear, constructive and helpful in the development of your final draft WSP. We ask that you submit the revised WSP on or before **March 20, 2020.** In order to expedite the review of your revised submittal, please include a cover letter summarizing how each of the above comments was addressed in the revised WSP and where each response is located (i.e., page numbers, Appendices, etc.)

Regulations establishing a schedule for fees for review of planning, engineering and construction documents have been adopted (WAC 246-290-990). Please note that we have included an invoice in the amount of **$3,705.00** for the review of the Water System Plan. This fee covers our cost for review of the initial submittal, plus the review of one revised document. Please remit your complete payment in the form of a check or money order within thirty days of the date of this letter to: **DOH, Revenue Section, and P.O. Box 1099, Olympia, WA 98507-1099.**

Thank you again for submitting your revised Water System Plan for our review. If you have any comments or questions concerning our review, please contact me at (253) 395-6771.

Sincerely,

Richard Rodriguez
Regional Planner
(253) 395-6771

Brietta Carter, PE
Regional Engineer
(564) 999-3355

Enclosure (invoice)
ecc:
Dan Cardwell, KC UTRC, dcardwell@kingcounty.gov
Carina Elsenboss, Public Health – Seattle & King County, Carina.Elsenboss@kingcounty.gov
Lynn Schneider, Public Health – Seattle & King County, Lynn.Schneider@kingcounty.gov
Doug Wood, WSDOE – NWRO, dwoo461@ecy.wa.gov
Ron Dorn, P.E., BHC Consultants
Madison McCrosky, P.E., BHC Consultants, LLC, Madison.McCrosky@bhcconsultants.com

STATE OF WASHINGTON
Department of Health
OFFICE OF DRINKING WATER
Project And Plan Review

INVOICE

CHRIS HALL
LAKE MERIDIAN WATER DISTRICT
27224 144TH AVE SE
KENT, WA 98042

WS ID: 41900
Invoice No: 50488
Invoice Date: 01/10/2023
Due Date: 02/09/2023

WS NAME: Lake Meridian Water District

PROJECT AND PLAN REVIEW SUBMITAL#: 22-0801

DESCRIPTION	QTY	COST	AMOUNT
Water System Plan	1	x $3705.00	$3705.00
		Total Amount Due	**$3705.00**

Comments: Water System Plan for Lake Meridian Water District.

1. ***Pay online*** with a credit card, debit card, or electronic check (ACH) using the Environmental Health Payment System at https://secureaccess.wa.gov/.
2. For billing questions, please contact Northwest Drinking Water Regional Operations at (253) 395-6750 or via email DW.NWRO.WSProjects@doh.wa.gov.
3. This invoice is issued in accordance with WAC 246-290-990(3)(c)(iii).
4. For persons with disabilities, this document is available on request in other formats. To submit a request, please call 711 Washington Relay Service.
5. If paying by check:

   Make checks payable to Department of Health, Federal ID #91-1444603.

Please return the bottom portion of this invoice with your check.

Invoice Number: 50488
Invoice Amount: $3705.00
Owner Number: 003018
WS Name: Lake Meridian Water District

Invoice Date: 01/10/2023
Invoice Due Date: 02/09/2023
Region: NW
WS ID: 41900

Reference: PROJECT AND PLAN REVIEW FEES

Please remit to:
ACCOUNTS RECEIVABLE
DOH PROJECT AND PLAN REVIEW FEES
PO BOX 1099
OLYMPIA, WA 98507-1099

5DWA10597240100 PP00041900X02092300370500

THIS PAGE INTENTIONALLY BLANK.

King County

THIS PAGE INTENTIONALLY BLANK.

1601 Fifth Avenue, Suite 500
Seattle, Washington 98101

p. 206.505.3400
f. 206.505.3406

April 13, 2023

Dan Cardwell, Principal Planner
King Count Utility Technical Review Committee (UTRC)
King County Department of Local Services
919 SW Grady Way, Suite 300
Renton, WA 98057

Re: Response to UTRC Comments (Letter dated January 10, 2023)
Lake Meridian Water District
2022 Water System Plan

Dear Mr. Cardwell,

This letter summarizes Lake Meridian Water District's (LMWD) responses to your comments dated January 10, 2023.

1. **Figure 2-1: The Retail Water Service Area extends outside of the District Boundary in several places, and conversely, the District Boundary extends beyond the RWSA in others. Is there any plan to rectify the boundaries both internally and with adjacent purveyors more efficiently administer the area?**

   Response: The District is in communication with all adjacent purveyors and adjusts the Water Service Area boundaries as needed to administer the area.

2. **Policy 1.12 – Wholesaling of Water "The District would pursue these agreements the District is in a position to provide wholesale water." This is an incomplete sentence.**

   Response: The sentence was revised to form a complete sentence and to provide information regarding the District's wholesale agreement with Covington Water District.

3. **King County Comprehensive Plan Policies (F-243, et seq) requires a consideration of climate change analysis during water supply planning. There is no such analysis within the plan. Has the District considered the impacts of climate change on both water demand and supply?**

   Response: Considerations of climate change's impacts to future water supply and usage is included in Section 2.11.5 of the WSP.

Sincerely,
BHC Consultants

Madison McCrosky, PE
Project Manager

cc: Mr. William C. Hall, General Manager, Lake Meridian Water District
Mr. Brent Lewis, Operations Manager, Lake Meridian Water District
Mr. Ron Dorn, PE, Vice President, BHC Consultants, LLC

Attachment: 2023 Water Comprehensive Plan Re-Submittal

Kevin Garcia

From: Hill, Jae <jhill@kingcounty.gov>
Sent: Monday, August 15, 2022 7:54 PM
To: Madison McCrosky
Cc: Ron Dorn; Kevin Garcia; Brent Lewis; Chris Hall
Subject: RE: Lake Meridian Water District 2022 Water Comprehensive Plan - KC UTRC Review [Filed 18 Aug 2022 09:00]
Attachments: Lake Meridian Draft 2022-0817.pdf; UTRC Agenda 2022-0817.pdf

Categories: Filed by Mail Manager

Hi Madison,

Attached are the agenda for the UTRC meeting on Wednesday and the draft review letter. Note that there can be additions and subtractions to the letter based on the UTRC deliberation at the meeting.

Please let me know if you have any questions, and please forward this invite to anyone who needs it on your end.

Cheers,

Jae Hill, AICP, CFM
Principal Planner | Utilities Technical Review Committee
King County Dept. of Local Services
jhill@kingcounty.gov
o: 206-263-5690 | m: 206-485-6499

DLS Staff are working remotely. Permitting services will continue to be online and available on the Permitting website and MyBuildingPermit.com.

From: Madison McCrosky <Madison.McCrosky@bhcconsultants.com>
Sent: Thursday, August 4, 2022 4:00 PM
To: Hill, Jae <jhill@kingcounty.gov>
Cc: Ron Dorn <Ron.Dorn@bhcconsultants.com>; Kevin Garcia <Kevin.Garcia@bhcconsultants.com>; Brent Lewis <brent@lakemeridianwater.com>; Chris Hall <chall@lakemeridianwater.com>
Subject: RE: Lake Meridian Water District 2022 Water Comprehensive Plan - KC UTRC Review

[EXTERNAL Email Notice!] External communication is important to us. Be cautious of phishing attempts. Do not click or open suspicious links or attachments.

Hello Jae:

Thank you for confirming receipt of the plan.

I wanted to let you know that we had some issues with our PDF software when we tried to reduce the file size that caused some readability issues with figures included in the Comprehensive Plan Document submitted last week.

I have reuploaded the WCP to the SharePoint with today's date, 8-4-2022. The only change was corrections to the readability of the figures. Please let me know if you have any issues with the document in the folder now. Thank you for your understanding.

Thanks,

Madison McCrosky, PE
Project Engineer
p. 206.357.9952
d. 509.396.1200
e. Madison.McCrosky@bhcconsultants.com

From: Hill, Jae <jhill@kingcounty.gov>
Sent: Monday, August 1, 2022 11:40 AM
To: Madison McCrosky <Madison.McCrosky@bhcconsultants.com>
Cc: Ron Dorn <Ron.Dorn@bhcconsultants.com>; Kevin Garcia <Kevin.Garcia@bhcconsultants.com>; Brent Lewis <brent@lakemeridianwater.com>; Chris Hall <chall@lakemeridianwater.com>
Subject: RE: Lake Meridian Water District 2022 Water Comprehensive Plan - KC UTRC Review

I have received your plan and will endeavor to get it on the August 17th UTRC meeting for comment. I'll let you know for certain when it's been scheduled.

Regards,

Jae Hill, AICP, CFM
Principal Planner | Utilities Technical Review Committee
King County Dept. of Local Services
jhill@kingcounty.gov
o: 206-263-5690 | m: 206-485-6499

DLS Staff are working remotely. Permitting services will continue to be online and available on the Permitting website and MyBuildingPermit.com.

From: Madison McCrosky <Madison.McCrosky@bhcconsultants.com>
Sent: Friday, July 29, 2022 4:15 PM
To: Hill, Jae <jhill@kingcounty.gov>
Cc: Ron Dorn <Ron.Dorn@bhcconsultants.com>; Kevin Garcia <Kevin.Garcia@bhcconsultants.com>; Brent Lewis <brent@lakemeridianwater.com>; Chris Hall <chall@lakemeridianwater.com>
Subject: RE: Lake Meridian Water District 2022 Water Comprehensive Plan - KC UTRC Review

[EXTERNAL Email Notice!] External communication is important to us. Be cautious of phishing attempts. Do not click or open suspicious links or attachments.

Dear Mr. Hill:

On behalf of Lake Meridian Water District, BHC Consultants, LLC is transmitting a copy of the draft *Lake Meridian Water District Comprehensive Plan*, dated July 2022 through the following SharePoint link: LMWD 2022 Water Comprehensive Plan – KC UTRC Review
We request that you conduct your review and respond to us with any comments within 90 days.

If you have any questions or wish to discuss further, please don't hesitate to contact Chris Hall (Lake Meridian Water District General Manager) at (253) 631-3770 or chall@lakemeridianwater.com or me at (206) 357-9952 or Madison.McCrosky@bhcconsultants.com.

Sincerely,

Madison McCrosky, PE
Project Manager
p. 206.357.9952
d. 509.396.1200
e. Madison.McCrosky@bhcconsultants.com

From: Hill, Jae <jhill@kingcounty.gov>
Sent: Monday, July 25, 2022 11:39 AM
To: Madison McCrosky <Madison.McCrosky@bhcconsultants.com>
Cc: Ron Dorn <Ron.Dorn@bhcconsultants.com>; Kevin Garcia <Kevin.Garcia@bhcconsultants.com>
Subject: RE: Lake Meridian Water District 2022 Water Comprehensive Plan [Filed 26 Jul 2022 09:45]

Hello Madison,

We aren't accepting hard copy plans at this time. A digital submission will suffice. Please provide a sharepoint or other FTP link for us to download the documents.

Thanks,

Jae Hill, AICP, CFM
Principal Planner | Utilities Technical Review Committee
King County Dept. of Local Services
jhill@kingcounty.gov
o: 206-263-5690 | m: 206-485-6499

DLS Staff are working remotely. Permitting services will continue to be online and available on the Permitting website and MyBuildingPermit.com.

From: Madison McCrosky <Madison.McCrosky@bhcconsultants.com>
Sent: Tuesday, July 19, 2022 4:16 PM
To: Hill, Jae <jhill@kingcounty.gov>
Cc: Ron Dorn <Ron.Dorn@bhcconsultants.com>; Kevin Garcia <Kevin.Garcia@bhcconsultants.com>
Subject: Lake Meridian Water District 2022 Water Comprehensive Plan

[EXTERNAL Email Notice!] External communication is important to us. Be cautious of phishing attempts. Do not click or open suspicious links or attachments.

Hello Jae,

BHC Consultants is working on finalizing the Lake Meridian Water District's 2022 Water Comprehensive plan for review by the King County UTRC. We will provide two draft plans (SEPA included as an appendix) to the address listed below.

Jae Hill UTRC Chair, 201 S. Jackson Street, Suite 500, KSC-NR-0512, Seattle, WA 98104-3855.

For the electronic copy, can we provide a SharePoint link or does the county have its own electronic file submission process?

Thank you,

Madison McCrosky, PE
Project Engineer
p. 206.357.9952

d. 509.396.1200
e. Madison.McCrosky@bhcconsultants.com

1601 Fifth Avenue Suite 500
Seattle, Washington 98101
www.bhcconsultants.com

We're hiring! Visit our careers page here.

Offices in Seattle, Tacoma, and Bellingham.

This email and all attachments are confidential. For further information about emails sent to or from BHC Consultants or if you have received this email in error, please refer to http://bhcconsultants.com/disclaimer/

King County
Utilities Technical Review Committee
Department of Local Services
201 S Jackson Street
KSC-LS-0815
Seattle, WA 98104
www.kingcounty.gov

Lake Meridian Water District, 2022 Water Comprehensive Plan

Lake Meridian Water District has submitted a new Water System Comprehensive Plan ("Plan") for review by the King County Utilities Technical Review Committee (UTRC). The District's Service Area is surrounded by the City of Kent to the west, Covington Water District to the east, Soos Creek Water and Sewer to the north, and the City of Auburn to the south. The District has a groundwater portfolio but predominantly purchases their water from Kent. The District is represented by engineers at BHC.

Staff has reviewed the Plan for local statutory requirements and impacts on service to residents in the unincorporated county.

On August 17, 2022, the UTRC held a meeting to review the plan and provide comments to the applicant. The UTRC requests the following changes and/or clarifications:

- Figure 2-1: The Retail Water Service Area extends outside of the District Boundary in several places, and conversely, the District Boundary extends beyond the RWSA in others. Is there any plan to rectify the boundaries both internally and with adjacent purveyors to more efficiently administer the area?

- Policy 1.12 – Wholesaling of Water "The District would pursue these agreements the District is in a position to provide wholesale water." This is an incomplete sentence.

- King County Comprehensive Plan Policies (F-243, et seq) requires a consideration of climate change analysis during water supply planning. There is no such analysis within the plan. Has the District considered the impacts of climate change on both water demand and supply?

The King County Utilities Technical Review Committee thanks you for the opportunity to review and comment.

Dan Cardwell 1/10/2023

Dan Cardwell, Chair of the King County Utility Technical Review Committee Date

Washington State Department of Ecology

THIS PAGE INTENTIONALLY BLANK.

Madison McCrosky

From: Chris Hall <chall@lakemeridianwater.com>
Sent: Monday, November 7, 2022 11:39 AM
To: Madison McCrosky
Cc: Curtis Chambers; 'tompors@comcast.net'; Brent Lewis
Subject: FW: Department of Ecology- Lake Meridian Water District Water System Plan Comment Letter [Filed 07 Nov 2022 11:40]
Attachments: Lake Meridian Comment Letter November 2022.pdf

Categories: Filed by Mail Manager

Maddy,

Please see the e-mail and attachment I received today from the Department of Ecology regarding our Water Comp Plan.

Thank you,

Chris Hall
General Manager
Lake Meridian Water District
Office (253) 631-3770
Cell (206) 793-5016

From: Conner, Kevin (ECY) <keco461@ECY.WA.GOV>
Sent: Monday, November 7, 2022 10:46 AM
To: Chris Hall <chall@lakemeridianwater.com>
Cc: Wood, Doug (ECY) <DWOO461@ECY.WA.GOV>; Rodriguez, Richard (DOH) <Richard.Rodriguez@DOH.WA.GOV>
Subject: Department of Ecology- Lake Meridian Water District Water System Plan Comment Letter

Hello William,

I hope this email finds you well. Please see the attached Department of Ecology comment letter for the Lake Meridian Water District Water System Plan. If you have any questions please contact Doug Wood by phone at (206) 594-0196 or by email at Doug.Wood@ecy.wa.gov.

Thank you,

Kevin Conner (he/him) | Administrative Assistant
Washington Department of Ecology
Water Resources Program | Northwest Region Office
PO Box 330316 | Shoreline, WA 98133-9716 (**New Mailing Address**)
Desk Phone: (206) 594-0194 | www.ecology.wa.gov
24-hour reception line: 206-594-0000

STATE OF WASHINGTON
DEPARTMENT OF ECOLOGY
Northwest Region Office
PO Box 330316, Shoreline, WA 98133-9716 • 206-594-0000

November 7, 2022

Lake Meridian Water District
c/o William C. Hall
27224 144TH AVE SE
Kent, WA 98042
chall@lakemeridianwater.com

RE: Lake Meridian Water District (Water System ID 41900B)
2022 Water System Plan Comment Letter

Dear William C. Hall:

Thank you for the opportunity to review the Lake Meridian Water District Water System Plan (WSP), dated July 2022, and received on August 4, 2022. Consistent with the Memorandum of Understanding between the Department of Health (DOH) and Department of Ecology (Ecology), regarding joint review and approval of WSPs, this letter is being sent to your office with Ecology's comments. Specific elements of the WSP review included the Water Rights Self-Assessment as well as additional water rights documentation, including Ecology's water right files and previous Lake Meridian Water District (LMWD) WSPs and project reports, as applicable.

Ecology finds that the WSP is consistent with records in our possession.

General Information

Water Right Summary

In preparing this comment letter, Ecology reviewed specific elements of LMWD WSP, including the Water Right Self-Assessment (Appendix L), as well as additional water rights documentation in Ecology's records.

Please see Table 1 below for a comprehensive list of LMWD water rights and their respective relationships and limitations as documented through Ecology records. The water rights summarized here ***agree*** with the LMWD Water Right Self-Assessment (Appendix L), and with what is presented in Sections 6.3 and 6.5 of the WSP, dated July 2022.

Ecology notes that while the Certificate and Permit for G1-24568 state that the Qa of 728 ac-ft/yr is supplemental (non-additive). Ecology in a letter dated June 9, 1995 acknowledged that this was an error based on a miscalculation when the Report of Examination was prepared. The 1996 Stipulation and Agreed Order of Dismissal (1996 Dismissal) that settled the appeal of Ecology's

January 8, 1996 denial of three water right permit applications (G1-25263, G1-25374, and G1-26086) correctly sums up the system portfolio as 1,925 gpm and 2,204 ac-ft/yr

Table 1. Existing Water Rights (per Ecology Records)

Water Right	Priority Date	Source Name	Instantaneous Rate (gpm)		Annual Quantity (ac-ft/yr)	
			Additive	Non-Additive	Additive	Non-Additive
G1-23817	04/01/1981	Wells 1 & 2	300		374	
G1-24299	04/05/1983	Well 5a	275		308	
G1-24301	04/05/1983	Well 4	300		336	
G1-24302	04/05/1983	Well 3	400		448	
G1-24568	10/19/1984	Well 6	650		728	
G1-25374	01/03/1989	Well 9		800		960
		TOTALS:	1,925		2,204	

gpm = Gallons per Minute; ac-ft/yr = Acre-feet per Year

Future Demand

Based on the information provided in the Water Rights Self-Assessment (Appendix L), and in Section 6.3 and 6.5 of the WSP, dated July 2022, capacity **DOES NOT** appear to be an issue.

Service Area

RCW 90.03.386(2) requires that water systems be in compliance with the terms of their WSP and that any alteration of the place of use not be inconsistent with any comprehensive plans or development regulations. An evaluation of any such change should be undertaken if a future expansion of the LMWD service area is planned.

Please contact me with any questions you may have by phone at (206) 594-0196 or by email at Doug.Wood@ecy.wa.gov.

Sincerely,

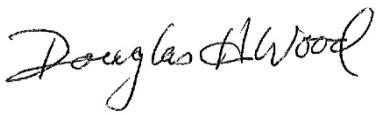

Douglas H. Wood, M.Sc., P.Geo., LHG
Water Resources Program

ecc: Richard Rodriguez, Department of Health

THIS PAGE INTENTIONALLY BLANK.

City of Auburn

THIS PAGE INTENTIONALLY BLANK.

Kevin Garcia

From: Madison McCrosky
Sent: Tuesday, September 27, 2022 5:16 PM
To: Senait Gebreeyesus; Josh Flanders; Ryan Vondrak
Cc: Ron Dorn; Kevin Garcia
Subject: RE: Lake Meridian Water District - 2022 Water Comprehensive Plan - City of Auburn Review [Filed 23 Nov 2022 08:19]
Attachments: Lake Meridian 2022 WSP_City of Auburn Comments.pdf

Categories: Filed by Mail Manager

Hello Senait,

Thank you for your review comments and for providing the completed Local Government Consistency Determination Form. We will revise the comp plan to address the comments provided.

Thank you,

Madison McCrosky, PE
Project Manager
p. 206.357.9952
d. 509.396.1200
e. Madison.McCrosky@bhcconsultants.com

From: Senait Gebreeyesus <SGebreeyesus@auburnwa.gov>
Sent: Tuesday, September 27, 2022 5:10 PM
To: Madison McCrosky <Madison.McCrosky@bhcconsultants.com>; Josh Flanders <jflanders@auburnwa.gov>; Ryan Vondrak <rvondrak@auburnwa.gov>
Subject: RE: Lake Meridian Water District - 2022 Water Comprehensive Plan - City of Auburn Review

Hi Madison,

Thank you for the opportunity to review the 2022 Lake Meridian Water Comprehensive plan. Congratulations on completing a well-written comp plan. Attached, please find City of Auburn's comments, including the Local Government Consistency Determination Form.

Please let me know if you have questions or if I can provide additional information,

Thank you,

Senait M. Gebreeyesus
Water Utility Engineer I City of Auburn
Public Works Department
Tel: 253.804.5061 (Direct) I sgebreeyesus@auburnwa.gov

From: Madison McCrosky <Madison.McCrosky@bhcconsultants.com>
Sent: Thursday, August 4, 2022 4:15 PM
To: Josh Flanders <jflanders@auburnwa.gov>; Senait Gebreeyesus <SGebreeyesus@auburnwa.gov>; Ryan Vondrak

<rvondrak@auburnwa.gov>
Subject: RE: Lake Meridian Water District - 2022 Water Comprehensive Plan - City of Auburn Review

CAUTION: The following message originated from outside the City of Auburn. Be careful opening links and attachments

---

Josh, thank you for sending over this contact information.

Thanks,

Madison McCrosky, PE
Project Engineer
p. 206.357.9952
d. 509.396.1200
e. Madison.McCrosky@bhcconsultants.com

From: Josh Flanders <jflanders@auburnwa.gov>
Sent: Thursday, August 4, 2022 4:14 PM
To: Senait Gebreeyesus <SGebreeyesus@auburnwa.gov>; Ryan Vondrak <rvondrak@auburnwa.gov>
Cc: Madison McCrosky <Madison.McCrosky@bhcconsultants.com>
Subject: Fwd: Lake Meridian Water District - 2022 Water Comprehensive Plan - City of Auburn Review

Ryan and Senait, please see text below.
Madison, these will be your contacts for the future.
Senait is our new water utility engineer. Ryan is our utility engineer manager.

Thank you

Sent from my iPhone

Begin forwarded message:

> **From:** Madison McCrosky <Madison.McCrosky@bhcconsultants.com>
> **Date:** August 4, 2022 at 4:10:23 PM PDT
> **To:** Josh Flanders <jflanders@auburnwa.gov>
> **Cc:** Chris Hall <chall@lakemeridianwater.com>, Brent Lewis <brent@lakemeridianwater.com>, Ron Dorn <Ron.Dorn@bhcconsultants.com>, Kevin Garcia <Kevin.Garcia@bhcconsultants.com>
> **Subject: RE: Lake Meridian Water District - 2022 Water Comprehensive Plan - City of Auburn Review**

CAUTION: The following message originated from outside the City of Auburn. Be careful opening links and attachments

Hello Josh,

I wanted to let you know that we had some issues with our PDF software when we tried to reduce the file size that caused some readability issues with figures included in the Comprehensive Plan Document submitted last week.

I have reuploaded the WCP to the SharePoint with today's date, 8-4-2022. The only change was corrections to the readability of the figures. The previous file has been deleted. Please let me know if you have any issues with the document in the folder now. Thank you for your understanding.

Thanks,

Madison McCrosky, PE
Project Manager
p. 206.357.9952
d. 509.396.1200
e. Madison.McCrosky@bhcconsultants.com

From: Madison McCrosky
Sent: Friday, July 29, 2022 4:15 PM
To: Josh Flanders <jflanders@auburnwa.gov>
Cc: Chris Hall <chall@lakemeridianwater.com>; Brent Lewis <brent@lakemeridianwater.com>; Ron Dorn <Ron.Dorn@bhcconsultants.com>; Kevin Garcia <Kevin.Garcia@bhcconsultants.com>
Subject: Lake Meridian Water District - 2022 Water Comprehensive Plan - City of Auburn Review [Filed 29 Jul 2022 16:15]

Dear Mr. Flanders:

On behalf of Lake Meridian Water District, BHC Consultants, LLC is transmitting a copy of the draft *Lake Meridian Water District Comprehensive Plan*, dated July 2022, and a copy of the partially completed DOH Form 331-568 (Local Government Consistency Determination Form) through the following SharePoint link: LMWD 2022 Water Comprehensive Plan
We request that you conduct your review and respond to us with any comments within 60 days.

If you have any questions or wish to discuss further, please don't hesitate to contact Chris Hall (Lake Meridian Water District General Manager) at (253) 631-3770 or chall@lakemeridianwater.com or me at (206) 357-9952 or Madison.McCrosky@bhcconsultants.com.

Sincerely,
Madison McCrosky, PE
Project Manager
p. 206.357.9952
d. 509.396.1200
e. Madison.McCrosky@bhcconsultants.com

bhc CONSULTANTS

1601 Fifth Avenue Suite 500

Seattle, Washington 98101
www.bhcconsultants.com

We're hiring! Visit our careers page here.

Offices in Seattle, Tacoma, and Bellingham.

This email and all attachments are confidential. For further information about emails sent to or from BHC Consultants or if you have received this email in error, please refer to http://bhcconsultants.com/disclaimer/

The information contained in this electronic communication is personal, privileged and/or confidential information intended only for the use of the individual(s) or entity(ies) to which it has been addressed. If you read this communication and are not the intended recipient, you are hereby notified that any dissemination, distribution or copying of this communication, other than delivery to the intended recipient is strictly prohibited. If you have received this communication in error, please immediately notify the sender by reply e-mail. Thank you.
The information contained in this electronic communication is personal, privileged and/or confidential information intended only for the use of the individual(s) or entity(ies) to which it has been addressed. If you read this communication and are not the intended recipient, you are hereby notified that any dissemination, distribution or copying of this communication, other than delivery to the intended recipient is strictly prohibited. If you have received this communication in error, please immediately notify the sender by reply e-mail. Thank you.

CITY OF AUBURN WASHINGTON

Nancy Backus, Mayor

25 West Main Street ✶ Auburn WA 98001-4998 ✶ www.auburnwa.gov ✶ 253-931-3000

September 27, 2022

Madison McCrosky, PE, Project Manager
BHC Consultants
1601 Fifth Avenue, Suite 500
Seattle WA 98101

RE: Lake Meridian Water District 2022 Water System Plan – Review Comments

Dear Madison McCrosky:

Thank you for the opportunity to review the Lake Meridian 2022 Water System Plan. The City of Auburn has the following comments and clarifications:

Chapter 1 – Water System Description, Adjacent Purveyors and Interties, Table 1-5 (page 1-19).
"…132nd Avenue SE and SE 304th Street – Emergency Supply two-way…."
Comment: The emergency supply should be wholesale supply to the district on an as needed basis per the First Amendment to Interlocal Agreement #2.

Chapter 1 – Water System Description, Adjacent Purveyors and Interties, City of Auburn (Interlocal Agreement No. 1 and Interlocal Agreements No.2) - (page 1-20).
"The District discontinued regular purchase of water from the City of Auburn in 2017, and instead switched their primary supply to Covington Water District. The intertie with Auburn is maintained as emergency supply."
Clarification: The district may be using this supply for emergency needs but the First Amendment to the Interlocal Agreement #2 identifies this supply as wholesale.

Chapter 1 – Water System Description, Adjacent Purveyors and Interties, Related Plans (page 1-22).
"The City of Auburn has a Water Comprehensive Plan that was adopted in 2012 with a draft 2015 Water Comprehensive Plan under Agency Review."
Comment: 2015 WSP has been adopted, and the City is currently drafting the 2024 WSP plan.

Chapter 1 – Water System Description, Adjacent Purveyors and Interties, Related Plans (page 1-22).
"The City maintains wholesale supply interties with adjacent water systems: the City of Algona, Covington Water District, King County Water District No. 111, the Muckleshoot Indian Tribe, and the Indian Health Service."
Clarification: The water served to the Muckleshoot Indian Tribe (MIT) through the City's water systems are not connected by intertie. The City serves some MIT customers outside of the city who reside on reservation land.

Chapter 6 – Water Rights, Supply Analysis and Source Water Protection (page 6-1).
"The District currently receives water from District wells and from the City of Auburn, under the provisions of Interlocal Agreements."
Clarification: The district currently receives water from City of Auburn on an as needed basis.

Please contact me at 253-804-5061, or sgebreeyesus@uburnwa.gov if you have any questions.

Sincerely,

Senait Gebreeyesus 09/27/2022

Senait Gebreeyesus
Water Utility Engineer
Public Works Department

SG/mm

Enclosure(s)
Local Government Consistency Determination Form

cc: Senait Gebreeyesus, Water Utilities Engineer
Ryan Vondrak, Utilities Engineering Manager
File: WTR 8.0
Electronic Distribution

Local Government Consistency Determination Form

Water System Name: LAKE MERIDIAN WATER DISTRICT PWS ID: 41900B

Planning/Engineering Document Title: 2022 WATER COMPREHENSIVE PLAN Plan Date: 07/29/2022

Local Government with Jurisdiction Conducting Review: City of Auburn

Before the Department of Health (DOH) approves a planning or engineering submittal under Section 100 or Section 110, the local government must review the documentation the municipal water supplier provides to prove the submittal is consistent with **local comprehensive plans, land use plans and development regulations** (WAC 246-290-108). Submittals under Section 105 require a local consistency determination if the municipal water supplier requests a water right place-of-use expansion. The review must address the elements identified below as they relate to water service.

By signing this form, the local government reviewer confirms the document under review is consistent with applicable local plans and regulations. If the local government reviewer identifies an inconsistency, he or she should include the citation from the applicable comprehensive plan or development regulation and explain how to resolve the inconsistency, or confirm that the inconsistency is not applicable by marking N/A. See more instructions on reverse.

	For use by water system	For use by local government
Local Government Consistency Statement	**Identify the page(s) in submittal**	**Yes or Not Applicable**
a) The water system service area is consistent with the adopted land use and zoning within the service area.	2-1 TO 2-3	Yes
b) The growth projection used to forecast water demand is consistent with the adopted city or county's population growth projections. If a different growth projection is used, provide an explanation of the alternative growth projection and methodology.	2-5 TO 2-6	Yes
c) For cities and towns that provide water service: All water service area policies of the city or town described in the plan conform to all relevant utility service extension ordinances.	3-2 TO 3-4	Yes
d) Service area policies for new service connections conform to the adopted local plans and adopted development regulations of all cities and counties with jurisdiction over the service area.	3-4 TO 3-5	Yes
e) Other relevant elements related to water supply are addressed in the water system plan, if applicable. This may include Coordinated Water System Plans, Regional Wastewater Plans, Reclaimed Water Plans, Groundwater Management Area Plans, and the Capital Facilities Element of local comprehensive plans.	3-14	Yes

I certify that the above statements are true to the best of my knowledge and that these specific elements are consistent with adopted local plans and development regulations.

Senait Gebreeyesus 09/27/2022

Signature

9/23/2022

Date

Senait Gebreeyesus, Water Utility Engineer, City of Auburn

Printed Name, Title, & Jurisdiction

Consistency Review Guidance

For Use by Local Governments and Municipal Water Suppliers

This checklist may be used to meet the requirements of WAC 246-290-108. When using an alternative format, it must describe all of the elements; 1a), b), c), d), and e), when they apply.

For **water system plans (WSP)**, a consistency review is required for the service area and any additional areas where a municipal water supplier wants to expand its water right's place of use.

For **small water system management programs**, a consistency review is only required for areas where a municipal water supplier wants to expand its water right's place-of-use. If no water right place-of-use expansion is requested, a consistency review is not required.

For **engineering documents,** a consistency review is required for areas where a municipal water supplier wants to expand its water right's place-of-use (water system plan amendment is required). For noncommunity water systems, a consistency review is required when requesting a place-of-use expansion. All engineering documents must be submitted with a service area map (WAC 246-290-110(4)(b)(ii)).

A) Documenting Consistency: The planning or engineering document must include the following when applicable.

a) A copy of the adopted **land use/zoning** map corresponding to the service area. The uses provided in the WSP should be consistent with the adopted land use/zoning map. Include any other portions of comprehensive plans or development regulations that relate to water supply planning.

b) A copy of the **growth projections** that correspond to the service area. If the local population growth projections are not used, explain in detail why the chosen projections more accurately describe the expected growth rate. Explain how it is consistent with the adopted land use.

c) Include water service area policies and show that they are consistent with the **utility service extension ordinances** within the city or town boundaries. *This applies to cities and towns only*.

d) All **service area policies** for how new water service will be provided to new customers.

e) **Other relevant elements** the Department of Health determines are related to water supply planning. See Local Government Consistency – Other Relevant Elements, Policy B.07, September 2009.

B) Documenting an Inconsistency: Please document the inconsistency, include the citation from the comprehensive plan or development regulation, and explain how to resolve the inconsistency.

C) Documenting a Lack of Local Review for Consistency: Where the local government with jurisdiction did not provide a consistency review, document efforts made and the amount of time provided to the local government for review. Please include: name of contact, date, and efforts made (letters, phone calls, and emails). To self-certify, please contact the DOH Planner.

The Department of Health is an equal opportunity agency. For persons with disabilities, this document is available on request in other formats. To submit a request, please call 1-800-525-0127 (TTY 1-800-833-6388).

City of Covington

THIS PAGE INTENTIONALLY BLANK.

Kevin Garcia

From: Don Vondran <DVondran@covingtonwa.gov>
Sent: Wednesday, January 11, 2023 9:48 AM
To: Madison McCrosky
Cc: Ron Dorn; Brent Lewis; Chris Hall; Kevin Garcia; Salina Lyons
Subject: RE: Lake Meridian Water District - 2022 Water Comprehensive Plan - City of Covington Review [Filed 31 Mar 2023 13:48]

Categories: Filed by Mail Manager

Madison,

I have forwarded this request to Salina Lyons, our Community Development Director. I have cc'd her on this email as well. If you can update your contacts as she will be the primary contact going forward.

Don

From: Madison McCrosky <Madison.McCrosky@bhcconsultants.com>
Sent: Tuesday, January 10, 2023 1:09 PM
To: Don Vondran <DVondran@covingtonwa.gov>
Cc: Ron Dorn <Ron.Dorn@bhcconsultants.com>; Brent Lewis <brent@lakemeridianwater.com>; Chris Hall <chall@lakemeridianwater.com>; Kevin Garcia <Kevin.Garcia@bhcconsultants.com>
Subject: RE: Lake Meridian Water District - 2022 Water Comprehensive Plan - City of Covington Review
Importance: High

Hello Don:

Following up on my email from August regarding the Lake Meridian Water District 2022 Water Comprehensive Plan.

On behalf of Lake Meridian Water District, BHC Consultants, LLC is transmitting a copy of the draft *Lake Meridian Water District Comprehensive Plan*, dated August 4, 2022, and a copy of the partially completed DOH Form 331-568 (Local Government Consistency Determination Form) through the following SharePoint link:

LMWD 2022 Water Comprehensive Plan

In order to have the Plan approved by DOH, we need a copy of the signed Local Government Consistency Determination form from the City of Covington. We request that you conduct your review and respond to us with any comments within 30 days.

If you have any questions or wish to discuss further, please don't hesitate to contact Chris Hall (Lake Meridian Water District General Manager) at (253) 631-3770 or chall@lakemeridianwater.com or me at (206) 357-9952 or Madison.McCrosky@bhcconsultants.com.

Thanks,

Madison McCrosky, PE
Project Engineer
p. 206.357.9952

d. 509.396.1200
e. Madison.McCrosky@bhcconsultants.com

From: Madison McCrosky
Sent: Thursday, August 4, 2022 4:10 PM
To: dvondran@covingtonwa.gov
Cc: Ron Dorn <Ron.Dorn@bhcconsultants.com>; Brent Lewis <brent@lakemeridianwater.com>; Chris Hall <chall@lakemeridianwater.com>; Kevin Garcia <Kevin.Garcia@bhcconsultants.com>
Subject: RE: Lake Meridian Water District - 2022 Water Comprehensive Plan - City of Covington Review

Hello Don:

I wanted to let you know that we had some issues with our PDF software when we tried to reduce the file size that caused some readability issues with figures included in the Comprehensive Plan Document submitted last week.

I have reuploaded the WCP to the SharePoint with today's date, 8-4-2022. The only change was corrections to the readability of the figures. The previous file has been deleted. Please let me know if you have any issues with the document in the folder now. Thank you for your understanding.

Thanks,

Madison McCrosky, PE
Project Manager
p. 206.357.9952
d. 509.396.1200
e. Madison.McCrosky@bhcconsultants.com

From: Madison McCrosky
Sent: Friday, July 29, 2022 4:16 PM
To: dvondran@covingtonwa.gov
Cc: Ron Dorn <Ron.Dorn@bhcconsultants.com>; Brent Lewis <brent@lakemeridianwater.com>; Chris Hall <chall@lakemeridianwater.com>; Kevin Garcia <Kevin.Garcia@bhcconsultants.com>
Subject: Lake Meridian Water District - 2022 Water Comprehensive Plan - City of Covington Review [Filed 29 Jul 2022 16:16]

Dear Mr. Vondran:

On behalf of Lake Meridian Water District, BHC Consultants, LLC is transmitting a copy of the draft *Lake Meridian Water District Comprehensive Plan*, dated July 2022, and a copy of the partially completed DOH Form 331-568 (Local Government Consistency Determination Form) through the following SharePoint link: LMWD 2022 Water Comprehensive Plan
We request that you conduct your review and respond to us with any comments within 60 days.

If you have any questions or wish to discuss further, please don't hesitate to contact Chris Hall (Lake Meridian Water District General Manager) at (253) 631-3770 or chall@lakemeridianwater.com or me at (206) 357-9952 or Madison.McCrosky@bhcconsultants.com.

Sincerely,

Madison McCrosky, PE
Project Manager

p. 206.357.9952
d. 509.396.1200
e. Madison.McCrosky@bhcconsultants.com

1601 Fifth Avenue Suite 500
Seattle, Washington 98101
www.bhcconsultants.com

We're hiring! Visit our careers page here.

Offices in Seattle, Tacoma, and Bellingham.

This email and all attachments are confidential. For further information about emails sent to or from BHC Consultants or if you have received this email in error, please refer to http://bhcconsultants.com/disclaimer/

Kevin Garcia

From: Madison McCrosky
Sent: Friday, March 31, 2023 1:52 PM
To: Kevin Garcia
Subject: FW: Lake Meridian Water District - 2022 Water Comprehensive Plan - City of Covington Review
Attachments: 331-568 - Local Government Cont. Dert. Form.pdf

Thanks,

Madison McCrosky, PE
Project Engineer
p. 206.357.9952
d. 509.396.1200
e. Madison.McCrosky@bhcconsultants.com

From: Dafne Hernandez <dhernandez@covingtonwa.gov>
Sent: Wednesday, February 1, 2023 4:16 PM
To: Madison McCrosky <Madison.McCrosky@bhcconsultants.com>; Chris Hall <chall@lakemeridianwater.com>
Subject: Lake Meridian Water District - 2022 Water Comprehensive Plan - City of Covington Review [Filed 02 Feb 2023 09:57]

> You don't often get email from dhernandez@covingtonwa.gov. Learn why this is important

Good evening,

The city has completed the review for lake Meridian Water District - 2022 Water Comprehensive Plan. I have attached the consistency determination document. Please let me know if you have any questions.

Thank you,

Dafne Hernandez
Pronouns: (she/her/ella)
Associate Planner
City of Covington
(253)-480-2442
www.covingtonwa.gov

Local Government Consistency Determination Form

Water System Name: LAKE MERIDIAN WATER DISTRICT PWS ID: 41900B

Planning/Engineering Document Title: 2022 WATER COMPREHENSIVE PLAN Plan Date: 07/29/2022

Local Government with Jurisdiction Conducting Review: City of Covington

Before the Department of Health (DOH) approves a planning or engineering submittal under Section 100 or Section 110, the local government must review the documentation the municipal water supplier provides to prove the submittal is consistent with **local comprehensive plans, land use plans and development regulations** (WAC 246-290-108). Submittals under Section 105 require a local consistency determination if the municipal water supplier requests a water right place-of-use expansion. The review must address the elements identified below as they relate to water service.

By signing this form, the local government reviewer confirms the document under review is consistent with applicable local plans and regulations. If the local government reviewer identifies an inconsistency, he or she should include the citation from the applicable comprehensive plan or development regulation and explain how to resolve the inconsistency, or confirm that the inconsistency is not applicable by marking N/A. See more instructions on reverse.

	For use by water system	For use by local government
Local Government Consistency Statement	**Identify the page(s) in submittal**	**Yes or Not Applicable**
a) The water system service area is consistent with the adopted land use and zoning within the service area.	2-1 TO 2-3	Yes
b) The growth projection used to forecast water demand is consistent with the adopted city or county's population growth projections. If a different growth projection is used, provide an explanation of the alternative growth projection and methodology.	2-5 TO 2-6	Yes
c) For cities and towns that provide water service: All water service area policies of the city or town described in the plan conform to all relevant utility service extension ordinances.	3-2 TO 3-4	Not Applicable
d) Service area policies for new service connections conform to the adopted local plans and adopted development regulations of all cities and counties with jurisdiction over the service area.	3-4 TO 3-5	Yes
e) Other relevant elements related to water supply are addressed in the water system plan, if applicable. This may include Coordinated Water System Plans, Regional Wastewater Plans, Reclaimed Water Plans, Groundwater Management Area Plans, and the Capital Facilities Element of local comprehensive plans.	3-14	Yes

I certify that the above statements are true to the best of my knowledge and that these specific elements are consistent with adopted local plans and development regulations.

Salina K Lyons, AICP

Signature Date

February 1, 2023

Printed Name, Title, & Jurisdiction

Consistency Review Guidance

For Use by Local Governments and Municipal Water Suppliers

This checklist may be used to meet the requirements of WAC 246-290-108. When using an alternative format, it must describe all of the elements; 1a), b), c), d), and e), when they apply.

For **water system plans (WSP)**, a consistency review is required for the service area and any additional areas where a municipal water supplier wants to expand its water right's place of use.

For **small water system management programs**, a consistency review is only required for areas where a municipal water supplier wants to expand its water right's place-of-use. If no water right place-of-use expansion is requested, a consistency review is not required.

For **engineering documents,** a consistency review is required for areas where a municipal water supplier wants to expand its water right's place-of-use (water system plan amendment is required). For noncommunity water systems, a consistency review is required when requesting a place-of-use expansion. All engineering documents must be submitted with a service area map (WAC 246-290-110(4)(b)(ii)).

A) Documenting Consistency: The planning or engineering document must include the following when applicable.

a) A copy of the adopted **land use/zoning** map corresponding to the service area. The uses provided in the WSP should be consistent with the adopted land use/zoning map. Include any other portions of comprehensive plans or development regulations that relate to water supply planning.

b) A copy of the **growth projections** that correspond to the service area. If the local population growth projections are not used, explain in detail why the chosen projections more accurately describe the expected growth rate. Explain how it is consistent with the adopted land use.

c) Include water service area policies and show that they are consistent with the **utility service extension ordinances** within the city or town boundaries. *This applies to cities and towns only.*

d) All **service area policies** for how new water service will be provided to new customers.

e) **Other relevant elements** the Department of Health determines are related to water supply planning. See Local Government Consistency – Other Relevant Elements, Policy B.07, September 2009.

B) Documenting an Inconsistency: Please document the inconsistency, include the citation from the comprehensive plan or development regulation, and explain how to resolve the inconsistency.

C) Documenting a Lack of Local Review for Consistency: Where the local government with jurisdiction did not provide a consistency review, document efforts made and the amount of time provided to the local government for review. Please include: name of contact, date, and efforts made (letters, phone calls, and emails). To self-certify, please contact the DOH Planner.

The Department of Health is an equal opportunity agency. For persons with disabilities, this document is available on request in other formats. To submit a request, please call 1-800-525-0127 (TTY 1-800-833-6388).

City of Kent

THIS PAGE INTENTIONALLY BLANK.

Kevin Garcia

From: Holdsworth, Kristen <KHoldsworth@kentwa.gov>
Sent: Monday, March 20, 2023 5:47 PM
To: Madison McCrosky
Cc: chall@lakemeridianwater.com; brent@lakemeridianwater.com; Kevin Garcia; Ron Dorn; Gilbert, Matthew; Hanson, Kurt; Bieren, Chad; Peterson, Kelly
Subject: RE: Lake Meridian Water District - 2022 Water Comprehensive Plan - City of Kent Review
Attachments: 2023.03.20 LMWD WCP_ Kent Comments.pdf

> Some people who received this message don't often get email from kholdsworth@kentwa.gov. Learn why this is important

Hi Madison-

Thanks for taking the time today to discuss Lake Meridian Water District's Water Comprehensive Plan.

I have reviewed and find the plan to be generally consistent with the City's adopted plans, with a few minor amendments for clarification. Please see the attached letter and consistency determination form.

Please let me know if you have any questions.

Best,
Kristen

Kristen Holdsworth, AICP (she/her), *Long Range Planning Manager*
Planning Services | Economic & Community Development
400 West Gowe, Kent, WA 98032
Main 253-856-5428 | Office 253-856-5441 | Cell 206-580-5673
kholdsworth@KentWA.gov

CITY OF KENT, WASHINGTON
KentWA.gov **Facebook** **Twitter** **YouTube** **Instagram**

From: Madison McCrosky <Madison.McCrosky@bhcconsultants.com>
Sent: Monday, March 20, 2023 3:29 PM
To: Holdsworth, Kristen <KHoldsworth@kentwa.gov>
Cc: chall@lakemeridianwater.com; brent@lakemeridianwater.com; Kevin Garcia <Kevin.Garcia@bhcconsultants.com>; Ron Dorn <Ron.Dorn@bhcconsultants.com>
Subject: RE: Lake Meridian Water District - 2022 Water Comprehensive Plan - City of Kent Review

EXTERNAL EMAIL

Hello Kristen –

Yes, I am free today after 4:30 or anytime tomorrow after 10:00 am. Please let me know what works best for you.

Thanks,

Madison McCrosky, PE
Project Engineer

p. 206.357.9952
d. 509.396.1200
e. Madison.McCrosky@bhcconsultants.com

From: Holdsworth, Kristen <KHoldsworth@kentwa.gov>
Sent: Monday, March 20, 2023 2:44 PM
To: Madison McCrosky <Madison.McCrosky@bhcconsultants.com>
Cc: chall@lakemeridianwater.com; brent@lakemeridianwater.com; Kevin Garcia <Kevin.Garcia@bhcconsultants.com>; Ron Dorn <Ron.Dorn@bhcconsultants.com>
Subject: RE: Lake Meridian Water District - 2022 Water Comprehensive Plan - City of Kent Review

Hi Madison-

Do you have a few minutes to chat about the LMWD Water Comprehensive Plan? It appears that you're using some outdated sources (slightly different zoning map, old population stats, Vision 2040, etc) and I'm hoping to get some context before providing official comments for the record.

Thanks!

Kristen Holdsworth, AICP (she/her), *Long Range Planning Manager*
Planning Services | Economic & Community Development
400 West Gowe, Kent, WA 98032
Main 253-856-5428 | Office 253-856-5441 | Cell 206-580-5673
kholdsworth@KentWA.gov

CITY OF KENT, WASHINGTON
KentWA.gov **Facebook** **Twitter** **YouTube** **Instagram**

From: Madison McCrosky <Madison.McCrosky@bhcconsultants.com>
Sent: Friday, March 17, 2023 3:45 PM
To: Holdsworth, Kristen <KHoldsworth@kentwa.gov>
Cc: chall@lakemeridianwater.com; brent@lakemeridianwater.com; Kevin Garcia <Kevin.Garcia@bhcconsultants.com>; Ron Dorn <Ron.Dorn@bhcconsultants.com>
Subject: RE: Lake Meridian Water District - 2022 Water Comprehensive Plan - City of Kent Review

EXTERNAL EMAIL

Hello Kristen –

Thank you for letting us know that you will be reviewing Lake Meridian's Water System Plan over the weekend.

The Sharepoint link from January is still active. Please let me know if you have any troubles accessing the plan.

We look forward to the City of Kent's review.

Thanks,

Madison McCrosky, PE
Project Engineer
p. 206.357.9952
d. 509.396.1200
e. Madison.McCrosky@bhcconsultants.com

From: Holdsworth, Kristen <KHoldsworth@kentwa.gov>
Sent: Friday, March 17, 2023 3:39 PM
To: Madison McCrosky <Madison.McCrosky@bhcconsultants.com>
Cc: chall@lakemeridianwater.com; brent@lakemeridianwater.com; Kevin Garcia <Kevin.Garcia@bhcconsultants.com>; Ron Dorn <Ron.Dorn@bhcconsultants.com>
Subject: RE: Lake Meridian Water District - 2022 Water Comprehensive Plan - City of Kent Review

Hi Madison-

I'm the new Long Range Planning Manager for the City of Kent. This just landed in my inbox for review. I'm so sorry it seems you've had a hard time finding someone at the City to review and provide comments/verification.

I know time is tight as you're headed for approval on March 23. I will review this over the weekend or first thing Monday morning. Just wanted to let you know it's now on my radar. Thanks for your understanding!

Best,
Kristen

Kristen Holdsworth, AICP (she/her), *Long Range Planning Manager*
Planning Services | Economic & Community Development
400 West Gowe, Kent, WA 98032
Main 253-856-5428 | Office 253-856-5441 | Cell 206-580-5673
kholdsworth@KentWA.gov

CITY OF KENT, WASHINGTON
KentWA.gov **Facebook** **Twitter** **YouTube** **Instagram**

From: Madison McCrosky <Madison.McCrosky@bhcconsultants.com>
Sent: Tuesday, March 7, 2023 2:34 PM
To: Gilbert, Matthew <MGilbert@kentwa.gov>
Cc: chall@lakemeridianwater.com; brent@lakemeridianwater.com; Kevin Garcia <Kevin.Garcia@bhcconsultants.com>; Ron Dorn <Ron.Dorn@bhcconsultants.com>
Subject: RE: Lake Meridian Water District - 2022 Water Comprehensive Plan - City of Kent Review
Importance: High

EXTERNAL EMAIL

Hello Matt:

The LMWD Water Comprehensive Plan is going to the District Board of Commissioners on March 23rd for approval. We request that if the City of Kent has comments on the Lake Meridian Water District - Water Comprehensive Plan, those comments are submitted to Lake Meridian Water District or BHC Consultants, no later than March 17, 2023.

Thank you,

Madison McCrosky, PE
Project Engineer
p. 206.357.9952
d. 509.396.1200
e. Madison.McCrosky@bhcconsultants.com

1601 Fifth Avenue Suite 500
Seattle, Washington 98101
www.bhcconsultants.com

We're hiring! Visit our careers page here.

Offices in Seattle, Tacoma, and Bellingham.

This email and all attachments are confidential. For further information about emails sent to or from BHC Consultants or if you have received this email in error, please refer to http://bhcconsultants.com/disclaimer/

From: Madison McCrosky <Madison.McCrosky@bhcconsultants.com>
Sent: Tuesday, February 21, 2023 2:05 PM
To: Gilbert, Matthew <MGilbert@kentwa.gov>
Cc: chall@lakemeridianwater.com; brent@lakemeridianwater.com; Ron Dorn <Ron.Dorn@bhcconsultants.com>; kevin.garcia@bhcconcultants.com
Subject: RE: Lake Meridian Water District - 2022 Water Comprehensive Plan - City of Kent Review
Importance: High

Hello Matt:

I am following up on my previous email regarding City of Kent's review of Lake Meridian's Water Comprehensive Plan. In order to have the Plan approved by DOH, we need a copy of the signed Local Government Consistency Determination form from the City of Kent.

Do you have a timeline estimate for when the City of Kent review will be complete? In order to adequately respond to any comments the City may have, we request any comments are provided as soon as possible.

Please let us know if have any questions or need any additional information.

Thanks,

Madison McCrosky, PE
Project Engineer
p. 206.357.9952
d. 509.396.1200
e. Madison.McCrosky@bhcconsultants.com

From: Public Works <PublicWorks@kentwa.gov>
Sent: Wednesday, January 18, 2023 10:19 AM
To: Madison McCrosky <Madison.McCrosky@bhcconsultants.com>
Cc: chall@lakemeridianwater.com; brent@lakemeridianwater.com; Ron Dorn <Ron.Dorn@bhcconsultants.com>; kevin.garcia@bhcconcultants.com
Subject: FW: Lake Meridian Water District - 2022 Water Comprehensive Plan - City of Kent Review [Filed 25 Jan 2023 11:08]
Importance: High

Madison,

Your message was forwarded to Matt Gilbert, Deputy Director Economic and Community Development. Matt can be reached at mgilbert@kentwa.gov or by calling (253) 856-5435.

Sincerely,

Cheryl

Cheryl Viseth, *Administrative Assistant III*
Engineering Administration | Public Works Department
400 West Gowe Street, Kent, WA 98032
Phone **253-856-5504**
CViseth@KentWA.gov

CITY OF KENT, WASHINGTON
KentWA.gov **Facebook** **Twitter** **YouTube** **Instagram**

From: Public Works
Sent: Wednesday, January 11, 2023 4:34 PM
To: Bieren, Chad <CBieren@kentwa.gov>; Peterson, Kelly <KPeterson@kentwa.gov>
Subject: FW: Lake Meridian Water District - 2022 Water Comprehensive Plan - City of Kent Review
Importance: High

Looks like Lake Meridian Water needs something from you.

From: Madison McCrosky <Madison.McCrosky@bhcconsultants.com>
Sent: Tuesday, January 10, 2023 1:12 PM
To: Public Works <PublicWorks@kentwa.gov>
Cc: Brock, David <DBrock@kentwa.gov>; Chris Hall <chall@lakemeridianwater.com>; Brent Lewis <brent@lakemeridianwater.com>; Ron Dorn <Ron.Dorn@bhcconsultants.com>; Kevin Garcia <Kevin.Garcia@bhcconsultants.com>
Subject: RE: Lake Meridian Water District - 2022 Water Comprehensive Plan - City of Kent Review
Importance: High

EXTERNAL EMAIL

Hello Dave and Chad:

I am following up on my email from August regarding the Lake Meridian Water District 2022 Water Comprehensive Plan.

On behalf of Lake Meridian Water District, BHC Consultants, LLC is transmitting a copy of the draft *Lake Meridian Water District Comprehensive Plan*, dated August 4, 2022, and a copy of the partially completed DOH Form 331-568 (Local Government Consistency Determination Form) through the following SharePoint link:

LMWD 2022 Water Comprehensive Plan

In order to have the Plan approved by DOH, we need a copy of the signed Local Government Consistency Determination form from the City of Kent. We request that you conduct your review and respond to us with any comments within 30 days.

If you have any questions or wish to discuss further, please don't hesitate to contact Chris Hall at (253) 631-3770 or chall@lakemeridianwater.com or me at (206) 357-9952 or Madison.McCrosky@bhcconsultants.com.

Thanks,

Madison McCrosky, PE
Project Engineer
p. 206.357.9952
d. 509.396.1200
e. Madison.McCrosky@bhcconsultants.com

From: Madison McCrosky
Sent: Thursday, August 4, 2022 4:10 PM
To: publicworks@kentwa.gov
Cc: Brock, David <DBrock@kentwa.gov>; Chris Hall <chall@lakemeridianwater.com>; Brent Lewis <brent@lakemeridianwater.com>; Ron Dorn <Ron.Dorn@bhcconsultants.com>; Kevin Garcia <Kevin.Garcia@bhcconsultants.com>
Subject: RE: Lake Meridian Water District - 2022 Water Comprehensive Plan - City of Kent Review [Filed 04 Aug 2022 16:09]

Hello Chad and Dave:

I wanted to let you know that we had some issues with our PDF software when we tried to reduce the file size that caused some readability issues with figures included in the Comprehensive Plan Document submitted last week.

I have reuploaded the WCP to the SharePoint with today's date, 8-4-2022. The only change was corrections to the readability of the figures. The previous file has been deleted. Please let me know if you have any issues with the document in the folder now. Thank you for your understanding.

Thanks,

Madison McCrosky, PE
Project Manager
p. 206.357.9952
d. 509.396.1200
e. Madison.McCrosky@bhcconsultants.com

From: Madison McCrosky
Sent: Friday, July 29, 2022 4:15 PM
To: publicworks@kentwa.gov
Cc: Brock, David <DBrock@kentwa.gov>; Chris Hall <chall@lakemeridianwater.com>; Brent Lewis <brent@lakemeridianwater.com>; Ron Dorn <Ron.Dorn@bhcconsultants.com>; Kevin Garcia

<Kevin.Garcia@bhcconsultants.com>
Subject: Lake Meridian Water District - 2022 Water Comprehensive Plan - City of Kent Review [Filed 29 Jul 2022 16:15]

Dear Mr. Bieren:

On behalf of Lake Meridian Water District, BHC Consultants, LLC is transmitting a copy of the draft *Lake Meridian Water District Comprehensive Plan*, dated July 2022, and a copy of the partially completed DOH Form 331-568 (Local Government Consistency Determination Form) through the following SharePoint link: LMWD 2022 Water Comprehensive Plan
We request that you conduct your review and respond to us with any comments within 60 days.

If you have any questions or wish to discuss further, please don't hesitate to contact Chris Hall (Lake Meridian Water District General Manager) at (253) 631-3770 or chall@lakemeridianwater.com or me at (206) 357-9952 or Madison.McCrosky@bhcconsultants.com.

Sincerely,
Madison McCrosky, PE
Project Manager
p. 206.357.9952
d. 509.396.1200
e. Madison.McCrosky@bhcconsultants.com

1601 Fifth Avenue Suite 500
Seattle, Washington 98101
www.bhcconsultants.com

We're hiring! Visit our careers page here.

Offices in Seattle, Tacoma, and Bellingham.

This email and all attachments are confidential. For further information about emails sent to or from BHC Consultants or if you have received this email in error, please refer to http://bhcconsultants.com/disclaimer/

ECONOMIC & COMMUNITY DEVELOPMENT
Kurt Hanson, Director

220 Fourth Avenue South
Kent, WA 98032-5895
Fax: 253-856-6454

Phone: 253-856-5454

Madison McCrosky, PE
Project Engineer, BHC Consultants
Madison.McCrosky@bhcconsultants.com
Sent Via Email

March 20, 2023

Re: Review of Lake Meridian Water District Comprehensive Plan (July 2022)

Dear Madison McCrosky,

Thank you for the opportunity to review and comment on the draft 2022 Lake Meridian Water District Comprehensive Plan dated July 2022.

The City of Kent's last substantial periodic Comprehensive Plan update was adopted in 2015. According to state Growth Management Act (GMA) requirements, we are in the process of our next periodic update, which must be adopted by December 31, 2024. As such, we are in a transition period between our adopted growth targets and planning for new, updated targets through 2044. At this time, we have not allocated distribution of this new growth to specific locations throughout the City. As the City works to update our Comprehensive Plan, we look forward to collaborating to discuss any changes in expected growth patterns.

It is our understanding that the effort to update Lake Meridian Water District's Comprehensive Plan started in 2015. While generally consistent with the City's adopted 2015 Comprehensive Plan, we would like to suggest the following changes and additional context to recognize state, regional, and local updates since the adoption of Kent's 2015 Comprehensive Plan. Changes are shown as additions (in underline text) and removal (in ~~strikethrough~~):

1. Page 1-21: Under the "City of Kent Comprehensive Plan" section, please revise as follows:

   The City of Kent Comprehensive Plan (Kent Plan) was adopted in 1995. Subsequent updates have responded to local, regional, and statewide policy issues and development projects, significant annexations, and amendments to the Growth Management Act (GMA). The Kent Plan was updated in 2015, in accordance with the GMA periodic update cycle. The City is currently working on the next Periodic Update, which must be adopted by December 31, 2024. According to Census estimates, in 2022 the City's population was 134,835 residents and encompassed a land area of 33.75 square miles. ~~As of 2004, the City served over 84,000 people covering 29.4 square miles.~~ Most of the District's service area lies within Kent's city limits. Kent provides policy direction on

coordinating with local utility providers to ensure consistency with its Comprehensive Plan.

2. Page 2-1: At the end of the paragraph for "2.3 Land Use and Zoning" please add the following statement:

   The jurisdictions served by Lake Meridian Water District are all required to complete periodic updates to their Comprehensive Plans by December 31, 2024. Kent is required to plan for and accommodate an additional 10,200 new residential units and 32,000 jobs citywide by 2044. Since this work is in progress, this plan relies on the adopted 2015 Comprehensive Plan information. Additionally, there are several pending state bills which may affect land use and growth during the upcoming planning horizon. Lake Meridian Water District and the City of Kent will collaborate during the City's Comprehensive Plan update process to explore how these changes may affect future population growth, including infrastructure and service needs.

3. Figure 2-1: There are slight inconsistencies in the zoning map designations. I will send a separate email to connect you with the appropriate person to provide the most recent zoning information.

4. Page 2-5: Since this project started in 2015, the data relies on Vision 2040 data from PSRC. In October 2020, PSRC adopted Vision 2050 and updated data to be consistent with this vision. Please add a note clarifying whey Vision 2040 data was used and indicate whether there are any significant differences between the Vision 2050 and Vision 2040 data.

Thank you, again, for the opportunity to review. If you have any questions, I can be reached at kholdsworth@kentwa.gov or 206- 580-5673.

Regards,

Kristen E. Holdsworth, AICP
Long Range Planning Manager
City of Kent, Economic and Community Development

Attachment: Kent Local Government Consistency Determination Form

cc: Kurt Hanson (khanson@kentwa.gov); Matt Gilbert (mgilbert@kentwa.gov); Chad Bieren (cbieren@kentwa.gov); Kelly Peterson (kpeterson@kentwa.gov); Chris Hall (chall@lakemeridianwater.com); Brent Lewis (brent@lakemeridianwater.com); Kevin Garcia (Kevin.Garcia@bhcconsultants.com); and Ron Dorn (Ron.Dorn@bhcconsultants.com)

Local Government Consistency Determination Form

Water System Name: LAKE MERIDIAN WATER DISTRICT PWS ID: 41900B

Planning/Engineering Document Title: 2022 WATER COMPREHENSIVE PLAN Plan Date: 07/29/2022

Local Government with Jurisdiction Conducting Review: City of Kent

Before the Department of Health (DOH) approves a planning or engineering submittal under Section 100 or Section 110, the local government must review the documentation the municipal water supplier provides to prove the submittal is consistent with **local comprehensive plans, land use plans and development regulations** (WAC 246-290-108). Submittals under Section 105 require a local consistency determination if the municipal water supplier requests a water right place-of-use expansion. The review must address the elements identified below as they relate to water service.

By signing this form, the local government reviewer confirms the document under review is consistent with applicable local plans and regulations. If the local government reviewer identifies an inconsistency, he or she should include the citation from the applicable comprehensive plan or development regulation and explain how to resolve the inconsistency, or confirm that the inconsistency is not applicable by marking N/A. See more instructions on reverse.

	For use by water system	For use by local government
Local Government Consistency Statement	**Identify the page(s) in submittal**	**Yes or Not Applicable**
a) The water system service area is consistent with the adopted land use and zoning within the service area.	2-1 TO 2-3	Yes With changes noted in Cover Letter
b) The growth projection used to forecast water demand is consistent with the adopted city or county's population growth projections. If a different growth projection is used, provide an explanation of the alternative growth projection and methodology.	2-5 TO 2-6	Yes With changes noted in Cover Letter
c) For cities and towns that provide water service: All water service area policies of the city or town described in the plan conform to all relevant utility service extension ordinances.	3-2 TO 3-4	Yes
d) Service area policies for new service connections conform to the adopted local plans and adopted development regulations of all cities and counties with jurisdiction over the service area.	3-4 TO 3-5	Yes
e) Other relevant elements related to water supply are addressed in the water system plan, if applicable. This may include Coordinated Water System Plans, Regional Wastewater Plans, Reclaimed Water Plans, Groundwater Management Area Plans, and the Capital Facilities Element of local comprehensive plans.	3-14	Yes

I certify that the above statements are true to the best of my knowledge and that these specific elements are consistent with adopted local plans and development regulations.

Kristen E Holdsworth 3/20/2023

Signature Date

Kristen Holdsworth, AICP, Long Range Planning Manager, City of Kent

Printed Name, Title, & Jurisdiction

Consistency Review Guidance

For Use by Local Governments and Municipal Water Suppliers

This checklist may be used to meet the requirements of WAC 246-290-108. When using an alternative format, it must describe all of the elements; 1a), b), c), d), and e), when they apply.

For **water system plans (WSP)**, a consistency review is required for the service area and any additional areas where a municipal water supplier wants to expand its water right's place of use.

For **small water system management programs**, a consistency review is only required for areas where a municipal water supplier wants to expand its water right's place-of-use. If no water right place-of-use expansion is requested, a consistency review is not required.

For **engineering documents,** a consistency review is required for areas where a municipal water supplier wants to expand its water right's place-of-use (water system plan amendment is required). For noncommunity water systems, a consistency review is required when requesting a place-of-use expansion. All engineering documents must be submitted with a service area map (WAC 246-290-110(4)(b)(ii)).

A) Documenting Consistency: The planning or engineering document must include the following when applicable.

a) A copy of the adopted **land use/zoning** map corresponding to the service area. The uses provided in the WSP should be consistent with the adopted land use/zoning map. Include any other portions of comprehensive plans or development regulations that relate to water supply planning.

b) A copy of the **growth projections** that correspond to the service area. If the local population growth projections are not used, explain in detail why the chosen projections more accurately describe the expected growth rate. Explain how it is consistent with the adopted land use.

c) Include water service area policies and show that they are consistent with the **utility service extension ordinances** within the city or town boundaries. *This applies to cities and towns only.*

d) All **service area policies** for how new water service will be provided to new customers.

e) **Other relevant elements** the Department of Health determines are related to water supply planning. See Local Government Consistency – Other Relevant Elements, Policy B.07, September 2009.

B) Documenting an Inconsistency: Please document the inconsistency, include the citation from the comprehensive plan or development regulation, and explain how to resolve the inconsistency.

C) Documenting a Lack of Local Review for Consistency: Where the local government with jurisdiction did not provide a consistency review, document efforts made and the amount of time provided to the local government for review. Please include: name of contact, date, and efforts made (letters, phone calls, and emails). To self-certify, please contact the DOH Planner.

The Department of Health is an equal opportunity agency. For persons with disabilities, this document is available on request in other formats. To submit a request, please call 1-800-525-0127 (TTY 1-800-833-6388).

THIS PAGE INTENTIONALLY BLANK.

Covington Water District

THIS PAGE INTENTIONALLY BLANK.

Kevin Garcia

From: Steve Lee <steve.lee@covingtonwater.com>
Sent: Thursday, February 16, 2023 11:50 AM
To: Madison McCrosky
Cc: Chris Hall; Kevin Garcia; Ron Dorn; Brent Lewis
Subject: RE: RE: Lake Meridian Water District - 2022 Water Comprehensive Plan - Covington Water Review

> Some people who received this message don't often get email from steve.lee@covingtonwater.com. Learn why this is important

HI Maddy,

You have our comments via a separate FTP link. Please let me know if you have any issues with receiving the file. I have personally completed over a 100 plans in my lifetime… Great job!

Thanks!
Steve

From: Madison McCrosky <Madison.McCrosky@bhcconsultants.com>
Sent: Monday, February 6, 2023 2:54 PM
To: Steve Lee <steve.lee@covingtonwater.com>
Cc: Chris Hall <chall@lakemeridianwater.com>; Kevin Garcia <Kevin.Garcia@bhcconsultants.com>; Ron Dorn <Ron.Dorn@bhcconsultants.com>; Brent Lewis <brent@lakemeridianwater.com>
Subject: RE: RE: Lake Meridian Water District - 2022 Water Comprehensive Plan - Covington Water Review

CAUTION: This email originated from outside your organization. Exercise caution when opening attachments or clicking links, especially from unknown senders.

Hi Steve –

Thank you for providing an update on the comments from Covington WD.

Thanks,
Maddy
Madison McCrosky, PE
Project Engineer
p. 206.357.9952
d. 509.396.1200
e. Madison.McCrosky@bhcconsultants.com

From: Steve Lee <steve.lee@covingtonwater.com>
Sent: Monday, February 6, 2023 2:47 PM
To: Madison McCrosky <Madison.McCrosky@bhcconsultants.com>
Subject: RE: RE: Lake Meridian Water District - 2022 Water Comprehensive Plan - Covington Water Review

HI Maddy,

I have some comments regarding the plan you provided us and will get that back to you by the end of this week along with a cover letter.

Thanks,
Steve

From: Madison McCrosky <Madison.McCrosky@bhcconsultants.com>
Sent: Tuesday, January 10, 2023 1:25 PM
To: Tom Keown <thomas.keown@covingtonwater.com>; Steve Lee <steve.lee@covingtonwater.com>
Cc: Brent Lewis <brent@lakemeridianwater.com>; Chris Hall <chall@lakemeridianwater.com>; Ron Dorn <Ron.Dorn@bhcconsultants.com>; Kevin Garcia <Kevin.Garcia@bhcconsultants.com>; Dan Sleeth <dan.sleeth@covingtonwater.com>; Caren Sleeth <caren.sleeth@covingtonwater.com>
Subject: RE: RE: Lake Meridian Water District - 2022 Water Comprehensive Plan - Covington Water Review

CAUTION: This email originated from outside your organization. Exercise caution when opening attachments or clicking links, especially from unknown senders.

Hello Tom and Steve:

Lake Meridian just received their first review of the water system plan by DOH. BHC is working on revisions to the Water System Plan to resubmit to DOH by mid-March. I am reaching out to Covington Water District to see if you had any comments for us on the plan. We kindly request you send us any comments you may have within 30 days. The SharePoint link is provided below.

LMWD 2022 Water Comprehensive Plan

As always, please do not hesitate to reach out to Chris or me if there are any questions.

Thank you,
Maddy
Madison McCrosky, PE
Project Engineer
p. 206.357.9952
d. 509.396.1200
e. Madison.McCrosky@bhcconsultants.com

From: Madison McCrosky
Sent: Thursday, August 4, 2022 4:02 PM
To: Tom Keown <thomas.keown@covingtonwater.com>
Cc: Brent Lewis <brent@lakemeridianwater.com>; Chris Hall <chall@lakemeridianwater.com>; Ron Dorn <Ron.Dorn@bhcconsultants.com>; Kevin Garcia <Kevin.Garcia@bhcconsultants.com>; Steve Lee <steve.lee@covingtonwater.com>; Dan Sleeth <dan.sleeth@covingtonwater.com>; Caren Gallion <caren.gallion@covingtonwater.com>
Subject: RE: Lake Meridian Water District - 2022 Water Comprehensive Plan - Covington Water Review [Filed 04 Aug 2022 16:02]

Hello Tom,

Thank you for confirming receipt of the plan.

I wanted to let you know that we had some issues with our PDF software when we tried to reduce the file size that caused some readability issues with figures included in the Comprehensive Plan Document submitted last week.

I have reuploaded the WCP to the SharePoint with today's date, 8-4-2022. The only change was corrections to the readability of the figures. The previous file has been deleted. Please let me know if you have any issues with the document in the folder now. Thank you for your understanding.

Thanks,

Madison McCrosky, PE
Project Engineer
p. 206.357.9952
d. 509.396.1200
e. Madison.McCrosky@bhcconsultants.com

From: Tom Keown <thomas.keown@covingtonwater.com>
Sent: Friday, July 29, 2022 5:57 PM
To: Madison McCrosky <Madison.McCrosky@bhcconsultants.com>
Cc: Brent Lewis <brent@lakemeridianwater.com>; Chris Hall <chall@lakemeridianwater.com>; Ron Dorn <Ron.Dorn@bhcconsultants.com>; Kevin Garcia <Kevin.Garcia@bhcconsultants.com>; Steve Lee <steve.lee@covingtonwater.com>; Dan Sleeth <dan.sleeth@covingtonwater.com>; Caren Gallion <caren.gallion@covingtonwater.com>
Subject: RE: Lake Meridian Water District - 2022 Water Comprehensive Plan - Covington Water Review

Thanks Madison! CWD appreciates the opportunity to review our good neighbor's plan. Hope you all stay cool/hydrated this weekend. 😊

Thomas Keown, P.E.
General Manager

Main 253.631.0565 | **Direct** 253.867.0900 | **Fax** 253.867.0899
"Nearly all men can stand adversity, but if you want to test a man's character, give him power." – Abraham Lincoln

Find out more about us on Twitter:

From: Madison McCrosky <Madison.McCrosky@bhcconsultants.com>
Sent: Friday, July 29, 2022 4:15 PM
To: Tom Keown <thomas.keown@covingtonwater.com>
Cc: Brent Lewis <brent@lakemeridianwater.com>; Chris Hall <chall@lakemeridianwater.com>; Ron Dorn <Ron.Dorn@bhcconsultants.com>; Kevin Garcia <Kevin.Garcia@bhcconsultants.com>
Subject: Lake Meridian Water District - 2022 Water Comprehensive Plan - Covington Water Review

CAUTION: This email originated from outside your organization. Exercise caution when opening attachments or clicking links, especially from unknown senders.

Dear Mr. Keown:

On behalf of Lake Meridian Water District, BHC Consultants, LLC is transmitting a copy of the draft *Lake Meridian Water District Comprehensive Plan*, dated July 2022, and a copy of the partially completed DOH Form 331-568 (Local Government Consistency Determination Form) through the following SharePoint link: LMWD 2022 Water Comprehensive Plan
We request that you conduct your review and respond to us with any comments within 60 days.

If you have any questions or wish to discuss further, please don't hesitate to contact Chris Hall (Lake Meridian Water District General Manager) at (253) 631-3770 or chall@lakemeridianwater.com or me at (206) 357-9952 or Madison.McCrosky@bhcconsultants.com.

Sincerely,

Madison McCrosky, PE
Project Manager
p. 206.357.9952
d. 509.396.1200
e. Madison.McCrosky@bhcconsultants.com

1601 Fifth Avenue Suite 500
Seattle, Washington 98101
www.bhcconsultants.com

We're hiring! Visit our careers page here.

Offices in Seattle, Tacoma, and Bellingham.

This email and all attachments are confidential. For further information about emails sent to or from BHC Consultants or if you have received this email in error, please refer to http://bhcconsultants.com/disclaimer/

NOTICE: All emails and attachments sent to and from Covington Water District are public records and may be subject to disclosure pursuant to the Public Records Act (RCW 42.56).

NOTICE: All emails and attachments sent to and from Covington Water District are public records and may be subject to disclosure pursuant to the Public Records Act (RCW 42.56).

NOTICE: All emails and attachments sent to and from Covington Water District are public records and may be subject to disclosure pursuant to the Public Records Act (RCW 42.56).

COMMISSIONERS:
Alan Eades
Kevin Fuhrer
Brad Lake
David B. Roselle
Tal Weberg
GENERAL MANAGER:
Thomas Keown, P.E.

Covington WATER DISTRICT

February 15, 2023

VIA REGULAR U.S. MAIL

Madison McCrosky, PE
BHC Consultants
1601 Fifth Avenue, Suite 500
Seattle, WA 98101

Re: Lake Meridian Water System Plan Draft 2023 WSP for Review

Dear Ms. McCrosky,

Thank you for sending the Draft Lake Meridian Water District – 2022 Water Comprehensive Plan on behalf of Lake Meridian Water District to the Covington Water District. Upon review we have the following request that you please update the following comments:

1. Page 19 and 41. Revise a slight angle line for the retail water service line adjacent to the CWD west service line just to the east of the emergency intertie location on SE 272nd Street. Please coordinate with Mike Velasco as well as use the Coordinated Water System Plan. Please revise all other figures, if needed, after verifying with Mike Velasco (Covington Water District GIS Coordinator).

2. Page 55. See comments on the attached and redlined 2022 LMWD Water Comprehensive Plan. We believe some of the text in Section 1.7.4 is old text from how the system used to operate. Additional information is in there about Covington Water District.

3. Page 56. See revised and updated information.

If you have additional questions please contact Steve Lee directly at 253.867.0940 or email him at Steve.Lee@covingtonwater.com.

Sincerely,
COVINGTON WATER DISTRICT

Thomas Keown, P.E.
General Manager

cc: Chris Hall, General Manager – Lake Meridian Water District

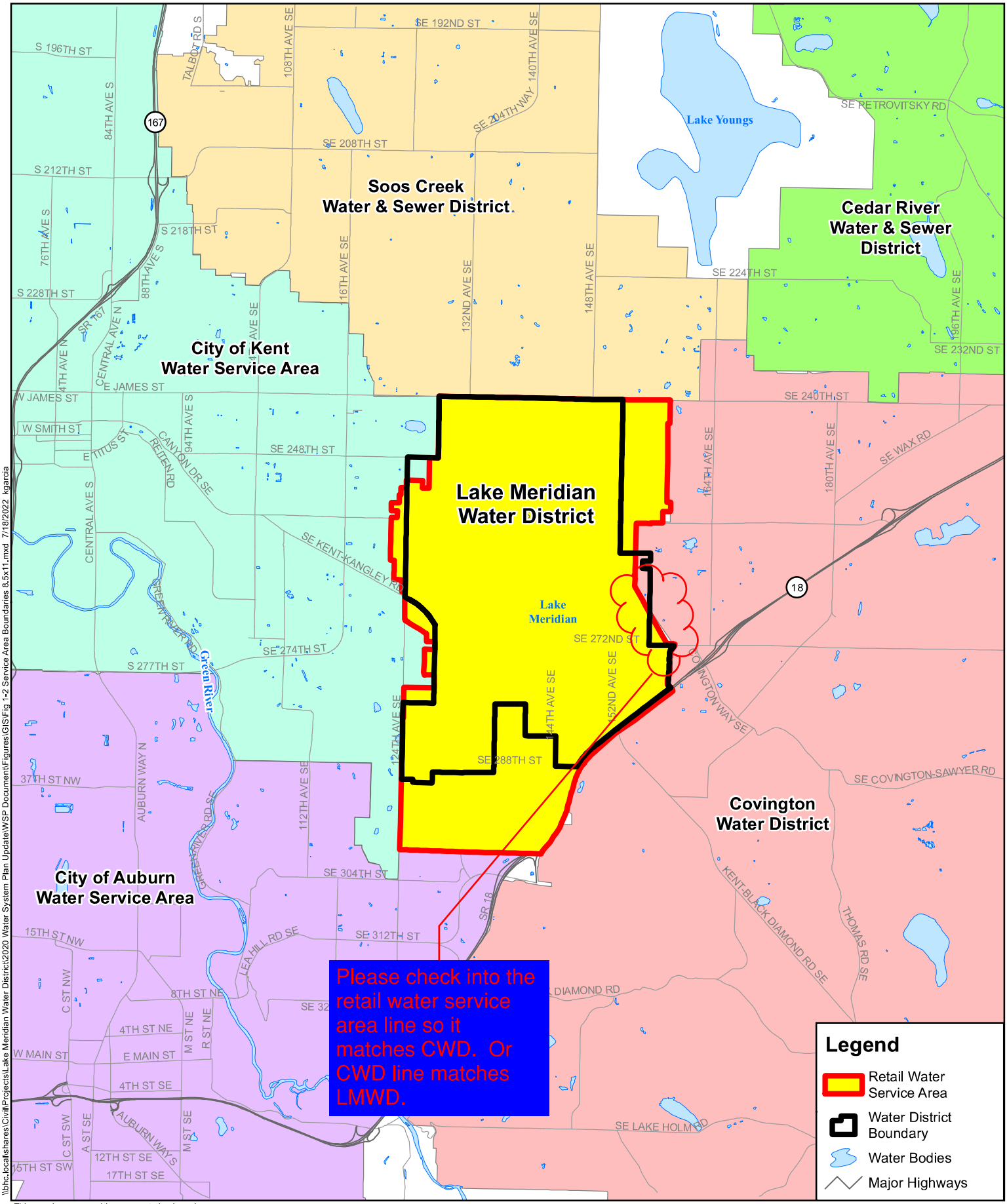

This map is a geographic representation based on information available. No warranty is made concerning the accuracy, currency, or completeness of data depicted on this map.

0 0.5 1 Miles

N

Water Service Area Boundaries

2022 Water System Plan Update
Lake Meridian Water District
July 2022

Figure **1-2**

COPYRIGHT © 2022 BHC CONSULTANTS LLC. ALL RIGHTS RESERVED

\\bhc.local\shares\Civil\Projects\Lake Meridian Water District\2020 Water System Plan Update\WSP Document\Figures\GIS\Fig 1-2 Service Area Boundaries 8.5x11.mxd 7/18/2022 kgarcia

9 pressure zones

1.7.4 Covington Water District

The Covington Water District is served by its own groundwater supply system, with six pressure zones and also ~~purchases water~~ from the Regional Water System Supply (RWSS). ~~As noted above, Covington has an intertie with the City of Auburn at the Lea Hill intertie site, located at 132nd Avenue SE and SE 304th Street but chose not to renew its water purchase agreement in 2010. This intertie is an emergency intertie and used solely as an emergency interim supply.~~

Covington has a 16-inch intertie with the District at 288th Street near State Highway 18. They also have an emergency flow intertie with the District at 15903 SE 272nd Street. As stated above, Covington took Auburn's place to become the primary supply source for the District in 2017, providing up to 2.2 MGD each year.

CWD is a partner within the RWSS Partnership that also includes Tacoma Public Utilities, Lakehaven Utility District & the City of Kent. The partnership jointly owns and mains the P5 pipeline from an intake and headworks on the Green River to service the partners and their wholesale customers. The RWSS in 2015 constructed the Green River Filtration Facility that filters water to the pipeline.

1.7.5 Related Plans

Hazard Mitigation Plan

The District's Hazard Mitigation Plan was approved by the Board of Commissioners on June 25, 2020. The Hazard Mitigation Plan provides a framework for understanding potential risks and responding to natural hazards in accordance with King County Emergency Management's mitigation plan monitoring and update process.

King County Comprehensive Plan – 1994 Plan with Updates Through 2020

The King County Comprehensive Plan (KC Plan) manages the projected growth within unincorporated King County by designating where growth will occur through policies, goals, plans and regulations. The KC Plan includes a land use map of unincorporated King County and a zoning map of projected growth. An urban growth boundary is also defined in the KC Plan to direct most of the projected growth into more urban areas.

City of Kent Comprehensive Plan

The City of Kent Comprehensive Plan (Kent Plan) was adopted in 1995. Subsequent updates have responded to local, regional, and statewide policy issues and development projects, significant annexations, and amendments to the Growth Management Act (GMA). The Kent Plan was updated in 2015, in accordance with the GMA periodic update cycle. As of 2004, the City served over 84,000 people covering 29.4 square miles. Most of the District's service area lies within Kent's city limits. Kent provides policy direction on coordinating with local utility providers to ensure consistency with its Comprehensive Plan.

South King County Regional Water Association Coordinated Water System Plan

The CWSP was developed in accordance with the "Coordination Act" (Chapter 70.116 RCW; WAC 248-56) for water utilities in the State to coordinate their planning and construction programs with other water utilities and local governments in the same geographic area. The CWSP was completed in October 1989. Service area boundaries were identified by each utility for capital improvement planning and service responsibility. Evaluation of source requirements and source availability was conducted. Future water supply was discussed as a part of the CWSP.

Soos Creek Water & Sewer District Water Comprehensive Plan

Soos Creek Water & Sewer District completed its Water Comprehensive Plan in 2014. Soos Creek receives its water from the City of Seattle at three locations. Two are on the Cedar River Pipeline and the third from a City pump station at Lake Youngs reservoir. The flow from the City reservoirs is by gravity to Soos Creek. The Plan provides information on its existing interties, including one with the District. It is a one-way system designed to provide emergency water supply and has not been activated since construction.

Soos Creek Water & Sewer District Sewer Comprehensive Plan

Soos Creek completed its most current Sewer Comprehensive Plan in 2012. Soos Creek serves approximately 92,500 people within 35 square miles. The District lies within a portion of Soos Creek's service area. Policies in the Soos Creek Sewer Comprehensive Plan provide coordination with adjacent jurisdictions and wastewater reuse facilities. While Soos Creek does not identify any reuse facilities with the District's service area, the District is in support of future discussions should the opportunity arise.

City of Kent 2019 Water System Plan

The most recent City of Kent Water System Plan was completed in 2019. The Kent water system service area covers approximately 23.7 square miles. The City maintains a system of supply, storage, and distribution mains to an estimated 68,157 people in 2016. Water demand is expected to increase by approximately 14 percent of 2016 demand by 2036. The City maintains supply and emergency interties with the City of Auburn, Covington Water District, Lake Meridian Water District, Highline Water District, City of Renton, Soos Creek Water & Sewer District, and City of Tukwila. The District overlaps with the Kent city limits in several areas.

City of Auburn 2015 Water Comprehensive Plan

was approved for a 10 year review cycle in Jan. 2017.

The City of Auburn has a Water Comprehensive Plan that was adopted in 2012 with a draft 2015 Water Comprehensive Plan under Agency Review. The City maintains a system of supply, storage, and distribution facilities to provide water service to more than 13,910 connections, serving a population of 56,000. The City maintains wholesale supply interties with adjacent water systems: the City of Algona, Covington Water District, King County Water District No. 111, the Muckleshoot Indian Tribe, and the Indian Health Service. The City's agreements, Interlocal Agreement No. 1 (IA1) and Interlocal Agreement No. (IA2), were negotiated in coordination with the King County Water District No. 111 and Covington Water District supplies. Tacoma Public Utilities constructed the Second Supply Pipeline Project, which runs through the north end of the City's RWSA. Several other entities, including the District, are part of this project.

Covington Water District 2016 Water Comprehensive Plan

and from it's partnership in the RWSS.

Covington Water District's 2016 Water Comprehensive Plan is currently in effect. Covington Water District is primarily served by its well system; ~~however, it has negotiated, in coordination with the District, additional supply from the City of Auburn with two interlocal agreements, IA1 and IA2.~~ Covington Water District is also participating in the City of Tacoma's Pipeline 5 Project for additional water supply. Covington Water District has one emergency intertie with the District that is used solely as an emergency interim supply. The District served approximately 50,000 people through 17,031 water connections at the end of 2013.

19,000 water connections at the end of 2022.

Soos Creek Water and Sewer District

THIS PAGE INTENTIONALLY BLANK.

Kevin Garcia

From: Jane Vandenberg <jvandenberg@sooscreek.com>
Sent: Saturday, February 4, 2023 9:25 AM
To: Madison McCrosky; Greg Hill
Cc: Brent Lewis; Ron Dorn; Kevin Garcia; Chris Hall
Subject: RE: Lake Meridian Water District - 2022 Water Comprehensive Plan - SCWSD Review [Filed 15 Feb 2023 10:49]

Categories: Filed by Mail Manager

> Some people who received this message don't often get email from jvandenberg@sooscreek.com. Learn why this is important

Hello Maddy,
Soos Creek has no comments or concerns regarding Lake Meridian Water District's 2022 Water Comprehensive Plan.

Regards,

Jane Vandenberg, PE
General Manager
253.630.9900 ext 102
jvandenberg@sooscreek.com
Soos Creek Water & Sewer District

From: Madison McCrosky <Madison.McCrosky@bhcconsultants.com>
Sent: Friday, February 3, 2023 3:53 PM
To: Jane Vandenberg <jvandenberg@sooscreek.com>; Greg Hill <GHill@sooscreek.com>
Cc: Brent Lewis <brent@lakemeridianwater.com>; Ron Dorn <Ron.Dorn@bhcconsultants.com>; Kevin Garcia <Kevin.Garcia@bhcconsultants.com>; Chris Hall <chall@lakemeridianwater.com>
Subject: RE: Lake Meridian Water District - 2022 Water Comprehensive Plan - SCWSD Review

Hello Jane and Greg:

I wanted to follow up to see if Soos Creek Water and Sewer District had any comments on Lake Meridian's Water Comprehensive Plan. The plan can be viewed at the SharePoint link below. Please forward any comments you may have no later than March 3, 2023. Alternatively, if there are no comments from Soos Creek please let us know and we will provide a copy of this correspondence in the WCP appendix.

LMWD 2022 Water Comprehensive Plan

Thank you,
Maddy

Madison McCrosky, PE
Project Engineer
p. 206.357.9952
d. 509.396.1200
e. Madison.McCrosky@bhcconsultants.com

From: Jane Vandenberg <jvandenberg@sooscreek.com>
Sent: Saturday, July 30, 2022 9:08 AM
To: Madison McCrosky <Madison.McCrosky@bhcconsultants.com>; Greg Hill <ghill@sooscreek.com>
Cc: Brent Lewis <brent@lakemeridianwater.com>; Ron Dorn <Ron.Dorn@bhcconsultants.com>; Kevin Garcia <Kevin.Garcia@bhcconsultants.com>; Chris Hall <chall@lakemeridianwater.com>
Subject: RE: Lake Meridian Water District - 2022 Water Comprehensive Plan - SCWSD Review [Filed 04 Aug 2022 16:03]

Madison,
Appreciate your sharing the draft. We will review and provide any comments back.
Respectfully,
Jane

Jane Vandenberg, PE
General Manager
253.630.9900 ext 102
jvandenberg@sooscreek.com
Soos Creek Water & Sewer District

From: Madison McCrosky <Madison.McCrosky@bhcconsultants.com>
Sent: Friday, July 29, 2022 4:15 PM
To: Jane Vandenberg <jvandenberg@sooscreek.com>; Greg Hill <GHill@sooscreek.com>
Cc: Brent Lewis <brent@lakemeridianwater.com>; Ron Dorn <Ron.Dorn@bhcconsultants.com>; Kevin Garcia <Kevin.Garcia@bhcconsultants.com>; Chris Hall <chall@lakemeridianwater.com>
Subject: Lake Meridian Water District - 2022 Water Comprehensive Plan - SCWSD Review

> You don't often get email from madison.mccrosky@bhcconsultants.com. Learn why this is important

Dear Ms. Vandenberg:

On behalf of Lake Meridian Water District, BHC Consultants, LLC is transmitting a copy of the draft *Lake Meridian Water District Comprehensive Plan*, dated July 2022, and a copy of the partially completed DOH Form 331-568 (Local Government Consistency Determination Form) through the following SharePoint link: LMWD 2022 Water Comprehensive Plan

We request that you conduct your review and respond to us with any comments within 60 days.

If you have any questions or wish to discuss further, please don't hesitate to contact Chris Hall (Lake Meridian Water District General Manager) at (253) 631-3770 or chall@lakemeridianwater.com or me at (206) 357-9952 or Madison.McCrosky@bhcconsultants.com.

Sincerely,

Madison McCrosky, PE
Project Manager
p. 206.357.9952
d. 509.396.1200
e. Madison.McCrosky@bhcconsultants.com

1601 Fifth Avenue Suite 500
Seattle, Washington 98101
www.bhcconsultants.com

We're hiring! Visit our careers page here.

Offices in Seattle, Tacoma, and Bellingham.

This email and all attachments are confidential. For further information about emails sent to or from BHC Consultants or if you have received this email in error, please refer to http://bhcconsultants.com/disclaimer/

THIS PAGE INTENTIONALLY BLANK.

Tacoma Water

THIS PAGE INTENTIONALLY BLANK.

Kevin Garcia

From: Reisinger, Daniel <DReisinger@cityoftacoma.org>
Sent: Tuesday, March 7, 2023 12:31 PM
To: Madison McCrosky
Cc: Ron Dorn; Kevin Garcia; Brent Lewis; Chris Hall
Subject: RE: Lake Meridian Water System Plan Review - Tacoma Water Review [Filed 07 Mar 2023 12:58]
Attachments: Tacoma Wate Letter.pdf; 331-568 - Local Government Cont. Dert. Form Tacoma Water.docx.pdf

Categories: Filed by Mail Manager

> Some people who received this message don't often get email from dreisinger@cityoftacoma.org. Learn why this is important

Madison,

Thank you for your patience. Tacoma Water has no comments on Lake Meridian WD's Water System Plan. It is a well organized Plan that accurately describes our intertie and available water supply based on our 2002 contract. Attached are electronic versions of a signed letter and Local Government Consistency form tomorrow. Please let me know if you would like us to mail you physical copies.

Please let me know if you have any questions.

Thanks again,
Dan

Daniel L Reisinger
Tacoma Water | Planning & Engineering
M: (253) 316-2477
dreisinger@cityoftacoma.org

From: Reisinger, Daniel
Sent: Tuesday, February 21, 2023 2:59 PM
To: Madison McCrosky <Madison.McCrosky@bhcconsultants.com>
Cc: Ron Dorn <Ron.Dorn@bhcconsultants.com>; Kevin Garcia <Kevin.Garcia@bhcconsultants.com>; Brent Lewis <brent@lakemeridianwater.com>; Chris Hall <chall@lakemeridianwater.com>
Subject: RE: Lake Meridian Water System Plan Review - Tacoma Water Review

Madison,

Thanks for following up. I am still coordinating our review internally and will provide a response by March 3rd. To date, we do not have substantial comments.

Hope that helps,
Dan

Daniel L Reisinger

Tacoma Water | System & Asset Planning
M: (253) 316-2477
dreisinger@cityoftacoma.org

From: Madison McCrosky <Madison.McCrosky@bhcconsultants.com>
Sent: Tuesday, February 21, 2023 2:20 PM
To: Reisinger, Daniel <DReisinger@cityoftacoma.org>
Cc: Ron Dorn <Ron.Dorn@bhcconsultants.com>; Kevin Garcia <Kevin.Garcia@bhcconsultants.com>; Brent Lewis <brent@lakemeridianwater.com>; Chris Hall <chall@lakemeridianwater.com>
Subject: RE: Lake Meridian Water System Plan Review - Tacoma Water Review

Hello Dan,

I am following up on my email from last month regarding review of the Lake Meridian Water System Plan.

Please respond with any comments from Tacoma Water no later than March 3, 2023. Let us know if there are any questions or additional information that you may need in order to complete your review.

Thanks,

Madison McCrosky, PE
Project Engineer
p. 206.357.9952
d. 509.396.1200
e. Madison.McCrosky@bhcconsultants.com

From: Washington, Michael <MWashing@cityoftacoma.org>
Sent: Wednesday, January 11, 2023 10:00 AM
To: Madison McCrosky <Madison.McCrosky@bhcconsultants.com>
Cc: Ron Dorn <Ron.Dorn@bhcconsultants.com>; Kevin Garcia <Kevin.Garcia@bhcconsultants.com>; Brent Lewis <brent@lakemeridianwater.com>; Chris Hall <chall@lakemeridianwater.com>; Reisinger, Daniel <DReisinger@cityoftacoma.org>
Subject: RE: Lake Meridian Water System Plan Review - Tacoma Water Review [Filed 11 Jan 2023 10:01]

Madison,

I promoted into a new position at Water so I am forwarding the final review of the Lake Meridian Water District Comprehensive Plan to Dan Reisinger who can take the lead on providing any comments. Dan is ccd in this email.

Thanks.

Michael L. Washington, P.E.
Project Delivery Manager
Tacoma Water
Planning and Engineering Section
Cell (253) 377-0957
mwashing@cityoftacoma.org

From: Madison McCrosky <Madison.McCrosky@bhcconsultants.com>
Sent: Tuesday, January 10, 2023 1:17 PM
To: Washington, Michael <MWashing@cityoftacoma.org>
Cc: Ron Dorn <Ron.Dorn@bhcconsultants.com>; Kevin Garcia <Kevin.Garcia@bhcconsultants.com>; Brent Lewis <brent@lakemeridianwater.com>; Chris Hall <chall@lakemeridianwater.com>
Subject: RE: Lake Meridian Water System Plan Review - Tacoma Water Review

Hello Michael:

I am following up on my email from August regarding the Lake Meridian Water District 2022 Water Comprehensive Plan.

On behalf of Lake Meridian Water District, BHC Consultants, LLC is transmitting a copy of the draft *Lake Meridian Water District Comprehensive Plan*, dated August 4, 2022 through the following SharePoint link:

LMWD 2022 Water Comprehensive Plan

Please respond to us with any comments within 30 days. If you have any questions or wish to discuss further, please don't hesitate to contact Chris Hall at (253) 631-3770 or chall@lakemeridianwater.com or me at (206) 357-9952 or Madison.McCrosky@bhcconsultants.com.

Thanks,

Madison McCrosky, PE
Project Engineer
p. 206.357.9952
d. 509.396.1200
e. Madison.McCrosky@bhcconsultants.com

From: Madison McCrosky
Sent: Thursday, August 4, 2022 4:09 PM
To: Washington, Michael <MWashing@cityoftacoma.org>
Cc: Ron Dorn <Ron.Dorn@bhcconsultants.com>; Kevin Garcia <Kevin.Garcia@bhcconsultants.com>; Brent Lewis <brent@lakemeridianwater.com>; Chris Hall <chall@lakemeridianwater.com>
Subject: RE: Lake Meridian Water System Plan Review - Tacoma Water Review [Filed 04 Aug 2022 16:09]

Hello Michael:

I wanted to let you know that we had some issues with our PDF software when we tried to reduce the file size that caused some readability issues with figures included in the Comprehensive Plan Document submitted last week.

I have reuploaded the WCP to the SharePoint with today's date, 8-4-2022. The only change was corrections to the readability of the figures. The previous file has been deleted. Please let me know if you have any issues with the document in the folder now. Thank you for your understanding.

Thanks,

Madison McCrosky, PE
Project Engineer
p. 206.357.9952

d. 509.396.1200
e. Madison.McCrosky@bhcconsultants.com

From: Madison McCrosky
Sent: Friday, July 29, 2022 4:15 PM
To: Washington, Michael <MWashing@cityoftacoma.org>
Cc: Ron Dorn <Ron.Dorn@bhcconsultants.com>; Kevin Garcia <Kevin.Garcia@bhcconsultants.com>; Brent Lewis <brent@lakemeridianwater.com>; Chris Hall <chall@lakemeridianwater.com>
Subject: RE: Lake Meridian Water System Plan Review - Tacoma Water Review [Filed 29 Jul 2022 16:15]

Dear Mr. Washington,

On behalf of Lake Meridian Water District, BHC Consultants, LLC is transmitting a copy of the draft *Lake Meridian Water District Comprehensive Plan*, dated July 2022, and a copy of the partially completed DOH Form 331-568 (Local Government Consistency Determination Form) through the following SharePoint link: LMWD 2022 Water Comprehensive PlanWe request that you conduct your review and respond to us with any comments within 60 days.

If you have any questions or wish to discuss further, please don't hesitate to contact Chris Hall (Lake Meridian Water District General Manager) at (253) 631-3770 or chall@lakemeridianwater.com or me at (206) 357-9952 or Madison.McCrosky@bhcconsultants.com.

Sincerely,
Madison McCrosky, PE
Project Manager
p. 206.357.9952
d. 509.396.1200
e. Madison.McCrosky@bhcconsultants.com

From: Washington, Michael <MWashing@cityoftacoma.org>
Sent: Tuesday, July 26, 2022 12:59 PM
To: Madison McCrosky <Madison.McCrosky@bhcconsultants.com>; Kevin Garcia <Kevin.Garcia@bhcconsultants.com>
Subject: RE: Lake Meridian Water System Plan Review

Madison,
We will review the information and get you a response.

Thank you.

Michael L. Washington, P.E.
Principal Engineer
Tacoma Water
Planning and Engineering Section
Phone (253) 502-8862
Cell (253) 377-0957
Fax (253) 396-3377

From: Madison McCrosky <Madison.McCrosky@bhcconsultants.com>
Sent: Tuesday, July 26, 2022 12:33 PM

To: Washington, Michael <MWashing@cityoftacoma.org>; Kevin Garcia <Kevin.Garcia@bhcconsultants.com>
Subject: RE: Lake Meridian Water System Plan Review

Hello Michael,

We will send an electronic copy of the plan hopefully later this week.

Our anticipated review timeline is 60-90 days from receipt of the plan. We will need the Local Government Consistency Determination Form (which will be provided electronically with the plan) completed by Tacoma Water in order to submit our final, revised plan to DOH.

Thanks,

Madison McCrosky, PE
Project Engineer
p. 206.357.9952
d. 509.396.1200
e. Madison.McCrosky@bhcconsultants.com

From: Washington, Michael <MWashing@cityoftacoma.org>
Sent: Tuesday, July 26, 2022 7:47 AM
To: Kevin Garcia <Kevin.Garcia@bhcconsultants.com>
Cc: Madison McCrosky <Madison.McCrosky@bhcconsultants.com>
Subject: FW: Lake Meridian Water System Plan Review
Importance: High

Good morning Kevin.

Can you please send me an electronic copy of Lake Meridian's Water System Plan for review? Also, I am curious what you timeline is for having responses back?

Thanks.

Michael L. Washington, P.E.
Principal Engineer
Tacoma Water
Planning and Engineering Section
Phone (253) 502-8862
Cell (253) 377-0957
Fax (253) 396-3377

From: Siebert, Tosha <TSiebert@cityoftacoma.org>
Sent: Thursday, July 21, 2022 1:31 PM
To: Washington, Michael <MWashing@cityoftacoma.org>; Moline, Jason <JMoline@cityoftacoma.org>
Cc: Knickerbocker, Jessica <JKnicker@cityoftacoma.org>; George, Glen <GGeorge1@cityoftacoma.org>
Subject: FW: Lake Meridian Water System Plan Review
Importance: High

Hi Jason, my apologies for the late reply. This will definitely be a System Planning responsibility. And per our conversation, Michael will be the contact that they should submit their plan to for review. Michael is out until Tuesday and will respond then.

Michael, please don't hesitate to reach out to Jason for support as he worked on the System Plan last go around and recalled having to do this as part of his previous efforts.

I have also included Jessica and Glen to be sure we are all on the same page since I will be out until August 8th.

Thanks,

Tosha Siebert
253-878-2323

From: Moline, Jason <JMoline@cityoftacoma.org>
Sent: Wednesday, July 20, 2022 2:30 PM
To: Siebert, Tosha <TSiebert@cityoftacoma.org>
Subject: FW: Lake Meridian Water System Plan Review

Hi Tosha,

I would like to talk about the email string below when you have a chance. In short, the consultant for Lake Meridian Water District is asking for our contact to review Water System Plans from other utilities, and it seems like your group is the best fit to lead this effort.

Thanks!
Jason M.

From: Pennington, Heather <hpenning@cityoftacoma.org>
Sent: Wednesday, July 20, 2022 1:47 PM
To: Moline, Jason <JMoline@cityoftacoma.org>
Subject: RE: Lake Meridian Water System Plan Review

My thought is that it belongs in Planning of Planning and Engineering. I'd start by talking with Tosha – perhaps she is the contact initially and delegates it over time as she becomes more familiar.

~ Heather

From: Moline, Jason <JMoline@cityoftacoma.org>
Sent: Wednesday, July 20, 2022 1:33 PM
To: Pennington, Heather <hpenning@cityoftacoma.org>
Subject: FW: Lake Meridian Water System Plan Review

Hi Heather,

Water District 111's consultant asked me for our contact to review Water System Plans from other utilities. I was wondering if you knew who (or which group) this would be now. Thank you!

Jason

From: Powell, Marc <mpowell@cityoftacoma.org>
Sent: Wednesday, July 20, 2022 11:41 AM
To: Moline, Jason <JMoline@cityoftacoma.org>
Subject: RE: Lake Meridian Water System Plan Review

Jodi suggested asking Heather P.

From: Powell, Marc
Sent: Wednesday, July 20, 2022 11:31 AM
To: Moline, Jason <JMoline@cityoftacoma.org>
Subject: RE: Lake Meridian Water System Plan Review

I have been asked to review water system plans before but I wouldn't say I am the contact.

I would suggest Greg V. or Craig D.

-Marc

From: Moline, Jason <JMoline@cityoftacoma.org>
Sent: Wednesday, July 20, 2022 11:26 AM
To: Powell, Marc <mpowell@cityoftacoma.org>
Subject: FW: Lake Meridian Water System Plan Review

Hi Marc,

Could you let me know if you are our contact for reviewing Water System Plans from other utilities? I wasn't sure, and Glen suggested I ask you about this.

Thank you,
Jason

Jason Moline, P.E. | Tacoma Water
Planning & Engineering | Water Resources
3628 S 35th St, Tacoma, WA 98409
C: (253) 344-6601 | E: jmoline@cityoftacoma.org

From: Kevin Garcia <Kevin.Garcia@bhcconsultants.com>
Sent: Monday, July 18, 2022 12:24 PM
To: Moline, Jason <JMoline@cityoftacoma.org>
Cc: Madison McCrosky <Madison.McCrosky@bhcconsultants.com>
Subject: Lake Meridian Water System Plan Review

Hello Jason,

My name is Kevin Garcia from BHC Consultants. We are updating the Water System Plan (WSP) for Lake Meridian Water District. As part of the submittal process to DOH, we will need to send an electronic copy to Tacoma Public Utilities for review and to confirm the plan is consistent with local comprehensive plans, land use plans and development regulations. Could you provide me the name and contact information (email) of the person reviewing WSP?

Thank you,

Kevin Garcia, EIT

Staff Engineer
m. 253.344.5598
e. kevin.garcia@bhcconsultants.com

950 Pacific Avenue Suite 905
Tacoma, Washington 98402
www.bhcconsultants.com

We're hiring! Visit our careers page here.

This email and all attachments are confidential. For further information about emails sent to or from BHC Consultants or if you have received this email in error, please refer to http://bhcconsultants.com/disclaimer/

TACOMA WATER

3628 South 35th Street
Tacoma, Washington 98409-3192

TACOMA PUBLIC UTILITIES

March 7, 2023

Lake Meridian Water District
27224 144th Ave SE
Kent, WA 98042

Mr. Hall,

Thank you for the opportunity to review the Lake Meridian Water System Plan, Tacoma Water has no additional comments on the Plan.

Enclosed is the signed Local Government Accountability form for your records.

Thank you,

DocuSigned by:
Daniel Resinger
Daniel Resinger
Tacoma Water
Planning & Engineering

Washington State Department of Health
Division of Environmental Health
Office of Drinking Water

Local Government Consistency Determination Form

Water System Name: LAKE MERIDIAN WATER DISTRICT PWS ID: 41900B

Planning/Engineering Document Title: 2022 WATER COMPREHENSIVE PLAN Plan Date: 07/29/2022

Local Government with Jurisdiction Conducting Review: City of Tacoma, Tacoma Public Utilities, Water Division (Tacoma Water)

Before the Department of Health (DOH) approves a planning or engineering submittal under Section 100 or Section 110, the local government must review the documentation the municipal water supplier provides to prove the submittal is consistent with **local comprehensive plans, land use plans and development regulations** (WAC 246-290-108). Submittals under Section 105 require a local consistency determination if the municipal water supplier requests a water right place-of-use expansion. The review must address the elements identified below as they relate to water service.

By signing this form, the local government reviewer confirms the document under review is consistent with applicable local plans and regulations. If the local government reviewer identifies an inconsistency, he or she should include the citation from the applicable comprehensive plan or development regulation and explain how to resolve the inconsistency, or confirm that the inconsistency is not applicable by marking N/A. See more instructions on reverse.

	For use by water system	For use by local government
Local Government Consistency Statement	**Identify the page(s) in submittal**	**Yes or Not Applicable**
a) The water system service area is consistent with the adopted land use and zoning within the service area.	2-1 TO 2-3	Not Applicable
b) The growth projection used to forecast water demand is consistent with the adopted city or county's population growth projections. If a different growth projection is used, provide an explanation of the alternative growth projection and methodology.	2-5 TO 2-6	Not Applicable
c) For cities and towns that provide water service: All water service area policies of the city or town described in the plan conform to all relevant utility service extension ordinances.	3-2 TO 3-4	Not Applicable
d) Service area policies for new service connections conform to the adopted local plans and adopted development regulations of all cities and counties with jurisdiction over the service area.	3-4 TO 3-5	Not Applicable
e) Other relevant elements related to water supply are addressed in the water system plan, if applicable. This may include Coordinated Water System Plans, Regional Wastewater Plans, Reclaimed Water Plans, Groundwater Management Area Plans, and the Capital Facilities Element of local comprehensive plans.	3-14	Yes

I certify that the above statements are true to the best of my knowledge and that these specific elements are consistent with adopted local plans and development regulations.

DocuSigned by:
Daniel Reisinger
D71863C1AF78469...

Signature

01/31/2023

Date

Daniel, Reisinger, Tacoma Water, System Planning Engineering Supervisor

Printed Name, Title, & Jurisdiction

Consistency Review Guidance

For Use by Local Governments and Municipal Water Suppliers

This checklist may be used to meet the requirements of WAC 246-290-108. When using an alternative format, it must describe all of the elements; 1a), b), c), d), and e), when they apply.

For **water system plans (WSP)**, a consistency review is required for the service area and any additional areas where a municipal water supplier wants to expand its water right's place of use.

For **small water system management programs**, a consistency review is only required for areas where a municipal water supplier wants to expand its water right's place-of-use. If no water right place-of-use expansion is requested, a consistency review is not required.

For **engineering documents,** a consistency review is required for areas where a municipal water supplier wants to expand its water right's place-of-use (water system plan amendment is required). For noncommunity water systems, a consistency review is required when requesting a place-of-use expansion. All engineering documents must be submitted with a service area map (WAC 246-290-110(4)(b)(ii)).

A) Documenting Consistency: The planning or engineering document must include the following when applicable.

a) A copy of the adopted **land use/zoning** map corresponding to the service area. The uses provided in the WSP should be consistent with the adopted land use/zoning map. Include any other portions of comprehensive plans or development regulations that relate to water supply planning.

b) A copy of the **growth projections** that correspond to the service area. If the local population growth projections are not used, explain in detail why the chosen projections more accurately describe the expected growth rate. Explain how it is consistent with the adopted land use.

c) Include water service area policies and show that they are consistent with the **utility service extension ordinances** within the city or town boundaries. *This applies to cities and towns only.*

d) All **service area policies** for how new water service will be provided to new customers.

e) **Other relevant elements** the Department of Health determines are related to water supply planning. See Local Government Consistency – Other Relevant Elements, Policy B.07, September 2009.

B) Documenting an Inconsistency: Please document the inconsistency, include the citation from the comprehensive plan or development regulation, and explain how to resolve the inconsistency.

C) Documenting a Lack of Local Review for Consistency: Where the local government with jurisdiction did not provide a consistency review, document efforts made and the amount of time provided to the local government for review. Please include: name of contact, date, and efforts made (letters, phone calls, and emails). To self-certify, please contact the DOH Planner.

The Department of Health is an equal opportunity agency. For persons with disabilities, this document is available on request in other formats. To submit a request, please call 1-800-525-0127 (TTY 1-800-833-6388).

Appendix C

Approvals

THIS PAGE INTENTIONALLY BLANK.

Print Story
Close Window

Water Comprehensive Plan Public Meeting Notification
Thursday, March 16, 2023

Pursuant to WAC 246-290-100(8), notice is hereby given by the Lake Meridian Water District Board of Commissioners that a public hearing will be held on Thursday, March 23, 2023, at 10:00 a.m. or as soon thereafter as can be heard at the District office. The purpose of the public hearing is to receive public comment on the proposed Water Comprehensive Plan.

¤

Top of Page
Close Window

Copyright © 2004-2023 - Lake Meridian Water District
All rights reserved.

Meeting Minutes
of the
Board of Commissioners
Lake Meridian Water District
Regular Meeting on **March 23, 2023, 10:00 a.m.**

The Board meeting of Lake Meridian Water District was held.

Commissioners Hanis, Wilson, and Cline, along with District staff Chris Hall and Brent Lewis, general counsel Curtis Chambers, and consultant engineers Maddy McCrosky and Greg Hill met for a regular meeting to consider all business that may come before the Board.

Additions & Changes to the Agenda

Add part-time employee update. Manager advised the Board that the District is hiring a part-time temporary employee to assist with finance.

Schedule a special meeting on April 20, 2023, at 10:00 a.m with an executive session pursuant to RCW 42.30.110(1)(g) to review the performance of a public employee.

Task Order 25 was removed from the Engineer's Report.

Consumers & Public Comment

None

Water System Plan

Water System Plan – a public meeting, which was properly noticed, was held pursuant to WAC 246-290-100(8), and the public was invited to provide comments on the District's proposed 2023 Water Comprehensive Plan. No public comment was given.

Water System Plan – adoption of Resolution #680-03-23. Engineer McCrosky provided a presentation of the district's proposed 2023 Water Comprehensive Plan, after which both she and staff recommended the district adopt the 2023 Water Comprehensive Plan as proposed. Commissioner Wilson moved to adopt Resolution 680-03-23 as presented. Commissioner Cline seconded the motion, and it passed unanimously.

Attorney Report

None

Engineer's Report

Engineer McCrosky provided a presentation related to Task Order 15A. After discussion of the same, Commissioner Wilson moved to approve Task Order 15A and authorize the District Manager to sign the same. Commissioner Hanis seconded the motion, and it passed unanimously.

Engineer McCrosky provided a presentation related to Task Order 16A. After discussion of the same, Commissioner Wilson moved to approve Task Order 16A and authorize the District Manager to sign the same. Commissioner Cline seconded the motion, and it passed unanimously.

Operation's Report

Brent Lewis gave a presentation on the proposed revised Cross Connection Control Program Manual. After discussion on the same, Commissioner Cline moved to adopt the revised Cross Connection Control Program Manual pursuant to Resolution 678-03-23. Commissioner Wilson seconded the motion, and it passed unanimously.

An update on equipment purchases was given. The forklift and vac trailer delivery dates have been delayed again.

Water Service Tech 1 new hire update was given.

Job posting update was given.

DE update was given.

Manager's Report

Well 6 updates were given.

Kent services area agreement update was given.

Scheduling a meeting to discuss the employee handbook was moved to the next meeting.

1400 Reservoir storm drainage update was given.

Approval of Minutes

On motion made, seconded, and approved unanimously, the minutes of the following meetings were approved:

March 9, 2023

Leak Credits

On motion duly made, seconded, and carried unanimously, the following leak credits were approved:

$621.96	Account #690024	25222 129th Pl SE, Kent
$334.97	Account #090110	14308 SE 272nd, Kent
$333.40	Account #690068	25055 128th Pl SE, Kent
$242.19	Account #060004	14402 SE 274th Ct., Kent
$227.39	Account #560426	12648 SE 282nd, Kent
$200.51	Account #050262	15321 SE 276th Pl, Kent
$143.83	Account #020136	14404 SE 266th, Kent
$2,619.40	Account #690010	25409 128th Pl SE, Kent[1]

Approval of Vouchers

Vouchers audited and certified by the auditing officer as required by RCW 42.24.080, and those expense reimbursement claims certified as required by RCW 42.24.090, have been recorded on a listing, and were submitted to the Board for approval. As of this date the Board, by unanimous vote, does approve for payment those vouchers included in the following list and further described as follows.

Vendors	20560 – 20589	$195,884.86

The meeting was adjourned at 12:02 p.m.

BOARD OF COMMISSIONERS
LAKE MERIDIAN WATER DISTRICT

_____
Patrick M. Hanis, President

_____
Charles E. Wilson, Secretary

_____
Gary G. Cline, Commissioner

[1] No leak credit will be considered from this account for 36 months from the approval of this leak credit. Staff is directed to make the necessary notation of such in the District's records.

LAKE MERIDIAN WATER DISTRICT
KING COUNTY, WASHINGTON

RESOLUTION NO. 680-03-23

RESOLUTION OF THE BOARD OF COMMISSIONERS OF LAKE MERIDIAN WATER DISTRICT, KING COUNTY, WASHINGTON, APPROVING AND ADOPTING THE 2023 COMPREHENSIVE WATER SYSTEM PLAN.

WHEREAS, Lake Meridian Water District (District) is a municipal corporation providing water utility services pursuant to Title 57 RCW; and

WHEREAS, RCW 57.16.010 authorizes and requires the District to adopt a general comprehensive water system plan and the District has previously done so by the adoption of the 2008 Comprehensive Water System Plan on May 28, 2009 by Resolution No. 543-05-09, and as such plan was amended by Resolution No. 606-06-16 on June 23, 2016 (2016 Comprehensive Plan Extension); and

WHEREAS, state law and administrative regulation, including WAC 246-290-100, require that the District's comprehensive water system plan be updated periodically and the District Board of Commissioners previously approved an updated and revised comprehensive water system plan entitled 2016 Water Comprehensive Plan Extension (also referred to as the 2008 Water Comprehensive Plan) which was prepared by Roth Hill Engineering Partners, LLC, the District's then consulting engineers, by the adoption of Resolution No. 606-06-16 on June 23, 2016; and

WHEREAS, BHC Consultants, the District's current consulting engineers (Consulting Engineers), prepared an updated water comphrensive plan for the District titled 2023 Water Comprehensvie Plan; and

WHEREAS, the District by and through William C. Hall, the District Manager and Responsible SEPA Official (Responsible SEPA Official), complied with the State Environmental Policy Act relative to the adoption of the 2023 Water Comprehensive Plan through the issuance of a determination of non-significance and, after a public comment period, the District Responsible SEPA Official having determined to retain the DNS; and

WHEREAS, the District has complied with all other notice and public meeting requirements to adopt the 2023 Water Comprehensive Plan, including holding a Water Use Efficiency Goals public meeting on March 9, 2023, and a Water Comprehensive Plan informational meeting on March 23, 2023; and

WHEREAS, the District Board of Commissioners now desires to adopt and approve the 2023 Water Comprehensive Plan subject to certain future amendments as may

be required by King County, the Washington State Department of Health (DOH), the Cities of Auburn, Covington, and Kent, and other public agencies with jurisdiction as provided and required by RCW 57.16.010 and other laws; now, therefore,

BE IT RESOLVED, by the Board of Commissioners of Lake Meridian Water District, King County, Washington, as follows:

1. The 2023 Water Comprehensive Plan which is fully incorporated herein by this reference is hereby adopted and approved as the District's Comprehensive Water System Plan effective the date set forth below.

2. Pursuant to RCW 57.16.010, District staff and the Consulting Engineers are authorized and directed to implement the 2023 Water Comprehensive Plan as authorized by law and adopted District resolutions, policies and procedures.

ADOPTED by the Board of Commissioners of Lake Meridian Water District, King County, Washington, at a regular open public meeting held on the 23rd day of March, 2023.

BOARD OF COMMISSIONERS
LAKE MERIDIAN WATER DISTRICT

By:_____
Patrick M. Hanis, President and Commissioner

By: Charles E. Wilson
Charles E. Wilson, Secretary and Commissioner

By:_____
Gary G. Cline, Commissioner

Appendix D

Service Agreements

THIS PAGE INTENTIONALLY BLANK.

JURISDICTION DIVIDER

City of Auburn

KING COUNTY WATER DISTRICT NO. 111

RESOLUTION NO. 131-10-78

A RESOLUTION of the Board of Commissioners of King County Water District No. 111 amending, in part Resolution No. 127-8-78 authorizing the Commissioners to enter into agreements with adjacent districts and municipalities supplying water confirming the service areas between Water District No. 111 and said adjacent districts.

WHEREAS, King County Water District No. 111 has previously adopted Resolution No. 127-8-78 describing certain service areas of the Water District and adjacent suppliers of water; and

WHEREAS, the service area boundary between King County Water District No. 111 and the city of Auburn has been revised since adoption of the above referenced resolution; and

WHEREAS, it is necessary to revise said resolution insofar as it is applicable to the boundary between Water District No. 111 and the city of Auburn,

RESOLVED that the Commissioners are authorized and instructed to enter into an agreement with the city of Auburn, confirming and establishing the following service area boundary between the two districts:

Beginning at the intersection of a line which is 330 feet south of and parallel with the south line of Section 3, Township 21 North, Range 5 East, W.M. with the northwesterly margin of S.R. 18; thence west along a line which is 330 feet south of, and parallel with, the north line of Sections 3 and 4, to the west line of the northeast one quarter of said Section 4.

Insofar as Resolution No. 127-8-78 is inconsistent with the provisions of this resolution, it is superseded.

ADOPTED at a regular meeting of the Board of Commissioners of King County Water District No. 111 the 26th day of October, 1978.

Gary G. Cline, Commissioner

Robert R. Sparks, Commissioner

Charles E. Wilson, Commissioner

AGREEMENT ESTABLISHING USE AND SERVICE AREAS OF THE PARTIES

AGREEMENT between King County Water District No. 111, a special purpose District of the State of Washington, hereinafter called "District", and the City of Auburn, a municipal corporation of the State of Washington, hereinafter called "City".

1. Purpose. The District and the City have previously entered into an "Agreement Establishing Use and Service Areas of the Parties" on November 9, 1978. The parties now desire to revise said agreement and establish a new boundary between their respective service areas.

2. Agreement. It is hereby agreed between the parties that the boundary between the area served by each shall be as follows:

> Beginning at the intersection of the North line of Section 3, Township 21 North, Range 5 East, W.M., with the Northwesterly margin of Primary State Highway No. 2 (SR 18);
> Thence Southwesterly along said Northwesterly margin to its intersection with the South line of the North 1/2 of the South 1/2 of said Section 3;
> Thence Westerly along said South line, and the South line of the North 1/2 of the South 1/2 of Section 4, Township 21 North, Range 5 East, W.M., to its intersection with the West line of the East 1/2 of the East 1/2 of the East 1/2 of the West 1/2 of said Section 4;
> Thence Northerly along said West line to the North line of said Section 4;
> Thence Easterly along said North line of said Section 4 to the Northeast corner of the West 1/2 of said Section 4, and the terminus of the service area boundary line description.

AGREEMENT ESTABLISHING USE AND

SERVICE AREAS OF THE PARTIES

AGREEMENT between King County Water District No. 111, a special purpose district of the state of Washington, hereinafter called "District," and the City of Auburn, a municipal corporation of the state of Washington, hereinafter called "City."

1. Purpose. The District and the City have previously informally agreed to the establishment of a boundary between the service areas of the two parties and are now desirous of confirming the previous understanding and agreement in writing.

2. Agreement. It is hereby agreed between the parties that the boundary between the areas served by each of the parties shall be as follows:

> Beginning at the intersection of a line which is 330 feet south of and parallel with the north line of Section 3, Township 21 North, Range 5 East, W.M. with the northwesterly margin of S.R. 18; thence west along a line which is 330 feet south of, and parallel with, the north line of Sections 3 and 4, to the west line of the northeast one quarter of said Section 4.

District shall serve the area lying generally north of said boundary line and City shall serve the area lying generally south of said boundary line.

DATED: _____, 1978.

KING COUNTY WATER DISTRICT NO. 111

By _____
Gary G. Cline, Commissioner

By _____
Robert R. Sparks, Commissioner

By _____
Charles E. Wilson, Commissioner

CITY OF AUBURN

By Stanley P. Kersey
Mayor

By Coralee A. McConnehey
Clerk

KING COUNTY WATER DISTRICT NO. 111
RESOLUTION NO. 157-10-80

A RESOLUTION of the Board of Commissioners of King County Water District No. 111 authorizing the commissioners to enter into a revised agreement with the City of Auburn establishing the service area boundary between Water District No. 111 and the City of Auburn.

WHEREAS, King County Water District No. 111, "District" herein, under authority of Resolution 127-8-78 has previously entered into an "Agreement Establishing Use and Service Areas of the Parties" with the City of Auburn, "City" herein, dated November 9, 1978; and

WHEREAS, the District and the City are now desirous of revising said boundary to enable more efficient service of potential customers, and

WHEREAS the City and the District agree that it would be to their mutual benefit and to the benefit of potential customers to revise said boundary,

NOW THEREFORE, it is hereby resolved that the Commissioners of the District are authorized and instructed to enter into an "Agreement Establishing Use and Service Areas of the Parties" in a form substantially the same as Exhibit A attached hereto and by this reference incorporated herein, with the City to establish the following service area boundary between the City and the District:

Beginning at the intersection of the North line of Section 3, Township 21 North, Range 5 East, W.M., with the Northwesterly margin of Primary State Highway No. 2 (SR 18);
Thence Southwesterly along said Northwesterly margin to its intersection with the South line of the North 1/2 of the South 1/2 of said Section 3;
Thence Westerly along said South line, and the South line of the North 1/2 of the South 1/2 of Section 4, Township

21 North, Range 5 East, W.M., to its intersection with the West line of the East 1/2 of the East 1/2 of the East 1/2 of the West 1/2 of said Section 4;
Thence Northerly along said West line to the North line of said Section 4;
Thence Easterly along said North line of said Section 4 to the Northeast corner of the West 1/2 of said Section 4, and the terminus of the service area boundary line description.

The District shall service the area north of said boundary and the City shall service the area south of said boundary.

The above described boundary shall become the boundary between the District and the City upon execution of the subject agreement by the City and upon approval of said revision by the King County Boundary Review Board.

Insofar as Resolution #127-8-78 is inconsistent with the foregoing, it is hereby repealed and revoked and superceded by the provisions of this Resolution.

ADOPTED at a regular meeting of the Board of Commissioners of King County Water District No. 111 the 23rd day of October, 1980.

Gary G. Cline, Commissioner

Robert R. Sparks, Commissioner

Charles E. Wilson, Commissioner

AGREEMENT ESTABLISHING USE AND SERVICE AREAS OF THE PARTIES

AGREEMENT between King County Water District No. 111, a special purpose District of the State of Washington, hereinafter called "District", and the City of Auburn, a municipal corporation of the State of Washington, hereinafter called "City".

1. Purpose. The District and the City have previously entered into an "Agreement Establishing Use and Service Areas of the Parties" on November 9, 1978. The parties now desire to revise said agreement and establish a new boundary between their respective service areas.

2. Agreement. It is hereby agreed between the parties that the boundary between the area served by each shall be as follows:

> Beginning at the intersection of the North line of Section 3, Township 21 North, Range 5 East, W.M., with the Northwesterly margin of Primary State Highway No. 2 (SR 18);
> Thence Southwesterly along said Northwesterly margin to its intersection with the South line of the North 1/2 of the South 1/2 of said Section 3;
> Thence Westerly along said South line, and the South line of the North 1/2 of the South 1/2 of Section 4, Township 21 North, Range 5 East, W.M., to its intersection with the West line of the East 1/2 of the East 1/2 of the East 1/2 of the West 1/2 of said Section 4;
> Thence Northerly along said West line to the North line of said Section 4;
> Thence Easterly along said North line of said Section 4 to the Northeast corner of the West 1/2 of said Section 4, and the terminus of the service area boundary line description.

The District shall provide water service to the area lying generally north of said boundary line and the City shall provide water service to the area lying generally south of said boundary line.

DATED THIS 23 day of OCTOBER, 1980.

KING COUNTY WATER DISTRICT NO. 111

Gary G. Cline, Commissioner

Robert R. Sparks, Commissioner

Charles E. Wilson, Commissioner

THE CITY OF AUBURN

By _____
Mayor

By _____
Clerk

RESOLUTION NO. 1165

A RESOLUTION OF THE CITY COUNCIL OF THE CITY OF AUBURN, WASHINGTON, AUTHORIZING THE MAYOR AND CITY CLERK OF THE CITY OF AUBURN TO EXECUTE AN AGREEMENT BETWEEN KING COUNTY WATER DISTRICT NO. 111 AND THE CITY OF AUBURN, ESTABLISHING USE AND SERVICE AREAS OF THE PARTIES.

WHEREAS, King County Water District No. 111 and the City of Auburn have previously entered into an "Agreement Establishing Use and Service Areas of the Parties", which agreement was authorized by Auburn City Resolution No. 931; and

WHEREAS, the parties now desire to revise said agreement and establish a new boundary between their respective service areas.

NOW, THEREFORE, THE CITY COUNCIL OF THE CITY OF AUBURN, WASHINGTON, IN A REGULAR MEETING DULY ASSEMBLED, HEREWITH RESOLVES THAT:

THE Mayor and City Clerk of the City of Auburn are hereby authorized to execute an Agreement between King County Water District No. 111 and the City of Auburn, Establishing Use and Service Areas of the Parties. A copy of said agreement is attached hereto, denominated as Exhibit "A" and made a part hereof as though set forth in full herein.

DATED and SIGNED this 15th day of December, 1980.

CITY OF AUBURN

Stanley P. Kersey
MAYOR

ATTEST:

Coralee A. McConnehey
City Clerk

Resolution No. 1165
12-4-80

AGREEMENT ESTABLISHING USE AND SERVICE AREAS OF THE PARTIES

AGREEMENT between King County Water District No. 111, a special purpose District of the State of Washington, hereinafter called "District", and the City of Auburn, a municipal corporation of the State of Washington, hereinafter called "City".

1. Purpose. The District and the City have previously entered into an "Agreement Establishing Use and Service Areas of the Parties" on November 9, 1978. The parties now desire to revise said agreement and establish a new boundary between their respective service areas.

2. Agreement. It is hereby agreed between the parties that the boundary between the area served by each shall be as follows:

> Beginning at the intersection of the North line of Section 3, Township 21 North, Range 5 East, W.M., with the Northwesterly margin of Primary State Highway No. 2 (SR 18);
> Thence Southwesterly along said Northwesterly margin to its intersection with the South line of the North 1/2 of the South 1/2 of said Section 3;
> Thence Westerly along said South line, and the South line of the North 1/2 of the South 1/2 of Section 4, Township 21 North, Range 5 East, W.M., to its intersection with the West line of the East 1/2 of the East 1/2 of the East 1/2 of the West 1/2 of said Section 4;
> Thence Northerly along said West line to the North line of said Section 4;
> Thence Easterly along said North line of said Section 4 to the Northeast corner of the West 1/2 of said Section 4, and the terminus of the service area boundary line description.

The District shall provide water service to the area lying generally north of said boundary line and the City shall provide water service to the area lying generally south of said boundary line.

DATED THIS 23 day of OCTOBER, 1980.

KING COUNTY WATER DISTRICT NO. 111

Gary G. Cline, Commissioner

Robert R. Sparks, Commissioner

Charles E. Wilson, Commissioner

THE CITY OF AUBURN

By _____
Mayor

By _____
Clerk

The District shall provide water service to the area lying generally north of said boundary line and the City shall provide water service to the area lying generally south of said boundary line.

DATED THIS 16th day of December, 1980.

KING COUNTY WATER DISTRICT NO. 111

Gary G. Cline, Commissioner

Robert R. Sparks, Commissioner

Charles E. Wilson, Commissioner

THE CITY OF AUBURN

By Stanley G. Kersey
Mayor

By Coralee A. McConnehey
Clerk

ORIGINAL

Interlocal Agreement No. 1

for the

132nd Avenue SE Interim Intertie Project

between

King County Water District #111 and the City of Auburn

I. Project:

Construction and operation of piping, pump station, and meter for water supply intertie facilities between the City of Auburn (Auburn), and King County Water District #111 (District). Joint reference to Auburn and the District shall be the Participants. The project facilities are as shown on Exhibit A - Facilities Plan.

II. General:

A. This Interlocal Agreement (IA) is consistent with the Joint Operating Agreement (JOA) of the South King County Regional Water Association (SKCRWA) dated 26 July 1995.

B. There is an immediate need to provide for additional water supply to meet the needs of the District, and meet the emergency needs of Auburn.

C. Auburn has the necessary water system capacity to meet a portion of the near term, interruptable, public water supply needs of the District. The District has the necessary system capacity to meet a portion of the emergency needs of Auburn.

D. Each Participant hereby identifies its authorized representative as "Manager" of the District, and as "City Engineer" of Auburn.

III. Description of Project:

A. The project shall consist of the construction of a 16-inch diameter transmission main on 132nd Avenue SE northerly from Auburn's Lea Hill Reservoir Site to the intersection of 132nd Avenue SE and SE 288th Street. Other facilities within the project construction include a booster pump station, meter station, and appurtenances as necessary.

B. The project is intended to design, construct, and operate facilities that provide for up to 1.0 MGD, or additional as mutually agreed to by the Auburn City Council and the District Board of Commissioners, of water to be pumped from Auburn's Lea Hill Reservoir Site to the District's system. The project will provide for flow control facilities as necessary and a master meter which will be used to measure the water supplied.

C. Respective ownership, maintenance, and renewal and/or replacement (r/r) responsibilities are as outlined in the following table:

Rec 2678

Facility	Location	Ownership, Maintenance, & R/R
Pump Station, Flow Control, Telemetry	Lea Hill Reservoir Site	District
Meter Station and 16-inch Waterline	Lea Hill Reservoir Site to SE 298th Street	Auburn
16-inch Waterline	SE 298th Street to SE 288th Street	District

IV. Project Costs:

The project costs are estimated as shown on Exhibit B - Project Cost. Final project costs shall be reviewed and approved by the Participants. The Participants shall maintain individual cost records on their expenses for the project. The District's engineer shall maintain total cost records for the project.

V. Project Financing:

The Participants shall fully finance and pay for their proportionate share as shown in Exhibit B - Project Cost. Each party shall deposit funds with the other party to perform the project work for the proposed facilities in accordance with the schedule shown in Exhibit C - Project Schedule.

VI. Capacity Rights:

Each of the Participants shall have capacity rights in the facilities as shown in Exhibit D - Capacity Rights.

VII. Facilities Ownership:

All pipelines and appurtenances shall be owned by the Participant within whose service boundary the pipeline is located. The pump station and appurtenances shall be owned by the District. The telemetry, meter station, and appurtenances shall be owned by Auburn.

VIII. Operations and Maintenance:

A. Each Participant shall be fully responsible for operation and maintenance including renewal and/or replacement of the facilities it owns.

B. Operational parameters of the facilities shall conform to the parameters shown in Exhibit E - Project Criteria.

IX. Service Charges:

A. Auburn will perform a Cost of Service Study to determine the actual cost of service to its customers. It is expected that a customer classification for "wholesale" will be created, and rates for service charges shall be based on such customer classification.

B. The District will provide a rate to Auburn to be applied for emergency service charges.

C. Adjustments to the service charges will be made in accordance with Section 4.H of the JOA.

X. Project Management:

A. The Participants shall meet monthly for project coordination, or more frequently as needed.

Rec 2678

B. The District's engineer shall be the overall Project Coordinator. Assignment of responsibilities to the District's engineer shall be by agreement of the Participants' authorized representatives.

C. The Participants shall be responsible for design, construction management, and commissioning of facilities to be constructed in accordance with the facilities owned. Responsibilities may be assign otherwise by agreement of the Participants' authorized representatives.

XI. Conditions of Service:

Auburn does not presently have the necessary capacity to guarantee delivery of water. It is acknowledged that in the event of any failure or decreased capacity for any reason or increased demand within the retail service area of Auburn, the supply to the District may be immediately reduced or stopped under such conditions at the sole discretion of Auburn.

XII. Term of Duration of Agreement:

A. This Interlocal Agreement No. 1 shall remain in full force unless terminated by mutual agreement of the Participants.

XIII. Interim Status

The intent of this agreement is to provide an interim water supply to the District until the Lea Hill Intertie Project can be implemented.

The Participants agree however, that if an Interlocal Agreement for the Lea Hill Intertie Project between Auburn, the District, and Covington Water District is not completed by 1 February 1996, that Auburn and the District will seek to reach agreement for an Interlocal Agreement to design and construct the necessary permanent facilities to provide the District a reliable supply of no less than 2.0 million gallons per day.

It is envisioned that this would be accomplished by constructing a second Lea Hill Pump Station in Auburn, pipelines, and a permanent booster pump station in the vicinity of the Lea Hill Reservoir. In addition, Auburn will continue to pursue additional water rights to place this interim supply and future supply amounts to the District on a par with Auburn customers.

All such obligations to such future Interlocal Agreement and project are conditioned on Auburn and the District reaching a mutually acceptable cost sharing arrangement on the permanent facilities, including Auburn's in-city improvements, and upon Auburn obtaining future water rights. Cost sharing will be based on design capacity (generally proportionate to volume of water contracted for). The District specifically acknowledges and agrees that failure of Auburn to obtain additional water rights in excess of any Auburn needs shall be cause for not implementing an Interlocal Agreement to bring the District on par with Auburn customers.

XIV. Amendments:

A. This Interlocal Agreement No. 1 may be amended in writing by agreement signed by the Participants.

B. The authorized representatives shall have authority to update exhibits attached hereto. The exhibits shall be updated and/or revised only upon written agreement signed by the Participants' authorized representatives. Updates must be ratified by Auburn's Public Works Committee of the City Council.

XV. Hold Harmless:

Participants agree to indemnify and hold harmless the other participant from and against any loss, cost, damage, or expense of any kind and nature arising out of injury to person or damage

Rec 3678

to property in any manner caused by negligent or omission of the individual participant in the performance of its work pursuant to or in connection with this Interlocal Agreement No. 1.

IN WITNESS WHEREOF, the Participants hereto have caused this Agreement to be executed by their proper Officers on the 7th day of November 1995.

City of Auburn

By: Charles A. Booth

Title: Mayor

Attest:

By: Robin Worthington

Approved as to Form:

By: [illegible]

King County Water District #111

By: Charles E. Wilson

Title: Pres Board of Commissioners

Attest:

By: Jeanne M. Baker

Approved as to Form:

By: _____

H:\DLH\INTERTIE\OA\IA1-1.DOC

Fee 2675

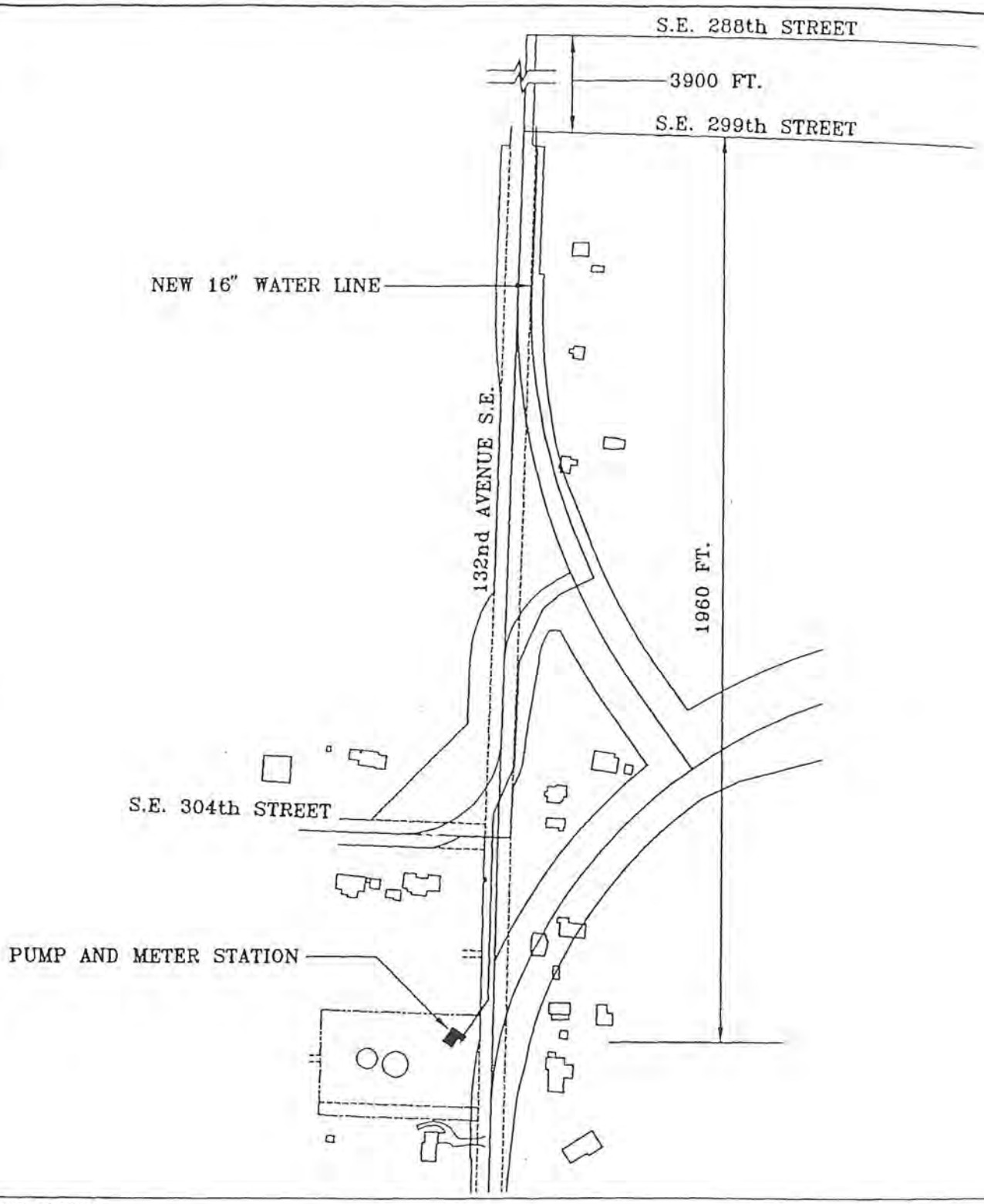

UPDATE APPROVAL

1. AUBURN: _____ DISTRICT: _____

2. AUBURN: _____ DISTRICT: _____

EXHIBIT 'A'
FACILITY PLAN

SCALE 1" = 330'

Revised: October 11, 1995

DATE: AUGUST 22, 1995

Res 3678

EXHIBIT B - PROJECT COST

ref: H:\dth\assign\diallo\asum.xls

11-Oct-95

132nd Avenue SE Interim Intertie Project

including franchise requirements shown for clarity

#	Item	quantity	units	unit cost	Project Cost	Auburn	District	Covington	Comments
	Construction Cost								
B 2	6" mainline	2,427	LF	$55	$133,485	$133,485			100% Auburn
6	12" mainline	3,021	LF	$83	$250,743	$250,743			100% Auburn
10	16" mainline								
11	Intertie franchise requirement	1,978	LF	$110	$217,580	$10,879	$103,351	$103,351	5% Auburn, 47.5% District, 47.5% Cov
12	Intertie continuation	3,882	LF	$110	$427,020	$21,351	$405,669		5% Auburn, 95% District
14	20" mainline intertie franchise requirement	650	LF	$138	$89,700	$25,654	$32,023	$32,023	28.6% Auburn, 35.7% District, 35.7% Cov
40	Pump station	1	LS	$30,000	$30,000	$4,500	$25,500		15% Auburn, 85% District
41	Telemetry	1	LS	$5,000	$5,000	$750	$4,250		15% Auburn, 85% District
42	Electric service	1	LS	in #40					
50	Meter station	1	LS	$12,500	$12,500	$625	$11,875		5% Auburn, 95% District
	Sub-total				$1,166,028	$447,987	$582,667	$135,373	
69	Proportionate share %'age					38.4%	50.0%	11.6%	and for AC allocations
	Allied Cost								
	Engineering								
	Auburn								
70	Thru 1 Aug 95				$9,400	$3,611	$4,697	$1,091	approximate from accounting records
71	1 Aug to 1 Nov				$12,000	$4,610	$5,996	$1,393	estimate only
99	Remainder to 40%				$445,011	$170,973	$222,373	$51,665	
	Sub-total				$466,411	$179,195	$233,067	$54,149	
100				Total	$1,632,439	$627,182	$815,734	$189,523	

Update approval

101 Auburn: _____, dated: _____; District: _____, dated: _____

102 Auburn: _____, dated: _____; District: _____, dated: _____

200 Covington allocation and obligation (per Cov letter dated 11 May 1995), not a part of IA1; shown for clarity only.

Exhibit C - Project Schedule

to

Interlocal Agreement No. 1

for

132nd Avenue SE Interim Intertie Project

Activity	Cumulative Calendar Day Schedule	Target Date
Execute Interlocal Agreement	0	
District $20,000 deposit to Auburn	3	
Complete design	60	15 Oct. 1995
Rates for service charges provided	90	
District $100,000 deposit to Auburn	100	
Award construction contract	120	
District $250,000 deposit to Auburn	180	
District $300,000 deposit to Auburn	210	
Complete construction	210	1 May 1996
Commissioning	230	
Final Project cost accounting	260	
Final District Balancing Payment to Auburn	290	

Update Approval

1. Auburn: _____, Dated: _____
   District: _____, Dated: _____

2. Auburn: _____, Dated: _____
   District: _____, Dated: _____

Rec 2678

Exhibit D - Capacity Rights

to

Interlocal Agreement No. 1

for

132nd Avenue SE Intertie Project

Item and Description

1. Pipeline on 132nd Avenue SE, from Lea Hill Reservoir, to 5,860 feet northerly.
   a. District capacity @ 95%
   b. Auburn capacity @ 5% (emergency allowance)

2. Pump Station at Lea Hill Reservoir site.
   a. District capacity @ 85%
   b. Auburn capacity @ 15% (consumptive share)

3. Meter Station at Lea Hill Reservoir site.
   a. District capacity @ 95%
   b. Auburn capacity @ 5% (emergency allowance)

4. All other facilities and appurtenances @ 100% according to ownership.

Update Approval

1. Auburn: _____, Dated: _____
   District: _____, Dated: _____

2. Auburn: _____, Dated: _____
   District: _____, Dated: _____

Res 2678

Exhibit E - Project Criteria

to

Interlocal Agreement No. 1

for

132nd Avenue SE Intertie Project

Item and Description

1. Pipeline sizing per Exhibit A.
2. No storage shall be included in the project. All storage required to enable the District to optimally utilize facilities shall be provided by the District.
3. The flow rate is expected to be as high as 1,000 gpm whenever available supply exists.
4. The supply available is not expected to require the existing Lea Hill Pump Station to operate above design capacity, i.e., one pump is normally to be on stand-by.
5. Telemetry shall include low level shut-off signal from the Lea Hill Reservoir at water level elevation 558 feet.
6. Flow rates through the facilities shall be set for full 24 hour periods through notification to Auburn by the District on a daily basis.
7. The District will pump the total quantity of water requested at an average flow rate such that the total quantity of water requested is pumped over a 24 hour period.
8. The district will notify Auburn by 9:00 AM on the day previous to the day that pumping will proceed and at what rate, except in case of an emergency.

Update Approval

1. Auburn: _____, Dated: _____
   District: _____, Dated: _____

2. Auburn: _____, Dated: _____
   District: _____, Dated: _____

Res 2678

C. Benst

Interlocal Agreement 2
for the
Lea Hill Intertie Project
between
Covington Water District,
King County Water District #111,
and the
City of Auburn

I. Project Title: Lea Hill Intertie, consisting of construction and operation of piping, pump stations, meters, and source facilities for a water supply intertie between the City of Auburn (Auburn), Covington Water District (CWD) and King County Water District #111 (WD111), jointly termed the Participants. The project facilities are as shown on Exhibit A - Facilities Plan.

II. General:

A. This Interlocal Agreement 2 (IA2) is consistent with the Joint Operating Agreement (JOA) of the South King County Regional Water Association (SKCRWA) dated 26 July 1995.

B. There is an immediate need to provide for additional water supply to meet the needs of CWD and WD111, and meet the emergency needs of Auburn.

C. Performance by Auburn under IA2 shall be subject to its pre-existing contractual and/or water supply obligations to Algona, Kent, Muckleshoot Indian Tribe, and Pacific. Future Interlocal Agreements shall be subject to the terms and conditions of IA2. It is the intent of Auburn to create a first in time, first in service approach to wholesale of water within the limitations of Auburn's water rights and/or supply capacity.

D. Auburn has the necessary water system capacity to meet a portion of the near term, interruptable, public water supply needs of CWD and WD111. CWD and WD111 have the necessary system capacity to meet a portion of the emergency needs of Auburn.

E. Each Participant desires to develop firm supplies to meet long term, continuing needs.

F. Each Participant hereby identifies its authorized representative as the "General Manager" of CWD, the "General Manager" of WD111, and as the "City Engineer" of Auburn.

G. For wholesale water purposes per Section 4. C. of the JOA, the following interties exist or are expected to exist in the near future for the Participants to IA2:

EXHIBIT "A"
CITY OF AUBURN
RESOLUTION NO. 2721
ADOPTED 09/03/96

1. CWD
   a) Auburn (future)
   b) Black Diamond (future)
   c) Tacoma (future)
   d) King County Water District 94 (future)
   e) WD111, and
   f) Cedar River Water and Sewer District.

2. WD111
   a) Auburn,
   b) CWD,
   c) Kent, and
   d) Soos Creek Water and Sewer District.

3. Auburn
   a) Algona,
   b) Kent,
   c) WD111,
   d) Pacific,
   e) Bonney Lake,
   f) Lakehaven Utility District (future),
   g) Muckleshoot Indian Tribe (future), and
   g) CWD (future).

H. Interlocal Agreement No. 1, 132nd Avenue Interim Intertie Project, dated 7 November 1995, is terminated by mutual agreement of the WD111 and Auburn upon completion of the improvements described in Exhibit B of this IA2.

III. Description of Project:

A. The project facilities are generally described in the Engineering Report prepared by EES, dated September 1995, and any subsequent amendments thereto.

B. The project includes design, construction, and operation of facilities to provide water as follows:

Year	Auburn Maximum Day Demand (mgd)	CWD Maximum Day Demand (mgd)	WD111 Maximum Day Demand (mgd)	Total Maximum Day Demand (mgd)
1998	2.0	1.0	2.0	5.0
2000	2.0	1.5	2.5	6.0
2002	2.0	2.5	2.5	7.0
2005	2.0	2.5	2.5	7.0
2010	2.0	2.5	2.5	7.0

EXHIBIT "A"
CITY OF AUBURN
RESOLUTION NO. 2721
ADOPTED 09/03/96

Additional water may be available as mutually agreed to by the Auburn City Council and the Board of Commissioners of either District. Water is to be provided from the Auburn system to the Lea Hill Reservoir Site, and then to the pipeline on 132nd SE running north to the Districts. The project will provide for flow control facilities as necessary and a master meter which will be used to measure the water supplied. The reverse order is used for water to be provided from the Districts to Auburn.

C. Respective Facility Ownership, Capacity Rights, and responsibility for operation, maintenance, and renewal and/or replacement (r/r) are as described in Exhibit B. Operational parameters shall be as defined in Exhibit C - Project Criteria.

D. Auburn will design, construct and maintain the facilities constructed under IA2 in accordance with reasonably accepted water utility standards for similar municipal water utilities. Facilities will be designed in compliance with the City's adopted design standards as described in the 1995 Comprehensive Water Plan.

E. The participants agree that an independent Value Engineering Analysis will be done at the 75 percent design level.

IV. Project Costs:

A. The project costs are estimated as shown on Exhibit D - Project Cost. Final project costs shall be reviewed and approved by the Participants. The Participants shall maintain individual cost records on their expenses for the project. Auburn will retain a consultant to maintain total cost records for the project.

B. Costs associated with the development of new water sources will be shared based on the basis quantity of water each Participant is allocated from the sources.

V. Project Financing: The Participants shall fully finance and pay for their proportionate share as shown in Exhibit D - Project Cost. The Districts shall deposit funds with Auburn to perform the project work for the proposed facilities in accordance with the schedule shown in Exhibit E - Project Schedule.

VI. Service Charges:

A. Auburn has prepared a Cost of Service Study to determine the cost of service to its customers. A customer classification for "wholesale" has been created, and rates for service charges shall be based on a rate study for the wholesale customer classification. Auburn will regularly update the cost of service analysis. Wholesale water rates will be based on costs of providing the service. Cost of developing the initial Cost of Service Study and Rate Study will be included within the project costs.

B. WD111 and CWD shall provide a rate to Auburn to be applied for emergency service charges. Such rate shall be based on costs of providing the service, or, in the interim until a Cost of Service / Rate Study is completed, shall be equal to or less than Auburn's current wholesale rate.

C. Adjustments to the service charges will be made in accordance with Section 4.H. of the JOA.

VII. Project Coordination:

A. The Participants shall meet monthly for project coordination, or more frequently as needed.

B. Auburn will retain a consultant to be the overall Project Coordinator. Assignment of responsibilities to the Project Coordinator shall be by agreement of the Participants' authorized representatives.

C. The Participants shall be responsible for design, construction management, and commissioning of facilities to be constructed in conformity to facility ownership. Responsibilities may be assigned otherwise by agreement of the Participants' authorized representatives.

VIII. Conditions of Service:

A. Auburn does not presently have the necessary capacity (i.e., water supply and/or water rights) to guarantee delivery of firm uninterruptible water. It is acknowledged and agreed that in the event Auburn experiences any failure or decreased capacity for any reason or increased demand within its retail service area, the supply to the Districts may be immediately reduced or stopped under such conditions at the sole discretion of Auburn. The Districts agree that Auburn may take such action irrespective of any cost, investment in capacity, or other reliance which may have been placed upon the intertie facilities and interruptible water supply referenced in this IA2.

B. The Districts specifically acknowledge and agree that failure of Auburn to obtain additional primary water rights in excess of Auburn needs shall be cause for not bringing the Districts on a par with Auburn customers. For purposes of this IA2, on par shall mean: Upon receiving new primary water rights for additional water sources in the amount of at least 7 mgd the quantities of water described in paragraph III. B., the Districts will be served on the same basis and with the same reliability as service is provided to Auburn's retail customers, and Auburn will include the maximum total quantity of water cited in paragraph III. B. in all of its water system planning as if the quantity was served to direct service customers and any curtailment, restrictions or limitations on delivery would be on the same basis as curtailment, restrictions, or limitations on delivery to retail customers.

EXHIBIT "A"
CITY OF AUBURN
RESOLUTION NO. 2721
ADOPTED 09/03/96

C. The Participants will proceed with development and implementation of projects in accordance with the project schedule shown in Exhibit E to increase firm system capacity and a wholesale supply capacity as described in paragraph III. B., designed to ensure service to the Districts. It is anticipated the necessary projects required to provide firm supply will be proposed wells numbers 6 and 7 described in the City's 1995 Comprehensive Water Plan. The City has obtained Supplemental Water Rights for the proposed wells numbers 6 and 7. It is the intent of the Auburn to obtain Primary Water Rights for wells number 6 and 7 and additional new wells, if required, sufficient to provide the quantities of water described in paragraph III. B. which shall bring the Districts on a par with Auburn customers.

D. It is the intent of Auburn to provide the water described in paragraph III. B. whenever it is available subject to the limitations described in paragraphs VIII. A. and B. Auburn shall use reasonable diligence and best efforts to provide immediate notice in the event it becomes aware that it may not be able to fulfill the requirements of paragraph III. B. for any reason.

IX. Term of Duration of Agreement: This IA2 shall remain in full force unless terminated by mutual agreement of the Participants.

X. Amendments:

A. This IA2 may be amended only in writing by agreement signed by the Participants.

B. The authorized representatives shall have authority to update exhibits attached hereto. The exhibits shall be updated and/or revised only upon written agreement signed by the Participants' authorized representatives. Updates must be ratified by Auburn's City Council.

XI. Dispute Resolution:

A. Should a dispute arise between the participants regarding the technical aspects of the planning, design, construction, funding, or operation of the facilities contemplated under IA2, the authorized representatives of the participants, as defined in paragraph II. E., shall meet and select two persons who, along with the authorized representatives of the participants, will form a dispute resolution panel to resolve the dispute. Should the dispute resolution panel not be able to reach a mutually satisfactory resolution the dispute will be resolved as described below.

B. Legal disputes between the participants to IA2 shall be resolved through the use of mediation by a mediator mutually acceptable to the participants with each participant agreeing to equally share the cost of the mediator. Should the participants not be able to satisfactorily resolve the dispute through mediation, the forum for resolution shall be King County Superior Court. The substantially prevailing party will be entitled to attorney fees and costs.

XII. Hold Harmless: Each Participant agrees to indemnify and hold harmless the other participant from and against any loss, cost, damage, or expense of any kind and nature arising out of injury to person or damage to property in any manner caused by the negligent act or omission of the indemnified individual participant in the performance of its work pursuant to or in connection with this IA2.

XIII. Severability: If any provision of this IA2 is invalid or unenforceable the remaining provisions shall remain in force and effect.

IN WITNESS WHEREOF, the Participants hereto have caused this IA2 to be executed by their proper Officers on the _____ day of _____, 1996.

City of Auburn

By: Charles A. Booth

Title: MAYOR

Attest:

By: Robin Wahlhuetter

Approved as to Form:

By: [signature]

Covington Water District

By: Lyp Hornsby

Title: President, Board of Commissioners

Date: 10/2/96

King County Water District #111

By: G. L. Randall

Title: PRES BD OF COMM

Date: 9/26/96

EXHIBIT "A"
CITY OF AUBURN
RESOLUTION NO. 2721
ADOPTED 09/03/96

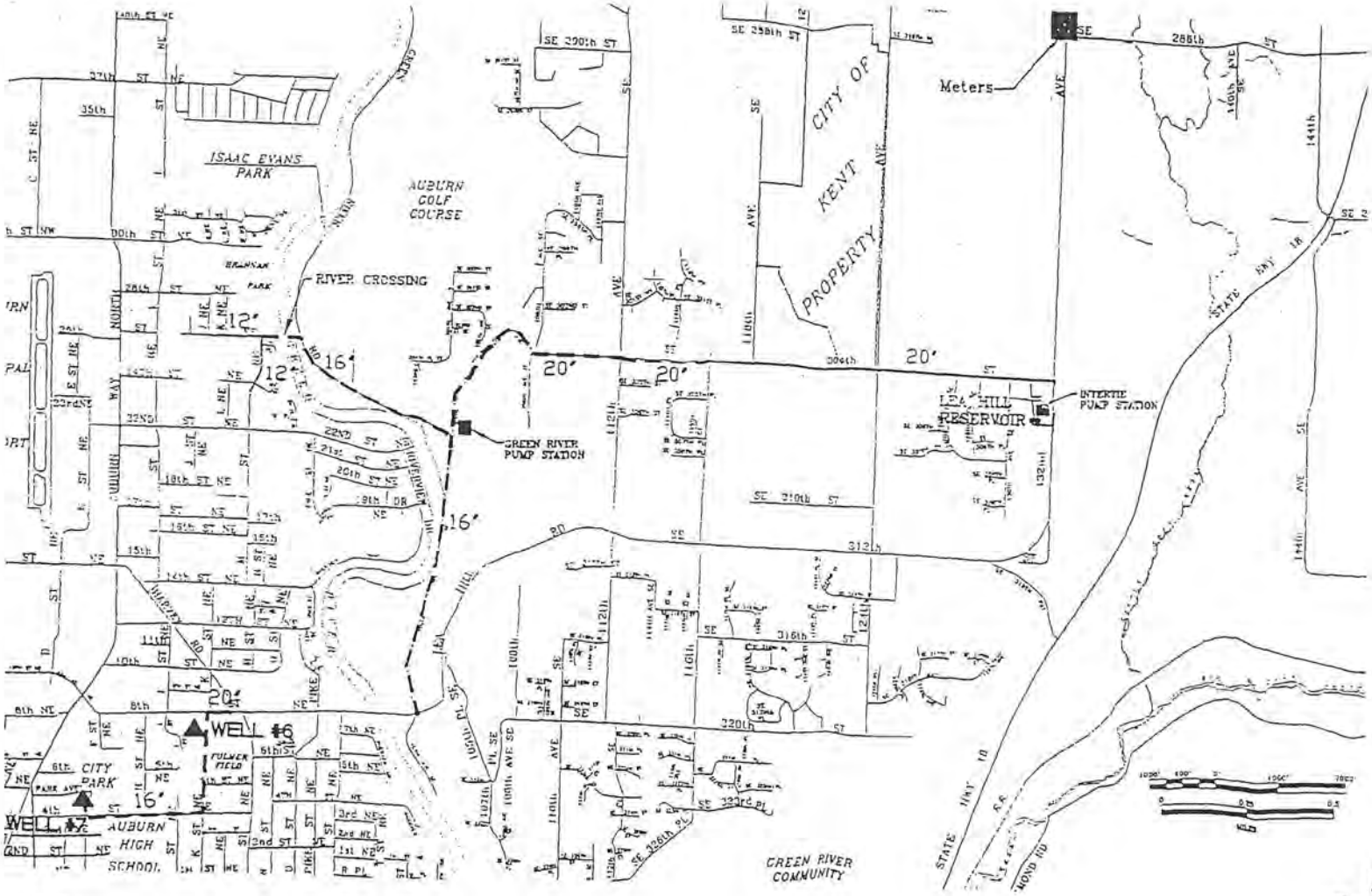

Exhibit A
Facilities Plan
to
Interlocal Agreement 2

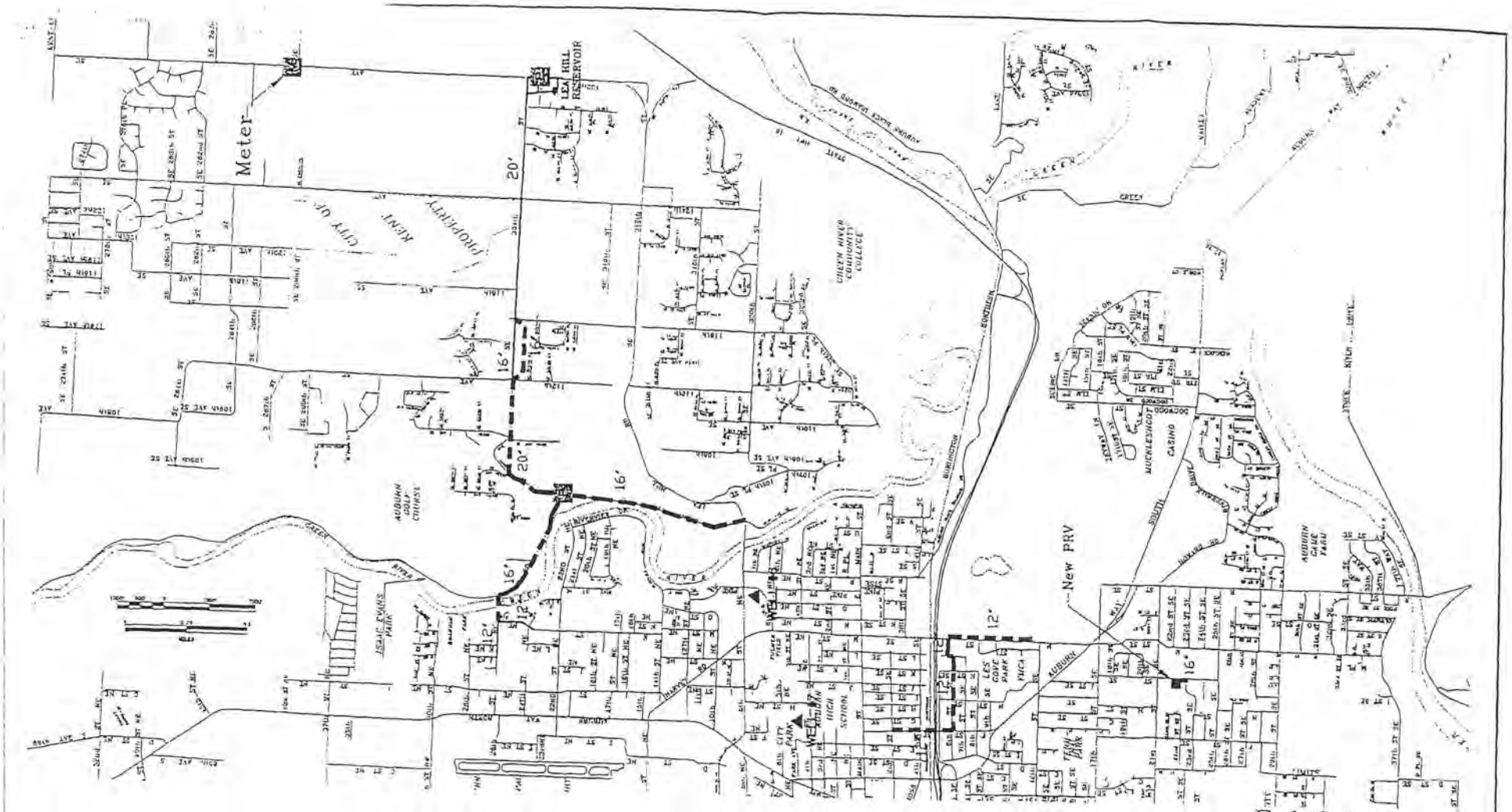

EXHIBIT "A"
CITY OF AUBURN
RESOLUTION NO. 2721
ADOPTED 09/03/96

Exhibit A
Facilities Plan
to
Interlocal Agreement 2
for
Lea Hill Intertie Proje

Updated 12/1/97
Original

Exhibit A
Facilities Plan
(Continued)

Exhibit A
Update Approval

Auburn: _____, Dated: 11-10-97

CWD: _____, Dated: 10-09-97

WD111: _____, Dated: 11/6/97

Auburn: _____, Dated: _____

CWD: _____, Dated: _____

WD111: _____, Dated: _____

Auburn: _____, Dated: _____

CWD: _____, Dated: _____

WD111: _____, Dated: _____

Exhibit B
Facility Ownership, Capacity Rights, Operation, Maintenance, and Renewal and Replacement Responsibilities

to

Interlocal Agreement 2

for

Lea Hill Intertie Project

Facility	Location	Facility Ownership	Capacity Rights	Operation, Maintenance, & Renewal/Replacement Responsibility
New Lea Hill Pump Station	Green River Road & 104th SE	Auburn	WD111 2.5 MGD CWD 2.5 MGD	Auburn
Lea Hill Booster Pump Station	Lea Hill Reservoir Site	Auburn	WD111 and CWD 95% Auburn 5% (note 2)	Auburn
Flow Control, Telemetry	Lea Hill Reservoir Site	Auburn	WD111 and CWD 95% Auburn 5% (note 2)	Auburn
Meter Station	Intersection of 132nd SE and SE 288th Street	Auburn	WD111 and CWD 95% Auburn 5% (note 2)	Auburn
16-inch Waterline	Green River Road 26nd NE to 104th SE	Auburn	Note 3	Auburn
16-inch Green River crossing	Under Green River at 26nd NE	Auburn	Note 3	Auburn
16-inch Waterline	104th SE, NE 8th to Green River Road	Auburn	Note 3	Auburn
20-inch Waterline	SE 304th, New Lea Hill Pump Station to 116th SE	Auburn	Note 3	Auburn
Well #6	City	Auburn	Note 3	Auburn
Well #7	City	Auburn	Note 3	Auburn
16-inch Waterline & PRV	K Street SE, 22nd Street SE to 21st Street SE	Auburn	Note 3	Auburn
12-inch Waterline	M Street SE, Well 1 to 6th Street SE	Auburn	Note 3	Auburn
12-inch Waterline	6th Street SE, M Street SE to F Street SE	Auburn	Note 3	Auburn
12-inch Waterline	F Street SE, 6th Street SE to 2nd Street SE	Auburn	Note 3	Auburn

Note 2: Auburn capacity right is in recognition of the emergency capability of the facility.
Note 3: Capacity right is not specific to facility, however participation in constructing the facility provides capacity right to 5 MGD from Auburn's water system.

EXHIBIT "A"
CITY OF AUBURN
RESOLUTION NO. 2721
ADOPTED 09/03/96

Exhibit B
Facility Ownership, Capacity Rights, Operation, Maintenance, and Renewal and Replacement Responsibilities
(Continued)

Exhibit B
Update Approval

1. Auburn: _____, Dated: _____

   CWD: _____, Dated: _____

   WD111: _____, Dated: _____

2. Auburn: _____, Dated: _____

   CWD: _____, Dated: _____

   WD111: _____, Dated: _____

3. Auburn: _____, Dated: _____

   CWD: _____, Dated: _____

   WD111: _____, Dated: _____

EXHIBIT "A"
CITY OF AUBURN
RESOLUTION NO. 2721
ADOPTED 09/03/96

Exhibit C
Project Criteria

to

Interlocal Agreement 2

for

Lea Hill Intertie Project

Project Criteria:

- Waterlines shall be sized as shown on Exhibit A.
- No storage shall be included in the project. All storage required to enable the Districts to optimally use facilities constructed shall be provided by the Districts.
- Pumping Facilities shall be constructed to provide flow rates as described in paragraph III. B.
- The New Lea Hill Pump Station is to operate at design capacity with one pump in stand-by mode.
- The Lea Hill Booster Pump Station is to operate at design capacity with one pump in stand-by mode.
- Pump Stations to be designed with single speed pumps.
- Emergency Power not provided at pump stations.
- Flow rates to the Districts from Auburn through the facilities shall be set for constant flow for full 24 hour periods, subject to reasonable hydraulic and mechanical tolerances.
- The Districts will notify Auburn by 9:00 AM if the District requests adjustment of the desired pumping rate for the following day, except in case of an emergency.
- In the event Auburn desires emergency water from the Districts, the Districts will provide Auburn a daily estimate of the volume of water which will likely be available during the following 24 hour period.

Exhibit C
Update Approval

1. Auburn: _____, Dated: _____

   CWD: _____, Dated: _____

   WD111: _____, Dated: _____

2. Auburn: _____, Dated: _____

   CWD: _____, Dated: _____

   WD111: _____, Dated: _____

EXHIBIT "A"
CITY OF AUBURN
RESOLUTION NO. 2721
ADOPTED 09/03/96

Exhibit D

Project Costs

to

Interlocal Agreement No. 2

for

Lea Hill Intertie Project

Description	Total Est. Cost	Auburn Cost Percent	Auburn Cost Cost	WD111 Cost Percent	WD111 Cost Cost	CWD Cost Percent	CWD Cost Cost
INSIDE AUBURN							
PIPING							
20" along 304th from Pump Station to 116th Ave SE (WS-105,106)	$570,000	10%	$57,000	45%	$256,500	45%	$256,500
16" on approx 26th from "M" to Pump Station (under Green R., incl crossing) (WS-102,103)	$395,000	20%	$79,000	40%	$158,000	40%	$158,000
16" east of Green River from 8th St. to Pump Station (WS-101)	$335,000	20%	$67,000	40%	$134,000	40%	$134,000
Meter Station @ 132nd SE and SE 288th	$35,000	5%	$1,750	47.5%	$16,625	47.5%	$16,625
12" M Street from Well 1 to 6th Street SE (WS-110)	$120,000	5%	$6,000	47.5%	$57,000	47.5%	$57,000
12" 6th Street SE from M Street to F Street (WS-111,WS-112)	$140,000	5%	$7,000	47.5%	$66,500	47.5%	$66,500
12" F Street from 6th Street to 2nd Street SE (WS-113)	$85,000	5%	$4,250	47.5%	$40,375	47.5%	$40,375
K Street Parallel pipeline and PRV (WS-114)	$65,000	5%	$3,250	47.5%	$30,875	47.5%	$30,875
PIPING SUBTOTAL	$1,745,000		$225,250		$759,875		$759,875
PUMP STATIONS							
Green River Pump Station (WS-104)	$350,000	10%	$35,000	45%	$157,500	45%	$157,500
Intertie Pump Station (WS-107)	$245,000	5%	$12,250	47.5%	$116,375	47.5%	$116,375
PUMP STATIONS SUBTOTAL	$595,000		$47,250		$273,875		$273,875
NEW SUPPLY FACILITIES							
Drill and Develop Well #6 and Well #7 (7 mgd) (S-106,S-108,S-109,S-110)	$1,250,000	28.6%	$357,143	35.7%	$446,429	35.7%	$446,429
TOTAL ESTIMATED CONSTRUCTION COST	$3,590,000	17.5%	$629,643	41.2%	$1,480,179	41.2%	$1,480,179
PRELIMINARY PROJECT COSTS							
Cost of Service Study / Rate Study	$41,000	62.2%	$25,502	18.9%	$7,749	18.9%	$7,749
Consultant Services (Jan 91 to Dec 94)							
Feasibility Studies and Water Rights Analysis	$41,522	33.3%	$13,841	33.3%	$13,841	33.3%	$13,841
Development of Interlocal Agreement	$9,406	33.3%	$3,135	33.3%	$3,135	33.3%	$3,135
Final Engineering Report	$7,198	17.5%	$1,262	41.2%	$2,968	41.2%	$2,968
PRELIMINARY PROJECT COSTS SUBTOTAL	$99,126		$43,740		$27,693		$27,693
ALLIED COST							
Contingency (15.0%)	$538,500	17.5%	$94,446	41.2%	$222,027	41.2%	$222,027
State Sales Tax (8.2%)	$294,380	17.5%	$51,631	41.2%	$121,375	41.2%	$121,375
Engineering Design (6.5%)	$233,350	17.5%	$40,927	41.2%	$96,212	41.2%	$96,212
Construction Engineering (7.5%)	$269,250	17.5%	$47,223	41.2%	$111,013	41.2%	$111,013
Legal (1.0%)	$35,900	17.5%	$6,296	41.2%	$14,802	41.2%	$14,802
Fiscal (1.0%)	$35,900	17.5%	$6,296	41.2%	$14,802	41.2%	$14,802
Administration (2.0%)	$71,800	17.5%	$12,593	41.2%	$29,604	41.2%	$29,604
Permits, Agency Approvals (3.0%)	$107,700	17.5%	$18,889	41.2%	$44,405	41.2%	$44,405
Engineering Surveys (2.5%)	$89,750	17.5%	$15,741	41.2%	$37,004	41.2%	$37,004
Land/ROW (3.3%)	$118,470	17.5%	$20,778	41.2%	$48,846	41.2%	$48,846
TOTAL ALLIED COST (50.0%)	$1,795,000		$314,821		$740,089		$740,089
TOTAL PROJECT COST	$5,484,126		$988,205		$2,247,960		$2,247,960

Exhibit D - Update approval

1. Auburn: _____ Dated: _____

CWD: _____ Dated: _____

WD111: _____ Dated: _____

2. Auburn: _____ Dated: _____

CWD: _____ Dated: _____

WD111: _____ Dated: _____

EXHIBIT "A"
CITY OF AUBURN
RESOLUTION NO. 2721
ADOPTED 09/03/96

ORIGINAL

Exhibit E - Project Schedule

to

Interlocal Agreement 2

for

Lea Hill Intertie Project

Activity	Date
Execute IA2	September 3, 1996
Rates for service charges provided	September 15, 1996
CWD and WD111each to provide $200,000 deposit to Auburn	October 15, 1996
CWD and WD111 each to provide $200,000 deposit to Auburn	January 10, 1997
Complete design	
Pipelines	April 10,1997
Pump Station	May 10, 1997
River Crossing	June 10, 1997
CWD and WD111 each to provide $400,000 deposit to Auburn	April 25, 1997
Award first construction contract	May 21, 1997
CWD and WD111 each to provide $500,000 deposit to Auburn	July 6, 1997
CWD and WD111 each to provide $650,000 deposit to Auburn	November 8, 1997
Complete River Crossing	February 21, 1998
Complete Construction of Waterlines, and Pump Stations	September 19, 1998
Commissioning	September 30, 1998
Interim Project cost accounting	October 15, 1998
Complete Construction of Wells 6 and 7	November 8, 1998

EXHIBIT "A"
CITY OF AUBURN
RESOLUTION NO. 2721
ADOPTED 09/03/96

original

Exhibit E - Project Schedule

to

Interlocal Agreement 2

for

Lea Hill Intertie Project

Activity	Date
Execute IA2	September 3, 1996
Rates for service charges provided	September 15, 1996
CWD and WD111 each to provide $200,000 deposit to Auburn	October 15, 1996
CWD and WD111 each to provide $200,000 deposit to Auburn	January 10, 1997
CWD and WD111 each to provide $400,000 deposit to Auburn	April 25, 1997
CWD and WD111 each to provide $500,000 deposit to Auburn	July 6, 1997
CWD and WD111 each to provide $500,000 deposit to Auburn	January 5, 1998
Complete Construction of Wells 6 and 7	January 15, 1998
CWD and WD111 each to provide $600,000 deposit to Auburn	April 6, 1998
Complete River Crossing	July 6, 1998
CWD and WD111 each to provide $500,000 deposit to Auburn	July 6, 1998
CWD and WD111 each to provide $350,000 deposit to Auburn	October 5, 1998
CWD and WD111 each to provide $350,000 deposit to Auburn	May 7, 1999
Complete Construction of Waterlines and Pump Stations	May 14, 1999
Commissioning	May 28, 1999

Updated - ratified 2/1/97

Exhibit E - Project Schedule
(Continued)

Activity	Date
Interim Project Cost Accounting	June 30, 1999
CWD and WD111 each to provide $200,000 deposit to Auburn	July 5, 1999
Balancing Payment per Interim Accounting	July 26, 1999
Obtain Primary Water Rights for Wells 6 and 7	January 3, 2000
Final project Cost Accounting	March 17, 2000
Final CWD and WD111 Balancing Payment to Auburn	April 17, 2000

Exhibit E
Update Approval

1. Auburn: _____, Dated: 11-10-97
   CWD: _____, Dated: 10-09-97
   WD111: _____, Dated: 11/6/97

2. Auburn: _____, Dated: _____
   CWD: _____, Dated: _____
   WD111: _____, Dated: _____

3. Auburn: _____, Dated: _____
   CWD: _____, Dated: _____
   WD111: _____, Dated: _____

REF. H:\PROJ\PR616-17\E97-954

[redacted]

RECEIVED
2005
ROTHHILL ENG'G PARTNERS, LLC
BELLEVUE, WA

INTERIM WATER SALES AGREEMENT
between
COVINGTON WATER DISTRICT,
KING COUNTY WATER DISTRICT NO. 111
and the
CITY of AUBURN

This Agreement ("Agreement") is made and entered into this 22ND day of February, 2005, by and between Covington Water District (Covington) a Municipal Corporation, King County Water District No. 111 (WD III), a Municipal Corporation (collectively referred to herein as "the Districts") and the City of Auburn (Auburn), a Municipal Corporation.

Recitals:

A. The parties to this Agreement are also parties to "Interlocal Agreement 2 for the Lea Hill Intertie Project between Covington Water District, King County Water District #111, and the City of Auburn" ("IA2").

B. The parties desire to avoid unpredictable water sales and create a predictable and reliable cost for wholesale water to be sold by Auburn to the Districts.

C. By guaranteeing a minimum purchase of water for a given period of time, i.e., a take or pay approach, the cost of water, which to a significant extent is based on peaking factors, can be minimized for all of Auburn's customers.

[redacted]

D. This Agreement is intended to establish a rate for a fixed block of water for the mutual benefit of the parties of this Agreement.

E. It is in the interest of the Districts to have a predictable supply of water available, and in Auburn's interest to have a predictable and consistent source of revenue from the sale of such water.

F. The parties are authorized to enter into this Agreement under the authority of their respective enabling legislation and under the authority of Chapter 39.34 RCW, the Interlocal Cooperation Act.

G. The 1.5 million gallons of water per day ("MGD") take or pay water provided for in this Agreement is a portion of and not in addition to the 5 MGD as addressed in IA2.

Now, therefore, in consideration of the mutual covenants and promises

contained herein, and for other good and valuable consideration, the adequacy of which is hereby acknowledged, the parties hereby agree as follows:

1) **TAKE OR PAY:** The Districts agree to purchase an average of 1.5 MGD of water from Auburn on a take or pay basis. Take or pay shall mean that the Districts shall pay for 1.5 MGD whether or not the water is actually taken by the Districts (the "take or pay" water also referred to in this Agreement as "the Block" of water; provided

the Block of water may be modified as set forth in Paragraph 5 "Annual Review and Adjustment" herein). If the Districts cannot accept 1.5 mgd due to an emergency, as defined in Paragraph 7, they will be billed for the water they receive at the Block rate.

2) **CHARGES FOR WATER:** The Districts shall pay the rate per one hundred cubic feet of water ("CCF") for the 1.5 MGD Block shown in Exhibit 1, attached hereto, which is by this reference incorporated, except as further addressed in Paragraph 3 herein. Any water taken in excess ("Excess Water") during the summer (June 1 through September 30) shall be billed at the summer overage rate shown in Exhibit 1. Any water taken during an emergency within the Covington and/or WD 111 systems, as defined in Paragraph 7, shall be billed at the 1.5 mgd Block rate. Auburn shall send one monthly bill to WD 111 for all water purchased by the Districts.

3) **QUANTITY AVAILABLE / DELIVERED:** The 1.5 MGD Block of water shall be defined as a block of water to be delivered at an average rate of 1.5 MGD measured over a rolling 3 day period with total quantities delivered within any single day being no more than 10% more or less than 1.5 MGD at the Auburn Intertie Pump Station meter (Master Meter). If the Districts are unable for any reason to accept the Block of water, the minimum monthly payment shall be 1.5 MGD multiplied by the rate then in effect pursuant to Paragraph 2 above. If Auburn is

[redacted]

unable to deliver the amount of water requested by the Districts, up to the Block of water, then Auburn will bill the Districts for the amount of water actually delivered at the block rate pursuant to Paragraph 2 above. For the take or pay water Block provided for herein, the Districts will be served on the same basis and with the same reliability as service is provided to Auburn's retail customers, and any curtailment, restrictions or limitations on delivery shall be on same basis as curtailment, restrictions or limitations on delivery to Auburn's retail customers.

4) **ANNUAL TRUE UP OF THE TAKE OR PAY QUANTITY DELIVERED:** The Master Meter is located at the Lea Hill Intertie Pump Station to measure the flow of water.

The Master Meter will be read in January of each year to adjust for differences between the Master Meter and the water calculated to have been sold under this "take or pay" agreement. Billing for differences between the Master Meter and the calculated quantities will be charged or credited at the "take or pay" rate to the District's accounts.

5) **ANNUAL REVIEW AND ADJUSTMENT:** The initial Block of 1.5 MGD shall remain in effect through December 31, 2010. Each year, the "take or pay" Block may be increased by mutual agreement. By September 1 of each year the Districts shall notify Auburn of their

intent to continue without change or request an increase in the Block quantity. Any requested change in the Block quantity would be effective January 1 of the year following the request. In the event that neither party communicates its intent under this provision, the Block shall be deemed to continue unchanged.

6) **TERM:** This Agreement shall remain in full force and effect from the first day of the month following the execution of this Agreement through December 31, 2010; provided that this Agreement shall automatically be renewed for an additional year at the conclusion of the term of this Agreement or any extension thereof unless any party provides the others with notice of an intent not to extend this Agreement, which notice shall be received by the other parties not less than one year prior to the expiration of the term of this Agreement or any extension thereof. The termination of this Agreement shall not affect any rights or obligations under IA2.

7) **EMERGENCIES:** For purposes of this Agreement, an emergency shall be defined as resulting from a water shortage, a major water line break, fire demand, contamination to the water supply system, mechanical equipment failure, electrical equipment failure or Puget Sound Energy facility failure, or any other mutually agreed upon emergency within the water supply system. An emergency period shall be for no more than five (5) working days without written request

by the Districts and approval by Auburn in writing to extend the emergency period. The City may change, reduce or limit the time for or temporarily discontinue any water supplied for an emergency in excess of the Block quantity without notice. Prior to a planned interruption or limiting of emergency service, the City will notify the Districts of such not less than three days prior to the service disruption. The City agrees to use best efforts and reasonable diligence to notify the Districts as soon after it becomes aware of the need for emergency service disruption and further will, to the extent practical, limit the service disruption to daylight hours.

8) **JOINT AND SEVERAL OBLIGATION:** The obligation of the Districts as set forth therein shall be a Joint and Several obligation of the Districts. Allocation of the take or pay Block of water and the payment for such water shall be negotiated between the Districts outside of this Agreement.

9) **PRIOR AGREEMENT SUPERSEDED:** This Agreement supersedes and replaces the Interim Water Sales Agreement between Auburn, Covington and WD 111 executed on June 17, 2002.

In witness whereof the participants hereto have caused this Agreement to be executed by their proper officers on the 22nd day of February, 2005.

CITY OF AUBURN

PETER B. LEWIS
MAYOR

ATTEST:

Danielle E. Daskam,
City Clerk

APPROVED AS TO FORM:

Daniel B. Heid,
City Attorney

[redacted]

COVINGTON WATER DISTRICT

JUDY NELSON
GENERAL MANAGER

ATTEST:

APPROVED AS TO FORM:

District Attorney

KING COUNTY WATER DISTRICT NO. 111

WILLIAM C. HALL
GENERAL MANAGER

ATTEST:

APPROVED AS TO FORM:

District Attorney

[redacted]

Interim Water Sales Agreement
Between
Covington Water District,
King County Water District No. 111
And the
City of Auburn

Exhibit 1

Take or Pay Monthly Rates				
Year	Base Charge*	1.5 MGD and Winter Overage Rate	Summer Overage	
2005	$175.00	$0.85	1.5 MGD rate + $0.25	
2006	$175.00	$0.85	1.5 MGD rate + $0.25	
2007	$175.00	$0.85	1.5 MGD rate + $0.25	
2008	$175.00	0.85 X CPI**	1.5 MGD rate + $0.25	
2009	$175.00	2008 Rate X CPI**	1.5 MGD rate + $0.25	
2010	$175.00	2009 Rate X CPI**	1.5 MGD rate + $0.25	

*Covington and WD 111 are each responsible for paying a Base Charge of $175.00 per month per district.
** CPI means the Consumer Price Index – Urban for the Seattle – Tacoma – Bremerton area for the month of October of the prior year, divided by the October value of the year prior to that (see example below).

Example:

CPI for 2008 equals the October 2007 CPI value divided by the October 2006 value.

RECEIVED
NOV 2 0 2007
ROTHHILL ENGNR. PARTNERS, LLC
BELLEVUE, WA

CITY OF KENT, KING COUNTY WATER DISTRICT NO. 111 and CITY OF AUBURN INTERLOCAL AGREEMENT ESTABLISHING WATER SERVICE BOUNDARIES

THIS AGREEMENT ("Agreement"), made and entered into this 5th day of September, 2006, by and between the **City of Kent**, a Washington municipal corporation ("Kent"), **King County Water District No. 111**, a Washington municipal corporation ("WD #111"), and the **CITY OF AUBURN**, a Washington municipal corporation, ("Auburn"), all being duly organized and existing under and by virtue of the laws of the State of Washington (individually a "Party" and collectively the "Parties).

WITNESSETH:

WHEREAS, pursuant to RCW 35.A.11.040, Auburn has the legal authority to exercise its powers and perform any of its functions as set forth in RCW 39.34; and

WHEREAS, pursuant to Chapter 39.34 RCW, the Interlocal Cooperation Act, Auburn has the legal authority to cooperate with other localities and utilities on the basis of mutual advantage and the efficient provision of municipal services; and

WHEREAS, pursuant to Chapter 39.34 RCW, the Interlocal Cooperation Act, Kent has the legal authority to cooperate with other localities and utilities on the basis of mutual advantage and the efficient provision of municipal services; and

WHEREAS, pursuant to Chapter 39.34 RCW, the Interlocal Cooperation Act, WD #111 has the legal authority to cooperate with other localities and utilities on the basis of mutual advantage and the efficient provision of municipal services; and

WHEREAS, the parties recognize the responsibility of public water utilities to provide efficient and reliable service to their customers at reasonable cost; and

WHEREAS, Kent owns, and desires to be the water service provider for a property currently within the corporate limits of Kent, and within the service areas of Auburn and WD #111; and

WHEREAS, pursuant to Chapter 70.116 RCW, Public Water System Coordination Act, the Parties determined and agreed upon the water service areas between the Parties as set forth in the South King County Coordinated Water System

Plan ("Plan") and the Parties now desire to modify their water service area boundaries as agreed in this Agreement.

NOW, THEREFORE, in consideration of the terms and conditions set forth herein, the Parties agree as follows:

1. Water Service Area. WD #111 and Auburn agree to relinquish to Kent the water service area depicted on the map attached hereto as Attachment 1 and legally described in Attachment 2, which are by this reference incorporated herein. The Parties agree that the South King County Coordinated Water System Plan and the water service area boundaries as set forth in the Plan shall be modified to be in accordance with the Parties' water service area boundaries as set forth in Attachment 1.

2. Management, Regulation and Control of Water System. Kent, WD #111 and Auburn shall have the sole responsibility and authority to construct, maintain, manage, conduct and operate their water systems within their designated water service areas as depicted in Attachment 1, together with any additions, extensions and betterments thereto.

3. Future Annexations. The Parties agree that Kent shall provide water service to the area depicted in Attachment 1 without regard to the present corporate boundaries of the Parties and without regard to future corporate boundaries as they may be periodically altered through annexation.

4. Kent Comprehensive Water Planning. The terms of this Agreement will be included as an amendment to Kent's Comprehensive Water System Plan. Kent will submit to Auburn and WD #111 its Comprehensive Water System Plans and amendments thereto.

5. WD #111 Comprehensive Water Planning. The terms of this Agreement will be included as an amendment to WD #111's Comprehensive Water Plan. WD #111 will submit to Kent and Auburn its Comprehensive Water System Plans and amendments thereto.

6. Auburn Comprehensive Water Planning. The terms of this Agreement will be included as an amendment to Auburn's Comprehensive Water Plan. Auburn will submit to Kent and WD #111 its Comprehensive Water System Plans and amendments thereto.

7. Reliance. Each Party hereto acknowledges that the terms hereof will be relied upon by the other in its comprehensive planning to meet the needs of the service area designated herein.

8. Liability. Except as set forth in Section 12 regarding default, failure to perform or negligent conduct, the Parties agree that this Agreement shall not be a source of liability between the Parties for any failure or interruption of service in the service area of any Party as designated in this Agreement.

9. Government Notifications. Auburn will give notice of the adoption of this Agreement to Metropolitan/King County, to the Washington State Department of Health, to the South King County Regional Water Association, to the Water Utility Coordinating Committee, and to any other agency with jurisdiction over, or interest in, the terms hereof, and the Parties shall cooperate and assist each other in all reasonable manner in procuring any necessary approvals hereof by those agencies.

10. Boundary Review Board. In the event that implementation of the terms herein result in permanent water service to areas that will be outside the respective service boundaries of Kent, WD #111 or Auburn, the Parties will, at the time of such service, jointly file a notice of intention with the King County Boundary Review Board in accordance with Chapter 36.93.090 RCW and Chapter 57.08.047 RCW.

11. Alteration, Amendment or Modification. Kent, WD #111 and Auburn hereby reserve the right to alter, amend or modify the terms and conditions of this Agreement only upon written agreement of the Parties to such alteration, amendment or modification.

12. Indemnification and Hold Harmless. Each Party hereto agrees to protect, defend, and indemnify the other Parties, their officers, officials, employees and agents from any and all cost, claims, judgments and/or awards of damages, arising out of or in any way resulting from the indemnifying Party's, its employees, subcontractors or agents default, failure of performance, or negligent conduct associated with this agreement. Each Party agrees that its obligations under this provision extend to any claim, demand, and/or cause of action brought by or on behalf of any of its employees, or agents. The foregoing indemnity is specifically and expressly intended to constitute a waiver of each Party's immunity under Washington's Industrial Insurance Act, RCW Title 51, as respects the other Parties only, and only to the extent necessary to provide each Party with a full and complete indemnity of claims made by the other Party's employees. The Parties acknowledge that these provisions were specifically negotiated and agreed upon by them.

13. Integration. This Agreement constitutes the entire agreement of the Parties regarding the subject matter hereof, and there are no other representations or oral agreements other than those listed herein, which vary the terms of this Agreement. Future agreements may occur between the Parties to transfer additional or future service areas by mutual agreement.

14. Obligation Intact. Nothing herein shall be construed to alter the rights, responsibilities, liabilities, or obligations of Kent, WD #111 or Auburn regarding provision of water service, except as specifically set forth herein.

15. Duration. This Agreement shall take effect on the last day approved by all of the Parties and shall remain in effect until modified by written agreement of the Parties.

16. Recording. Pursuant to RCW 39.34.040, following the approval and execution of this Agreement by the Parties, this Agreement shall be filed with the King County Auditor.

CITY OF KENT

Approved by Motion No. _____ of the City of Kent, Kent, Washington, at its regular meeting held on the 1st day of August, 2006.

By:

Suzette Cooke, Mayor
City of Kent

Approved as to form:

Kristin M. Lawson Asst., City Attorney
City of Kent

KING COUNTY WATER DISTRICT NO. 111

Approved by Resolution No. _____ of the King County Water District No. 111, Kent, Washington, at its regular meeting held on the 8th day of June, 2006.

By:

Patrick Hanis, President
King County Water District No. 111

Approved as to form:

John W Milne, General Counsel
King County Water District No. 111

CITY OF AUBURN

Approved by Resolution No. 3920 of the City of Auburn, Washington, at its regular meeting held on the 5th day of September, 2006.

By:

Peter B. Lewis, Mayor
City of Auburn

Attest:

Danielle Daskam, City Clerk

Approved as to form:

Daniel B. Heid, City Attorney

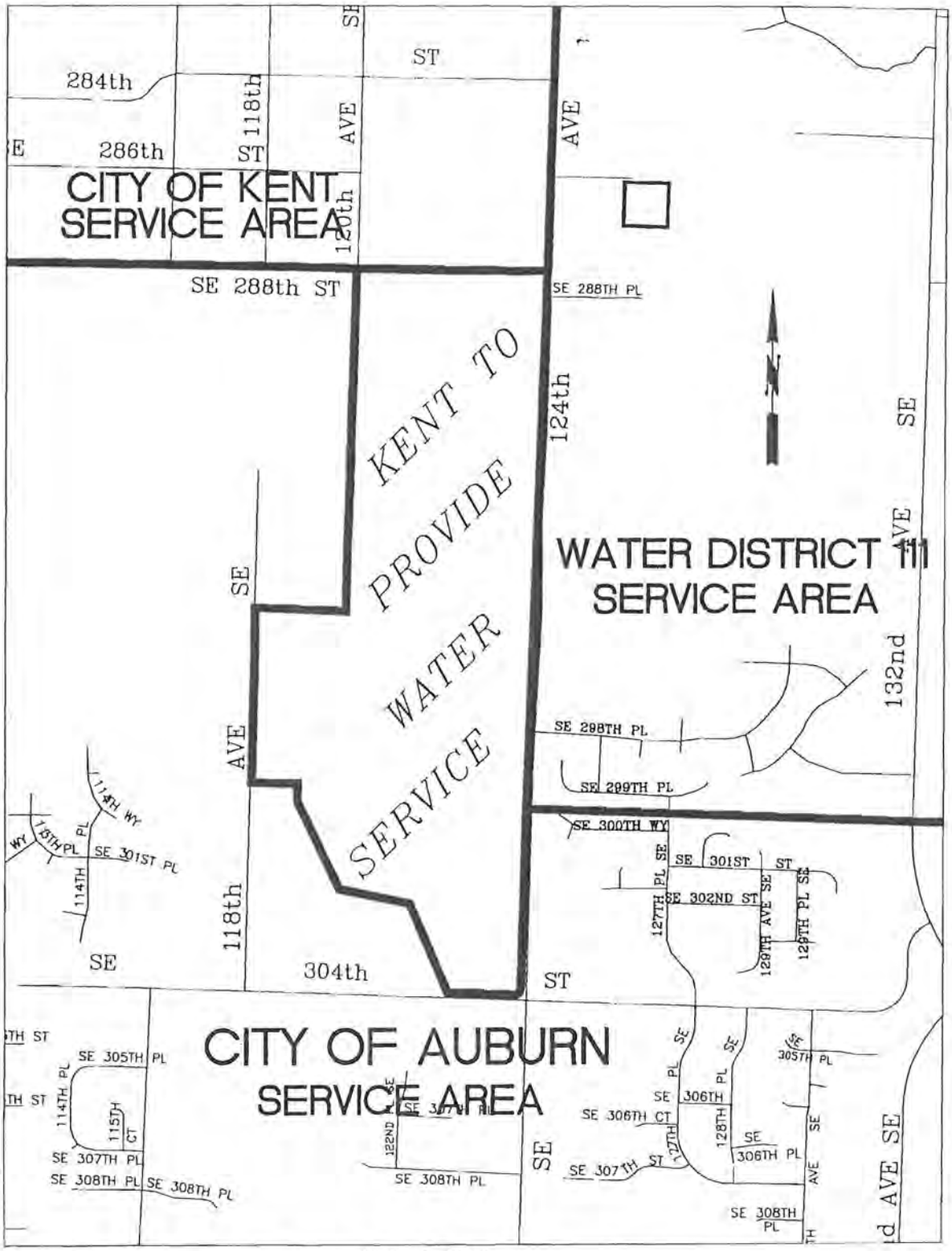

CITY OF KENT
KING COUNTY WATER DISTRICT NO. 111
AND CITY OF AUBURN
INTERLOCAL AGREEMENT ESTABLISHING
WATER SERVICE BOUNDARIES
ATTACHMENT 1

Attachment 2

Legal Description

THAT PORTION OF THE NORTHWEST QUARTER AND THE SOUTHWEST QUARTER OF SECTION 4, TOWNSHIP 21 NORTH, RANGE 5 EAST, W.M. IN KING COUNTY WASHINGTON, DESCRIBED AS FOLLOWS:

COMMENCING AT THE NORTHEAST CORNER OF GOVERNMENT LOT 3 IN SAID SECTION 4;

THENCE WEST ALONG THE NORTH LINE OF SAID GOVERNMENT LOT 3 A DISTANCE OF 30 FEET TO THE WEST MARGIN OF 124TH AVENUE SOUTHEAST AND THE TRUE POINT OF BEGINNING;

THENCE SOUTH ALONG SAID WEST MARGIN TO THE NORTHERLY MARGIN OF SOUTHEAST 304TH STREET;

THENCE WESTERLY ALONG SAID NORTHERLY MARGIN OF SE 304TH STREET TO THE SOUTHEAST CORNER OF THE PLAT OF CRYSTAL MEADOWS AS RECORDED IN VOLUME 194 OF PLATS AT PAGES 66 AND 67, RECORDS OF KING COUNTY;

THENCE NORTHWESTERLY ALONG THE NORTHEASTERLY EDGE OF SAID PLAT TO THE MOST NORTHERLY CORNER OF LOT 10 OF SAID PLAT;

THENCE WESTERLY ALONG THE NORTH EDGE OF SAID PLAT TO THE NORTHWEST CORNER OF LOT 15 OF SAID PLAT;

THENCE SOUTHERLY ALONG THE WEST LINE OF SAID LOT 15 TO A POINT 50 FEET NORTH OF THE SOUTHEAST CORNER OF TRACT 11 OF THE PLAT OF THE SOUND TRUSTEE COMPANY'S THIRD ADDITION, ACCORDING TO THE PLAT THEREOF RECORDED IN VOLUME 13 OF PLATS AT PAGE 100, RECORDS OF KING COUNTY, WASHINGTON;

THENCE NORTHWESTERLY TO A POINT ON THE NORTH LINE OF THE SOUTH HALF OF SAID TRACT 11, SAID POINT LYING 135 FEET WEST OF THE EAST LINE OF SAID TRACT 11;

THENCE CONTINUING NORTHWESTERLY TO A POINT ON THE NORTH LINE OF SAID TRACT 11, SAID POINT LYING 313.36 FEET WEST OF THE NORTHEAST CORNER OF SAID TRACT 11;

THENCE WESTERLY ALONG THE LINE COMMON TO TRACTS 10 AND 11 OF SAID PLAT OF THE SOUND TRUSTEE COMPANY'S THIRD ADDITION TO THE SOUTHWEST CORNER OF THE EAST HALF OF THE SOUTH 120 FEET OF SAID TRACT 10;

THENCE NORTHERLY ALONG THE WEST LINE OF THE EAST HALF OF THE SOUTH 120 FEET OF SAID TRACT 10 TO THE NORTHWEST CORNER OF THE EAST HALF OF THE SOUTH 120 FEET OF SAID TRACT 10;

THENCE WEST ALONG THE NORTH LINE OF THE SOUTH 120 FEET OF SAID TRACT 10 TO THE WEST LINE OF SAID TRACT 10;

THENCE NORTH ALONG SAID WEST LINE OF SAID TRACT 10 AND THE WEST LINE OF TRACT 9 OF SAID PLAT OF THE SOUND TRUSTEE COMPANY'S THIRD ADDITION TO THE NORTHWEST CORNER OF SAID TRACT 9;

THENCE EAST ALONG THE NORTH LINE OF SAID TRACT 9 TO THE NORTHEAST CORNER OF SAID TRACT 9 AND THE WEST LINE OF THE SOUTHEAST QUARTER OF THE NORTHWEST QUARTER OF SAID SECTION 4;

THENCE NORTH ALONG LAST SAID WEST LINE AND THE WEST LINE OF GOVERNMENT LOT 3 OF SAID SECTION 4 TO THE NORTHWEST CORNER OF SAID GOVERNMENT LOT 3;

THENCE EAST ALONG THE NORTH LINE OF SAID GOVERNMENT LOT 3 TO THE TRUE POINT OF BEGINNING.

JURISDICTION DIVIDER

City of Kent

AGREEMENT FOR SALE OF WATER BY CITY OF KENT TO KING COUNTY WATER DISTRICT #111

IT IS HEREBY AGREED on this 20th day of March, 1962 by and between Water District No. 111, King County, Washington, a municipal corporation existing under the laws of the State of Washington, hereinafter called the "District", by and through its duly elected qualified and acting commissioners, and the City of Kent, a municipal corporation of the third class of the State of Washington, hereinafter called the "City", by and through its duly elected qualified, acting and authorized officials as follows:

WHEREAS, the District has been formed by the electors in the vicinity of Lake Meridian for the purpose of providing water service, and

WHEREAS, the City operates a municipal water system and obtains its water from a source east of the City through a transmission line running generally parallel to the Kent-Kangley highway and from east to west through the District and

WHEREAS, the District and the City desire to enter into a contract providing for the sale of water by the City from its transmission line to the District for the needs of inhabitants of the District for domestic purposes,

NOW, THEREFORE, IT IS AGREED as follows:

Section 1. EFFECTIVE DATE. This contract shall take effect upon execution by the proper City and District officials; provided, however, that in the event no Utility Local Improvement District is formed within the District within two (2) years, the agreement would automatically terminate; and provided further, that no obligation to purchase water by the District or to sell water to the District by the City as hereinafter provided, shall become effective until the construction of the distribution system within the first U.L.I.D. has been completed and the District makes a written request for delivery of water; provided further, that in the event the construction within the first U.L.I.D. is not completed within four (4) years from the date of the agreement, then this agreement is terminated.

Section 2. TERM OF CONTRACT. Contract will be in full force and effect for --fifteen (15) --years from the date of execution and the District has the option to renew the contract for an additional -fifteen (15) --- years

EMERSON B. THATCHER
LAWYER
KENT, WASHINGTON

period under the terms and conditions set forth herein.

Section 3. METER AND PUMP STATION. The District agrees to construct, install and pay for a master meter and pumping station to be located approximately at the intersection of the Kent-Kent-Kent Highway and 148th Avenue Southeast, as a part of the initial water system construction under the first U.L.I.D; provided, however, that all plans and specifications of the District relating to pumping stations, controls, and storage facilities, and appurtenances, shall first be submitted to the City of approval prior to any construction thereof. The point of delivery of water by the City to the District shall be the inlet to the master meter.

Section 4. SERVICE FOR CUSTOMERS WITHIN THE DISTRICT. It is agreed that upon completion of construction of a water distribution system within the District and upon written notification to the City by the District that they are ready to provide water service the City will discontinue water service to all customers within the District, on the date, or as soon thereafter as is physically possible, that the District stipulates they will be prepared to commence water service, which can be served by the District's system; provided, however, that those customers are served by water which the District purchases from the City.

Section 5. ANNEXATION. The provisions of this agreement apply to customers within areas that are annexed to the District in the future.

Section 6. RATES. The District agrees to pay the City for all water delivered at the delivery point One Dollar ($1.00) per customer of the District per month plus 11¢ per 100 cubic feet of water delivered to the District, to 350,000 cubic feet, and 9¢ per 100 cubic feet of water delivered to the District in excess of 350,000 cubic feet, in any one month. The charge of One Dollar per customer shall remain constant during the life of the agreement, but the charges provided for delivery of water per 100 cubic feet is subject to change by the City provided that such change shall not exceed a direct proportion to the percentage increase in residential water rates within the City. Such percentage increase is to be computed by applying the new water rates in the City to the average monthly residential water consumption for the most recent full calendar year, and dividing the total

EMERSON B. THATCHER
LAWYER
KENT, WASHINGTON

average annual revenue per residential City customer derived therefrom, by the average annual revenue per residential customer obtained by applying the old water rates within the City to the same average residential usage per month for the same period. The charge per 100 cubic feet of water shall be computed to the nearest one hundredth of a cent.

Section 7. METERS IN PLACE. It is agreed that because the meters, service lines and appurtenances in place in the District at the time the City commences water delivery to the District have been paid for by the customers using them, the City will deed to the District all such meters and service connections of all customers to be served by the District. The same provision shall apply to customers of the City to which the District would provide service in the future at such time as the District commences service.

Section 8. QUALITY OF WATER. The City makes no guarantee as to the quality of water except that it will be of like quality to that delivered to domestic water customers within the City.

Section 9. QUANTITY OF WATER. The District does not demand and the City does not guarantee to deliver any specified minimum quantity of water except that the City agrees to use reasonable diligence in providing a constant supply of water to the District consistent and in proportion to all water usage in the City. If the City finds it necessary to enforce sprinkling regulations the District agrees to put the same regulations into effect. All consumers in the District shall submit to and comply with all ordinances and regulations of the City governing the consumption of water in the District and the District agrees to adopt appropriate rules and regulations governing the use of water and agrees to maintain its water system free from unnecessary leaks.

Section 10. PAYMENTS. The City shall read the meter at periodic intervals of approximately thirty (30) days on or before the 20th day of each month. The charges herein provided for shall be paid by the District to the City monthly. The City shall submit invoice containing statements of master meter readings as of the 20th day of the month for the preceding month and the District shall furnish to the City on the 20th day of the billing month a certified statement showing the total number of customers

supplied by the District with water service for the monthly period immediately preceding the date of such statement. It is recognized that the District can make payment only upon claim processed through the County Treasurer and payment shall be made by the District as soon as possible after receipt of statement from the City and in any event not later than the 10th of the second month following the date of meter reading. In the event the meter fails to register, or obviously registers incorrectly, the amount of water delivered through said meter shall be estimated on the basis of the meter reading for the same month, or months, during the preceding year when said meter was last functioning.

Section 11. PRIORITY. The City agrees that it will not by future contract with others, so reduce its supply that the District could not be served adequately.

Section 12. ACCESS TO FACILITIES AND RECORDS. Either party shall be entitled to inspect the facilities of the other at any reasonable time. Both parties agree to make mutually available such information or records as are at their disposal and as may be reasonably necessary, properly to implement any section of this contract.

Section 13. NON-ASSIGNABILITY. Neither this contract nor any interest therein shall be transferred or assigned by the District without prior written consent of the City.

Section 14. FAILURE TO PAY. In the event that the District should fail to make any payment to the City for a period of sixty (60) days after the same becomes due, the City shall have the right to terminate further water services until such delinquency is cured.

IN WITNESS WHEREOF the parties have hereunto set their hands the day and year first above written.

KING COUNTY WATER DISTRICT NO. 111

By: _____
President & Commissioner

By: Ivan L. Robertson
Commissioner

By: Arthur L. Michelsen
Commissioner

Attest: Arthur L. Michelsen
Secretary, Board of Commissioners.

Attest: Thomas Budge
City Clerk

THE CITY OF KENT

By: Alex Thomson
Mayor

EMERSON B. THATCHER
LAWYER
KENT, WASHINGTON

SUPPLEMENTAL AGREEMENT FOR SALE OF WATER
BY CITY OF KENT TO
KING COUNTY WATER DISTRICT NO. 111

THIS AGREEMENT, made and entered into this 5th day of ~~May~~ June, 1966, by and between THE CITY OF KENT, a municipal corporation of the third class of the State of Washington, hereinafter called "City," and KING COUNTY WATER DISTRICT NO. 111, a municipal corporation existing under the laws of the State of Washington, hereinafter called "District;"

W I T N E S S E T H:

THAT WHEREAS, these parties have heretofore entered into an Agreement for the sale of water by the City to the District, under date of March 20, 1962, and

WHEREAS, Section 1 said Contract Agreement specifies "That in the event that the construction within the first ULID is not completed within four (4) years from the date of the Agreement, then this Agreement is terminated." and

WHEREAS, construction on said ULID was commenced by the District prior to the expiration of said four (4) year terms, but has not been completed within said four (4) year period, and

WHEREAS, it is the mutual desire of these parties that said termination clause be voided and that said Agreement of March 20, 1962 be and remain in all its terms, conditions and covenants an effective Agreement between these parties,

NOW, THEREFORE, it is hereby covenanted and agreed by and between these parties as follows:

1. That in consideration of the fulfillment of the

terms and conditions of said Agreement for Sale of Water, dated March 20, 1962 and the efforts made by the District toward construction of its pipelines, improvements and appurtenances under the designation of ULID No. 2, presently in process of construction, it is hereby mutually agreed that provisions of Section 1 of said Agreement, dated March 20, 1962 by and between these parties to the effect that said Agreement should be terminated unless the first ULID of the District shall be completed within a four (4) year period after March 20, 1962, be and the same is hereby cancelled.

2. That in all other respects, the terms and conditions of March 20, 1962 shall be and remain in full force and effect between these parties.

IN WITNESS WHEREOF the parties have hereunto set their hands and seals the day and year first above written.

THE CITY OF KENT

BY: _____
ALEX THORNTON, MAYOR

ATTEST:

_____
MARIE JOHNSON, CITY CLERK

KING COUNTY WATER DISTRICT NO. 111

BY: _____
PRESIDENT AND COMMISSIONER

_____
SECRETARY AND COMMISSIONER

_____
COMMISSIONER

AGREEMENT FOR THE SALE OF WATER BY CITY OF KENT TO

KING COUNTY WATER DISTRICT NO. 111

This AGREEMENT made and entered into this 17th day of December, 1973, by the CITY OF KENT, a municipal corporation of the State of Washington, hereinafter called "CITY", and KING COUNTY WATER DISTRICT NO. 111, a municipal corporation existing under the laws of the State of Washington, hereinafter called "DISTRICT".

WITNESSETH:

WHEREAS, the parties desire to enter into a contract providing for the sale of water by the CITY to the DISTRICT, NOW, THEREFORE

IT IS AGREED as follows:

(1) TERM OF CONTRACT. The effective date of this AGREEMENT shall be December 1, 1973. The CONTRACT shall be for a ten (10) year period with the DISTRICT having the option to renew for an additional ten (10) year period under the same terms and conditions as set forth herein, EXCEPT that the rate which the DISTRICT pays for water supplied by the CITY shall be subject to review at the time of renewal.

(2) RATES. The DISTRICT shall pay to the CITY for all water delivered 13.5 cents per 100 cubic feet. In the event, however, that for any reason the CITY is unable to supply its customers from its own source of water and must purchase water from another source, the charge to the DISTRICT for such water purchased by the CITY shall be negotiated in the event the CITY must pay more than 13.5 cents per 100 cubic feet for such water.

(3) METER CHARGE. A monthly meter charge of seventy (70) dollars for the existing 8 inch meter shall be paid by the DISTRICT. If any additional connections are made by the DISTRICT, the connection and meter charge will be

Negotiated.

(4) CONSERVANCY COUNSELING. The CITY and DISTRICT will advise and counsel with each other concerning the development of water levels and storage.

(5) MAINTENANCE AND OPERATION. If at any time during the life of this CONTRACT the DISTRICT should decide to contract for maintenance and operation of its facilities, the DISTRICT will afford the CITY the first opportunity to contract for said services.

(6) PAYMENTS. The CITY shall read the meter or meters once each month at approximately thirty (30) day intervals. It is recognized that the DISTRICT can make payment only upon claim processed through the County Treasurer and payment shall be made by the DISTRICT as soon as possible after receipt of statement from the CITY, and in any event, not later than the tenth (10th) of the second month following the presentation of the bill. In the event the meter or meters shall fail to register, or obviously register incorrectly, the amount of water delivered through said meter or meters shall be estimated on the basis of the meter readings for the same month, or months during the preceding year, when said meter or meters were properly functioning.

(7) ACCESS TO FACILITIES AND RECORDS. Each party shall be entitled to inspect the facilities of the other at any reasonable time. Both parties agree to make mutually available such information or records as are at their disposal and as may be reasonably necessary to properly implement any section of this CONTRACT.

(8) NON-ASSIGNABILITY. Neither this CONTRACT nor any interest therein shall be transferred or assigned by the DISTRICT

without prior written consent of the CITY.

(9) CANCELLATION OF PRIOR AGREEMENTS. Agreements previously entered into between the parties dated March 20, 1962 and July 13, 1966, be and same hereby are cancelled.

(10) ENTIRE AGREEMENT. This CONTRACT constitutes the entire agreement of the parties relative to the sale of water by the CITY to the DISTRICT. This CONTRACT can be changed or amended only by subsequent written agreement of the parties.

(11) FAILURE TO PAY. In the event that the DISTRICT should fail to make any payment to the CITY for a period of sixty (60) days after the same becomes due, the CITY shall have the right to terminate further water services until such delinquency is cured.

IN WITNESS WHEREOF the parties have hereunto set their hands the day and year first above written.

KING COUNTY WATER DISTRICT NO. 111

By _____
President and Commissioner

By _____
Commissioner

By _____
Commissioner

ATTEST:

_____
Secretary, Board of Commissioners

CITY OF KENT

By _____
Mayor

ATTEST:

_____
City Clerk

AGREEMENT BETWEEN WATER DISTRICT NO. 111 AND THE CITY OF KENT FOR PROVIDING WATER SERVICE TO CHORAK SQUARE, DIVISIONS 1 and 2, A PLATTED AREA IN KING COUNTY, WASHINGTON

WHEREAS, a platted area of King County, Washington, known as Chorak Square, Divisions 1 and 2, requires an adequate water supply to assure its orderly development, and

WHEREAS, the area is within the City's franchise area and the City's Comprehensive Water Plan contemplates that the City will serve the area with water, and

WHEREAS, the City does not presently have the capacity to provide an adequate supply of water to the area from its existing system, and

WHEREAS, the District has the present capability to serve the area with water, and

WHEREAS, the City is presently serving or is capable of serving the area with sanitary sewer, NOW, THEREFORE, the City and the District hereby agree as follows:

1. The District shall temporarily serve the area known as Chorak Square, Divisions 1 and 2, described as:

   The following portion of Section 33, T 22 N, R 5, E.W.M. in King County; the north 1/2 of the SW 1/4 of the NE 1/4 less County Roads.

with an adequate supply of water for domestic purposes.

2. The District shall negotiate with the Developer of the area as if the area were within its franchise area, and shall be solely responsible for all details of development including main extensions and water meters. The District shall do its own billing and collecting during the term of this Agreement.

3. The City shall serve the area with sanitary sewer and shall do its own billing and collecting therefor.

4. In the event that upon termination of this Agreement the District has any unamortized costs or expenses, directly related to its performance of this Agreement, the City shall reimburse the District for said costs or expenses.

5. At such time as the City is able to provide adequate water service to the area, the City shall give at least sixty (60) days advance notice to the District of its intent to serve the area after which time this Agreement shall terminate.

6. Upon termination of the Agreement, the City shall assume responsibility for maintenance of those portions of the system that are within its franchise area. The District will provide all necessary customer data to the City so that the City will be able to assume the responsibility of billing and collecting for the water service.

DATED this 15th day of July, 1974.

KING COUNTY WATER DISTRICT NO. 111

By James E. Hougardy
President and Commissioner

By _____
Commissioner

By _____
Commissioner

ATTEST:

_____
Secretary, Board of Commissioners

CITY OF KENT

By _____
Isabel Hogan, Mayor

ATTEST:

_____
Marie Jensen, City Clerk

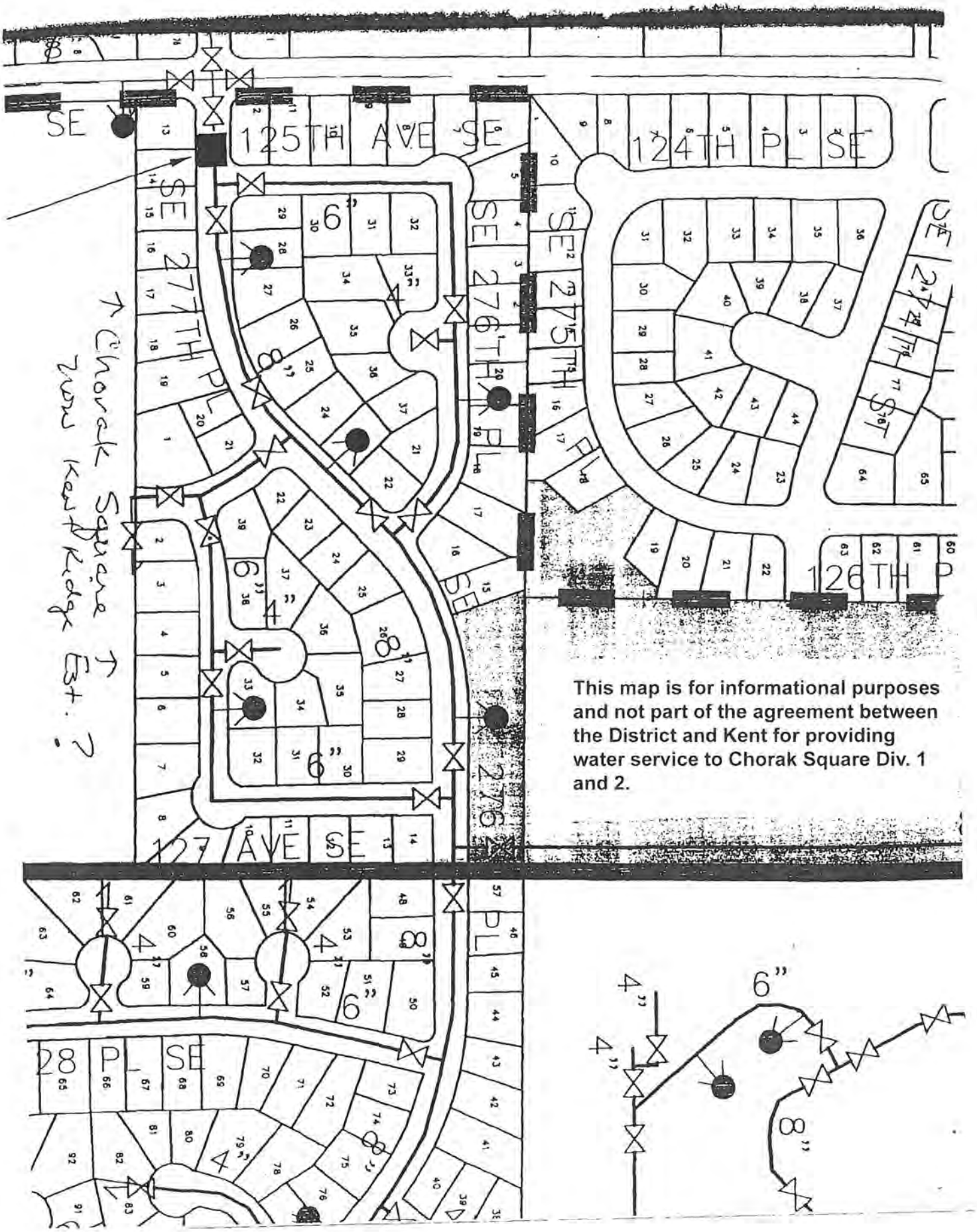

This map is for informational purposes and not part of the agreement between the District and Kent for providing water service to Chorak Square Div. 1 and 2.

AGREEMENT ESTABLISHING USE AND

SERVICE AREAS OF THE PARTIES

AGREEMENT between King County Water District No. 111, a special purpose district of the state of Washington, hereinafter called "District," and the City of Kent, a municipal corporation of the state of Washington, hereinafter called "City."

1. Purpose. The District and the City have previously informally agreed to the establishment of a boundary between the service areas of the two parties and are now desirous of confirming the previous understanding and agreement in writing.

2. Agreement. It is hereby agreed between the parties that the boundary between the areas served by each of the parties shall be as follows:

> Beginning at the South one-quarter corner of Section 33, Township 22 North, Range 5 East, W.M.;
>
> thence North along the West line of the East 1/2 of said Section 33 to the Southeast corner of the NW 1/4 of the NE 1/4 thereof;
>
> thence East along the South line of said NW 1/4 of the NE 1/4 to a point 440 feet east of the Southeast corner thereof;
>
> thence northerly and parallel with the east line of said NW 1/4 of the NE 1/4 to the South line of the North 1/2 of the North 1/2 of said NW 1/4 of the NE 1/4;
>
> thence east along the south line of said North 1/2 of the North 1/2 to the Southeast corner thereof;
>
> thence North along the East line of said NW 1/4 of the NE 1/4 to the Northeast corner thereof;
>
> thence West along the North line of said Section 33 to the East line of the Big "K" Addition No. 2 according to the Plat thereof recorded in Vol. 67 of Plats, page 66, records of King County, Washington;

thence North along said east line to the Northeasterly line thereof;

thence Northwesterly along said Northeasterly line to the Northeast corner of the Big "K" Addition, as recorded in Vol. 78 of Plats, Page 16, Records of King County, Washington;

thence continuing Northwesterly along the Northeasterly line of said Big "K" Addition, to its intersection with the east margin of 124th Ave. SE;

thence North along said East margin to its intersection with the Southwesterly margin of S.R. 516 (Kent-Kangley Road);

thence Northwesterly to the intersection of the West margin of 124th Avenue SE with the Southwesterly margin of S.R. 516;

thence Northerly to the intersection of the West margin of 124th Avenue SE with the Northeasterly margin of said S.R. 516;

thence Northwesterly along said Northeasterly margin to the Northwesterly line of the following described parcel:

> Beginning at a point on the N line of the NE 1/4 of the SW 1/4 of Sec. 28, Township 22 North, Range 5 E.W.M., in King County, Washington, distant N 89"59' E 841.7' from the NW corner of the said NE 1/4 of the SW 1/4 and the true point of beginning; thence continuing north 89"59'00" E 154.3'; thence S 28"38'00" West 478.9' to the N line of the Kent-Black Diamond Highway; thence N 62"09'00" W along said N line of the said Hiway 134.5' to a point which is S 28"38'00" W of the point of beginning; thence N 28"38'00" E 407.0' to said true point of beginning.

Thence Northeasterly along said Northwesterly line to the North line of said NE 1/4 of the SW 1/4;

thence West along said North line to its intersection with a line that is 495 feet West of and parallel with the NW 1/4 of Section 28, T 22 N, R 5 E, W.M.;

thence North along a line that is 495 feet West of and parallel with said NW 1/4, and the West 1/2 of Section 21, T 22 N, R 5 E, W.M., to the North line thereof.

District shall serve the area lying generally east of said boundary line and City shall serve the area lying generally west of said boundary line.

DATED: 23rd August, 1978.

KING COUNTY WATER DISTRICT NO. 111

By _____
Gary G. Cline, Commissioner

By _____
Robert R. Sparks, Commissioner

By _____
Charles E. Wilson, Commissioner

CITY OF KENT

By _____
Mayor, Isabel K. Hogan

By _____
Clerk, Marie Jensen

AGREEMENT FOR JOINT MAINTENANCE AND OPERATION

OF

WATER STORAGE FACILITY

AGREEMENT between City of Kent, a municipal corporation of the State of Washington, hereinafter called "City", and King County Water District No. 111, a special purpose district of the State of Washington, hereinafter called "District".

1. Purpose. The City and the District previously entered into an agreement dated November 21, 1977, entitled "Agreement for Construction of Water Storage Facilities." Pursuant to the Agreement, a water storage facility is being constructed on property owned by the District as more fully described on the aforementioned Agreement.

2. Service Area. Attached hereto as Exhibit A and by this reference incorporated herein is a map describing the service area of each of the parties.

3. Pumping Facilities for Reservoir Supply. City has completed construction of a pumping facility known as the East Hill Booster Station which will supply water to the storage facility referred to in paragraph 1 above. The City has constructed or intends to construct the following mains to provide transmission capability to the storage facility:

a. A 12-inch water main on 116th Avenue Southeast;

b. An 18-inch water main on 98th Avenue South;

c. A 16-inch water main on Southeast 244th Street.

The parties understand and contemplate that until the 18-inch and 16-inch mains referred to herein are completed, the District will need to continue to operate their present pumping station located at Kent-Kangley Road and 150th Place S.E. to supply peak demands.

4. Beneficial Interests.

a. The water storage facility is designed as a joint facility to furnish each party a certain capacity of water storage. Each party shall share in the cost of the facility in the same proportion as the party is entitled to share in its use. The beneficial ownership interests of the parties are as follows:

1. City - - 57%

2. District - - 43%

b. Four master water meters will be required to intertie the water systems of the City and the District. The meters shall be located as follows:

1. S.E. 256th Street meter located 495 feet west of 124th Avenue S.E. referred to herein as Meter 1.

2. S.E. 282nd Street meter located at 124th Avenue S.E. referred to herein as Meter 2.

3. Springwood connection meter located at S.E. 277th Place and 124th Avenue S.E. referred to herein as Meter 3.

4. Existing meter at the pumping station

located at Kent-Kangley Road and 150th Pl. S.E. referred to herein as Meter 4.

The District has acquired and installed Meters 1, 2 and 3 and shall pay for an annual calibration of each such meter. The City shall maintain all of the meters in accordance with the maintenance provisions described in Paragraph 10 hereafter.

c. In the design of the facility, size has been determined by combining the requirements of the parties, and it is the intent of this agreement that each party shall be entitled to use the facility in the same manner as though the party had constructed its own facility having the same capacity as the share of the joint facility to which the party is entitled. It is agreed that the storage facility will have a total capacity of 3.5 million gallons and that the beneficial interests of the parties in the reservoir will be as follows:

Party	% of Interest	Size of Interest Gallons
City of Kent	57	1,995,000
Water District No. 111	43	1,505,000

It is intended that the City shall be entitled to use the reservoir in the same manner as it could make use of all of the capacity of a single 1,995,000 gallon reservoir. The District shall be entitled to use the reservoir in the same manner as it could make use of all of the capacity of a single 1,505,000 gallon reservoir.

d. No party shall be entitled to withdraw more water than an amount equal to the total capacity of the storage

facility plus the total amount of water being supplied from the various sources during any excess demand interval, multiplied by the percentage of beneficial interest of that party.

e. The foregoing limitation shall not apply in case of emergency caused by an unexpected break in a main, a major fire, or other unusual sudden occurrence not general to the area served by the facility. During the period of emergency, a party may withdraw water at a greater rate than would otherwise be permitted provided such withdrawal does not jeopardize the normal supply required by the other parties.

5. Control Board. There shall be a control board consisting of three members--one water commissioner from the District, one city councilman, and one person to be chosen by said councilman and said commissioner. Each of the parties may and/or the parties jointly may recall their representative and appoint a replacement at any time. The members of the board shall elect a chairman from among the members who shall preside over the meetings. The board may adopt rules of procedure governing its operation. Decisions shall be made by the affirmative vote of at least two members. Meetings of the control board, other than regularly scheduled meetings, may be called by the chairman or by any two members on written notice sent by certified mail at least three days'

before the date of the meeting.

6. Powers and Duties of Control Board. In order to carry out the purpose of this agreement, and within its provisions, the control board, by majority vote, shall determine such matters of operating policy as may not be specifically covered herein and as may arise from time to time. The board may appoint an operating committee consisting of one or more employees of the parties with such powers and duties as may be determined by the board. The board shall meet at least semi-annually in April and October at a time mutually convenient to the members, which meetings may be waived by 30 days written notice in the event it is determined that the meeting is not necessary.

7. Operating Agent. The City shall be the agent of the parties, acting under the direction of the control board, in operating and maintaining the joint storage facility pursuant to this agreement.

8. Insurance. The control board shall determine the nature and amount of hazard and liability insurance to be provided for the joint facilities and their operation. City shall procure such insurance and the cost shall be prorated between the parties in accordance with the beneficial interest of the party as set forth in Paragraph 4 herein, or as subsequently determined by the control board as fairly

representing the proportion of benefit each party is entitled to receive from the joint facility. Each party shall be entitled to obtain any additional insurance.

9. Water. The City will bill the District for its share of water consumed. The initial cost of water shall be determined in accordance with previous agreements between the City and the District.

10. Expenses.

a. The City shall bill the District for its share of the operating expense incurred periodically and the District shall remit its share of said expense promptly to the City. The City will furnish the District a monthly account of receipts and disbursements.

b. The expected regular recurring fixed expenses of administering the joint storage facility shall be paid monthly by the City. The City shall bill the District quarterly for its proportionate share of the fixed monthly expenses and the District shall remit its share of said expenses promptly to the City.

c. The sharing of expenses described above between the City and the District will be in the following initial proportions:

City of Kent	57%
Water District No. 111	43%

The proportionate contributions above may be adjusted in the

future by the control board to reflect actual use or benefit derived by each of the parties from the facility.

11. Effective Date. The effective date of this agreement is December 1, 1978. The District shall be billed and shall reimburse the City as set forth above for recurring expenses and any nonrecurring expenses which have occurred prior to the effective date of this agreement.

DATED this 5 day of Dec, 1978.

CITY OF KENT

By _____
Mayor

By _____
Clerk

WATER DISTRICT NO. 111

By _____
Commissioner

By _____
Commissioner

By _____
Commissioner

EASTHILL WATER MAIN OPERATIONS CONTRACT

THIS AGREEMENT is entered into this 23 day of JUNE, 1983, between the CITY OF KENT (the "City") and WATER DISTRICT NO. 111 of King County (the "District"), municipal corporations under the laws of the State of Washington (the "Parties"). This Agreement is entered into in accordance with RCW 35.13A.070.

WHEREAS, the City has formed Local Improvement District No. 309 ("LID 309") to improve the distribution of water to customers within the City's and the District's service areas; and

WHEREAS, some of the customers within LID 309 have historically been provided water by the City although they are within the District's service area; and

WHEREAS, customers within LID 309 but within the District's service area will pay a total of approximately $81,520, representing part of the costs of improvements, through assessments levied on their property; and the City will pay approximately $132,980, representing the balance of the costs of improvements within the District's service area, with the expectation that it will regain such constributions through charges-in-lieu-of-assessment charged to future customers; and

WHEREAS, the Parties desire to provide a method of

fairly apportioning the costs of LID 309 improvements within the District's service area; and

WHEREAS, it is advantageous to both Parties for the District to assume responsibility for providing service to the customers within its service area, and to assume responsibility for the operation abd maintenance of the distribution mains providing water to such customers; and

NOW, THEREFORE, in consideration of the mutual promises set forth below, the Parties agree as follows:

1. Upon completion of the construction of LID 309 and final acceptance of the LID 309 assessment roll by the City, both (1) the 8-inch distribution main on Kent-Kangley Road from 124th Avenue S.E. to 330 feet West of 132nd Avenue S.E., and (2) the 8-inch distribution main on 128th Place S.E. from Kent-Kangley Road to 475 feet southeasterly of Kent-Kangley Road (together the "Transferred Mains") will be operated and maintained by the District.

2. From the point in time stated in Paragraph No. 1, the District shall manage, operate and maintain the Transferred Mains together with service connections and appurtenances up to the property lines of (1) customers in the District's service area who are presently served by the City and who are within LID 309 (the customers within the legal description of Attachment A and shown as customers 7 through 31 on Map A, both the

Attachment and the Map being incorporated herein by reference) (the "Transferred Customers"); and (2) customers in the future connected to the Transferred Mains. The District shall operate and maintain the Transferred Mains in accordance with high engineering standards and in conformity with applicable standards and requirements of state and federal agencies having jurisdiction over such maintenance and operation.

3. The Transferred Customers shall receive water service from the District and shall pay the District its customary service charges; however, the Transferred Customers shall continue to make individual LID 309 assessment payments directly to the City, in the amounts in the assessment roll as determined by the City and as may be later amended.

4. The District shall connect and serve customers within the area described at Attachment B and Map B (incorporated herein by reference) (the "Future Customers"), whenever such customers seek service and have complied with the District's standard requirements for service. The ~~City~~ District shall charge each Future Customer a charge-in-lieu-of-assessment in such amounts as are determined by the City at the time the final assessment roll for LID 309 is adopted, and the District shall cooperate with the City to effect the efficient collection of such charges. The total charges-in-lieu-of-assessment shall not exceed $132,980, exclusive of interest and late payment

penalties. The ~~City~~ District shall collect such charges, interest and penalties at its own expense, and shall promptly transmit such collected charges (and interest and penalties) to the City.

5. The City shall own the Transferred Mains until all LID 309 assessments and charges-in-lieu-of-assessment levied on Future Customers (together with interet and penalties) have been paid to the City. The Transferred Mains shall become the property of the District when all assessments and charges-in-lieu-of-assessment have been paid.

6. The cost of any improvements to or in connection with the Transferred Mains, above and beyond the construction of the Transferred Mains, shall be borne by the District. By way of example, such additional improvements include but are not limited to fire hydrants, additional lengths of mains, or oversizing of mains.

7. The City shall obtain such permits from the State Department of Transportation, King County, and other government agencies, as are necessary for the construction of the Transferred Mains, and shall provide copies thereof to the District. When the District assumes the management, maintenance and operation of the Transferred Mains, the District shall take whatever actions are necessary to assume all responsibilities and costs under such permits, and shall act in accordance with the requirements of such permits.

8. In order to avoid duplication of water mains, the

Parties agree to take all steps necessary to transfer the property described at Attachment C and shown at Map C (both incorporated herein by reference) from the service area of the District to the service area of the City.

9. The District agrees to indemnify and hold harmless the City and all of its officers, agents, employees, or otherwise, from any and all liability, loss or damage, including reasonable cost of legal defense, they may suffer as a result of claims, demands, actions, or damages to any and all persons or property, costs of judgments against the City which result from, arise out of, or are in any way connected with the District's management, maintenance and operation of the Transferred Mains.

The City warrants the Transferred Mains to be free of any defects in material or workmanship for a period of one (1) year in accordance with warranties provided to the City by any contractors performing work on LID 309.

10. The rights and duties of either Party under this Contract may not be assigned without the written consent of the other Party.

11. At all reasonable times, each of the Parties shall have access to and the right to examine and copy such records of the other as may be needed for the purpose of auditing compliance with this Contract.

12. All claims, demands, disputes, differences, and

misunderstandings concerning this Agreement and its interpretation that may arise between the Parties shall be submitted to and be determined and settled by arbitration in the following manner:

Each party to the dispute shall appoint an arbitrator and the two arbitrators so chosen shall appoint a third arbitrator. In the event the two arbitrators so chosen cannot agree upon a third arbitrator, such third arbitrator shall be appointed by the American Arbitration Association. Rules then pertaining of the American Arbitration Association shall control. Decisions of the arbitrators shall be final and binding on the parties. The arbitration shall be governed by the Superior Court of King County pursuant to Chapter 7.04 RCW.

13. This Contract is binding on the Parties, their suyccessors and assigns, and shall remain in effect until all LID 309 assessments and charges-in-lieu-of-assessment levied on customers connected to the Transferred Mains (together with interest and penalties) have been paid to the City, or until such time as it is mutually terminated by the parties.

14. It is agreed by the Parties that if any party, term, or provision of this Contract is held by the Courts to be illegal, the validity of the remaining provisions shall not be affected, and the rights and obligations of the Parties shall be construed and enforced as if the Contract did not contain the

particular provision held to be invalid.

15. This Conveyance and Agreement is effective the day and year first written above.

IN WITNESS WHEREOF, this Agreement and Conveyance is executed by the Parties by their authorized officers indicated below.

WATER DISTRICT NO. 111

By: _____
GARY G. CLINE, Commissioner

By: _____
CHARLES E. WILSON, Commissioner

By: _____
ROBERT R. SPARKS, Commissioner

CITY OF KENT

By: _____
Mayor

ATTEST:

_____
City Clerk

Revised: January 25, 1983

ATTACHMENT "A"

Preliminary Legal Descriptions of Lands to Be Assessed Under Local Improvement District #309 to be serviced by Water District #111

"NOTE"

King County Tax Roll Legal Descriptions used for this purpose.

The West 148.4 feet of the North 500.00 feet as measured on the West line of that porton of the Northwest 1/4 of the Southeast 1/4 of Section 28, Township 22N, Range 5E, W.M. in King County, Washington lying Southerly of Kent Kangley Road. EXCEPT any portion lying within 124th Avenue S.E.

AND ALSO

The East 200.00 feet of the West 348.4 feet of that portion of the Northwest 1/4 of the Southeast 1/4 of Section 28, Township 22N, Range 5E, W.M., in King County, Washington, lying Southerly of Kent Kangley Road.

AND ALSO

That portion of the West 512.60 feet of the Northwest 1/4 of the Southeast 1/4 of Section 28, Township 22N, Range 5E, W.M., in King County, Washington lying Southerly of Kent-Kangley Road. EXCEPT the West 348.4 feet.

AND ALSO

That portion of Section 28, Township 22N, Range 5E, W.M. in King County, Washington, described as follows:

Beginning at Point 512.60 feet East of Southwest corner of Northwest 1/4 of Southeast 1/4 Thence North 01°04'09" East 246.11 feet to the Southwesterly line of State Highway Thence Southeasterly along Highway 202.95 feet thence S40°23'52" West 158.41 feet to South line of Subdivision thence West 60.54 feet to beginning.

AND ALSO

That portion of Section 28, Township 22N, Range 5E, W.M. in King County, Washington, described as follows:

The East 390.00 feet of West 800 feet of Northwest 1/4 of Southeast 1/4 lying North of Kent-Black Diamond Road described as follows: beginning on North line of said road 230.00 feet Southeasterly of Southwest corner of said subdivision thence Northeasterly at right angles to said road 180.00 feet thence Southeasterly 60.00 feet thence Southwesterly 180.00 feet to North line said road thence Northwesterly 60.00 feet to Point of Beginning less State Highway.

AND ALSO

That portion of Section 28, Township 22N, Range 5E, W.M. in King County, Washington, described as follows:

The East 390.00 feet of West 800 feet of Northwest 1/4 of Southeast 1/4 lying North of Kent-Black Diamond Road described as follows: beginning on North line of said road 230.00 feet Southeasterly of Southwest corner of said subdivision thence Northeasterly at right angles to said road 180.00 feet thence Northwesterly 60.00 feet thence Southwesterly 180.00 feet to North line said road thence Southeasterly 60.00 to Point of Beginning less state Highway.

AND ALSO

That portion of Section 28, Township 22N, Range 5E, W.M. in King County, Washington, described as follows:

Beginning at intersections of Northeasterly line of Kent-Black Diamond South Road and West line of the East 390.00 feet of the West 800.00 feet of the Northwest 1/4 of the Southeast 1/4 thence North 180.00 feet thence Southeasterly parallel with the Northeasterly line of said road 90 feet to point designated "A" thence Southwesterly to point on Northeasterly line of Road 40.00 feet Southeasterly of West line of said East 390.00 feet of West 800 feet of said subdivision and designated point "B" thence Southeasterly along road 114.00 feet to Westerly line of 16 feet easement thence Northeasterly along said easement 180.00 feet more or less to Northwest corner thereof thence Northwesterly parallel with the Northeasterly line of Road 89.00 feet to True Point of Beginning thence continuing Northwesterly parallel with the road to point extending Northeasterly from Point "B" and passing through Point "A" thence Southwesterly to Point "B" thence Southeasterly along road 57 feet thence Northeasterly to True Point of Beginning less State Highway.

AND ALSO

That portion of Section 28, Township 22N, Range 5E, W.M. in King County, Washington, described as follows:

Beginning at the intersection of Northeasterly line of Kent-Black Diamond South Road and West line of East 390.00 feet of West 800.00 feet of Northwest 1/4 of Southeast 1/4 thence North 180.00 feet thence Southeasterly parallel with the road 90.00 feet thence Southwesterly to Point on road 40.00 feet Southeasterly of beginning thence Northwesterly 40.00 feet to beginning less portion for highway.

AND ALSO

That portion of the Southwest 1/4 of the Southeast 1/4 of Section 28, Township 22N, Range 5E, W.M. in King County, Washington, lying Northeasterly of Secondary State Highway #5-A. EXCEPT the North 175.00 feet thereof.

AND ALSO

That portion of Section 28, Township 22N, Range 5E, W.M. in King County, Washington, described as follows:

Beginning at the intersection of the West line of East 1120.00 feet of Southeast 1/4 of Southeast 1/4 with Northeasterly margin of State Highway thence Northerly along said line 62.60 feet to True Point of Beginning thence continuing Northerly 224.40 feet thence Southwesterly 213.00 feet more or less to a point on said margin 170.00 feet Northwesterly measuring along said margin from beginning thence Southeasterly along said margin 125.00 feet thence Northeasterly 45.00 feet more or less to the True Point of Beginning.

AND ALSO

That portion of Section 28, Township 22N, Range 5E, W.M. in King County, Washington, described as follows:
Beginning at the intersection of the West line of East 1120.00 feet of Southeast 1/4 of Southeast 1/4 with Northwesterly margin of State Highway thence Northwesterly along said margin 45.00 feet thence Northeasterly 45.00 feet more or less to a point on said West line 62.60 feet North of beginning thence North along said West line 57.40 feet thence S88°53'00"E 98.00 feet thence S17°01'16"W 171.47 feet thence Northwesterly along said margin 65.83 feet to beginning.

AND ALSO

The South 82.97 feet of the North 647.84 feet of the West 140.00 feet of the East 1120.00 feet of the Southeast 1/4 of the Southeast 1/4 of Section 28, Township 22N, Range 5E, W.M. in King County, Washington.

AND ALSO

That portion of Section 28, Township 22N, Range 5E, W.M. in King County, Washington, described as follows:

Beginning at the intersection of the West line of East 980.00 feet of Southeast 1/4 of Southeast 1/4 and Northerly line of Kent-Black Diamond Road thence N01°10'15" East 239.16 feet thence N88°53'00" West 42.00 feet thence South 17°01'16" West 171.47 feet to the Northerly line of road thence Southeasterly 118.01 feet to beginning less State Highway.

AND ALSO

The West 100.00 feet of the East 820.00 feet of the Southeast 1/4 of the Southeast 1/4 of Section 28, Township 22N, Range 5E, W.M. in King County, Washngton lying Northerly of State Highway #5A and EXCEPT the North 600.00 feet.

AND ALSO

The West 133.34 feet of the East 720.00 feet of the Southeast 1/4 of the Southeast 1/4 of Section 28, Township 22N, Range 5E, W.M. in King County, Washington, lying Northerly of State Highway 5-A. EXCEPT the North 600.00 feet.

AND ALSO

The West 133.33 feet of the East 586.33 feet of the Southeast 1/4 of the Southeast 1/4 of Section 28, Township 22N, Range 5E, W.M. in King County,

Washington lying Northerly of State Highway #5-A. EXCEPT the North 600.00 feet thereof.

AND ALSO

The west 133.33 feet of the East 453.33 feet of the Southeast 1/4 of the Southeast 1/4 of Section 28, Township 22N, Range 5E, W.M. in King County, Washington lying Northerly of State Highway #5-A EXCEPT the North 600.00 feet thereof.

AND ALSO

That portion of Section 28, Township 22N, Range 5E, W.M. in King County, Washington, described as follows:

Beginning 790.00 feet West of Southeast corner of Southeast 1/4 thence North 235.72 feet to South line State Highway #5 thence Northwesterly along said South line 74.88 feet to True Point of Beginning thence continuing on said South line 122.98 feet thence S53°49'00" West 134.11 feet to North line of County Road thence Southeasterly along said North line to a point that is S53°49'00" West 203.66 feet from true Point of Beginning thence North 53°49'00"E to True Point of Beginning. EXCEPT State Highway.

AND ALSO

That portion of Section 28, Township 22N, Range 5E, W.M. in King County, Washington, described as follows:

Beginning at Southeast corner of section thence West 790.00 feet thence North 01°09'25" East 235.72 feet to Southerly boundary of State Highway thence Northwesterly along said boundary 197.86 feet to True Point of Beginning thence S 53°49'00" West 134.11 feet to Northerly boundary of County Road thence North 19°14'46" West along said boundary 88.78 feet thence N 22°10'16"W along said boundary 187.14 feet to Southerly boundary of State Highway thence Southeasterly along said boundary 273.83 feet to True Point of Beginning.

AND ALSO

That portion of Section 28, Township 22N, Range 5E, W.M. in King County, Washington, described as follows:

Beginning 1320.15 feet West and 80.67 feet North of SE corner of Section thence continuing North 80.67 feet thence North 79°37'44" East 221.03 feet to Westerly line of County Road thence Southeasterly to point North 79°37'44" East of beginning thence S79°37'44" West to beginning.

AND ALSO

That portion of Section 28, Township 22N, Range 5E, W.M. in King County, Washington, described as follows:

Beginning 161.34 feet North of Southwest corner of Southeast 1/4 of Southeast 1/4 thence North 80.67 feet thence North 79°37'44"E 192.56 feet to Westerly line of County Road thence South 19°14'46" East 80.00 feet thence S79°37'44"W 221.03 feet to beginning.

AND ALSO

That portion of Section 28, Township 22N, Range 5E, W.M. in King County, Washington, described as follows:

Beginning on West line of Southeast 1/4 of Southeast 1/4 242.01 feet North of Southwest corner thence North along said West line 100.344 feet thence North 79°37'44" East 148.52 feet to West line of County road thence Southerly along said West line 100.00 feet thence S79°37'44" West 186.97 feet to beginning.

AND ALSO

That portion of Section 28, Township 22N, Range 5E, W.M. in King County, Washington, described as follows:

Beginning 342.35 feet North of Southwest corner of Southeast 1/4 of Southeast 1/4 thence North 105.73 feet thence N79°37'44" East 104 feet to Westerly line of County Road thence S22°10'16" East 105.71 feet thence S 79°37'41" West to beginning.

AND ALSO

That portion of Section 28, Township 22N, Range 5E, W.M. in King County, Washington, described as follows:

Beginning at point 448.08 feet North of Southwest corner of Southeast 1/4 of Southeast 1/4 thence North 79°37'44" East 104.00 feet to Southerly boundary of County road thence North 22°10'16" West 177.04 feet to Southerly boundary of State Highway thence Northwesterly along said boundary 60.45 feet to West line of subdivision thence S 231.09 feet to beginning.

AND ALSO

The North 600 feet of the West 100 feet of the East 820 feet of the Southeast 1/4 of the Southeast 1/4 of Section 28, Township 22 North, Range 5 East, W.M. in King County, Washington; AND the West 100 feet of the East 920 feet of that portion of the Southeast 1/4 of the Southeast 1/4 of Section 28, Township 22 North, Range 5 East, W.M. in King County, Washington lying North of Highway #5-A.

Charge in Lieu Of
L.I.D. 309 Legal Description
Prepared 12/15/82

ATTACHMENT "B"

That portion of the Northwest quarter of the Southeast quarter of Section 28, Township 22 North, Range 5 East, W.M., in King County, Washington, described as follows: That portion of the West 410 feet of said subdivision lying Northerly of Kent Kangley Road Except the North 560.00 feet, AND Except the West 30.00 feet thereof AND Except any portion thereof lying within State Highway;
AND ALSO that portion of the Northwest quarter of the Southeast quarter of Section 28, Township 22 North, Range 5 East, W.M., in King County, Washington, described as follows:

Beginning at the intersection of the East line of the West 410.00 feet of said subdivision and the Northeasterly line of State Highway 5-A; thence Southeasterly along said Highway a distance of 290.00 feet; thence Northeasterly at right angles a distance of 180.00 feet; thence Northwesterly parallel with or concentric with said highway a distance of 120.00 feet to the True Point of Beginning; thence Southwesterly to a point on the Northeasterly line of said Highway a distance of 170.00 feet, measured along said highway from the East line of the West 410.00 feet of said subdivision; thence Northwesterly along said highway a distance of 16 feet; thence Northeasterly parallel with the Southeasterly line of Tract herein described a distance of 180.00 feet; thence Northwesterly concentric with said highway a distance of 179.00 feet; thence Southwesterly to a line concentric with said Highway and which intersects the East line of the West 410.00 feet of said subdivision at a point a distance of 180.00 feet North of intersection of said line with Northeasterly line of said Highway; thence Northwesterly along said line to the East line of the West 410.00 feet of subdivision; thence North to a point 560.00 feet South of the North line of said subdivision; thence East a distance of 390.00 feet; thence South to a line extended Northeasterly from the most Southerly corner of the property herein described through to the True Point of Beginning; thence Southwesterly to the True Point of Beginning, Except State Highway.
AND ALSO that portion of the Northwest quarter of the Southeast quarter of Section 28, Township 22 North, Range 5 East, W.M., in King County, Washington, described as follows:

Beginning at the intersection of the Northerly line of Kent-Black Diamond Road and the West line of the East 390.00 feet of the West 800.00 feet of said subdivision; thence Southeasterly along said Road a distance of 97.00 feet to the True Point of Beginning; thence Southeasterly along said road a distance of 57.00 feet; thence Northeasterly along an existing easement to the Northwest corner thereof; thence Northwesterly parallel with said road a distance of 89.00 feet; thence Southwesterly a distance of 180.00 feet more or less to the True Point of Beginning; Except portion for State Highway;
AND ALSO that portion of the Northwest quarter of the Southeast quarter of Section 28, Township 22 North, Range 5 East, W.M. in King County, Washington, described as follows:

Beginning at a point on the Northeasterly line of State Highway #5-A a distance of 170.00 feet Southeasterly of the intersection of said Northeasterly line and the East line of the West 410.00 feet of said subdivision; thence Northeasterly at right angles a distance of 180.00 feet to the True Point of Beginning; thence Southeasterly concentric with the Northeasterly line of said highway to the East line of the West 800.00 feet of said subdivision; thence North to a point Northeasterly of beginning and a line extended through to the True Point of Beginning; thence Southwesterly to the True Point of Beginning
AND ALSO that portion of the Northwest quarter of the Southeast quarter of Section 28, Township 22 North, Range 5 East, W.M., in King County, Washington; described as follows:

That portion of said subdivision lying Southerly of State Highway; Except portion Northwesterly of a line running N 40°23'52" E from a point 573.14 feet East of the Southwest corner of said subdivision.
AND ALSO Lot 1, Block 1, Meridian Meadows, according to plat recorded in Volume 61 of Plats, page 46, records of King County, Washington.
AND ALSO all of Block 3, Meridian Meadows, according to plat recorded in Volume 61 of Plats, page 46, records of King County, Washington;
AND ALSO that portion of the Southwest quarter of the Southeast quarter of Section 28, Township 22 North, Range 5 East, W.M., in King County, Washington; described as follows:

The North 175.00 feet of said subdivision lying Northeasterly of Kent-Kangley Highway;
AND ALSO that portion of the Southeast quarter of the Southeast quarter of Section 28, Township 22 North, Range 5 East, W.M., in King County, Washington, described as follows:

Beginning at a point on the West line of the East 1120 feet of said subdivision a distance of 287.00 feet from the Northerly extension with the Northeasterly margin of State Highway; thence continuing North along the said West line a distance of 40.00 feet; thence West parallel with the North line of said Southeast quarter a distance of 202.00 feet more or less; thence South a distance of 110.00 feet more or less along the West line of said Southeast quarter to said highway margin; thence Southeasterly along said margin a distance of 126.00 feet to a point 170.00 feet Northwesterly from said Northerly extension; thence Northeasterly a distance of 213.00 feet more or less to the point of beginning.
AND ALSO that portion of the West 200.00 feet of the East 1120.00 feet of the Southeast quarter of the Southeast quarter of Section 28, Township 22 North, Range 5 East W.M. in King County, Washington, described as follows:

Beginning at the Northwest corner thereof, thence South along the West line to a point 564.81 feet North of the Northerly margin of State Highway and the True Point of Beginning; thence continuing South along said West line to a point 564.87 feet South of the North line thereof; thence East a distance of 140.00 feet; thence North parallel with said West line to a point East of the True Point of Beginning; thence West a distance of 140.00 feet to the True Point of Beginning.
AND ALSO that portion of the West 200.00 feet of the East 1120.00 feet of the Southeast quarter of the Southeast quarter of Section 28, Township 22 North, Range 5 East W.M., in King County, Washington; Except that portion described as follows:

Beginning at the Northwest corner of said subdivision; thence South along the West line to a point 564.81 feet North of the Northerly margin of State Highway 5-A and the True Point of Beginning; thence East a distance of 140.00 feet; thence South parallel with said West line to the Northerly margin of State Highway; thence Northwesterly along the Northerly margin to said West line; thence North along West line to the True Point of Beginning.
AND ALSO that portion of the Southeast quarter of the Southeast quarter of Section 28, Township 22 North, Range 5 East, W.M., in King County, Washington, described as follows:

Beginning 790.00 feet West of the Southeast corner of said subdivision; thence North to the Southerly margin of State Highway 5-A and the True Point of Beginning; thence Northwesterly along said margin a distance of 74.88 feet; thence S 53°49'00" W a distance of 74.00 feet; thence S 29°29'04" E a distance of 86.00 feet; thence S 82°15'34" E a distance of 80.00 feet more or less, thence N 01°09'25" E to the True Point of Beginning; Except portion for State Highway.
AND ALSO that portion of the Southwest quarter of the Southeast quarter of Section 28, Township 22 North, Range 5 East, W.M., in King County, Washington; described as follows:

That portion of said subdivision lying Easterly and Northerly of a line beginning at a point 960.00 feet East of the Southwest corner of said subdivision; thence N 01°04'09" E a distance of 335.57 feet; thence N 57°34'21" W a distance of 574.47 feet; thence N 01°04'09" E to the North line of said subdivision; Except portion lying Northeasterly of the Southwesterly margin of Kent-Kangley Highway; Except portion for State Highway.
AND ALSO that portion of the Northwest quarter of the Southeast quarter of Section 28, Township 22 North, Range 5 East, W.M., in King County, Washington; described as follows:

Beginning at the intersection of the Northerly line of State Highway 5A and the West line of the East 390.00 feet of the West 800.00 feet of said subdivision; thence Southeasterly along said road a distance of 290.00 feet to the True Point of Beginning; thence Northeasterly along the Tebbe Tract a distance of 180.00 feet; thence Southeasterly parallel with said road to the East line of the West 800.00 feet of said subdivision; thence South to the Northeasterly margin of said road; thence Northwesterly along said Road a distance of 199.00 feet more or less to the True Point of Beginning; Except that portion of State Highway.

Franchise Legal
L.I.D. 309
Prepared 12/15/82
Revised: 1/25/83

ATTACHMENT "C"

That portion of the Southwest quarter of the Southeast quarter of Section 28, Township 22 North, Range 5 East, W.M., in King County, Washington described as follows: Beginning at the Southwest corner of said subdivsion; thence North 921.00 feet to the True Point of Beginning; thence S 57°34'21" E a distance of 549.75 feet; thence N 01°04'09" E a distance of 686.31 feet more or less to the North line of said subdivision; thence West a distance of 470 feet more or less to the West line of said subdivision; thence South to the True Point of Beginning;

AND ALSO

The West 148.4 feet of that portion of the Northwest quarter of the Southeast quarter of Section 28, Township 22 North, Range 5 East, W.M., in King County, Washington; lying Southerly of Kent-Kangley Road, Except the North 300.00 feet thereof as measured along the West line of said subdivision;

AND ALSO

That portion of the Northeast quarter of the Southwest quarter of Section 28, Township 22 North, Range 5 East, W.M., in King County, Washington described as follows: Beginning at the Northwest corner of said subdivision, thence East a distance of 841.7 feet; thence S 28°38'00" W a distance of 407.00 feet to the True Point of Beginning; thence S 62°09'00" E a distance of 100.00 feet; thence N 28°38'00" E a distance of 120.00 feet; thence N 62°09'00" W a distance of 100.00 feet; thence S 28°38'00" W a distance of 120.00 feet to the True Point of Beginning.

AND ALSO

That portion of the Northeast quarter of the Southwest quarter of Section 28, Township 22 North, Range 5 East, W.M., in King County, Washington, described as follows: Beginning at the Northwest corner of said subdivision; thence N 89° 59'00" E along the North line of said subdivision a distance of 841.70 feet; thence S 28°38'00" W 67.51 feet to the True Point of Beginning; thence S 62° 10'47" E a distance of 105.42 feet to the Northerly extension of a curve to the right, the center of which lies N 70°26'37" E 45.00 feet; thence Northeasterly along said curve an arc distance of 108.53 feet; thence S 28°38'00" W a distance of 417.44 feet; thence N 62°09'00" W along the Northeasterly margin of State Highway a distance of 134.50 feet; thence N 28°38'00" E to the True Point of Beginning; Except the Southwesterly 120 feet of the Northwesterly 100 feet AND EXCEPT the Northeasterly 110 feet of the Northwesterly 105.42 feet.

AND ALSO

That portion of the Northeast quarter of the Southwest quarter of Section 28, Township 22 North, Range 5 East, W.M., in King County, Washington described as follows: Beginning at the Northwest corner of said subdivision, thence

N 89°59'00" E along the North line of said subdivision a distance of 841.70 feet; thence S 28°38'00" W a distance of 67.51 feet to the True Point of Beginning; thence continuing S 28°38'00" W a distance of 110 feet; thence S 62°10'47" E a distance of 105.42 feet; thence N 28°38'00" E a distance of 110 feet; thence N 62°10'47" W a distance of 105.42 feet to the True Point of Beginning.

AND ALSO

That portion of the Northeast quarter of the Southwest quarter of Section 28, Township 22 North, Range 5 East, W.M. in King County, Washington described as follows: Beginning on the North line of said subdivision; thence N 89°59'00" E a distance of 841.70 feet from the Northwest corner; said Point being the True Point of Beginning thence S 28°38'00" W a distance of 67.51 feet; thence S 62° 10'47" E a distance of 105.42 feet to the Northerly extension of a curve to the right the center of which lies N 70°26'37" E a distance of 45.00 feet; thence Northeasterly along said curve an arc distance of 108.53 feet; thence N 28°38'00" E a distance of 61.46 feet; thence S 89°59'00" W a distance of 154.30 feet along said North line to the True Point of Beginning;

AND ALSO

That portion of the Northeast quarter of the Southwest quarter of Section 28, Township 22 North, Range 5 East, W.M., in King County, Washington, described as follows: Beginning at a point which lies a distance of 996.00 feet East of the Northwest corner of said subdivision; thence East a distance of 136.5 feet thence S 28°38'00" W a distance of 541.5 feet; thence Northwesterly along State Highway a distance of 120.00 feet; thence N 28°38'00" E to the True Point of Beginning.

AND ALSO

That portion of the Northeast quarter of the Southwest quarter of Section 28, Township 22 North, Range 5 East, W.M., in King County, Washington, described as follows: Beginning at a point on the North line of said subdivision which lies a distance of 1132.8 feet East from the Northwest corner thereof, said point being the True Point of Beginning of the following described property; thence S 28°38'00" W a distance of 541.5 feet to the Northerly margin of State Highway; thence S 62°09'00" E along said Northerly margin to a point which lies a distance of 146.8 feet Northwesterly from its intersection with the westerly margin of 124th Ave. S.E., thence North a distance of 637.25 feet to a point on the North line of the Northeast quarter of the Southwest quarter a distance of 149.8 feet West from the Northeast corner thereof; thence West to the True Point of Beginning.

AND ALSO

That portion of the East 149.8 feet of the Northeast quarter of the Southwest quarter of Section 28, Township 22 North, Range 5 East, W.M., in King County, Washington lying Northerly of Kent-Kangley Road; Except the Northerly 507 feet, AND Except State Highway.

AGREEMENT FOR THE SALE OF WATER BY THE

CITY OF KENT TO KING COUNTY WATER DISTRICT #111

This Agreement made and entered into this 21st day of November 1983, by the CITY OF KENT, a municipal corporation of the State of Washington, hereinafter called "THE CITY," and KING COUNTY WATER DISTRICT NO. 111, a municipal corporation of the State of Washington, hereinafter called "THE DISTRICT."

WITNESSETH:

WHEREAS, the parties desire to enter into a contract providing for the sale of water by THE CITY to THE DISTRICT, NOW, THEREFORE, IT IS AGREED AS FOLLOWS:

(1) Term of Contract. The effective date of this AGREEMENT shall be December 1, 1983. The contract shall be for a one (1) year period.

(2) Rates. THE DISTRICT shall pay to THE CITY for all water delivered at a rate of $0.68 cents per 100 cubic feet except during the period of and including June 1 through August 31. During said period, THE DISTRICT shall pay to THE CITY for all water delivered at a rate of $1.59 cents per 100 cubic feet.

(3) Metering Equipment. THE CITY shall own and maintain an appropriate metering device to measure the water flowing from THE CITY's system to THE DISTRICT's system at every service connection point.

(4) Meter Charge. A monthly demand charge of twenty-one dollars and five cents ($21.05) for each 6-inch meter and twenty-eight dollars and five cents ($28.05) for each 8-inch meter shall be paid by THE DISTRICT.

(5) Point of Delivery. The water to be supplied by THE CITY under the provisions hereof shall be delivered to THE DISTRICT at the following four locations at whatever pressure may be available.

Meter Size	Location
6"	124th Avenue S.E. & S.E. 282nd Street
6"	124th Avenue S.E. & S.E. 277th Street
6"	256th Street S.E. & approximately 470 feet east of 124th Avenue S.E.
8"	SR 516 (Kent-Kangley) & 150th Place S.E.

(6) Priority and Continuity of Service. Continuity of service to THE DISTRICT shall be maintained by THE CITY to the extent feasible in the same manner as service to THE CITY's own residences and other consumers served directly by it. THE CITY is not obligated, however, to maintain any designated water surface level in THE DISTRICT's 150,000 gallon reservoir. Maintenance of said level shall be THE DISTRICT's sole responsibility. In the event of a general emergency or water shortage requiring restrictions on the delivery of water, THE CITY shall have the right to restrict service to THE DISTRICT. No greater restrictions, however, shall be placed upon deliveries to THE DISTRICT than are placed upon deliveries to similar classes of consumers served directly by THE CITY.

THE CITY may temporarily interrupt or reduce deliveries of water to THE DISTRICT if THE CITY determines that such interruption or reduction is

necessary or reasonable in case of system breakdowns or in order to install equipment and make repairs, replacements, investigations and inspection of, or perform other maintenance work on THE CITY's water system or those parts thereof supplying THE DISTRICT. Except in cases of emergency and in order that THE DISTRICT's operations will not be unreasonably interfered with, THE CITY shall give THE DISTRICT reasonable notice of any such interruption or reduction, the reason therefore, and the probable duration thereof.

(7) Payments. THE CITY shall read the meter or meters once each month at approximately thirty (30) day intervals. It is recognized the THE DISTRICT can make payment only upon claim processed through the County Treasurer and payment shall be made by THE DISTRICT as soon as possible after receipt of statement from THE CITY, and in any event, not later than the tenth (10th) of the second month following the presentation of the bill. In the event the meter or meters shall fail to register, or obviously register incorrectly, the amount of water delivered through said meter or meters shall be estimated on the basis of the meter readings for the same month, or months during the preceding year, when said meter or meters were properly functioning.

(8) Penalties for Late Payment. THE CITY may assess a late charge on THE DISTRICT for failure to comply with the provisions in Section (7). This charge shall be twelve percent (12%) per year or the maximum amount permissable by law. In the event that THE DISTRICT should fail to make any payment to THE CITY for a period of sixty (60) days after the same becomes due, THE CITY shall have the right to terminate further water services until such delinquency is cured.

(9) Access to Facilities and Records. Each party shall be entitled to inspect the facilities of the other at any reasonable time. Both parties agree to make mutually available such information or records as are at their disposal and as may be reasonably necessary to properly implement any section of this contract.

(10) Non-Assignability. Neither this contract nor any interest therein shall be transferred or assigned by THE DISTRICT without prior written consent of THE CITY.

(11) Water Quality. The quality of water delivered under this AGREEMENT shall be subject to applicable provisions of State and Federal law and rules and regulations of the appropriate State agency governing water quality, and subject also to applicable provisions of THE CITY ordinances relating thereto and not inconsistent herewith. THE CITY agrees to deliver water which shall be of no less quality than is delivered to its customers throughout THE CITY service area.

IN WITNESS WHEREOF the parties hereunto set their hands the day and year first above written.

KING COUNTY WATER DISTRICT NO. 111

By _____
President and Commissioner

By _____
Commissioner

By _____
Commissioner

ATTEST:

Secretary, Board of Commissioners

CITY OF KENT

By Isabel Hogan
Mayor

ATTEST:

Marie Jonson
City Clerk 1/25/84

0155B-51A

AGREEMENT FOR THE SALE OF WATER BY
KING COUNTY WATER DISTRICT NO. 111 TO THE CITY OF KENT

This Agreement made and entered into this 1st day of June, 1986, by the CITY OF KENT, a municipal corporation of the State of Washington, hereinafter called "THE CITY," and KING COUNTY WATER DISTRICT NO. 111, a municipal corporation of the State of Washington, hereinafter called "THE DISTRICT."

WITNESSETH:

WHEREAS, the parties desire to enter into a contract providing for the sale of water by THE DISTRICT to THE CITY, NOW, THEREFORE, IT IS AGREED AS FOLLOWS:

(1) Term of Contract. The effective date of this AGREEMENT shall be June 1, 1986. The contract shall be for a three (3) month period.

(2) Rates. THE CITY shall pay to THE DISTRICT for all water delivered at a rate of $1.59 cents per 100 cubic feet. The maximum water available to THE CITY shall be 700 gallons per minute (1 million gallons per day).

(3) Metering Equipment. THE CITY shall own and maintain the appropriate metering device to measure the water flowing from THE DISTRICT's system to THE CITY's system at the service connection point.

(4) Meter Charge. A monthly demand charge of twenty-one dollars and five cents ($21.05) for the 6-inch meter shall be paid by THE CITY.

(5) Point of Delivery. The water to be supplied by THE DISTRICT under the provisions hereof shall be delivered to THE CITY at the following location at whatever pressure may be available.

Meter Size	Location
6"	256th Street S.E. and approximately 470 feet east of 124th Avenue S.E.

(6) Priority and Continuity of Service. Continuity of service to THE CITY shall be maintained by THE DISTRICT to the extent feasible in the same manner as service to THE DISTRICT's own residences and other consumers served directly by it. THE DISTRICT is not obligated, however, to maintain any designated water surface level in THE CITY's reservoirs. Maintenance of said level shall be THE CITY's sole responsibility. In the event of a general emergency or water shortage requiring restrictions on the delivery of water, THE DISTRICT shall have the right to restrict service to THE CITY. No greater restrictions, however, shall be placed upon deliveries to THE CITY than are placed upon deliveries to similar classes of consumers served directly by THE DISTRICT.

THE DISTRICT may temporarily interrupt or reduce deliveries of water to THE CITY if THE DISTRICT determines that such interruption or reduction is necessary or reasonable in case of system breakdowns or in order to install equipment and make repairs, replacements, investigations and inspection of, or perform other maintenance work on THE DISTRICT's water system or those parts thereof supplying THE CITY. Except in cases of emergency and in order that THE CITY's operations will not be unreasonably interfered with, THE DISTRICT shall give THE CITY reasonable notice of any such interruption or reduction, the reason therefore, and the probable duration thereof.

(7) Payments. THE DISTRICT shall read the meter once each month at approximately thirty (30) day intervals. It is recognized the THE CITY only approves payment of bills twice monthly and payment shall be made by THE CITY as soon as possible after receipt of statement from THE DISTRICT, and in any event, not later than the tenth (10th) of the first month following the presentation of the bill. In the event the meter shall fail to register, or obviously register incorrectly, the amount of water delivered through said meter shall be estimated by the best means or practice available.

(8) Penalties for Late Payment. THE DISTRICT may assess a late charge on THE CITY for failure to comply with the provisions in Section (7). This charge shall be twelve percent (12%) per year or the maximum amount permissible by law. In the event that THE CITY should fail to make any payment to THE DISTRICT for a period of thirty (30) days after the same becomes due, THE DISTRICT shall have the right to terminate further water services until such delinquency is cured.

(9) Access to Facilities and Records. Each party shall be entitled to inspect the facilities of the other at any reasonable time. Both parties agree to make mutually available such information or records as are at their disposal and as may be reasonably necessary to properly implement any section of this contract.

(10) Non-Assignability. Neither this contract nor any interest therein shall be transferred or assigned by THE CITY without prior written consent of THE DISTRICT.

(11) Water Quality. The quality of water delivered under this AGREEMENT shall be subject to applicable provisions of State and Federal law and rules and regulations of the appropriate State agency governing water quality, and subject also to applicable provisions of THE DISTRICT ordinances relating thereto and not inconsistent herewith. THE DISTRICT agrees to deliver water which shall be of no less quality than is delivered to its customers throughout THE DISTRICT service area.

IN WITNESS WHEREOF the parties hereunto set their hands the day and year first above written.

KING COUNTY WATER DISTRICT NO. 111

By _____
President and Commissioner

By _____
Commissioner

By _____
Commissioner

ATTEST:

_____
Secretary, Board of Commissioners

CITY OF KENT

By _____
Mayor

ATTEST:

_____
City Clerk

654E-12E

AGREEMENT FOR THE CONSTRUCTION OF PUBLIC WATER SUPPLY DISTRIBUTION SYSTEM FACILITIES

THIS AGREEMENT is entered into between the City of Kent, a Washington municipal corporation, hereinafter called the "CITY" and King County Water District #111, 27224 - 144th Ave SE, Kent, Wa. 98042, hereinafter called the "DISTRICT".

RECITALS

WHEREAS, the CITY serves various water customers outside its water district boundaries from the CITY's water supply main known as the Kent Springs transmission main; and

WHEREAS, the CITY declared it's intent to terminate said transmission main customers by passage of Resolution #854, for reasons stated therein; and

WHEREAS, the DISTRICT is the water purveyor for the vicinity or region where the customers to be terminated are located; and

WHEREAS, the DISTRICT has indicated it is able and willing to provide water to said terminated customers; and

WHEREAS, the CITY has paid the DISTRICT the DISTRICT's meter hang and capital facilities charge as required to allow connection of said terminated customers to the DISTRICT's water supply system; and

WHEREAS, the CITY is planning construction of water mains, water services, fire hydrants and related appurtenances within the DISTRICT's boundaries as required to provide a replacement water supply for said terminated customers, (hereinafter, the "Improvements"); and

WHEREAS, the CITY is financially responsible for the cost of said Improvements; and

WHEREAS, the Improvements, once constructed, will become the property of and be operated by the DISTRICT; and

WHEREAS, the DISTRICT has asked the CITY to construct other improvements in addition to the CITY's Improvements (the "Additional Improvements") as an additional cost to the CITY's construction contract, which Additional Improvements are not necessary to serve the CITY's terminated customers and are solely for the benefit of the DISTRICT; and

WHEREAS, the DISTRICT is financially responsible for said Additional Improvements and is obligated to reimburse the CITY for all cost required for the construction thereof:

NOW THEREFORE, in consideration of the terms, conditions, covenants and performances contained herein, or attached and incorporated and made a part hereof, IT IS MUTUALLY AGREED AS FOLLOWS:

AGREEMENT

Section 1. General. The CITY, as agent acting for and on behalf of the DISTRICT, agrees to do the work in constructing the Additional Improvements for the DISTRICT, in accordance with and as described in the scope of work marked Exhibit "A" and plans marked Exhibit "C" attached hereto, which by this reference are made a part of this AGREEMENT.

Section 2. Construction Plans. Plans, specifications and cost estimates were prepared by the CITY generally in accordance with the current State of Washington Standard Specifications for Road, Bridge, and Municipal Construction, CITY Special Provisions, DISTRICT Standard Specifications as applicable, and adopted design standards. The DISTRICT hereby approves the scope of work and plans for the described construction as shown on Exhibits "A" and "C".

Section 3. Construction. The City is hereby designated the construction agent for the project. The CITY will incorporate said plans and specifications into the CITY's project and thereafter advertise the resulting project for competitive bid. Once the contract is awarded, the CITY will administer the contract. As construction agent, the CITY will perform all engineering, survey and field inspections and shall make all payments to the contractor. The CITY will keep the DISTRICT advised as to the progress of said project.

Section 4. Authority to Construct. The DISTRICT has reviewed the CITY's plans and specifications and hereby authorizes the CITY to construct in accordance with these plans and specifications without further approval, permit or bond for the purpose intended by this AGREEMENT.

Section 5. Inspection by District. The DISTRICT may, if it desires, furnish an inspector on the project. Any costs for such inspection will be borne solely by the DISTRICT. All contact between said inspector and the CITY's contractor shall be through the CITY's representatives.

Section 6. Payment. An itemized estimate of cost for work to be performed by the CITY for the DISTRICT marked Exhibit "B" is attached hereto, and by this reference made a part of this AGREEMENT. The DISTRICT, in consideration of the faithful performance of the work to be done by the CITY, agrees to reimburse the CITY for the actual direct cost of all work that is the financial responsibility of the DISTRICT as defined in Exhibits "A" and "B" and shall take all necessary action to pledge, budget and allocate the same. Payment shall be made by the DISTRICT to the CITY within 30 days, upon the request of the CITY, to cover actual direct costs incurred as indicated by the final pay estimate for the CITY's construction contract.

Section 7. Extra Work. In the event unforeseen causes require an increase in the DISTRICT's cost obligation of 25 percent or more from that estimated on Exhibit "B", this AGREEMENT will be modified by supplemental AGREEMENT covering said increase. In the event it is determined that any "substantial change" from the description of the work contained in the AGREEMENT is required, written approval must be secured from the DISTRICT before the beginning of such work. "Substantial change" is defined as any changes requiring an increase in the DISTRICT's financial obligation (per Exhibit "B") of greater than 25%.

Section 8. Emergency Repairs. Prior to CITY acceptance of the CITY contractor work, if there is a need for emergency repair and the CITY's contractor is unable to perform such repair in a timely manner, the DISTRICT shall have permission to enter upon the CITY's property and complete said emergency repair. Emergency repairs are defined as work performed by CITY or DISTRICT forces to stabilize, remove immediate hazards or dangers by cutting and capping water mains, and restoring immediate utility services to customers in the area. Upon completion of any emergency repairs by the CITY or the DISTRICT, the CITY and the DISTRICT shall cooperatively determine each party's financial responsibility.

Section 9. Final Acceptance. The CITY shall conduct a field review of each constructed facility with representatives of the DISTRICT, and shall further require all punchlist items to be corrected to the satisfaction of the DISTRICT and the CITY before final acceptance by the CITY. The DISTRICT agrees, upon satisfactory completion of the work involved as determined by the DISTRICT, to deliver a letter of acceptance approving the CITY's design, management and construction of the project. Acceptance shall not constitute acceptance of any unauthorized

or defective work or materials, nor be a waiver of any manufacturer's, suppliers or contractors' warranties. Final acceptance of the project shall be by the CITY after inspection by all agencies involved.

Section 10. Delivery of Completed Lines. The CITY agrees, within 30 days from the date of completion and final acceptance by the DISTRICT and the CITY of the Improvements and Additional Improvements, to deliver title to such Improvements to the DISTRICT by appropriate bill of sale and quit claim deed. The CITY will forward to the DISTRICT any guarantee or warranty furnished as a normal trade practice in connection with the purchase of any equipment, materials, or items used in the construction of the project. The CITY shall submit mylar as-built drawings (auto-cadd disks are not available) to the DISTRICT upon completion of the project for DISTRICT review and approval. Upon delivery by the CITY to the DISTRICT and DISTRICT approval as described in this section, the DISTRICT shall issue a release and waiver of all claims or demands of any nature, past or present, whether known or unknown, that result from the CITY'S performance of the work contemplated in this agreement. This release and waiver must be in a form acceptable to the City attorney. The CITY shall warrant the workmanship and materials utilized in the Improvements to be free of defects for a period of one year from the date of transfer. The CITY shall also assign to the DISTRICT such easements as may be necessary for the DISTRICT to access, maintain or replace the Improvements.

Section 11. Legal Relations. The DISTRICT shall indemnify and hold the CITY and its agents, employees, and/or officers harmless from and shall process and defend at its own expense any and all claims, demands, suits, actions, penalties, losses, damages, or costs of whatsoever

kind or nature brought against the CITY arising out of, in connection with, or incident to the execution of this AGREEMENT and/or the DISTRICT's performance or failure to perform any aspect of this AGREEMENT; Provided, however, that if such claims are caused by or result from the concurrent negligence of (a) the DISTRICT and (b) the CITY, its agents, employees and/or officers, this indemnity provision shall be valid and enforceable only to the extent of the negligence of the DISTRICT, and provided further, that nothing herein shall require the DISTRICT to indemnify, hold harmless or defend the CITY, its agents, employees and/or officers from any claims arising from the sole negligence of the CITY, its agents, employees, and/or officers. No liability shall attach to the CITY or the DISTRICT by reason of entering into this AGREEMENT except as expressly provided herein.

Section 12. Resolution of Disputes and Governing Law. Should any dispute, misunderstanding, or conflict arise as to the terms and conditions contained in this AGREEMENT, the disputed matter shall be determined solely under the jurisdiction, venue and local rules of the King County Superior Court, located in Kent, King County, Washington. This Agreement shall be governed by and construed in accordance with the laws of the State of Washington. In any claim or lawsuit for damages arising from the parties's performance of this AGREEMENT, each party shall be responsible for all its legal costs and attorney's fees incurred in defending or bringing such claims or lawsuit; provided, however, nothing in this paragraph shall be construed to limit the City's right to indemnification under Section 11 of this AGREEMENT.

Section 13. Written Notice. All communications regarding this AGREEMENT shall be

sent to the parties at the addresses listed on the signature page of this AGREEMENT, unless notified to the contrary. Any written notice hereunder shall become effective upon the date of mailing by registered or certified mail, and shall be deemed sufficiently given if sent to the addressee at the address stated in this AGREEMENT or such other address as may be hereafter specified in writing.

Section 14. Assignment. Any assignment of this AGREEMENT by either party without the written consent of the non-assigning party shall be void.

Section 15. Modification. No waiver, alteration, or modification of any of the provisions for the AGREEMENT shall be binding unless in writing and signed by a duly authorized representative of the CITY and the DISTRICT.

Section 16. Entire Agreement. The written provisions and terms of this AGREEMENT, together with any attached Exhibits, shall supersede all prior verbal statements of any officer or other representative of either party, and such statements shall not be effective or be construed as entering into or forming a part of or altering in any manner this AGREEMENT. This document, including all Exhibits, is the entire agreement between the parties. Should any language in any of the Exhibits to the AGREEMENT conflict with any language contained in this AGREEMENT, the terms of this AGREEMENT shall prevail.

Section 17. This AGREEMENT shall be effective as to all parties on the last date signed below.

(SIGNATURES ON FOLLOWING PAGE)

IN WITNESS WHEREOF, this AGREEMENT and Conveyance is executed by the Parties by their authorized officers indicated below.

CITY OF KENT

BY Christi Houser

IT'S Mayor Pro Tem

DATE 6-20-97

ATTEST:

Brenda Jacober

CITY CLERK, CITY OF KENT

APPROVED AS TO FORM:

Hiram C. Bulcher

KENT CITY ATTORNEY, ASS'T.

KING COUNTY WATER DISTRICT #111

BY Charles E Wilson

IT'S Sec of Board

DATE 5-27-97

ATTEST:

APPROVED AS TO FORM:

ATTORNEY FOR KCWD #111

EXHIBIT "A"

SCOPE OF WORK

A.) DESCRIPTION OF COMPLETE PROJECT

The project is the installation of 8" and 12" water mains for domestic service and fire protection. Services including meter boxes are also included. Approximately 4800 LF of water main, 30 services and 7 fire hydrants and related appurtenances will be installed.

1. Section 35-22-5
Water main construction with services on the following streets:

STREET	FROM	TO	SIZE
152nd Ave SE	675 ft south of SE 280th St	300 ft north of SE 280th St	8"
SE 280th St	152nd Ave SE	530 ft east of 152nd SE	8"
SE 275th St	152nd Ave SE	154th Ave SE	12"
SE 275th St	154th Ave SE	156th Ave SE	8"
156th Ave SE	SE 275th St	155th Pl SE	8"
154th Ave SE and easement	SE 275th St	south side SR516 (272nd)	12"
273rd Pl SE (easement)	154th Ave SE	380 ft west of 154th Ave SE	8"

2. Section 35-22-5

Two service installations only on 152nd Ave SE for 15229 SE 278th Place and 27730 152nd Ave SE. These will be connected to existing DISTRICT mains.

3. Section 26-22-5 and 35-22-5

Three service tie overs on the north side of SE 272nd for 15238, 15320 and 15630. These will be connected to existing DISTRICT mains. These services were installed previously and only require a tie over in the existing meter box.

Two service tie overs on the south side of SE 272nd as described above for 15323 and 15423.

B.) DESCRIPTION OF ADDITIONAL IMPROVEMENTS REQUESTED BY THE DISTRICT

The following portion of the above described work has been requested by the DISTRICT.

1. Over size the water main from 8" to 12" on SE 275th St from 152nd to 154th Ave SE and on 154th Ave SE from SE 275th St to the south side of SR516. This work is shown on Sheets 6,7,

and 10 of 10 of the project plans. Estimated cost is shown in Schedule I of Exhibit "B" of this agreement.

2. The above described improvements on 156th Ave SE to complete the loop from SE 275th St SE to the fire station as shown on sheet 9 of 10 of the plans. Estimated cost is shown in Schedule II of Exhibit "B"of this agreement.

WORK TO BE PERFORMED BY THE CITY

All work as described above in the Scope of Work and as shown on the plans in Exhibit "C" of this agreement.

WORK TO BE PERFORMED BY THE DISTRICT

No work, under the CITY's contract. Following completion of the CITY work, the DISTRICT will install water meters for the 30 services mentioned in the Scope of Work, and shall operate the finished system.

FINANCIAL RESPONSIBILITY

The CITY shall be responsible for all costs to perform the work as described above in the Scope of Work except the additional improvements requested by the DISTRICT. The DISTRICT shall be responsible for the cost to perform the additional improvements as detailed in Exhibit "B"of this agreement.

EXHIBIT 'B'

KENT SPRINGS CUSTOMER REMOVAL
WATER MAINS (152ND TO 156TH AVE)

WATER DISTRICT #111 COST ESTIMATE
REVISED 5/14/97

ITEM NO	QUANTITY	UNITS	BID ITEM	UNIT PRICE	TOTAL AMOUNT
SCHEDULE I			OVER SIZE WATER MAIN FROM 8" TO 12"		
2035	1,618	LF	DUCTILE IRON PIPE FOR WATER MAIN	8	12,944.00
2055	4	EA	GATE VALVE	250	1,000.00
			TOTAL		13,944.00
			8.6% SALES TAX		1,199.18
			OVERSIZE TOTAL		15,143.18
SCHEDULE II			156TH AVE SE, COMPLETE LOOP		
2000	1	LS	MOBILIZATION	2,150	2,150.00
2005	1	EA	8" CONNECTION TO EXISTING 8" MAIN	1,000	1,000.00
2025	655	LF	DUCTILE IRON PIPE FOR WATER MAIN 8 IN DIAM	26	17,030.00
2045	2	EA	8" GATE VALVE	500	1,000.00
2085	2	EA	6" BLOWOFF	1,750	3,500.00
2105	209	TONS	BANK RUN GRAVEL FOR TRENCH BACKFILL	8	1,672.00
2110	10	TONS	GRAVEL BACKFILL FOR FOUNDATION CLASS B	10	100.00
2115	66	TONS	CRUSHED SURFACING TOP COURSE	12	792.00
2116	133	TONS	CRUSHED SURF. BASE COURSE (ROAD CROSSING BACKFILL)	12	1,596.00
2120	15	TONS	ASHPALT CONC. CLASS B	50	750.00
2125	15	TONS	COLD PLANT MIX (TEMP. PATCH)	50	750.00
2286	40	HOURS	TRAFFIC CONTROL LABOR	24	960.00
2290	1	LS	SEEDING, FERTILIZING AND MULCHING	350	250.00
			TOTAL		31,550.00
			8.6% SALES TAX		2,713.30
			SCHEDULE II TOTAL		34,263.30
			CONSTRUCTION TOTAL		**49,406.48**
			10% CONTINGENCY		**4,940.65**
			DESIGN & CONSTRUCTION ENGINEERING (ESTIMATE)		**2,500.00**
			WD #111 TOTAL		**$56,847.13**

AGREEMENT

WATER MAIN OPERATIONS CONTRACT

THIS AGREEMENT is entered into between the CITY OF KENT (the "City") and WATER DISTRICT NO. 111 of King County (the "District"), municipal corporations under the laws of the State of Washington (the "Parties"). This Agreement is entered into in accordance with RCW 35.13A.070.

WHEREAS, the City is planning water main construction to improve the distribution of water to customers within the District's service area; and

WHEREAS, said customers have historically been provided water by the City although they are within the District's service area; and

WHEREAS, said water main construction shall also provide water availability to other properties within the District's service area which said properties represent future customers; and

WHEREAS, certain current Kent customers may in the future request additional service in the form of additional meters or an increase in meter size above the originally installed residential 5/8" x 3/4" meter in which case these properties will also be considered a future customer; and

WHEREAS, the City will pay the costs of improvements within the District's service area, with the expectation that it will regain a portion of such contributions through charges-in-lieu-of-assessment charged to future customers; and

WHEREAS, the Parties desire to provide a method of fairly apportioning the costs of said improvements within the District's service area; and

WHEREAS, it is advantageous to the Parties for the District to assume responsibility for providing service to the customers within its service area, and to assume responsibility for the operation and maintenance of the distribution mains providing water to such customers.

NOW, THEREFORE, in consideration of the mutual promises set for the below, the Parties agree as follows:

1. Upon completion of the water main construction as described in Attachment C (incorporated herein by reference) (together the "Transferred Mains") the Transferred Mains will be owned, operated and maintained by the District.

2. From the point in time stated in paragraph No. 1, the District shall own, manage, operate and maintain the Transferred Mains together with service connections and appurtenances up to the property lines of the following customers: (1) customers in the District's service area who are presently served by the City (the customers within the legal description of Attachment A and shown on Map A, both the Attachment and the Map being incorporated herein by reference) (the "Transferred Customers"); and (2) customers who in the future, connect to the Transferred Mains. The District shall operate and maintain the Transferred Mains in accordance with high engineering standards in accordance with generally accepted practices in effect at the time these services are performed and in conformity with applicable standards and requirements of state and federal agencies having jurisdiction over such maintenance and operation.

3. The Transferred Customers shall receive water service from the District and shall pay the District its customary service charges.

4. The District shall connect and serve customers within the area described at Attachment B and Map B (incorporated herein by this reference) (the "Future Customers"), whenever such customers seek service and have complied with the District's standard requirements for service. The District shall charge each Future Customer a charge-in-lieu-of-assessment in such amounts as are determined by the City at the completion of the construction based on final project costs, and the District shall cooperate with the City to effect the efficient collection of such charges. The District shall collect such charges, interest and penalties at its own expense, and shall promptly transmit such collected charges (and interest and penalties) to the City.

5. The Transferred Mains shall become the property of the District. The City agrees, within 30 days from the date of completion and final acceptance by the District and the City of the improvements, to deliver title to the Transferred Mains to the District by appropriate bill of sale and quit claim deed. The City will forward to the District any guarantee or warranty furnished as a normal trade practice in connection with the purchase of any equipment, materials, or items used in the construction of the project. The City shall submit mylar as-built drawings (AUTO-

CADD disks are not available) to the District upon completion of the project for District review and approval. Upon delivery by the City to the District and District approval as described in this section, the District shall issue a release and waiver of all claims or demands of any nature, past or present, whether known or unknown, that result from the City's performance of the work contemplated in this agreement. This release and waiver must be in a form acceptable to the City attorney. The City shall warrant the workmanship and materials utilized in the improvements to be free of defects for a period of one year from the date of transfer. The City shall also assign to the District such easements as may be necessary for the District to access, maintain or replace the Transferred Mains.

6. The cost of any improvements to or in connection with the Transferred Mains, above and beyond the construction of the Transferred Mains, shall be borne by the District. By way of example, such additional improvements include, but are not limited to, additional fire hydrants, additional lengths of mains, or oversizing of mains.

7. The City shall obtain such permits from other government agencies as are necessary for the construction of the Transferred Mains, and shall provide copies to the District. When the District assumes the management, maintenance and operation of the Transferred Mains, the District shall take whatever actions are necessary to assume all responsibilities and costs under these permits, and shall act in accordance with the requirements of such permits.

8. The District agrees to indemnify and hold harmless the City, its officials, officers, agents and employees from any and all liability, loss or damage, including costs of legal defense, that the City may suffer as a result of claims, demands, actions, or damages to any and all persons or property against the City which result from, arise out of, or are in any way connected with the District's management, maintenance, operation, charges, fees or billing practices relating to the Transferred Mains.

9. The rights and duties of either Party under this Contract may not be assigned without first obtaining the written consent of the other party.

10. At all reasonable times, each of the Parties shall have access to and the right to examine and copy such records of the other as may be needed for the purpose of auditing compliance with this Contract.

11. Should any dispute, misunderstanding, or conflict arise as to the terms and conditions contained in this Agreement, the disputed matter shall be determined solely under the jurisdiction venue and local rules of King County Superior Court, located at Kent, King County, Washington.

    This Agreement shall be governed by and construed in accordance with the laws of the State of Washington. In any claim or lawsuit for damages arising from the parties' performance of this Agreement, the prevailing party shall be entitled to compensation for all legal costs and attorney's fees incurred in defending or bringing such claim or lawsuit, in addition to any other recovery or award provided by law; provided, however, nothing in this paragraph shall be construed to limit the City's right to indemnification under Section 8 of this agreement.

12. The Contract is binding on the Parties, their successors and assigns, and shall remain in effect until all charges-in-lieu-of-assessment levied on customers for connection to the Transferred Mains (together with interest and penalties) have been paid to the City, or until such time as it is mutually terminated by the parties or for a term of 30 years from the effective date of this agreement.

13. All communications regarding this Agreement shall be sent to the parties at the addresses listed on the signature page of the agreement, unless notified to the contrary. Any written notice hereunder shall become effective upon the date of mailing by registered or certified mail, and shall be deemed sufficiently given if sent to the addressee at the address stated in this Agreement or such other address as may be hereafter specified in writing.

14. No waiver, alteration, or modification of any of the provisions of this Agreement shall be binding unless in writing and signed by a duly authorized representative of the Parties.

15. It is agreed by the Parties that if any clause, term or provision of this Contract is held to be illegal, the validity of the remaining clause, term or provision shall not be affected, and the rights

and obligations of the Parties shall be construed and enforced as if the Contract did not contain the particular provision held to be invalid.

16. The written provisions and terms of this Agreement, together with any attached Exhibits, shall supersede all prior verbal statements of any officer or other representative of either party, and such statements shall not be effective or be construed as entering into or forming a part of or altering in any manner this Agreement. This document, including Exhibits, is the entire agreement between the parties. Should any language in any of the Exhibits to this Agreement conflict with any language contained in this Agreement, the terms of this Agreement shall prevail.

17. This Conveyance and Agreement is effective the day and year last shown below.

(Signatures on following page)

IN WITNESS WHEREOF, this Agreement and Conveyance is executed by the Parties by their authorized officers indicated below.

WATER DISTRICT NO.111

By: _____
Commissioner
Date 6-30-97

By: _____
Commissioner
Date 6-30-97

By: _____
Commissioner
Date 6-30-97

CITY OF KENT

By: _____
Jim White, Mayor
Date 8-12-97

APPROVED AS TO FORM:

By: _____
FOR Roger Lubovich, City Attorney

ATTEST:

By: _____
Brenda Jacober, City Clerk

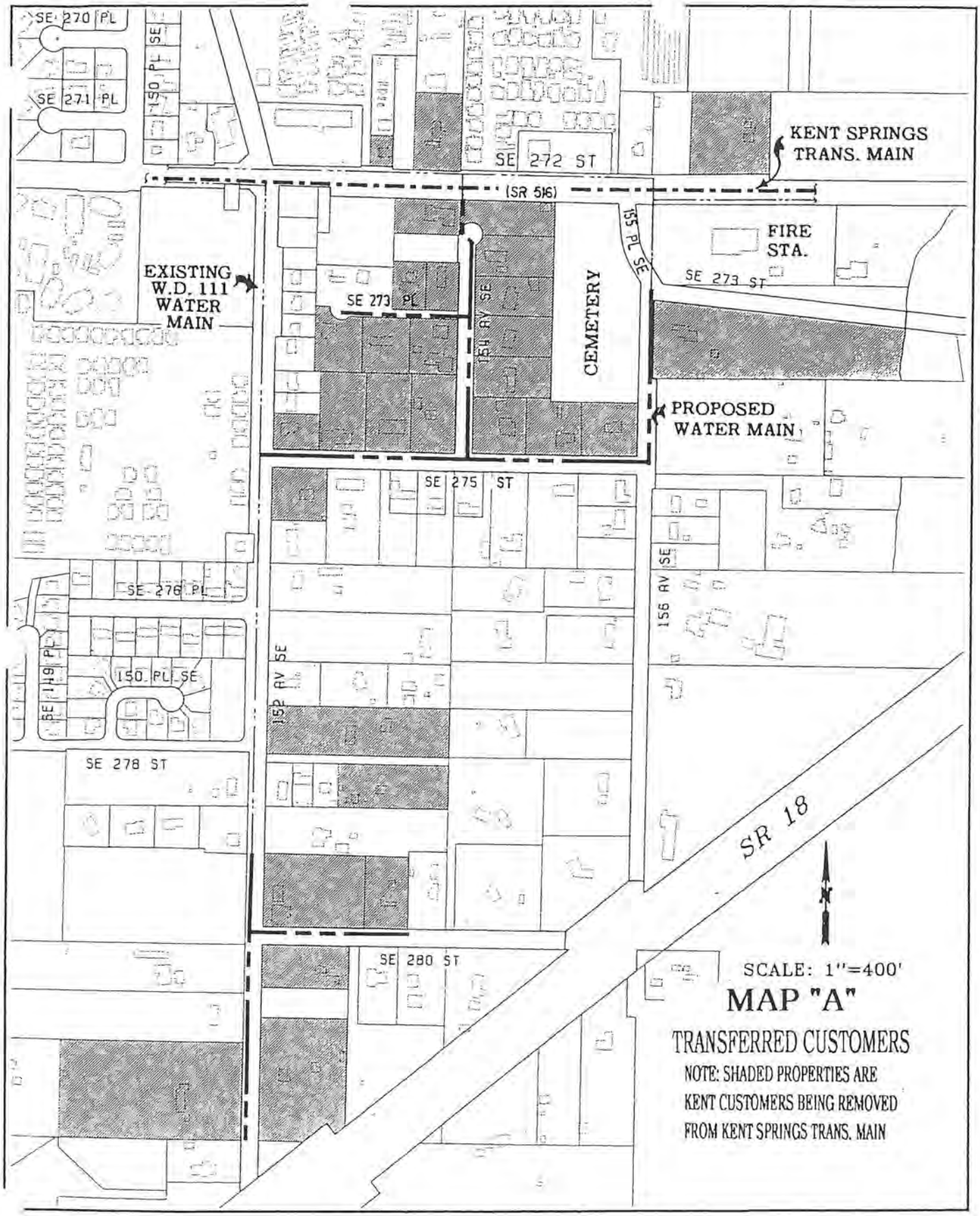

KENT SPRINGS CUSTOMER REMOVAL
WATER MAINS – 152ND TO 156TH AVE SE

ATTACHMENT A
TRANSFERRED CUSTOMERS

Lot 1 Edwall Rask Addition, Vol. 53, Page 11, EXCEPT north 144 feet thereof AND Lots 2 thru 12 in said plat AND ALSO

Portion of Section 35 Township 22 North Range 5 East, Tax Lot #9059 South half of northeast quarter of northwest quarter of southwest quarter less county road, AND ALSO

Portion of Section 35 Township 22 North Range 5 East, Tax Lot #9011 Lot 4 King County Short Plat 678016 Recording No. 8005060585 said plat described as follows: Portion of northwest quarter of northeast quarter of southwest quarter northwesterly of primary state highway less beginning at northwest corner said subdivision; then east parallel with north line said subdivision 322.7 feet; thence south 00°16'09" west 244 feet; then west 324 feet; then north along west line 244 feet to True Point of Beginning less county road. AND ALSO

Portion of Section 35, Township 22 North Range 5 East, Tax Lot #9089 Portion north half of northeast quarter of southwest quarter beginning at northwest corner said subdivision; then east parallel with north line said subdivision 322.7 feet; then south 00°16' 09" west 144 feet; thence north along west line 144 feet to True Point of Beginning less county road, AND ALSO

Portion of Section 35 Township 22 North Range 5 East, Tax Lot #9154 south half of southwest quarter of southeast quarter of northwest quarter less east 282 feet less that portion west of a line parallel to east line of southeast quarter of northwest quarter a distant 1270 feet less county road less portion thereof lying within the following - commencing at southwest corner of said southeast quarter of northwest quarter thence north 00°50'28" east along west line thereof 326.60 feet to northwest corner of south half of south half of said southeast quarter of northwest quarter thence south 89°05'20" east along north line thereof 30 feet to east margin of 152nd Avenue Southeast and True Point of Beginning; thence continuing south 89°05'20" east 496.37 feet to west line of east 132 feet of southwest quarter of said southeast quarter of northwest quarter. thence south 00°47'51" west along said west line 18.12 feet to easterly extension of old existing fence, thence north 88°37'06" west along said easterly extension and along said fence line 496.41 feet to east margin of 152nd Avenue Southeast, thence north 00°50'28" east 14.04 feet to True Point of Beginning - per King County Superior Court Order No. 91-2-01838-3 AND ALSO

Portion of Section 35 Township 22 North Range 5 East, Tax Lot #9036 Lot 4 of King County Short Plat 377165 recorded under Auditor File #7710120615 said plat described as follows: north half of southwest quarter of southeast quarter of northwest quarter less south 145 feet less county road together with undivided interest in Tract X, AND ALSO

Portion of Section 35 Township 22 North Range 5 East, Tax Lot #9100 south half of south half of northwest quarter of southeast quarter of northwest quarter less county road, AND ALSO

Portion of Section 35 Township 22 North Range 5 East, Tax Lot #9144 North 180 feet of west 218 feet of south half of south half of northeast quarter of northwest quarter less county road, AND ALSO

Portion of Section 35 Township 22 North Range 5 East Tax Lot #9134 North 170 feet of east 230 feet of northwest quarter of northeast quarter of northwest quarter less county road. AND ALSO

Portion of Section 35 Town...p 22 North Range 5 East, Tax Lot #90.. East 230 feet of South 260 feet of north 430 feet of northwest quarter of northeast quarter of northwest quarter less north 95 feet less west 115 feet thereof, AND ALSO

Portion of Section 35 Township 22 North Range 5 East Tax Lot #9162 Property account 39945241 Mobile Home west 115 feet of east 230 feet of south 260 feet of north 430 feet of northwest quarter of northeast quarter of northwest quarter less north 95 feet thereof, AND ALSO

Portion of Section 35 Township 22 North Range 5 east Tax Lot #9088 Portion of northwest quarter of northeast quarter of northwest quarter beginning at north quarter corner of section thence west 656.68 feet; then south 00°48'44" west 460 feet; thence west 328.09 feet to the True Point of Beginning; thence west 47.57 feet to point on curve to right, radius of center which bears north 39°56'12" west 40 feet; thence westerly and northerly along curve 91.76 feet; thence west 50 feet; thence south 00°50'52" west 223.80 feet; thence south 88°39'00" east 164.13 feet; thence north 00°50'10" east 193.38 feet to True Point of Beginning, AND ALSO

Portion of Section 35 Township 22 North Range 5 East, Tax Lot #9092 beginning at northeast corner of northeast quarter of northwest quarter; thence west 656.68 feet; thence south 00°48'44" west 460 feet; thence north 88°31'37" west 164.05 feet to True Point of Beginning; thence north 88°31'37" west 164.04 feet; thence south 00°50'10" west 193.38 feet; thence south 88°39'00" east 164.13 feet; thence north 00°49'27" east 192.95 feet to True Point of Beginning, AND ALSO

Portion of Section 35 Township 22 North Range 5 East, Tax Lot #9091 Beginning at northeast corner of northeast quarter of northwest quarter; thence north 88°31'37" west 656.68 feet; thence south 00°48'44" west 460 feet to True Point of Beginning; thence north 88°39'00" west 164.05 feet; thence south 00°49'27" west 192.96 feet; thence south 88°39'00" east 164.14 feet; thence north 00°48'44" east 192.54 feet to True Point of Beginning, AND ALSO

Portion of Section 35 Township 22 North Range 5 East, Tax Lot #9029 Portion of south half of north half of northwest quarter of northeast quarter lying westerly of centerline of Soos Creek and southerly of county road #503 less county road and less coal and mineral rights, AND ALSO

Portion of Section 26 Township 22 North Range 5 East, Tax Lot #9080 portion of south half of south half of southwest quarter of southeast quarter of Section 26 Township 22 North Range 5 East, described as follows: Beginning at a point on south line of said subdivision 131.45 feet east of southwest corner thereof; thence east along south line of said subdivision 272.5 feet; thence northerly to a point on the north line of said subdivision 399.95 feet east of the northwest corner of said subdivision; thence west along the north line 268.5 feet; thence south to point of beginning less portion thereof for SE 272nd Street lying southerly of line parallel to an 50 feet northerly of SR 516 survey line, AND ALSO

Portion of Section 26 Township 22 North Range 5 East, Tax Lot #9063 South 263 feet lying north of Kent-Kangley Road of east half of east half of west half of southeast quarter of southwest quarter, AND ALSO

Portion of Section 26 Township 22 North Range 5 East, Tax Lot #9070 south 160.00 feet of east 80.00 feet of west 92.00 feet of west half of east half of west half of southeast quarter of southwest quarter of Section 26 Township 22 North Range 5 East, less portion thereof lying southerly of line parallel with and 55 feet northerly of SR 516 survey line (132nd Ave SE to 160th Ave SE), AND ALSO

Portion of Section 35 Town. . .p 22 North Range 5 East, Tax Lot #904 , . roperty Account 39945209 Mobile Home west 150 feet of east 282 feet of south one half of southwest quarter of southeast quarter of northwest quarter less county road and east 17.24 feet of west 47.24 feet of south half of southwest quarter of southeast quarter of northwest quarter less county road less portion thereof defined as follows - commencing at southwest corner of said southeast quarter of northwest quarter thence north 00°50'28" east along west line thereof 326.60 feet to northwest corner of south half of south half of said southeast quarter of northwest quarter thence south 89°05'20" east along north line thereof 30 feet to east margin of 152nd avenue southeast and True Point of Beginning thence continuing south 89°05'20" east 496.37 feet to west line of east 132 feet of southwest quarter of said southeast quarter of northwest quarter thence south 00°47'51" west along said west line 18.12 feet to easterly extension of old existing fence thence north 88°37'06" west along said easterly extension and along said fence to a point on the east right-of-way margin of 152nd Avenue SE; Thence north along said road margin 14.04 feet to point of beginning.

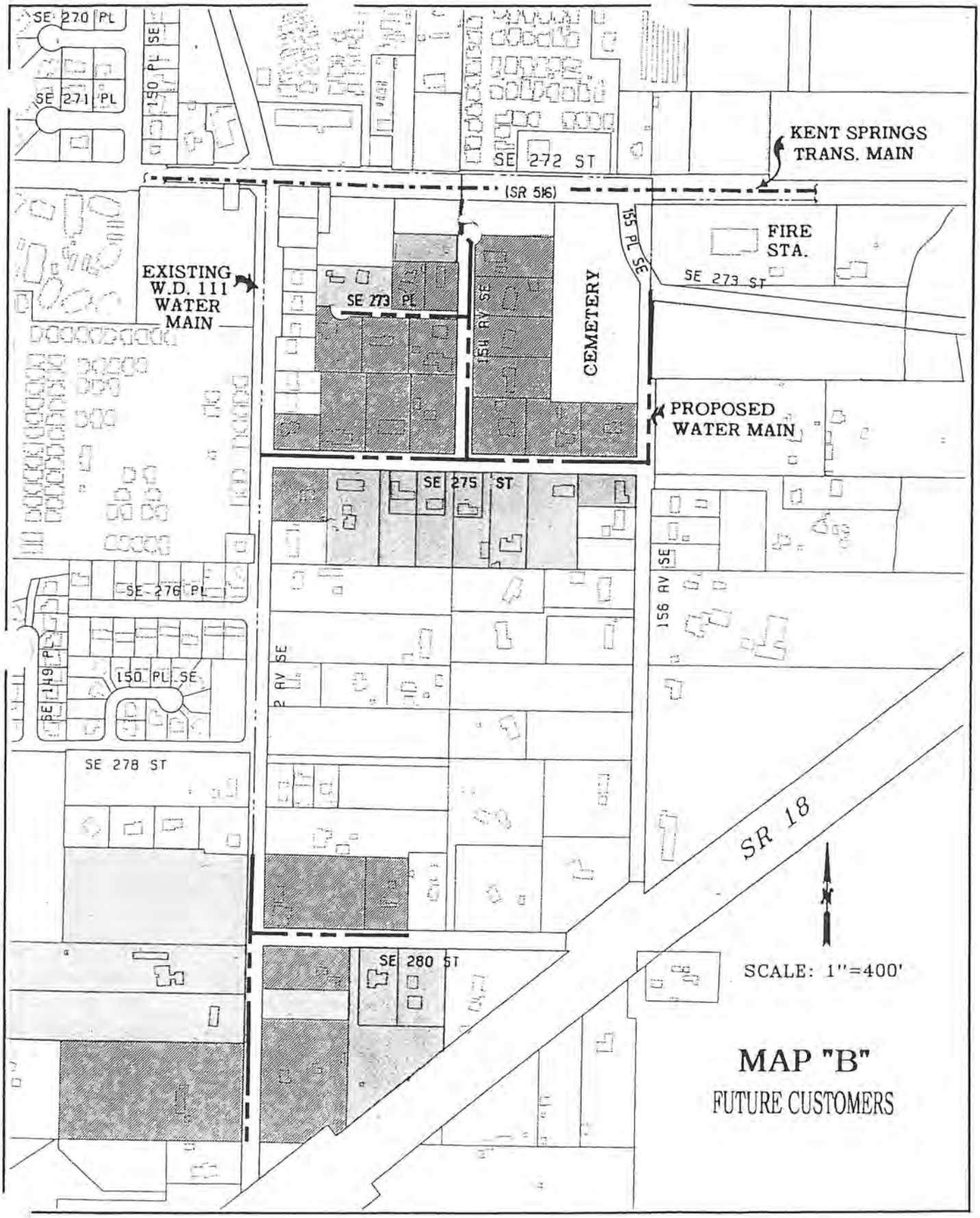

KENT SPRINGS CUSTOMER REMOVAL
WATER MAINS – 152ND TO 156TH AVE SE

ATTACHMENT B
FUTURE CUSTOMERS

Lot 1 Edwall Rask Addition, Vol. 53, Page 11, EXCEPT north 144 feet thereof AND Lots 2 thru 4 and 6 thru 12 in said plat AND ALSO

Portion of Section 35 Township 22 North Range 5 East, Tax Lot #9059 South half of northeast quarter of northwest quarter of southwest quarter less county road, AND ALSO

Portion of Section 35 Township 22 North Range 5 East, Tax Lot #9011 Lot 4 King County Short Plat 678016 Recording No. 8005060585 said plat described as follows: Portion of northwest quarter of northeast quarter of southwest quarter northwesterly of primary state highway less beginning at northwest corner said subdivision; then east parallel with north line said subdivision 322.7 feet; thence south 00°16'09" west 244 feet; then west 324 feet; then north along west line 244 feet to True Point of Beginning less county road, AND ALSO

Portion of Section 35, Township 22 North Range 5 East, Tax Lot #9089 Portion north half of northeast quarter of southwest quarter beginning at northwest corner said subdivision; then east parallel with north line said subdivision 322.7 feet; then south 00°16' 09" west 144 feet; thence north along west line 144 feet to True Point of Beginning less county road, AND ALSO

Portion of Section 35 Township 22 North Range 5 East, Tax Lot #9154 south half of southwest quarter of southeast quarter of northwest quarter less east 282 feet less that portion west of a line parallel to east line of southeast quarter of northwest quarter a distant 1270 feet less county road less portion thereof lying within the following - commencing at southwest corner of said southeast quarter of northwest quarter thence north 00°50'28" east along west line thereof 326.60 feet to northwest corner of south half of south half of said southeast quarter of northwest quarter thence south 89°05'20" east along north line thereof 30 feet to east margin of 152nd Avenue Southeast and True Point of Beginning; thence continuing south 89°05'20" east 496.37 feet to west line of east 132 feet of southwest quarter of said southeast quarter of northwest quarter, thence south 00°47'51" west along said west line 18.12 feet to easterly extension of old existing fence, thence north 88°37'06" west along said easterly extension and along said fence line 496.41 feet to east margin of 152nd Avenue Southeast, thence north 00°50'28" east 14.04 feet to True Point of Beginning - per King County Superior Court Order No. 91-2-01838-3 AND ALSO

Portion of Section 35 Township 22 North Range 5 East, Tax Lot #9144 North 180 feet of west 218 feet of south half of south half of northeast quarter of northwest quarter less county road, AND ALSO

Portion of Section 35 Township 22 North Range 5 East Tax Lot 9162 Property Account 39945241 Mobile Home West 115 feet of east 230 feet of south 260 feet of north 430 feet of northwest quarter of northeast quarter of northwest quarter less north 95 feet thereof, AND ALSO

Portion of Section 35 Township 22 North Range 5 east Tax Lot #9088 Portion of northwest quarter of northeast quarter of northwest quarter beginning at north quarter corner of section thence west 656.68 feet; then south 00°48'44" west 460 feet; thence west 328.09 feet to the True Point of Beginning; thence west 47.57 feet to point on curve to right, radius of center which bears north 39°56'12" west 40 feet; thence westerly and northerly along curve 91.76 feet; thence west 50 feet; thence south 00°50'52" west 223.80 feet; thence south 88°39'00" east 164.13 feet; thence north 00°50'10" east 193.38 feet to True Point of Beginning, AND ALSO

Portion of Section 35 Tow...ip 22 North Range 5 East, Tax Lot #9...2 beginning at northeast corner of northeast quarter of northwest quarter; thence west 656.68 feet; thence south 00°48'44" west 460 feet; thence north 88°31'37" west 164.05 feet to True Point of Beginning; thence north 88°31'37" west 164.04 feet; thence south 00°50'10" west 193.38 feet; thence south 88°39'00" east 164.13 feet; thence north 00°49'27" east 192.95 feet to True Point of Beginning, AND ALSO

Portion of Section 35 Township 22 North Range 5 East, Tax Lot #9091 Beginning at northeast corner of northeast quarter of northwest quarter; thence north 88°31'37" west 656.68 feet; thence south 00°48'44" west 460 feet to True Point of Beginning; thence north 88°39'00" west 164.05 feet; thence south 00°49'27" west 192.96 feet; thence south 88°39'00" east 164.14 feet; thence north 00°48'44" east 192.54 feet to True Point of Beginning, AND ALSO

Portion of Section 35 Township 22 North Range 5 East, Tax Lot #9047 Property Account 39945209 Mobile Home west 150 feet of east 282 feet of south one half of southwest quarter of southeast quarter of northwest quarter less county road and east 17.24 feet of west 47.24 feet of south half of southwest quarter of southeast quarter of northwest quarter less county road less portion thereof defined as follows - commencing at southwest corner of said southeast quarter of northwest quarter thence north 00°50'28" east along west line thereof 326.60 feet to northwest corner of south half of south half of said southeast quarter of northwest quarter thence south 89°05'20" east along north line thereof 30 feet to east margin of 152nd avenue southeast and True Point of Beginning thence continuing south 89°05'20" east 496.37 feet to west line of east 132 feet of southwest quarter of said southeast quarter of northwest quarter thence south 00°47'51" west along said west line 18.12 feet to easterly extension of old existing fence thence north 88°37'06" west along said easterly extension and along said fence to a point on the east right-of-way margin of 152nd Avenue SE: Thence north along said road margin 14.04 feet to point of beginning AND ALSO

Portion of Section 35 Township 22 North Range 5 East, Tax Lot #9057 East 230 feet of South 260 feet of north 430 feet of northwest quarter of northeast quarter of northwest quarter less north 95 feet less west 115 feet thereof, AND ALSO

Portion of Section 35 Township 22 North Range 5 East, Tax Lot #9006 West 400 feet of South quarter of northeast quarter of northwest quarter less west 218 feet AND ALSO

Portion of Section 35 Township 22 North Range 5 East, Tax Lot #9028 South half of southeast quarter of southwest quarter of northwest quarter less county road and less portion thereof lying within following - Beginning at the southeast corner of said southwest quarter thence north along east line thereof 330 feet thence north 89°10'49" west 30 feet to a true point of beginning thence continuing north 89°10'49" west 150 feet thence south 00°49'11" west 15.57 feet thence south 88°38'05" east 150.01 feet thence north 00°49'11" east 17 feet to the true point of beginning AND ALSO

Portion of Section 35 Township 22 North Range 5 East , Tax Lot #9056 Personal Property Account 39945225 Mobile Home northwest quarter of northeast quarter of northwest quarter less west 165 feet less portion south of line beginning 460 feet south of northeast corner thence north 88°31'37" west 375.66 feet to point on the curve to the right radial center of which bears north 39°56'12" west 40 feet thence westerly ad northerly along curve 91.76 feet thence west 50 feet less east 230 feet of north 430 feet less north 285 feet thereof AND ALSO

Portion of Section 35 Township 22 North Range 5 East , Tax Lot #9073 north half of north half of north half of northwest quarter of southwest quarter less county road AND ALSO

Portion of Section 35 Towns...p 22 North Range 5 East , Tax Lot #908c south half of north half of north half of northwest quarter of southwest quarter AND ALSO

Portion of Section 35 Township 22 North Range 5 East , Tax Lot #9117 east 126 feet of west 912 feet of south half of south half of northeast quarter of northwest quarter less county road AND ALSO

Portion of Section 35 Township 22 North Range 5 East , Tax Lot #9129 north 110 feet of east 230 feet of south half of south half of northeast quarter of northwest quarter less county road AND ALSO

Portion of Section 35 Township 22 North Range 5 East , Tax Lot #9135 south half of south half of northeast quarter of northwest quarter less west 912 feet less east 230 feet AND ALSO

Portion of Section 35 Township 22 North Range 5 East , Tax Lot #9147 north 95 feet of east 230 feet of south 260 feet of north 430 feet of northwest quarter of northeast quarter of northwest quarter less east 3 feet for county road AND ALSO

Portion of Section 35 Township 22 North Range 5 East , Tax Lot #9152 west 128.66 feet of east 386 feet of west 786 feet of south quarter of northeast quarter of northwest quarter less east 95 feet of north 145 feet AND ALSO

Portion of Section 35 Township 22 North Range 5 East , Tax Lot #9153 east 95 feet of north 145 feet of west 128.66 feet of east 386 feet of west 786 feet of south quarter of northeast quarter of northwest quarter AND ALSO

Portion of Section 35 Township 22 North Range 5 East , Tax Lot #9155 west 128.67 feet of east 257.34 feet of west 786 feet of south quarter of northeast quarter of northwest quarter less west 100 feet of north 145 feet AND ALSO

Portion of Section 35 Township 22 North Range 5 East , Tax Lot #9156 west 100 feet of north 150 feet of east 128.67 feet of west 786 feet of south quarter of northeast quarter of northwest quarter AND ALSO

Portion of Section 35 Township 22 North Range 5 East , Tax Lot #9157 west 100 feet of north 145 feet of west 128.67 feet of east 257.34 feet of west 786 feet of south quarter of northeast quarter of northwest quarter AND ALSO

Portion of Section 35 Township 22 North Range 5 East , Tax Lot #9159 east 128.67 feet of west 786 feet of south quarter of northeast quarter of northwest quarter less west 100 feet of north 150 feet AND ALSO

Portion of Section 35 Township 22 North Range 5 East , Tax Lot #9160 portion of north half of northeast quarter of southwest quarter beginning at a point 144 feet south of northwest corner of said subdivision thence east parallel with north line of said subdivision 324 feet; thence south 100 feet; thence west 324 feet thence north along west line of said subdivision 100 feet to beginning less county road AND ALSO

Portion of Section 35 Township 22 North Range 5 East , Tax Lot #9193 Lot 1 King County Short Plat 678016 Recording Number 8005060585 said plat defined as follows - Portion of northwest quarter of northeast quarter of southwest quarter northwesterly of Prim Street Highway less beginning at northwest corner of said subdivision thence east parallel with north line of said subdivision 322.7 feet thence south 00°16'09" west 244 feet thence west 324 feet thence north along west line 244 feet to the true point of beginning less county road.

Portion of Section 35 Township 22 North Range 5 East , Tax Lot #9194 Lot 2 King County Short Plat 678016 Recording Number 8005060585 said plat defined as follows - Portion of northwest quarter of northeast quarter of southwest quarter northwesterly of Prim Street Highway less beginning at northwest corner of said subdivision thence east parallel with north line of said subdivision 322.7 feet thence south 00°16'09" west 244 feet thence west 324 feet thence north along west line 244 feet to the true point of beginning less county road.

Portion of Section 35 Township 22 North Range 5 East , Tax Lot #9195 Lot 3 King County Short Plat 678016 Recording Number 8005060585 said plat defined as follows - Portion of northwest quarter of northeast quarter of southwest quarter northwesterly of Prim Street Highway less beginning at northwest corner of said subdivision thence east parallel with north line of said subdivision 322.7 ft thence south 00°16'09" west 224 feet thence west 324 feet thence north along west line 244 feet to the true point of beginning less county road.

ATTACHMENT "C"
DESCRIPTION OF TRANSFERRED MAINS

The project is the installation of 8" and 12" water mains for domestic service and fire protection. Services including meter boxes are also included. Approximately 4800 LF of water main, 30 services and 7 fire hydrants and related appurtenances will be installed.

1. Section 35-22-5
Water main construction with services on the following streets:

STREET	FROM	TO	SIZE
152nd Ave SE	675 ft south of SE 280th St	300 ft north of SE 280th St	8"
SE 280th St	152nd Ave SE	530 ft east of 152nd SE	8"
SE 275th St	152nd Ave SE	154th Ave SE	12"
SE 275th St	154th Ave SE	156th Ave SE	8"
156th Ave SE	SE 275th St	155th Pl SE	8"
154th Ave SE and easement	SE 275th St	south side SR516 (272nd)	12"
273rd Pl SE (easement)	154th Ave SE	380 ft west of 154th Ave SE	8"

2. Section 35-22-5

Two service installations only on 152nd Ave SE for 15229 SE 278th Place and 27730 152nd Ave SE. These will be connected to existing DISTRICT mains.

3. Section 26-22-5 and 35-22-5

Three service tie overs on the north side of SE 272nd for 15238, 15320 and 15630. These will be connected to existing DISTRICT mains. These services were installed previously and only require a tie over in the existing meter box.

Two service tie overs on the south side of SE 272nd as described above for 15323 and 15423.

The following portion of the above described work has been requested by and will be funded by the DISTRICT in accordance with a separate agreeement. Charge in lieu of assessments will not be charged by the CITY for this work.

1. Over size the water main from 8" to 12" on SE 275th St from 152nd to 154th Ave SE and on 154th Ave SE from SE 275th St to the south side of SR516. .
2. The above described improvements on 156th Ave SE to complete the loop from SE 275th St SE to the fire station.

CITY OF KENT

INVICTA

Jim White, Mayor

Public Works Engineering Department
Don E. Wickstrom, P.E., Director of Public Works

Telephone (253) 859-3383
Facsimile (253) 859-3559

March 12, 1999

Larry Bradbury
General Manager
Water District #111
27224 144th Avenue SE
Kent, WA 98042

RE: Kent Springs Customer Removal Water Mains (152nd to 156th Avenue SE)

Dear Larry:

Thank you for completing the documents required by the transfer agreement. A copy signed by the City is enclosed for your file.

The transfer is now complete.

Should you have any questions, please call me at 253-859-3384. My fax number is 253-859-3559.

Very truly yours,

Merrill Vesper

Merrill Vesper
Senior Design Engineer

Sk99mv001.doc

LETTER OF ACCEPTANCE

WHEREAS, on June 20, 1997, the City of Kent entered into an agreement with Water District No. 111 to construct new water mains for Water District No. 111; and

WHEREAS, pursuant to Section 9 of the Water Main Transfer Agreement, the City has conducted a field review of each constructed facility with representatives of the District, has required all punch list items to be corrected to the satisfaction of the District, and the District has reviewed the completion of the work and approves the City's design, management and construction of the project as satisfactory; NOW, THEREFORE,

The undersigned parties do hereby agree as follows:

1. The District accepts and approves the City's design, management, and construction of the water mains pursuant to the Water Main Transfer Agreement dated June 20,1997; and

2. The installation of the water main and its appurtenances have been installed in accordance with Water District No. 111's standard specifications and are hereby approved for maintenance and operation.

DATED this 12TH day of FEB., ~~1998~~ 1999.

WATER DISTRICT NO. 111	CITY OF KENT
By: Mike Harris Mike Harris, Field Superintendent	By: _____ Don Wickstrom, Public Works Director

P:\LAW\FILES\0177\acceptance.doc

RELEASE OF ALL CLAIMS

For and in consideration of the delivery and transfer of the water mains constructed pursuant to the "Water Main Transfer Agreement" dated June 20, 1997 between the City of Kent and Water District No. 1111, Water District No. 111 does hereby release and forever discharge the City of Kent, their agents, employees, officers, and assigns, from all claims, demands, damages, or death, resulting from or arising out of the City's construction of water mains pursuant to its Water Main Transfer Agreement dated June 20, 1997 with Water District No. 111.

IT IS UNDERSTOOD THAT THIS IS A FULL AND FINAL RELEASE, of any and all claims of every nature and kind, known or unknown, suspected or unsuspected involving the parties named above. It is further agreed that this is not an admission of liability on the part of the undersigned parties, but rather a release, the express purpose of which is to preclude any claims and avoid the uncertainties of litigation.

THIS RELEASE is being executed after consultation with Attorney GERALD M. ORMISTON. Each of the undersigned states that this release has been carefully read and is signed as that person's free act and deed.

CAUTION: PLEASE READ BEFORE SIGNING!

WATER DISTRICT NO. 111

By: Larry E. Bradbury
Print Name: LARRY E. BRADBURY
Title: DIST MGR
Date: 2-17-99

STATE OF WASHINGTON)
) §
County of King)

I certify that I know or have satisfactory evidence that LARRY E. BRADBURY is the person who appeared before me, and said person acknowledged that he/she signed this instrument, on oath stated that he/she was authorized to execute the instrument, and acknowledged it as the DISTRICT MGR of KING CTY WATER DIST #111 to be the free and voluntary act of such agency for the uses and purposes mentioned in the instrument.

WITNESSETH my hand and seal this 17 day of February, ~~1998~~ 1999.

Gerald M. Ormiston
GERALD M. ORMISTON
NOTARY PUBLIC in and for the State of Washington,
residing at MERCER IS.
My commission expires 6/27/99.

P:\LAW\FILES\0177\release.doc

Post-it® Fax Note 7671 | Date 3/4/02 | # of pages ▶ 21
To Larry Bradbury | From Gary Gill
Co./Dept. KC WD 111 | Co.
Phone # | Phone # 253-856-5580
Fax # 253-631-8072 | Fax #

Tom Drubaker

4.21.

ORDINANCE NO. 3447

AN ORDINANCE of the City Council of the City of Kent, Washington, granting unto King County Water District No. 111, its successors and assigns, the right, privilege, authority, and franchise for twenty-five years, to lay, construct, extend, repair, renew and replace water pipes, mains, and facilities under, along, and/or across certain designated streets, avenues, roads, alleys, rights-of-way and other public places of the City, all in order to operate a domestic water supply system for the purpose of public sale and distribution of water to customers within the City.

WHEREAS, both the City and the District are public agencies authorized by law to engage in furnishing domestic water service, and to that end, the City may, through the City Council, grant franchises with respect to the rights, powers, duties, and obligations of the parties regarding the use of public rights-of-way and other public property, the provision of services, the maintenance and operation of facilities, the right to promulgate rules and regulations, to levy and collect special assessments, rates, charges, service charges and connection fees, the performance of contractual obligations and any other matters arising out of the provision of District service to areas within the City, all pursuant to and in accordance with RCW Sections 39.34.080, 35.92.010, 35A.47.040, and 57.08.045; and

WHEREAS, the City has determined that the District can more economically provide water service to that certain area of its corporate limits as described in Exhibit A; and

WHEREAS, the District has the ability and desire to provide water service to this area; NOW, THEREFORE,

THE CITY COUNCIL OF THE CITY OF KENT, WASHINGTON, DOES HEREBY ORDAIN AS FOLLOWS:

SECTION 1. **FRANCHISE GRANTED.** The City of Kent, Washington (the "City" herein) hereby grants to King County Water District No. 111 (the "District" herein), a water district formed under Ch. 57.08 RCW, its successors and assigns, subject to the terms and conditions set forth hereinafter, a franchise for a period of twenty-five (25) years, commencing on the effective date of this ordinance. This franchise shall grant to the District the right and privilege to lay down, construct, relay, connect, replace and/or maintain such and so many pipes, conduits and mains, and all other appurtenances, appendages, and facilities thereto, in, along, through, and under the avenues, streets, lanes, alleys, highways, and other public places and ways in that portion of the Kent City limits as specifically described in **Exhibit A**, attached hereto and incorporated herein, as may be necessary, convenient and/or proper in order to provide water service to the public, and for that purpose to make any and all connections which may be necessary, convenient and/or proper.

SECTION 2. **AUTHORITY TO MANAGE, REGULATE, AND CONTROL WATER SYSTEM.** After the construction of the water facilities as contemplated under this franchise, the District shall have the sole responsibility to maintain, manage, conduct and operate its water system as installed within the area described in **Exhibit A**, together with any additions, extensions and betterments thereto.

SECTION 3. **AUTHORITY TO FIX SERVICE RATES.** The rates charged to the water service customers within the area described in **Exhibit A** shall be fixed, altered, regulated, and controlled solely by the District, pursuant to the limitations

on such authority as set forth in Ch. 57.08 RCW, or any applicable regulations promulgated thereafter by the state on the subject of rates and charges for water service.

SECTION 4. NON-EXCLUSIVE GRANT. This grant or privilege shall not be deemed or held to be exclusive. It shall in no manner prohibit the City from entering into other agreements or franchises of a like nature or franchises for other public or private utilities, in, over, along, across, under, and upon any of the streets, avenues, highways, alleys, or public places, or ways as herein described, and shall in no way prevent or prohibit the City from using any of said streets, avenues, etc., or affect its jurisdiction over them or any part of them with full power to make all necessary changes, relocations, repairs, or maintenance of same as it deems fit.

SECTION 5. APPROVAL OF PLANS. Prior to construction of any of the pipes, conduits, mains, facilities, and appurtenances in the area described in Section 1 herein, the District shall submit to the Director of Public Works (hereinafter the "Director") in triplicate, the plans drawn to an accurate scale, showing the exact location, character, position, dimension, depth, and height of the work to be done. The plans shall accurately depict the relative position and location of all pipes, conduits, mains, manholes, facilities, and appurtenances to be constructed, laid, re-laid, installed, replaced, repaired, connected or disconnected, and the existing street, avenue, alley, highway, right-or-way or property lines. All streets, avenues, highways, alleys, lanes, or ways denoted thereon shall be designated by their names and number and the local improvements therein such as roadway pavement, shoulders, sidewalks, curbs, gutters, ditches, driveways, parking strips, telephone or electric distribution poles, conduits, storm, gas, or water pipe lines as may exist on the ground or area sought to be occupied shall be outlined.

In the construction proposed by the District, all materials and equipment shall be as specified in the District's general conditions and standards and as approved by the City. The exact class and type to be used shall be shown on the plans, as will the equipment to

be used and the mode of safeguarding and facilitating the public traffic during construction. The manner of excavation, construction installation, backfill, and temporary structures (such as traffic turnouts, road obstructions, etc.) shall meet with the approval of, pass all requirements of, and be constructed under the supervision of the Director. Prior to approval of any work under this franchise, the Director may require such modifications or changes as he deems necessary to properly protect the public in the use of the public places, and may fix the time or times within and during which such work shall be done.

The District shall pay to the City such amounts as, in the judgment of the Director, are reasonably necessary to investigate and process any plans for construction work, to inspect such work, to secure proper field notes for location, to plat such locations on the permanent records of the City Public Works Department, to supervise such work, or to inspect or re-inspect as to maintenance, during the progress of or after the repair of, any of the initial construction authorized by this franchise. The City shall make its best efforts to complete all inspections in a timely manner.

SECTION 6. PROTECTION OF PUBLIC. Whenever an accident, faulty operation, or excavation or fill associated with the construction, installation, maintenance or repair of the facilities authorized under this franchise has caused or contributed to a condition that appears to substantially impair the lateral support of the adjoining street or public place, or endangers the public, and adjoining public place, street utilities or City property, the Director may direct the District, at its own expense, to take actions to protect the public, adjacent public places, City property and street utilities, and may require compliance within a prescribed time.

In the event that the District fails or refuses to take the actions directed promptly, or fails to fully comply with such directions given by the Director, or if emergency conditions exist which require immediate action, the City may enter upon the property and take such actions as are necessary to protect the public, the adjacent streets, or street utilities, or to maintain the lateral support thereof, including placing of temporary shoring,

backfilling, alterations of drainage patterns and any other actions reasonably necessary to decrease the possibility of earth movement, or actions regarded as necessary safety precautions; and the District shall be liable to the City for the costs thereof.

SECTION 7. **REPAIR OF STREETS, SIDEWALKS, AND PUBLIC PLACES.** After construction, maintenance, or repair of the facilities authorized by this Agreement, the District shall repair and restore any damaged or injured streets, avenues, highways, or public places, or affected portions of same, to their original condition. The Director shall have final approval of the condition of such streets and public places after completion of construction.

SECTION 8. **INDEMNIFICATION.** The District hereby releases, covenants not to bring suit and agrees to indemnify, defend, and hold harmless the City, its officers, officials, employees, agents, and representatives, from any and all claims, costs, judgments, awards, or liability to any person, including claims by the District's own employees to which the District might otherwise be immune under Title 51 RCW, arising from injury or death of any person or damage to property of which the negligent acts or omissions of the District, its agents, servants, officers, or employees in performing this franchise agreement are the proximate cause. The District further releases, covenants not to bring suit and agrees to indemnify, defend and hold harmless the City, its officers, officials, employees, agents and representatives from any and all claims, costs, judgments, awards or liability to any person including claims by the District's own employees, to which the District might otherwise be immune under Title 51 RCW, arising against the City solely by virtue of the City's ownership or control of the rights-of-way or other public properties by virtue of the District's exercise of the rights granted herein, or by virtue of the City's permitting the District's use of the City's rights-of-way or other public property, based upon the inspection or lack of inspection of work performed by the District, its agents, and servants, officers, or employees in connection with work authorized on the City's property or property over which the City has control, pursuant

to this franchise agreement or pursuant to any other permit or approval issued in connection hereto.

This covenant of indemnification shall include, but not be limited by this reference to, claims against the City arising as a result of the negligent acts or omissions of the District, its agents, servants, officers, or employees in barricading or providing other warnings of any excavation, construction, or work in any public right-of-way or other public place in performance of work or services permitted under this franchise agreement. Inspection or acceptance by the City of any work performed by the District at the time of completion shall not be grounds for avoidance of any of these covenants of indemnification. Said indemnification obligations shall extend to claims which are not reduced to a suit and any claims which may be compromised prior to the culmination of any litigation or the institution of any litigation, provided that the District shall not be liable to indemnify the City for any settlement of any action or claim effective without the consent of the District, but if settled with the consent of the District, the District shall indemnify and hold harmless the City from and against loss or liability by reason of such settlement. The District shall be obligated to indemnify the City regardless of whether the settlement of the action on the claim is made with the consent of the District if the District has refused to defend the City.

In the event that the District refuses the tender of defense in any suit or claim, said tender having been made pursuant to the indemnification clauses contained herein, and said refusal is subsequently determined by a court having jurisdiction (or such other tribunal that the parties shall agree to decide the matter) to have been a wrongful refusal on the part of the District, then the District shall pay all of the City's costs for defense of the action, including all reasonable expert witness fees and reasonable attorney's fees and the reasonable costs of the City, including reasonable attorney's fees for recovery under this indemnification clause.

Should a court of competent jurisdiction determine that this franchise is subject to RCW 4.24.115, then, in the event of liability for damages arising out of bodily injury to persons or damage to property caused by or resulting from the concurrent negligence

of the District and the City, its officers, officials, employees or agents, the District's liability hereunder shall be only to the extent of the District's negligence. It is further specifically and expressly understood that the indemnification provided herein constitutes the District's waiver of immunity under Title 51 RCW, solely for the purposes of this indemnification. This waiver has been mutually negotiated by the parties.

SECTION 9. INSURANCE. The District shall procure and maintain for the duration of this Agreement, insurance against claims for injuries to persons or damages to property which may arise from or in connection with the exercise of the rights, privileges and authority granted hereunder to the District, its officers, officials, agents, or employees. The District shall provide a copy of such insurance policy to the City for its inspection prior to the adoption of this agreement. Such insurance shall evidence:

A. Automobile Liability Insurance with limits no less than $1,000,000.00 Combined Single Limit per accident for bodily injury and property damage; and

B. Commercial General Liability Insurance written on an occurrence basis with limits no less than $1,000,000.00 Combined Single Limit per occurrence and $1,000,000.00 aggregate for personal injury, bodily injury, and property damage.

Any deductibles or self-insured retentions must be declared to and approved by the City. Payment of deductible or self-insured retention shall be the sole responsibility of the District.

The insurance obtained by the District shall name the City, its officers, officials, employees and agents as insureds with regard to activities performed by or on behalf of the District. The coverage shall contain no special limitations on the scope of protection afforded to the City, its officers, officials, employees or agents. In addition, the insurance policy shall contain a clause stating that coverage shall apply separately to each insured against whom claim is made or suit is brought, except with respect to the limits of the insurer's liability. The District's insurance shall be primary insurance as respects the City, its officers, officials, employees, and volunteers. Any insurance maintained by the City,

its officials, officers, employees, or agents shall be in excess of the District's insurance and shall not contribute with it.

The insurance policy or policies required by this clause shall be endorsed to state that coverage shall not be suspended, voided, canceled by either party, reduced in coverage or in limits except after thirty (30) days' prior written notice by certified mail, return receipt requested, has been given to the City. Any failure to comply with the reporting provisions of the policies shall not affect coverage provided to the City, its officers, officials, employees or volunteers.

SECTION 10. **RELOCATION OF LINES AND FACILITIES.** The District agrees and covenants at its sole cost and expense, to protect, support, temporarily disconnect, relocate, or remove from any street or public place, any of its installations when so required by the City by reason of traffic conditions or public safety, dedications, or new rights-of-way and the establishment and improvement thereof, freeway construction, change or establishment of street grade, or the construction of any public improvement or structure by any governmental agency acting in a governmental capacity, provided that the District shall in all such cases have the privilege to temporarily bypass, in the authorized portion of the same street upon approval by the City, any water line or portion thereof required to be temporarily disconnected or removed.

The City shall consult all as-built maps and plans filed by the District pursuant to this franchise or any permits authorized under this franchise, in order to determine whether the District has placed pipe or facilities in any area affected by a proposed City project. The City will make its best effort and attempt to design or redesign streets, avenues, alleys or public places or ways, and other City utilities to minimize the impact thereof on the District's existing water systems, including the need to require the District's facilities to be relocated. PROVIDED HOWEVER, that the City shall make the final determination on the need for relocation of the District's facilities.

Whenever the City determines that any of the above circumstances necessitate the relocation of the District's than existing facilities, the City shall notify the District in

writing, and provide the District with copies of pertinent portions of the plans and specifications for such project so that the District is able to relocate its facilities to accommodate the City's project at least ten (10) days prior to the project's commencement. The City shall provide notice to the District and require relocation of the facilities in a period of time that is reasonable given the circumstances surrounding the project. The City understands that pursuant to RCW 57.08.050, the District is required to comply with certain notice and bid procedures prior to commencement of any construction project. Whenever practical, given the circumstances surrounding the City's project, the City shall provide the District with sufficient notice to enable the District to comply fully with RCW 57.08.050 without resorting to emergency powers granted therein. Upon the District's failure to complete relocation of its installations and facilities as directed by the City, the City may remove same at the District's expense.

If, after reviewing the as-built maps and plans submitted by the District, the City determines that the District's pipe or facilities will not be affected by a proposed City project, no notice shall be given to the District. The City may then commence construction and if the City finds that the District's as-built maps and plans are inaccurate through the actual discovery of pipe and facilities in the construction area, the City shall notify the District and allow the District twenty-four (24) hours to remove and/or relocate its pipe and facilities. However, should the District be unable to remove and/or relocate its pipe and facilities within this twenty-four (24) hour period after notification, the City may remove and dispose of same at the District's cost.

SECTION 11. **ABANDONMENT OF WATER PIPE AND SYSTEM FACILITIES.** No pipe, conduit, main, appurtenances, appendages or water system facilities may be abandoned by the District without the express written consent of the City. Abandonment procedures may be initiated by application of the District to the City, which application shall detail, to the City's satisfaction, the location of all pipe or facilities to be abandoned, and the procedures the District plans to implement in order to comply with all local, state, and federal regulations pertaining to abandonment of water

pipe and facilities constructed of asbestos cement or other materials containing asbestos. The District shall, at its own cost, remove and properly dispose of all abandoned pipes and water facilities when so directed by the City for the reasons and conditions set forth in paragraph one, Section 10, **Relocation of Lines and Facilities**, and for street vacations. In the case of street vacations, the City shall retain and grant an easement to the District for any pipe and facilities then in use by the District. The City shall give notice to the District of any proposed project or street vacation requiring removal of abandoned pipe and facilities as set forth in Section 10. If the District does not comply within the time period set by the City, the City may arrange for the removal and proper disposal of all such pipes and facilities at the District's cost.

SECTION 12. EXCAVATION. During any period of installation, relocation, maintenance, or repair of the District's facilities and installations, all surface structures, if any, shall be erected and used in such places and positions within said public rights-of-way and other public properties so as to interfere as little as possible with the free passage of traffic and the free use of adjoining property, and the District shall at all times post and maintain proper barricades during such period of construction as required by state law or City ordinance.

Whenever the District shall excavate in any public right-of-way or other public property for the purpose of installation, repair, maintenance, or relocation of its facilities, it shall apply to the City for a permit to do so and except in the case of an emergency, shall give the City at least three (3) working days notice thereof. In the event that emergency work is required, the District may, without prior written notice to the City, request permits by telephone. The Director shall grant or deny such permits by telephone, but the District shall follow-up all phone emergency permit requests with a written application within three (3) working days of the telephone notification to the Director. In all other cases, the City shall approve the District's applications for permits as soon as reasonably possible. During the progress of the work, the District shall not unnecessarily obstruct the passage or proper use of the right-or-way, and shall file maps

or plans with the City (as described in Section 3 herein) showing the proposed and final location of the sewer facilities.

If either the City or the District shall at any time plan to make excavations in any area covered by this Agreement and as described in this section, the party planning such excavation shall afford the other, upon receipt of a written request to do so, an opportunity to share such excavation, PROVIDED THAT: (1) such joint use shall not unreasonably delay the work of the party causing the excavation to be made; (2) such joint use shall be arranged and accomplished on terms and conditions satisfactory to both parties; and (3) either party may deny such request for safety reasons.

Prior to commencement of any construction authorized by this franchise agreement, the Director shall reference all monuments and markers of every nature relating to subdivision plats, highways and all other surveys. The reference points shall be so located that they will not be disturbed during the District's operations under this franchise. The method of referencing these monuments or other points to be referenced shall be approved by the Director before placement. The replacement of all such monuments or markers disturbed during construction shall be made as expeditiously as conditions permit and as directed by the Director. The costs of monuments or other markers lost, destroyed, or disturbed and the expense of replacement by approved monuments shall be borne by the District.

SECTION 13. COMPLIANCE WITH LAWS. The District, its subcontractors, employees, or any person acting on behalf of the District shall keep him/herself fully informed of all federal and state laws, and all municipal ordinances and regulations which in any manner affect the work or performance of the work authorized under this franchise agreement, and shall at all times observe and comply with such laws, ordinances, and regulations, whether or not such laws, ordinances, or regulations are mentioned herein, and shall indemnify the city, its officers, officials, agents, employees or representatives against any claim or liability arising from or based upon the violation of any such laws, ordinances or regulations.

SECTION 14. **DISCRIMINATION.** The District agrees that it shall not discriminate against any employee or applicant on the grounds of race, creed, color, religion, national origin, sex, marital status, age or the presence of any sensory, mental, or physical handicap, provided that the prohibition against discrimination in employment because of handicap shall not apply if the particular disability prevents the proper performance of the particular worker involved. The District shall ensure that applicants are employed, and that employees are treated during employment, without discrimination because of their race, color, religion, sex, national origin, creed, marital status, age, or the presence of any sensory, mental, or physical handicap. The District shall take such action with respect to this franchise as may be required to ensure full compliance with Ch. 49.60 RCW.

SECTION 15. **CITY CONSTRUCTION ADJACENT TO DISTRICT INSTALLATION.** The laying, construction, maintenance, and operation of the said District's system of water lines, pipes, conduits, mains, etc., authorized under this franchise agreement shall not preclude the City or its accredited agents and contractors from blasting, grading or doing other necessary road work contiguous to the said District's pipe lines, provided that the District shall have forty-eight (48) hours notice of said blasting or excavation in order that the District may protect its line of pipe and property.

SECTION 16. **MODIFICATION.** The City and District hereby reserve the right to alter, amend or modify the terms and conditions of this franchise agreement upon written agreement of both parties to such alteration, amendment, or modification.

SECTION 17. **BOND.** Before undertaking any of the work, improvements, repair, relocation, or maintenance authorized by this franchise, the District shall, upon the request of the City furnish a bond executed by the District and a corporate surety authorized to do surety business in the State of Washington, in a sum to be set and

approved by the Director of Public Works as sufficient to ensure performance of the District's obligations under this franchise. The bond shall be conditioned so that the District shall observe all the covenants, terms, and conditions and faithfully perform all of the obligations of this franchise, and to erect or replace any defective work or materials discovered in the replacement of the City's streets or property within a period of two (2) years from the date of replacement and acceptance of such repaired streets by the City.

SECTION 18. **FORFEITURE AND REVOCATION.** If the District willfully violates or fails to comply with any of the provisions of this franchise, or through willful or unreasonable negligence fails to heed or comply with any notice given the District under the provisions of this franchise, then the District shall, at the election of the Kent City Council, forfeit all rights conferred hereunder and this franchise may be revoked or annulled by the Council after a hearing held upon reasonable notice to the District. The City may elect, in lieu of the above and without any prejudice to any of its other legal rights and remedies, to obtain an order from the superior court having jurisdiction compelling the District to comply with the provisions of this franchise and to recover damages and costs incurred by the City by reason of the District's failure to comply.

SECTION 19. **REMEDIES TO ENFORCE COMPLIANCE.** In addition to any other remedy provided herein, the City reserves the right to pursue any remedy to compel or force the District and/or its successors and assigns to comply with the terms hereof, and the pursuit of any right or remedy by the City shall not prevent the City from thereafter declaring a forfeiture or revocation for breach of the conditions herein. This franchise ordinance shall not in any way affect the District's obligation to obtain all necessary permits and to comply with all City ordinances, rules, and regulations as they apply to any work or activity subject to this franchise.

SECTION 20. CITY ORDINANCES AND REGULATIONS. Nothing herein shall be deemed to direct the City's ability to adopt and enforce all necessary and appropriate ordinances regulating the performance of the conditions of this franchise, including any reasonable ordinance made in the exercise of its police powers in the interest of the public safety and for the welfare of the public. The City shall have the authority at all times to control by appropriate regulations the location, elevation and manner of construction and maintenance of any water facilities by the District, and the District shall promptly conform with all such regulations, unless compliance would cause the District to violate other requirements of law.

SECTION 21. COST OF PUBLICATION. The cost of publication of this franchise ordinance shall be borne by the District.

SECTION 22. ASSIGNMENT. The District may not assign the rights, duties, and obligations under this Agreement without the prior, written consent of the City, which consent shall not be unreasonably withheld. If such consent is given for assignment, acceptance of the assignment shall be filed by the District's successor with the City.

SECTION 23. SUCCESSORS AND ASSIGNS. All the provisions, conditions, regulations, and requirements contained in this Agreement shall be binding upon the successors and assigns of the District, and all privileges of the District shall inure to its successors and assigns equally as if they were specifically mentioned herein.

SECTION 24. NOTICE. Any notice or information required or permitted to be given to the parties under this Agreement may be sent to the following addresses unless otherwise specified:

THE CITY OF KENT
Director of Public Works
220 Fourth Avenue South
Kent Washington 98032

KING CO. WATER DISTRICT NO. 111
General Manager
27224 - 144th Avenue SE
Kent Washington 98042-9058

SECTION 25. ACCEPTANCE. After the passage and approval of this ordinance and within sixty (60) days after such approval, this franchise shall be accepted by the District by its filing with the City Clerk an unconditional written acceptance thereof. Failure of the Grantee to so accept this franchise within said period of time shall be deemed a rejection thereof by the District, and the rights and privileges herein granted shall, after the expiration of the sixty (60) day period, absolutely cease and determine, unless the time period is extended by ordinance duly passed for that purpose.

SECTION 26. SURVIVAL. All of the provisions, conditions, and requirements of Section 6, **Protection of Public**; 8, **Indemnification**; 10, **Relocation of Lines and Facilities**; and 11, **Abandonment of Lines and Facilities**, of this franchise shall be in addition to any and all other obligations and liabilities the District may have to the City at common law, by statute, or by contract, and shall survive the City's franchise to the District for the use of the areas mentioned in Section 1 herein, and any renewals or extensions thereof. All of the provisions, conditions, regulations, and requirements contained in this franchise ordinance shall further be binding upon the successors and assigns of the District, and all privileges, as well as all obligations and liabilities of the District shall inure to its successors and assigns equally as if they were specifically mentioned wherever the District is named herein.

SECTION 27. SEVERABILITY. If any section, sentence, clause, or phrase of this franchise ordinance should be held to be invalid or unconstitutional by a court of competent jurisdiction, such invalidity or unconstitutionality shall not affect the validity or constitutionality of any other section, sentence, clause or phrase of this franchise. In the even that any of the provisions of this franchise are held to be invalid

by a court of competent jurisdiction, the City reserves the right to reconsider the grant of this franchise and may amend, repeal, add, replace or modify any other provision, or may terminate this franchise.

SECTION 28. **EFFECTIVE DATE.** This franchise ordinance shall be: (1) submitted to the Kent City Attorney; (2) introduced at least once at a regular meeting of the Kent City Council; (3) published at least once in a newspaper of general circulation in the City of Kent; and if granted by the approving vote of at least a majority of the City Council, shall be effective in thirty (30) days after execution.

JIM WHITE, MAYOR

ATTEST:

BRENDA JACOBER, CITY CLERK

APPROVED AS TO FORM:

ROGER A. LUBOVICH, CITY ATTORNEY

PASSED: 16 day of March, 1999.

APPROVED: 16 day of March, 1999.

PUBLISHED: 19 day of March, 1999.

I hereby certify that this is a true copy of Ordinance No. 3447, passed by the City Council of the City of Kent, Washington, and approved by the Mayor of the City of Kent as hereon indicated.

(SEAL)
BRENDA JACOBER, CITY CLERK

P:\Civil\Ordinances\district no. 111.ord.doc

EXHIBIT "A"

WATER DISTRICT #111 OF KING COUNTY
CITY OF KENT FRANCHISE LEGAL DESCRIPTION

November 18, 1998

BEGINNING at the intersection of a line lying 495 feet West of the East line of the Northwest quarter of Section 21, Township 22 North, Range 5 East, W.M. in King County, Washington with the South margin of SE 240th Street;

Thence Easterly along said South margin to the West line of the East half of the Northeast quarter of said Section 21;

Thence Northerly perpendicular to said South margin to the centerline of SE 240th Street;

Thence Easterly along said centerline to its intersection with the Northerly margin of said SE 240th Street in the Northeast quarter of Section 22, Township 22 North, Range 5 East, W.M., in King County, Washington;

Thence Southeasterly, Southerly, Southwesterly and Southerly along said Northerly margin of SE 240th Street, the Easterly margin of 148th Place SE and the East margin of 148th Avenue SE to the East margin of Soos Creek Drive SE in the Northwest quarter of Section 26, Township 22 North, Range 5 East, W.M., in King County, Washington;

Thence continuing Southerly and Southeasterly along said East margin to the North line of Lot 3 of King County Short Plat No. 880080, recorded under Recording No. 8110140550, records of King County, Washington;

Thence Easterly along said North line to the East line of said Lot 3;

Thence Southerly along said East line to the North margin of SE 264th Street;

Thence Easterly along said North margin to the West line of the East half of the Southeast quarter of the Northwest quarter of Section 26, Township 22 North, Range 5 East, W.M.;

Thence Southerly along said West line and the West line of the East half of the Northeast quarter of the Southwest quarter of said Section 26 to the South line of said Northeast quarter;

Thence Easterly along said South line to the East line of said Southwest quarter of Section 26;

Thence Southerly along said East line to its intersection with the centerline of the Bonneville Transmission Line Easement (Covington - Renton 1);

EXHIBIT "A", continued

Thence Southeasterly along said centerline to the North margin of SE 272nd Street;

Thence Easterly along said North margin to the centerline of Soos Creek;

Thence Southerly along said centerline to the South line of the North half of the Northwest quarter of the Northeast quarter of Section 35, Township 22 North, Range 5 East, W.M.;

Thence Westerly along said South line to the East line of Lot 1 of King County Short Plat No. 883126, recorded under Recording No. 8405231102, records of King County, Washington;

Thence Southerly along said East line to the North line of the South half of the South half of said Northwest quarter of the Northeast quarter;

Thence Easterly along said North line to the centerline of Soos Creek;

Thence Southerly along said centerline to the Northwest margin of Primary State Highway No. 2 (S.R. 18);

Thence Southwesterly along said Northwest margin to the North margin of SE 288th Street in the Southeast quarter of the Southeast quarter of Section 34, Township 22 North, Range 5 East, W.M.;

Thence Westerly along said North margin to the West margin of 132nd Avenue SE;

Thence Northerly along said West margin to the South line of the North half of the North half of the Southeast quarter of Section 33, Township 22 North, Range 5 East, W.M;

Thence Westerly along said South line to the Southeasterly margin of SE 282nd Way;

Thence Southwesterly and Westerly along said Southeasterly margin and the South margin of SE 282nd Street to the West margin of 124th Avenue SE;

Thence Northerly along said West margin to the South line of the Northeast quarter of the Northwest quarter of Section 33, Township 22 North, Range 5 East, W.M.;

Thence Easterly along said South line and the South line of the Northwest quarter of the Northeast quarter of said Section 33 to a point 440 feet West of the Southeast corner thereof;

Thence Northerly and parallel with the East line of said Northwest quarter of the Northeast quarter to the South line of the North half of the North half of said Northwest quarter of the Northeast quarter;

EXHIBIT "A", continued

Thence Easterly along said South line of the North half of the North half of the Northwest quarter of the Northeast quarter to the Southeast corner thereof;

Thence Northerly along the East line of said Northwest quarter of the Northeast quarter to the Northeast corner thereof;

Thence Westerly along the North line of said Section 33 to the East line of the Big "K" Addition No. 2, according to the Plat thereof recorded in Volume 78 of Plats, Page 16, records of King County, Washington;

Thence Northerly along said East line to the Northeasterly line thereof;

Thence Northwesterly along said Northeasterly line to the Northeast corner of the Big "K" Addition, according to the Plat thereof recorded in Volume 67 of Plats, Page 66, records of King County, Washington;

Thence continuing Northwesterly along the Northeasterly line of said Big "K" Addition and its Northwesterly extension to its intersection with the West margin of 124th Avenue Southeast;

Thence Northerly along said West margin to its intersection with the South line of the North 507 feet of the Northeast quarter of the Southwest quarter of Section 28, Township 22 North, Range 5 East, W.M.;

Thence Westerly along said South line to the West line of the East 149.8 feet of said Northeast quarter of the Southwest quarter;

Thence Northerly along said West line to the North line of said Southwest quarter of Section 28;

Thence Westerly along said North line to its intersection with a line that is 495 feet West of and parallel with the East line of the Northwest quarter of said Section 28;

Thence Northerly along said line that is 495 feet West of and parallel with said East line of the Northwest quarter and the Southwest and Northwest quarters of Section 21, Township 22 North, Range 5 East, W.M. to its intersection with the South margin of Southeast 240th Street and the POINT OF BEGINNING of this description.

ORDINANCE NO. 4241

AN ORDINANCE of the City Council of the City of Kent, Washington, granting King County Water District No. 111 a non-exclusive franchise to construct, maintain, operate, replace and repair a water system within public rights-of-way of the City of Kent, and fixing a time when the same shall become effective.

RECITALS

A. King County Water District No. 111, a Washington special purpose municipal corporation ("District"), owns water facilities ("Facilities") located in the City of Kent, a Washington non-charter municipal code city ("City"), and a portion of such Facilities are located within the City right-of-way as hereinafter defined; and

B. RCW 57.08.005 (3) authorizes the District to conduct water throughout the District and any city and town therein, and construct and lay facilities along and upon public highways, roads and streets within and without the District; and

C. RCW 35A.47.040 authorizes the City to grant non-exclusive franchises for the use of the public streets above or below the surface of the ground by publicly owned and operated water facilities; and

D. the City and the District have prepared a Franchise Agreement to provide for the operation of District Facilities within the City right-of-way;

NOW, THEREFORE, THE CITY COUNCIL OF THE CITY OF KENT, WASHINGTON, DOES HEREBY ORDAIN AS FOLLOWS:

ORDINANCE

SECTION 1. - *Definitions.* Where used in this franchise (the "Franchise") these terms have the following meanings:

A. "City" means the City of Kent, a Washington municipal corporation, and its respective successors and assigns.

B. "District" means King County Water District No. 111, a Washington municipal corporation, and its respective successors and assigns.

C. "Facilities" means tanks, reservoirs, water treatment facilities, meters, pipes, mains, services, valves, blow offs, vaults, fire suppression water facilities, risers, generators, electrical control panels, power meters, telephone connections, pressure reducing valves ("PRVs"), pump stations, meter stations, interties, lines, and all other necessary or convenient facilities and appurtenances thereto for the purpose of operating a water utility system, whether the same be located over or under ground.

D. "Franchise Area" means every and all of the public roads, streets, avenues, alleys, highways and rights-of-way of the City as now or hereafter laid out, platted, dedicated or improved in District's service area within the present corporate boundaries of the City, and as such corporate boundaries may be extended within District's service area by annexation or otherwise.

E. "Ordinance" means this Ordinance No. 4241, which sets forth the terms and conditions of this Franchise.

F. "Party" or "Parties" means the City or the District individually, or collectively as addressed in this Franchise.

G. "Revenue" means income received by the District from the sale of metered water to direct retail customers whose connections to the District's water system are located within the City. Revenue shall not include: impact or mitigation fees; permit fees and costs; any type of connection charges, general facilities charges, or local facilities charges; local improvement district and utility local improvement district assessments and payments; grants; contributed assets (contributions in aid of construction); loans; income from legal settlements not related to water sales to District customers; income from telecommunication leases or licenses; income from real property or from real property sales; income from the sale of surplus equipment, tools or vehicles; interest income; hydraulic modeling fees; water availability document fees and charges; water system extension agreement fees and charges; income from street lights; labor, equipment and materials charges; or any other fees and charges.

SECTION 2. - *Franchise.*

A. The City does hereby grant to District the right, privilege, authority and franchise to construct, install, lay, support, attach, maintain, repair, renew, replace, remove, enlarge, operate and use Facilities in, upon, over, under, along, through and across open city right-of-ways within the Franchise Area for purposes of its water utility functions as defined in Title 57 RCW beginning on the Effective Date of this Franchise; provided the City's grant of the right to use the Franchise Area to the District as

provided herein for its Facilities shall not be construed to require the District to provide such Facilities to the City.

B. Nothing contained in this Ordinance is to be construed as granting permission to District to go upon any other public place other than those types of public places specifically designated as the Franchise Area in this Ordinance. Permission to go upon any other property owned or controlled by the City must be sought on a case-by-case basis from the City.

C. In addition to the rights granted to the District to undertake and perform activities within the Franchise Area as provided herein, District shall have the right to discharge District water supply to and into the City's storm water system while performing water system flushing and other District activities, provided any District water to be discharged to the City's storm water system must comply with all applicable federal and state water quality standards and the City's NPDES permit relating to the City's storm water system.

D. At all times during the term of this Franchise, District shall fully comply with all applicable federal, state, and local laws and regulations.

SECTION 3. - *Non-interference of Facilities.*

A. Survey monuments shall not be removed or destroyed without the District first obtaining the required Department of Natural Resources (DNR) permit in accordance with RCW 58.09.130 and WAC 332-120-030, and as such statute and regulation may be modified and amended. All survey monuments which have been distributed or displaced by such work shall be restored pursuant to all federal, state and local standards and specifications. District agrees to promptly complete all restoration work

and to promptly repair any damage caused by such work at its sole expense.

B. If it is determined that the District has failed to restore the right-of-way in accordance with this Section, the City shall provide the District with written notice, which shall include a description of actions the City believes necessary to restore the right-of-way. If the right-of-way is not restored in accordance with the City's notice within fifteen (15) days of that notice, or such longer period as may be specified in the notice, the City, or its authorized agent, may restore the right-of-way and District shall be responsible for all reasonable costs and expenses incurred by the City in restoring the right-of-way in accordance with this Section. The rights granted to the City under this Section shall be in addition to those otherwise provided by this Franchise.

SECTION 4. - *Relocation of Facilities.*

A. Subject to each party's prior and consistent compliance with the Section 6 Planning Coordination requirements below, whenever the City causes the grading or widening of the Franchise Area or undertakes construction of storm drainage lines, lighting, signalization, sidewalk improvement, pedestrian amenities, or other public street improvements (for purposes other than those described in Section 4(D) below) and such project requires the relocation of the District's then existing Facilities within the Franchise Area, the City shall:

(1) Pursuant to RCW 35.21.905, or as amended, consult with the District in the predesign phase of any such project; and

(2) After receipt of written notice from the City, the District shall design and relocate such Facilities within the Franchise Area within ninety

(90) days for a smaller project and two hundred forty (240) days for a larger project to accommodate the City project, unless the Parties agree on a different time; in any event, the City and the District will, in good faith, use their best efforts to coordinate their project schedules to avoid delay to the City's project. A smaller project could be adjusting, at minimal time and cost, a water service line or a meter to a new grade or location, relocation of a valve box, relocation or extension of a fire hydrant, or relocation of an air vac assembly or blow off. Notwithstanding the above, the District may, at any time within thirty (30) calendar days after receipt of written notice requesting the relocation of its Facilities, submit to the City written alternatives to such relocations. The City shall within a reasonable time evaluate such alternatives and advise the District in writing whether one or more of the alternatives is suitable to accommodate work that would otherwise necessitate relocation of the Facilities. If so requested by the City, District shall submit such additional information as is necessary to assist the City in making such evaluation. The City shall give each alternative full and fair consideration. In the event the City reasonably determines there is no other reasonable or feasible alternative, the City shall provide the District with further written notice to that effect. In that event, the City shall provide the District with conceptual plans and specifications for the City project and the District shall then relocate its Facilities by the date so established.

(3) Coordinate and work with the District to minimize conflicts between existing Facilities and the public improvements where possible, and to avoid having the District relocate its Facilities whenever possible.

B. If a city project causes the relocation of District Facilities, the cost of relocating such Facilities existing within the Franchise Area shall be paid as follows:

(1) If the relocation occurs within ten (10) years after the District initially constructed such Facility at the District's cost, then the City shall pay fifty percent (50%) of the cost of such relocation and the District shall pay the remaining fifty percent (50%);

(2) If the relocation occurs more than ten (10) years after the District initially constructed such Facility, then the relocation shall be at the District's sole cost.

C. Whenever any person or entity, other than the City, requires the relocation of District Facilities to accommodate the work of such person or entity within the Franchise Area, or whenever the City requires the relocation of District Facilities within the Franchise Area for the benefit of any person or entity other than the City or the Washington State Department of Transportation, then District shall have the right as a pre-condition of such relocation to require such person or entity to:

(1) Make payment to District at a time and upon terms acceptable to the District for any and all costs and expense incurred by the District in the relocation of District Facilities; and

(2) Protect, defend, indemnify and save the District harmless from any and all claims and demands made against it on account of injury or damage to the person or property of another arising out of or in conjunction with the relocation of District Facilities, to the extent such injury or damage is caused by the negligence or willful misconduct of the person or entity requesting the relocation of District Facilities or other negligence or willful misconduct of the agents, servants or employees of the person or entity requesting the relocation of District Facilities.

D. This Section 4 shall govern all relocations of District's Facilities required in accordance with this Franchise. Any cost or expense in connection with the location or relocation of any Facilities existing under benefit of easement or other right not in the Franchise Area shall be borne by the City, provided the City obtains the District's prior consent to such location or relocation.

E. For the purpose of this Section 4, a project or improvement is considered to be caused by the City (as described in Section 4(A) above) if it is permitted by the City and both of the following conditions exist:

(1) The City is the lead agency for the project or improvement, and

(2) The City is responsible for the majority of the overall costs of the improvement or project, which, if applicable, includes any grant money received by the City from any federal or state agency but shall not include any funds received by the City from third parties such as developer assessments, impact fees, contributions in aid of construction, and contributions in lieu of construction.

F. If a City project requires the relocation of then existing Facilities within the Franchise Area as provided in this Section 4, the District and the City may agree to include the relocation of any Facilities as required as part of the City's public works project under terms and conditions agreed between the City and the District.

SECTION 5. - *Right-of-Way Management.*

A. Excavation. Whenever the District excavates in any right-of-way for the purpose of installation, construction, operation, maintenance, repair or relocation of its Facilities, it shall apply to the City for a permit to do so in

accordance with the ordinances and regulations of the City requiring permits to operate in City right-of-way. No District work shall commence within any City right-of-way without a permit, except as otherwise provided in this Franchise and applicable City Ordinance.

B. Restoration after Construction. The District shall, after any installation, construction, relocation, operation, maintenance or repair of Facilities within the Franchise Area, restore the right-of-way as nearly as reasonably possible to its condition prior to any such work. The District agrees to promptly complete all restoration work and to promptly repair any damage to the right-of-way caused by such work at its sole cost and expense. If it is determined the District has failed to restore the right-of-way in accordance with this Franchise and other applicable City regulations, the City shall provide the District with written notice including a description of the actions the City believes necessary to restore the right-of-way.

C. Bonding Requirement. The District, as a public agency, shall not be required to comply with the City's standard bonding requirement for working in the City's right-of-way.

D. Emergency Work, Permit Waiver. In the event of an emergency where any District Facilities located in the right-of-way are broken or damaged, or if the District's construction area for the District's Facilities is in a condition as to place health or safety of any person or property in imminent danger, the District shall immediately take any necessary emergency measures to repair, replace or remove its Facilities without first applying for and obtaining a permit as required by this Franchise; provided the District shall notify the City as soon as reasonably possible relative to such emergency activity and shall immediately obtain a permit for such activity if required by this Franchise or City Ordinance.

E. City Work Zones. The District shall not be required to obtain a City right-of-way permit to undertake utility work when the City and the District by separate agreement are jointly undertaking a project in the Franchise Area and the District work is located within the City "work zone" for which the City has already approved a traffic control, pedestrian safety or other applicable plans.

F. Complete Right-of-Way Permit Applications. If the District is required to obtain a City right-of-way permit to undertake utility work within City right-of-way, the City shall issue a permit as soon as reasonably possible and will use its best efforts to issue the permit within ten (10) business days of receiving a complete application for such permit from the District.

G. City Invoices. The City shall invoice the District for all City fees and charges relating to the issuance of any City right-of-way permit to the District, including inspection fees and charges, on a monthly basis, and the City's final fees and charges within thirty (30) days of the completion of any District work in City right-of-way subject to a City permit, and the City's final acceptance of any such District work.

SECTION 6. - *Planning Coordination.*

A. The Parties agree to participate in the development of, and reasonable updates to, the other Party's planning documents to the extent they apply to the District's service area within the City limits as follows:

(1) Each Party will participate in a cooperative effort to develop their respective Comprehensive Plan Utilities Elements that meet the requirements described in RCW 36.70A.070 (4).

(2) Each Party will participate in a cooperative effort with the other Party to ensure that the Utilities Elements of their Comprehensive Plans are accurate as they relate to their operations and are updated to ensure continued relevance at reasonable intervals.

(3) Each Party shall submit information related to the general location, proposed location, and capacity of all existing and proposed Facilities as requested by the other Party within a reasonable time, not exceeding sixty (60) days from receipt of a written request for such information, provided that such information is in the non-requesting Party's possession, or can be reasonably developed from the information in the non-requesting Party's possession.

(4) Each Party will provide information relevant to their operations within a reasonable period of written request to assist the other Party in the development or update of their respective Comprehensive Plan(s), provided that such information is in the non-requesting Party's possession, or can be reasonably developed from the information in the non-requesting Party's possession.

B. District and City shall each assign a representative whose responsibility shall be to coordinate planning for capital improvement plan projects including those that involve undergrounding. At a minimum, such coordination shall include:

(1) For the purpose of planning, the District and the City shall provide each other with a copy of their respective current adopted Capital Improvement Plan annually and upon request by the other Party.

(2) By February 1st of each year, District shall provide the City with a schedule of the District's planned capital improvements which may affect the rights-of-way for that year.

(3) By February 1st of each year, City shall provide the District with a schedule of City's planned capital improvements which may affect the rights-of-way for that year including but not limited to street overlays and repairs, storm drainage improvements and construction, and all other rights-of-way activities that could affect District capital improvements and infrastructure.

(4) The District shall meet with the City, and other franchisees and users of the right-of-way, as necessary, to schedule and coordinate construction activities.

(5) All construction locations, activities, and schedules should be coordinated to minimize public inconvenience, disruption or damages.

(6) The City and the District agree to cooperate in the planning and implementation of emergency operations response procedures.

(7) Without charge to either Party, both Parties agree to provide each other with as-built plans, maps and records in electronic format as available that show the location of its facilities within rights-of-way.

SECTION 7. - *Indemnification.*

A. District shall indemnify, defend and hold the City, its agents, officers, employees, volunteers and assigns harmless from and against any and all claims, demands, liability, loss, cost, damage or expense of any nature whatsoever, including all costs and attorney's fees, made against

them on account of injury, sickness, death or damage to persons or property which is caused by or arises out of, in whole or in part, the willful, tortious or negligent acts, failures and/or omissions of District or its agents, servants, employees, contractors, subcontractors or assigns in exercising the rights granted District in this Franchise; provided, however, such indemnification shall not extend to injury or damage to the extent caused by the negligence or willful misconduct of the City, its agents, officers, employees, volunteers or assigns.

B. City shall indemnify, defend and hold the District, its agents, officers, employees, volunteers and assigns harmless from and against any and all claims, demands, liability, loss, cost, damage or expense of any nature whatsoever, including all costs and attorney's fees, made against them on account of injury, sickness, death or damage to persons or property which is caused by or arises out of, in whole or in part, the willful, tortious or negligent acts, failures and/or omissions of City or its agents, servants, employees, contractors, subcontractors or assigns in exercising the rights granted City in this Franchise; provided, however, such indemnification shall not extend to injury or damage to the extent caused by the negligence or willful misconduct of the District, its agents, officers, employees, volunteers or assigns.

C. In the event any such claim or demand be presented to or filed with the District or the City arising out of or relating to the acts or omissions in whole or in part of the other Party, the Party shall promptly notify the other Party thereof, and the notified Party shall have the right, at its election and at its sole cost and expense, to settle and compromise such claim or demand.

D. Should a court of competent jurisdiction determine that this Franchise is subject to RCW 4.24.115, then, in the event of liability for

damages arising out of bodily injury to persons or damages to property caused by or resulting from the concurrent negligence of City and District, their officers, employees and agents, District's liability hereunder shall be only to the extent of District's negligence. It is further specifically and expressly understood that the indemnification provided herein constitutes the parties' waiver of immunity under Industrial Insurance, Title 51 RCW, solely for the purposes of this indemnification.

SECTION 8. - *Default.* If the District fails to comply with any of the provisions of this Franchise, unless otherwise provided for herein, the City may serve upon the District a written order to so comply within thirty (30) days from the date such order is received by the District. If the District is not in compliance with this Franchise after expiration of said thirty (30) day period, the City may act to remedy the violation and may charge the costs and expenses of such action to District. The City may act without the thirty (30) day notice in case of an emergency.

SECTION 9. - *Non-exclusive Franchise.* This Franchise is not and shall not be deemed to be an exclusive Franchise. This Franchise shall not in any manner prohibit the City from granting other and further franchises over, upon, and along the Franchise Area, which do not interfere with District's rights under this Franchise. This Franchise shall not prohibit or prevent the City from using the Franchise Area or affect the jurisdiction of the City over the same or any part thereof.

SECTION 10. - *Franchise Term.* This Franchise shall have a term of ten (10) years from its Effective Date as defined in Section 29 herein; provided, this Franchise shall be automatically extended for one additional five (5) year period unless either Party at least one hundred eighty (180) days prior to the termination date of the Franchise provides written notice to the other Party of its intent to terminate the Franchise at the end of the

Franchise term; provided, at the end of the five (5) year term, this Franchise shall be automatically extended for successive one (1) year periods unless either Party at least one hundred twenty (120) prior to the termination date of any one (1) year extension provides written notice to the other Party of its intent to terminate the Franchise at the end of the then current Franchise term.

SECTION 11. - *Non-assumption.* In consideration of the District's payment of the Franchise Fee to the City as provided in Section 12 herein, and the District's acceptance of the other terms and conditions of this Franchise, the City agrees not to exercise and to forbear its statutory authority pursuant to chapter 35.13A RCW or other statutes to attempt to assume jurisdiction over all or part of the District or any District responsibilities, property, facilities, equipment or utility customers located within or without the City's corporate limits during the term of this Franchise. The City's agreement and forbearance includes not facilitating or cooperating with any other city or town to attempt pursuant to RCW 35.13A.060 or as such statute may be amended or superseded to assume jurisdiction over the District or any District responsibilities, property, facilities, equipment or utility customers located within or without the City's corporate limits during the term of this Franchise.

SECTION 12. - *Franchise Fee.*

A. In consideration of the rights granted the District under this Franchise, the District shall pay to the City a franchise fee ("Franchise Fee") in the amount of six percent (6.0%) of the District's Revenue beginning the first day of the first calendar quarter occurring at least sixty (60) days after the Effective Date of this Franchise, subject to the provisions of Section 12(B) herein.

B. Franchise Fees shall be paid to the City in quarterly installments. Franchise Fee payments for each calendar quarter or portion thereof shall be due thirty (30) days following the end of the calendar quarter (quarters ending at the end of March, June, September and December).

C. Should the District be prevented by judicial or legislative action from paying any or all of the Franchise Fees, the District shall be excused from paying that portion of the Franchise Fee and this Franchise agreement will immediately terminate, unless the Parties otherwise agree.

D. In consideration of the District's payment of a Franchise Fee to the City as provided in Section 12 herein, and the District's acceptance of the other terms and conditions of this Franchise, the City agrees not to exercise and to forbear any legal authority it may have to impose a utility, business and occupation tax, public utility tax, privilege tax, excise tax or any other tax (collectively, "Excise Tax") upon the District based on the District's revenues, gross receipts, or gross income during the term of this Franchise. However, if a court of competent jurisdiction determines the City may not agree to forbear its statutory authority to impose an Excise Tax upon the District based on the District's revenues, gross receipts, or gross income during the term of this Franchise, or to limit any such Excise Tax on the District's revenues, gross receipts, or gross income, the District shall have the right and option, at its sole election, to (1) terminate this Franchise and the payment of Franchise Fees to the City, and if the City determines to impose an Excise Tax on the District, the District shall have the right to bring an action to challenge the legal validity of any such Excise Tax, or (2) if the Parties mutually agree, elect not to terminate this Franchise and the District may agree to pay any such Excise Tax, provided the District's Franchise Fees herein to the City shall be credited against any such Excise Tax the City may impose.

E. In consideration of the District's payment of a Franchise Fee to the City as provided herein, and the District's acceptance of the other terms and conditions of this Franchise, the City agrees not to exercise and to forbear any legal authority it may have to impose compensation or a rental fee (collectively, "Rental Fee") upon the District for the District's use of the Franchise Area as provided for herein.

F. The District shall have the right to recover the Franchise Fee from the District's ratepayers residing within the City and may identify the Franchise Fee as a separate billing item on utility customer billings by using the following line item:

"Effect of City of Kent Franchise Fee: $X.xx"

SECTION 13. - *Compliance with Codes and Regulations.*

A. The rights, privileges and authority herein granted are subject to and governed by this ordinance and all other applicable City ordinances and codes, as they now exist or may hereafter be amended, provided the City shall not unreasonably affect or modify any portion of this Franchise without District's written approval. Nothing in this ordinance limits the City's lawful power to exercise its police power to protect the safety and welfare of the general public. Any location, relocation, erection or excavation by District shall be performed by District in accordance with applicable federal, state and City rules and regulations, including the City public works policies and pre-approved plans, and any required permits, licenses or regulatory fees, and applicable safety standards then in effect or any Memorandum of Understanding with District.

B. If any territory served by District is annexed to the City after the Effective Date of this Franchise, this Franchise shall be deemed to be the

new agreement required to be granted to a franchisee in annexed territory by RCW 35A.14.900 for whatever period of time is then remaining under this Franchise for the Franchise Area, unless a longer time period is required by that statute. Such territory shall then be governed by the terms and conditions contained herein upon the effective date of such annexation. The first Franchise Fee for any annexed area shall be calculated pro rata from the effective date of the annexation to the end of the next calendar quarter and paid to the City at the same time as the fee for the Franchise Area is paid for that quarter.

SECTION 14. - *Location of Facilities and Equipment.* With the exception of components that are traditionally installed above ground such as fire hydrants, blow offs, vault lids, risers, pump stations, generators, electrical control panels, power meters, telephone connections, automated reading equipment and appurtenances, and utility markers, all Facilities and equipment to be installed within the Franchise Area shall be installed underground; provided, however, that such Facilities may be installed above ground if so authorized by the City, which authorization shall not be unreasonably withheld, conditioned or delayed, consistent with the provisions of the City's land use and zoning code and applicable development pre-approved plans.

SECTION 15. - *Record of Installations and Service.* With respect to excavations by District and the City within the Franchise Area, District and the City shall each comply with its respective obligations pursuant to chapter 19.122 RCW, and as such statute may be modified and amended, and any other applicable state law.

Upon written request of the City, District shall provide the City with the most recent update available of any plan of potential improvements to its Facilities within the Franchise Area; provided, however, any such plan so

submitted shall only be for informational purposes within the Franchise Area, nor shall such plan be construed as a proposal to undertake any specific improvements within the Franchise Area.

Upon written request of District, the City shall provide District with the most recent update available of any plan of potential improvements to its improvements located within the Franchise Area; provided, however, any such plan so submitted shall only be for informational purposes within the Franchise Area, nor shall such plan be construed as a proposal to undertake any specific improvements within the Franchise Area.

As-built drawings of the location of any Facilities placed by District in the Franchise Area, shall be made available to the City within ten (10) working days of request.

SECTION 16. - *Shared Use of Excavations.*

A. District and the City shall exercise best efforts to coordinate construction work that either Party may undertake within the Franchise Area so as to promote the orderly and expeditious performance and completion of such work as a whole. Such efforts shall include, at a minimum, reasonable and diligent efforts to keep the other Party and other utilities within the Franchise Areas informed of its intent to undertake such construction work. District and the City shall further exercise best efforts to minimize any delay or hindrance to any construction work undertaken by themselves or other utilities within the Franchise Area.

B. If at any time, or from time to time, either District, the City, or another franchisee, shall cause excavations to be made within the Franchise Area, the Party causing such excavation to be made shall afford

the others, upon receipt of a written request to do so, an opportunity to use such excavation, provided that:

(1) No statutes, laws, regulations, ordinances or District policies prohibit or restrict the proximity of other utilities or facilities to District's Facilities installed or to be installed within the area to be excavated;

(2) Such joint use shall not unreasonably delay the work of the Party causing the excavation to be made;

(3) Such joint use shall be arranged and accomplished on terms and conditions satisfactory to both Parties. The Parties shall each cooperate with other utilities in the Franchise Area to minimize hindrance or delay in construction.

SECTION 17. - *Insurance.* District shall maintain in full force and effect throughout the term of this Franchise, a minimum of Two Million Dollars ($2,000,000.00) liability insurance for property damage and bodily injury. In satisfying the insurance requirement set forth in this Section, District may self-insure against such risks in such amounts as are consistent with good utility practice. Upon request, the District shall provide the City with sufficient written evidence, as determined by the City in its reasonable discretion, that such insurance (or self-insurance) is being so maintained by District. Such written evidence shall include, to the extent available from District's insurance carrier, a written certificate of insurance with respect to any insurance maintained by District in compliance with this Section.

SECTION 18. - *Abandonment and/or Removal of District Facilities.* The Parties agree that the standard practice will be to abandon

underground District Facilities in-place whenever practical, subject to the following conditions:

(1) The District shall continue to own and be responsible for any such facilities abandoned within the Franchise Area.

(2) The City shall have the right to require the District to remove any Facilities abandoned within the Franchise Area if the City reasonably determines the removal of the abandoned Facility is required to facilitate the construction or installation of a City project within the Franchise Area and the City determines there is no other reasonable or feasible alternative to the removal of the Facility. The City will make reasonable efforts to avoid conflicts with abandoned Facilities whenever possible, however, whenever a conflict cannot be resolved except by removal from the right-of-way of previously abandoned District Facilities, then the District shall, at the District's expense, remove such abandoned Facilities by their own forces or by participating in the City's public works project. When necessary, removal of abandoned Facilities shall be limited to the area of direct conflict. In removing such material, the District shall conform to all local, state, and federal regulations applicable to asbestos abatement, when applicable.

(3) Within ten working days (10) of the District's permanent cessation of use of any of its Facilities as determined by the District, or any portion thereof, the District shall provide the City with as-built record drawings showing the location of the Facilities to be abandoned. If the facilities to be abandoned include asbestos pipe, the District will, in good faith, use its best efforts to provide as-built drawings locating the asbestos pipe or, if unable to provide as-built drawings, will provide the most complete and accurate drawings the District can make available to provide adequate notice of the location of all abandoned asbestos pipe.

(4) District Facilities that are abandoned in-place shall be abandoned pursuant to City Standards, to the satisfaction of the Public Works Director.

(5) The Parties expressly agree that this section shall survive the expiration, revocation or termination of this Franchise, unless modified by separate agreement.

SECTION 19. - *Vacation of Franchise Area.* If the City determines to vacate any right-of-way which is part of the Franchise Area where District Facilities are located or maintained, any ordinance vacating such right-of-way shall provide and condition such vacation on the District obtaining, at no cost to the District, a permanent easement at least fifteen (15) feet wide in such vacated right-of-way for the construction, operation, maintenance, repair and replacement of its Facilities located and to be located in such vacated right-of-way.

SECTION 20. *Assignment.* All of the provisions, conditions, and requirements herein contained shall be binding upon the District, and no right, privilege, license or authorization granted to the District hereunder may be assigned or otherwise transferred without the prior written authorization and approval of the City, which the City may not unreasonably withhold, condition or delay, provided that a merger or consolidation of District with or into another Title 57 water-sewer district shall not be considered an assignment for the purposes of this provision and shall not be subject to the City's approval.

SECTION 21. - *Notice.* Unless applicable law requires a different method of giving notice, any and all notices, demands or other communications required or desired to be given hereunder by any Party

(collectively, "notices") shall be in writing and shall be validly given or made to another Party if delivered either personally or by Federal Express or other overnight delivery service of recognized standing, or if deposited in the United States Mail, certified, registered, or express mail with postage prepaid, or if sent by e-mail with electronic confirmation. If such notice is personally delivered, it shall be conclusively deemed given at the time of such delivery. If such notice is delivered by Federal Express or other overnight delivery service of recognized standing, it shall be deemed given one (1) business day after the deposit thereof with such delivery service. If such notice is mailed as provided herein, such shall be deemed given three (3) business days after the deposit thereof in the United States Mail. If such notice is sent by email, it shall be deemed given at the time of the sender's receipt of electronic confirmation. Each such notice shall be deemed given only if properly addressed to the Party to whom such notice is to be given as follows:

To City:

City Clerk
City of Kent
220 Fourth Avenue South
Kent, WA 98032
Phone: (253) 856-5725
Fax: (253) 856-6725

To District :

General Manager
King County Water District No. 111
27224 144th S.E.
Kent, WA 98042
Phone: (253) 631-3770
Fax: (253) 631-8072

Any Party may change its address for the purpose of receiving notices as herein provided by a written notice given in the manner required by this Section to the other Party.

SECTION 22. - *Non-Waiver.* The failure of either Party to enforce any breach or violation by the other Party or any provision of this Franchise shall not be deemed to be a waiver or a continuing waiver by the non-breaching Party of any subsequent breach or violation of the same or any other provision of this Franchise.

SECTION 23. - *Alternate Dispute Resolution.* If the Parties are unable to resolve disputes arising from the terms of this Franchise, prior to resorting to a court of competent jurisdiction, the Parties shall submit the dispute to mediation or other non-binding alternate dispute resolution process agreed to by the Parties. Unless otherwise agreed upon between the Parties or determined herein, the cost of that process shall be shared equally by the Parties.

SECTION 24. - *Governing Law/Venue.* This Franchise shall be governed by the laws of the State of Washington. Any suit to enforce or relating to this Agreement shall only be filed in King County Superior Court, King County, Washington.

SECTION 25. - *Entire Agreement.* This Franchise constitutes the entire understanding and agreement between the parties as to the subject matter herein and no other agreements or understandings, written or otherwise, shall be binding upon the parties upon execution and acceptance hereof. This Franchise shall supersede, rescind and cancel any prior franchise granted by the City to the District, including such franchise granted by City Ordinance No. 3447.

SECTION 26. - *Amendment.* This Franchise may be amended only by written instrument, signed by both Parties, which specifically states that it is an amendment to this Franchise, and is approved and executed in accordance with the laws of the State of Washington. Without limiting the

generality of the foregoing, this Franchise (including, without limitation, Section 7 "Indemnification" above) shall govern and supersede and shall not be changed, modified, deleted, added to, supplemented or otherwise amended by any permit, approval, license, agreement or other document required by or obtained from the City in conjunction with the exercise (or failure to exercise) by District of any and all rights, benefits, privileges, obligations, or duties in and under this Franchise, unless such permit, approval, license, agreement or document specifically:

(1) References this Franchise; and

(2) States that it supersedes this Franchise to the extent it contains terms and conditions which change, modify, delete, add to, supplement or otherwise amend the terms and conditions of this Franchise.

In the event of any conflict or inconsistency between the provisions of this Franchise and the provisions of any such permit, approval, license, agreement or other document that does not comply with Subsections (1) and (2) referenced immediately above, the provisions of this Franchise shall control.

SECTION 27. - *Directions to City Clerk.* The City Clerk is hereby authorized and directed to forward certified copies of this ordinance to the District as set forth in this ordinance. The District shall have thirty (30) days from the receipt of the certified copy of this ordinance to accept in writing the terms of the Franchise granted to the District by this ordinance and file with the City Clerk the executed statement of Acceptance of Franchise, attached hereto as Exhibit "A" and incorporated herein by this reference.

SECTION 28. - *District Acceptance of Franchise.* District shall have no rights under this Franchise nor shall District be bound by the terms and conditions of this Franchise unless District shall, within thirty (30) days after the effective date of the ordinance, file with the City its written acceptance of this Franchise.

SECTION 29. - *Effective Date of Franchise.* The terms and conditions of this ordinance shall not be binding on the City and the District unless the District Board of Commissioners within thirty (30) days of the effective date of this ordinance adopts a resolution accepting this Franchise, and the date of the adoption of such resolution by the District Board of Commissioners shall be the effective date ("Effective Date") of the Franchise.

SECTION 30. – *Severability.* If any one or more section, subsection, or sentence of this franchise is held to be unconstitutional or invalid, such decision shall not affect the validity of the remaining portion of this franchise and the same shall remain in full force and effect.

SECTION 31. – *Corrections by City Clerk or Code Reviser.* Upon approval of the city attorney, the city clerk and the code reviser are authorized to make necessary corrections to this ordinance, including the correction of clerical errors; ordinance, section, or subsection numbering; or references to other local, state, or federal laws, codes, rules, or regulations.

SECTION 32. - *Effective Date of Ordinance.* This ordinance shall take effect and be in force five (5) days after its publication, as provided by law.

Suzette Cooke

SUZETTE COOKE, MAYOR

ATTEST:

Kimberley A. Komoto

KIMBERLEY A. KOMOTO CITY CLERK

APPROVED AS TO FORM:

Tom Brubaker

TOM BRUBAKER, CITY ATTORNEY

PASSED: 4th day of April, 2017.

APPROVED: 4th day of April, 2017.

PUBLISHED: 7th day of April, 2017.

I hereby certify that this is a true copy of Ordinance No. 4241 passed by the City Council of the City of Kent, Washington, and approved by the Mayor of the City of Kent as hereon indicated.

Kimberley A. Komoto (SEAL)
KIMBERLEY A. KOMOTO, CITY CLERK

ACCEPTANCE OF FRANCHISE

The undersigned authorized representative of King County Water District No. 111 (District) hereby declares on the District's behalf the District's acceptance of the nonexclusive franchise to King County Water District No. 111 approved by the City of Kent City Council on APRIL, 4TH, 2017, by the adoption of City of Kent Ordinance No. 4241

DATED this 9TH day of MAY, 2017.

King County Water District No. 111

By: William C. Hall
Its: _____

WATER SERVICE AREA
BOUNDARY ADJUSTMENT AGREEMENT

This Water Service Area Boundary Adjustment Agreement ("Agreement") is between the City of Kent, a Washington municipal corporation ("City"), and Lake Meridian Water District, a Washington special purpose municipal corporation ("District").

Recitals

A. The City and the District own and operate water systems and provide retail water utility services to customers located within their respective corporate and approved utility service area boundaries. Portions of the District's and the City's water service area boundaries are adjacent.

B. The City's and the District's exclusive water service area boundaries have been established and approved pursuant to Chapter 70.116 RCW, the Public Water System Coordination Act of 1977 ("Act"). In accordance with the South King County Coordinated Water System Plan prepared pursuant to the Act, the City and the District have been designated the exclusive water service purveyors within their respective authorized water service areas. The City's and District's retail water service area boundaries have also been established and approved pursuant to water system plans approved by the Washington State Department of Health (DOH), King County, and other public agencies with jurisdiction. The water system plans designate the City and the District as the exclusive water service purveyors within their respective authorized retail water service areas.

C. The City acquired three parcels within the District's service area in 1999 for the purpose of building a maintenance and operations center ("KEHOC") for its Public Works and Parks Departments. Since the time of acquisition, the City has continued to make investments to support KEHOC. These improvements included the construction of a 4 Million Gallon Water Reservoir in 2011 and an accompanying 20-inch diameter distribution main. The City has an interest in incorporating KEHOC into its service area, so that it would lie entirely within the City's exclusive retail water service area, so long as the City retains ownership of these parcels.

D. Clark Lake Park is a passive recreational facility owned by the City. Approximately one-third of the park acreage currently lies within the City's exclusive water service area, and the other two-thirds of the park acreage lie within the District's exclusive water service area. The City owns an existing 20-inch diameter water main within SE 248th Street, which runs along the southern border of Clark Lake Park. Because of this existing infrastructure, it is in the City's interest to serve the entirety of Clark Lake Park.

DRAFT

E. The Ruth family currently owns three parcels of land northeast of the intersection of SE 248th Street and 124th Avenue SE ("Ruth Property"). The Ruth Property is surrounded by Clark Lake Park and currently lies within the District's exclusive water service area. Because of the City's existing infrastructure within SE 248th Street and the incorporation of Clark Lake Park into the City's exclusive water service area, it is also within the City's interest to incorporate the Ruth Property into its service area.

F. In 2017, the District and the City entered into a franchise agreement ("Franchise") authorizing the use of the City's rights-of-way for the installation and maintenance of the District's facilities. As part of the Franchise, the District agreed to pay to the City a franchise fee in the amount of 6% of the District's revenue. The Franchise has a term of 10 years, with an additional automatic extension of 5 years. In exchange for allowing the City to serve KEHOC and Clark Lake Park and altering the City's and the District's water service areas accordingly, the term of the Franchise term will be extended as set forth in this Agreement and a separate amendment to the Franchise.

The Parties therefore agree as follows.

Agreement

1. Water Service Area Boundary Adjustment. The Parties hereby agree to adjust the water service area boundary between the City and the District so that all the property as set forth in this Section 1 and legally described in Exhibit A will be added to and lie entirely within the City's exclusive retail water service area as of the Effective Date of this Agreement. A depiction showing the adjusted and modified exclusive retail water service area boundaries between the Parties is attached for illustrative purposes as part of Exhibit A~~B~~.

1.1 KEHOC Site. This Agreement adds the three City-owned parcels planned to be used to build the City's Kent East Hill Operations Center ("KEHOC") to the City's exclusive retail water service area: 2122059132; 2122059140; and 2122059147.~~.~~ If, at any time after the Effective Date of this Agreement, the City conveys its ownership interest in the KEHOC site to another party, the City shall pay the District one-half of the water system development charges ("SDC") collected pursuant to Kent City Code 7.02.090(C). The City shall tender payment of the SDC to the District within sixty (60) calendar days from the date the City receives payment.

1.2 Clark Lake Park. This Agreement adds the remaining portion of the assemblage of parcels owned by the City comprising Clark Lake Park to the City's exclusive retail water service area ("New Clark Lake Service Area"). Previously, roughly one-third of the Park's acreage was included within the City's exclusive water service area. If, at any time after the Effective Date of

this Agreement, the City constructs new improvements on the New Clark Lake Service Area or conveys its ownership interest in the New Clark Lake Service Area to another party, then the City shall pay the District one-half of the SDC collected. The City shall tender payment of the SDC to the District within sixty (60) calendar days from the date the City receives payment.

1.3 Ruth Property. This Agreement adds the following three parcels surrounded by Clark Lake Park to the City's exclusive retail water service area: parcel numbers 2122059037; 2122059098; and 2122059097 ("Ruth Property"). In consideration of this adjustment to the City's water service area, the City will pay the District one-half of any SDC collected by the City related to any development on the Ruth Property. The City shall tender payment of the SDC to the District within sixty (60) calendar days from the date the City receives payment.

2. Consideration. In addition to other consideration set forth in this Agreement, the City agrees to amend the Franchise the parties entered into in 2017 to extend its term. The parties agree that the franchise term section will be amended to extend the term to 20 years from the effective date of the franchise amendment, with an automatic extension of one additional five-year period. The amendment of the Franchise will take place in a separate agreement and must be separately approved by the Kent City Council and accepted by the District.

3. Planning Documents, Other Approvals, and Governmental Notifications. The Parties agree to amend their respective water system plans and any other required planning or permitting documents during the next update of said documents to include the adjusted exclusive water service area boundary between the Parties as provided for in this Agreement. Both Parties shall provide any required government notifications, including without limitation, notifications to DOH and the King County Boundary Review Board. However, failure to make those amendments, failure to obtain any required plan approvals involving the service area adjustment, or failure to provide required notifications will not affect the contractual obligations between the Parties as provided for in this Agreement.

4. Miscellaneous.

4.1 Duration. This Agreement will remain in effect as a permanent water service area boundary change between the Parties.

4.2 Indemnification. The City will defend, indemnify and hold the District, its officers, officials, employees, agents and volunteers harmless from any and all claims, injuries, damages, losses or suits, including all legal costs and attorney fees, arising out of or in connection with the City's negligent performance of this Agreement.

The District will defend, indemnify and hold the City, its officers, officials, employees, agents and volunteers harmless from any and all claims, injuries, damages, losses or suits, including all legal costs and attorney fees, arising out of or in connection with the District's negligent performance of this Agreement.

4.3 Non-Waiver of Breach. Either Party's failure to insist upon strict performance of any of the covenants and agreements contained in this Agreement or to exercise any option conferred by this Agreement in one or more instances will not be construed to be a waiver or relinquishment of those covenants, agreements or options.

4.4 Governing Law, Resolution of Disputes and Legal Costs. Washington law will govern this Agreement. If the Parties are unable to settle any dispute, difference or claim arising from this Agreement, the exclusive means of resolving that dispute, difference or claim, will only be by filing suit exclusively under the venue, rules and jurisdiction of the King County Superior Court, King County, Washington, unless the Parties agree in writing to an alternative dispute resolution process. In any claim or lawsuit for damages arising from the Parties' performance of this Agreement, each Party will pay all its legal costs and attorney fees incurred in defending or bringing that claim or lawsuit, including all appeals, in addition to any other recovery or award provided by law; provided, however, nothing in this paragraph will be construed to limit either Party's right to indemnification under subsection 4.2.

4.5 Assignment or Modification. Assignment, waiver, alteration, or modification of all or part of this Agreement will not be binding on the Parties unless in writing and signed by a duly authorized representative of each Party.

4.6 Entire Agreement. The written provisions and terms of this Agreement supersede all prior verbal statements of any officers or other representatives, and those statements will not be construed as part of this agreement.

4.7 Counterparts. This Agreement may be executed in one or more counterparts, each of which shall constitute an original, and all of which together will constitute one agreement.

4.8 Authority. The Parties represent and warrant this Agreement has been duly approved and authorized by their respective legislative authorities, that each Party has fully power and authority to enter into this Agreement and to carry out the actions required of them in this Agreement, and all person signing this Agreement in a representative capacity represent and warrant they have the full power and authority to bind their respective municipal entities.

DRAFT

5. Effective Date. This Agreement will take effect on the last date entered below ("Effective Date").

The City of Kent	**Lake Meridian Water District**
_____	_____
By_____	By_____
Its_____	Its_____
Date:_____	Date:_____

DRAFT

EXHIBIT A

LEGAL DESCRIPTION OF KEHOC, CLARK LAKE PARK AND THE RUTH PROPERTY

DRAFT

EXHIBIT A

DEPICTION OF KEHOC, CLARK LAKE PARK, AND THE RUTH PROPERTY

DRAFT

EXHIBIT __

THAT PORTION OF THE LAKE MERIDIAN WATER DISTRICT FRANCHISE LYING WITHIN SECTION 21, TOWNSHIP 22 NORTH, RANGE 5 EAST, WILLAMETTE MERIDIAN, IN KING COUNTY, WASHINGTON, AS DESCRIBED IN CITY OF KENT ORDINANCE 3447 UNDER KING COUNTY RECORDING NUMBER 19991012000148 SHALL BE RELOCATED TO INCLUDE THE LANDS LYING EASTERLY OF THE FOLLOWING DESCRIBED LINE;

BEGINNING AT THE INTERSECTION OF THE WEST MARGIN OF 124TH AVENUE SOUTHEAST AND THE NORTH LINE OF THE SOUTH 330 OF THE NORTHEAST QUARTER OF THE SOUTHWEST QUARTER AND THE NORTHWEST QUARTER OF THE SOUTHEAST QUARTER OF SAID SECTION 21; THENCE EASTERLY, ALONG SAID NORTH LINE TO THE WEST LINE OF THE EAST 280 OF THE WEST 940 OF SAID NORTHWEST QUARTER; THENCE SOUTHERLY, ALONG SAID WEST LINE TO THE SOUTH LINE OF SAID NORTHWEST QUARTER; THENCE EASTERLY, ALONG SAID SOUTH LINE TO THE EAST LINE OF SAID WEST 940; THENCE NORTHERLY, ALONG SAID WEST 940 AND THE EXTENSION THEREOF, TO THE NORTH MARGIN OF SOUTH 248TH STREET; THENCE EASTERLY, ALONG SAID NORTH MARGIN TO THE EAST LINE OF THE WEST HALF OF THE NORTHEAST QUARTER OF SAID SECTION 21, THENCE NORTHERLY, ALONG SAID EAST LINE TO THE SOUTH MARGIN OF SOUTH 240TH STREET; THENCE WESTERLY, ALONG SAID SOUTH MARGIN TO THE WEST LINE OF THE EAST 495.00 FEET OF THE NORTHWEST QUARTER OF SAID SECTION 21, SAID POINT BEING ON THE WEST LINE OF THE EXISTING WATER DISTRICT 111 FRANCHISE LIMIT AND THE TERMINUS OF THE HEREIN DESCRIBED LINE.

6/28/2022

IMPORTANT:
THIS IS NOT A SURVEY. IT IS FURNISHED AS A CONVENIENCE TO LOCATE THE LAND INDICATED HEREON WITH REFERENCE TO STREETS AND OTHER LAND. NO LIABILITY IS ASSUMED BY REASON OF RELIANCE HEREON.

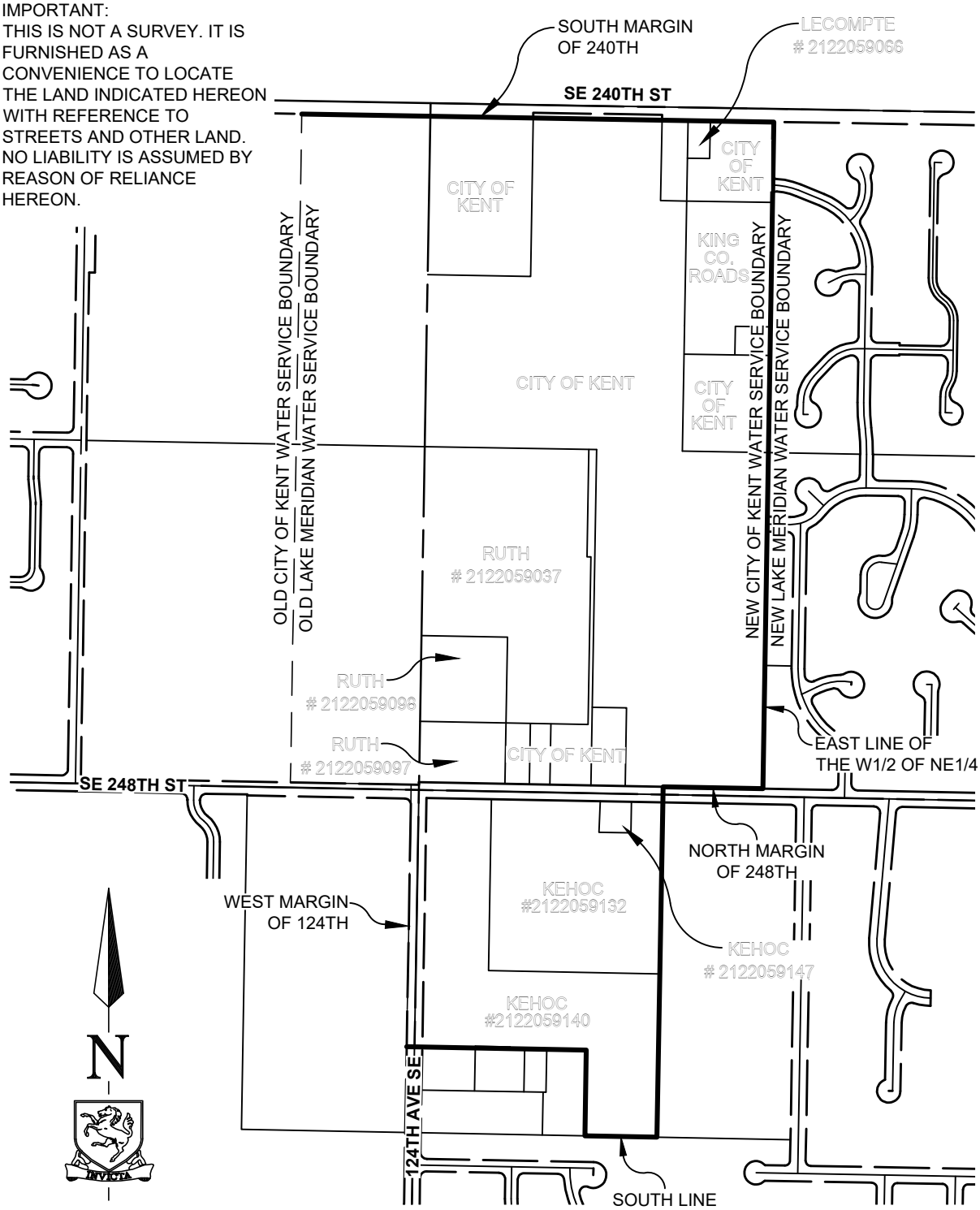

Project # WATER DISTRICT BOUNDARIES

PORTION OF THE NE 1/4 AND THE SE 1/4 OF SEC 21, TOWNSHIP 22 N, RANGE 5 E, W.M.	KENT WASHINGTON CITY OF KENT LAND SURVEY SECTION	**LAKE MERIDIAN WATER DISTRICT BOUNDARY ADJUSTMENT** **DRAWN BY:** GM **SCALE:** 1"=600' **DATE:** 06/28/2022 **EXHIBIT**

JURISDICTION DIVIDER

City of Tacoma

WHOLESALE WATER AGREEMENT

BETWEEN CITY OF TACOMA

AND WATER DISTRICT NO.111 OF KING COUNTY

This agreement is made by and between the City of Tacoma, Department of Public Utilities, Water Division (dba Tacoma Water) a municipal corporation (hereafter "Tacoma"), and Water District No.111 of King County (hereafter "Water District No.111"), or collectively referred to as "the Parties", Witnesseth:

A. RECITALS:

WHEREAS, Tacoma has evaluated its wholesale projections in its demand forecast and has determined that adequate surplus water resources are available to serve those projected demands; and

WHEREAS, the parties are responsible for operating and maintaining their respective public water systems in accordance with federal, state and local laws and regulations, and

WHEREAS, the parties further recognize that water resources are finite and valuable, and the prudent use and management of these resources requires co-operation among water utilities, and

WHEREAS, Water District No.111 has requested and Tacoma has agreed to provide wholesale water to Water District No.111, and Tacoma is able and willing to provide the requested quantity of water on the terms and conditions as herein provided, now therefore, for and in consideration of the mutual covenants, conditions and payments to be made as set forth herein, the Parties hereto agree as follows:

B. DEFINITIONS:

The meaning of certain words or terms, when used in this agreement, is as follows:

Wholesale Service Connection: means a physical connection between water mains of the parties to this agreement, at a specifically identified point or points, where water may be transferred from one party's system to the transmission or distribution facilities of the other.

Isolation Valve: means a positive shut off valve, which shall be installed at the point in each water system, which is used to accept or deliver water through the wholesale service connection. The isolation valve is defined as part of the system connected to the wholesale service connection and not part of the wholesale

service connection. Each connected system has sole responsibility for providing and operating their isolation valve.

Wholesale Service Connection Capacity: means the maximum flow capacity for water to be delivered through a wholesale service connection as agreed upon by the parties to this agreement. Wholesale service connection facilities shall be designed so as to be capable of conveying no less than the maximum agreed upon flow.

SSP: means Tacoma's Second Supply Project that will bring water to the SSP Partners.

SSP Partners: means the City of Kent, Tacoma Water, Covington Water District and the Lakehaven Utility District.

Emergency: means an unforeseen event that causes damage or disrupts normal operations and requires immediate action to protect public health and safety including when water system repairs are necessary due to a water system failure or when there is a water supply shortfall.

TMC: means the Tacoma Municipal Code as adopted by the City Council for the City of Tacoma

C. GENERAL TERMS AND CONDITIONS: Tacoma agrees to provide Water District No.111 with certain wholesale water conditioned upon the following:

1. General. Tacoma agrees to furnish to Water District No.111 the requested quantity of water of a quality that will satisfy all requirements of the laws of the Federal Safe Drinking Water Act as amended, and in accordance with the terms and conditions of this agreement. The commencement date for providing wholesale water under this Agreement is January 2006.

2. System Development Charge. Based upon the water supply request information provided to Tacoma by Water District No.111 and in accordance with the formula specified in Section 12.10.310 (as amended) of the Tacoma Municipal Code (TMC), the full amount to be paid by Water District No.111 to Tacoma for Tacoma's System Development Charge ("SDC") totals Three Million ~~Three~~ Nine Hundred Ninety Nine Thousand and 100 Dollars ($3,999,100). As this Agreement was ready for approval in 2002, it is the intent of the Parties that the SDC amount be calculated based upon the rates in effect in 2002.

3. Down Payment. Water District No.111 agrees to provide to Tacoma a down payment of $2,000,000 towards the SDC total amount, which payment shall be made within thirty (30) days of the effective date of this Agreement.

4. Annual Payments. Water District No.111 agrees to make annual payments to Tacoma in the amount of ten percent (10%) of the original total SDC amount minus the down payment(e.g. $199,910) on or before January of each year beginning with January 2004.

5. Additional SDC. TMC Section 12.10.310 currently provides that the SDC shall be adjusted if the customer's usage exceeds 110 percent of the anticipated average day use during a 12-month period. Therefore, an additional SDC may be applicable in accordance with the Tacoma Municipal Code provisions in effect at the time of any requested increase in water supply. Provided however, an increase in water will only be approved by Tacoma if there is sufficient surplus water available, and subject to Tacoma's Public Utility Board approval.

6. Wholesale Water Rate. The wholesale water that Tacoma agrees to supply Water District No.111 pursuant to this Agreement shall be priced at the wholesale water service rate as identified in TMC Section 12.10.400, of the City of Tacoma Water Rates and Regulations (as may be amended). The water rates are periodically adjusted and shall be applicable as set forth in the rate schedule as adopted by the Public Utility Board and Tacoma City Council.

7. Water Service Request. Water District No.111 shall make payment to Tacoma for all water services and charges within 24 days of the invoice date. Late payment charges are applicable pursuant to TMC Chapter 12.01, and are currently one percent per month on the unpaid balance. In the event of non-payment for water services or the SDC, after providing notice and a reasonable opportunity to cure, Tacoma is entitled to terminate water service to Water District No.111. Provided however, in the event that there is a dispute over an invoice or a portion of an invoice, if Water District No.111 pays the undisputed portion of the invoice, Tacoma agrees not to terminate service until the disputed matter can be resolved by mutual agreement, or resolved by arbitration.

8. Interest. Water District No.111 shall pay interest calculated on an annual basis on the outstanding balance of the total SDC amount (set forth herein) at "prime" interest rate less 2%, as reported by the Wall Street Journal ten days before the date interest payment is due and payable. The total interest amount required to be paid by Water District No.111 for each calendar year beginning with year 2003, shall be paid along with the annual payment that shall be paid (to Tacoma) beginning January 5, 2004 and each January 5th thereafter until the entire total SDC amount plus interest is paid in full.

9. New Connections. The Wholesale Service Connection described herein and shown by Appendix A, attached to this Agreement shall be governed by the terms of this Agreement. No additional future Wholesale Service Connections shall be permissible without a subsequent and separate written agreement between the Parties, which agreement may supplement this Agreement. Neither Party shall be obligated to agree to or execute any agreement or permit with the other Party to construct additional Wholesale Service Connection(s). The cost for materials, design and installation of any new Wholesale Service Connections between the two systems, including pipe, meter(s), appurtenances and vaults is the responsibility of Water District No.111. Tacoma is responsible for the design, construction, repair and maintenance of the facilities up to Water District No.111's Isolation Valve, and except for the future meter and vault repair and maintenance cost, the cost for such design and construction is the responsibility of Water District No.111. Tacoma, in consultation with Water District No.111, will coordinate the design and construction of the Wholesale Service Connection.

10. Water Quantity Reserved. On the effective date of this Agreement, Tacoma agrees to reserve for future delivery to Water District No.111, 1,200,000 gallons per day (gpd) of water for average day use, 1,400,000 gpd for peak day use and 1,330,000 gpd for four-day average peak use. Tacoma's obligation to deliver the reserved water supply to Water District No.111 shall arise and be a continuing obligation beginning immediately after Tacoma receives the SDC payment for the certain incremental amount of the reserved water requested by Water District No.111. If Water District No.111 fails to satisfy the SDC payment schedule set forth herein, either through annual payments and/or prepayment for water delivered, then Tacoma may, as Tacoma's exclusive remedy for such failure, reduce the amount of water held in reserve for Water District No.111 to the volume for which SDC payments have been received by Tacoma according to the schedule. Reduction of the amount of water held in reserve for Water District No.111 shall not relieve Water District No.111 of its obligation to pay interest on the SDC prior to the time of reduction in the amount of water held in reserve (which will have the effect of reducing the SDC proportionately) or relieve Water District No.111 of its obligation to pay interest in the future on the revised remaining balance of the SDC.

11. Additional Water. Water District No.111 may purchase water on a short term basis from Tacoma in excess of the reserved amount in paragraph ~~11~~ 10 above, if in Tacoma's sole discretion sufficient surplus water is available. Water District No.111 shall be entitled to purchase such water in accordance with the terms of this Agreement at the then current wholesale rate.

12. Additional Facilities. Water District No.111 is responsible for costs related to maintaining any additional equipment such as pumps, buildings and other appurtenances downstream of the meter. In addition, any capital costs related to these facilities and equipment is Water District No.111's responsibility.

13. Transferability. Subject to the other respective Party's approval, which shall not be unreasonably denied, either Party may transfer or assign the rights and obligations of this Agreement to its successors and assigns.

14. Reliability. Tacoma agrees to supply wholesale water pursuant to this Agreement with the same degree of reliability and certainty of supply as water provided by Tacoma to its existing customers.

15. Conservation. As a requirement of wholesale service Water District No.111 commits to a water conservation and water curtailment program substantially equivalent to Tacoma's programs. If during a period of serious water shortage Tacoma's Superintendent publicly announces that its customers must comply with certain conservation and/or curtailment requirements, then Water District No.111 likewise must require all of its customers to satisfy substantially similar requirements. If requested, Tacoma will invite Water District No.111 to participate in the planning and implementation process for conservation programs as they are developed, and will share available conservation resources where beneficial to both parties. In the event that a major water shortage occurs and Water District No.111 fails to abide by the conservation and/or curtailment requirements as publicly announced by Tacoma, then Tacoma will allow a reasonable opportunity for Water District No.111 to address the problem. If thereafter Water District No.111 fails to abide by the publicly announced requirements, then Tacoma may terminate water supplied under this Agreement until such time as Water District No.111 agrees to abide by such requirements.

16. Emergency. Water District No.111 acknowledges that during an emergency situation or a planned outage Tacoma may temporarily be unable to meet all or part of its wholesale service commitment. If Tacoma has a planned outage Tacoma commits to give Water District No.111 a minimum of 7 (seven) days advance notice. Tacoma and Water District No.111 will work together to identify mutually acceptable dates for planned outages. It is understood and agreed that when circumstances identified in this section or the Force Majure section occur, and assuming Tacoma exercises good faith efforts to resolve the problem and re-establish water service to Water District No. 111 as soon as practicable, then Tacoma shall not be held to be liable for monetary damages that may arise due to the water service outage or extension of the outage.

17. Resale. Water provided under this Agreement may be resold to another water purveyor.

18. Mutual Aid. Tacoma and Water District No.111 agree to the sharing of resources during times of extraordinary need and emergency operations.

19. Term. This agreement shall remain in effect so long as Tacoma remains in the business of providing water and so long as Water District No.111 meets the terms and conditions of this Agreement.

20. Dispute Resolution. In the event of a disagreement over any aspect of this Agreement, except as herein further provided, it is agreed that such dispute shall be submitted to binding arbitration pursuant to Chapter 7.04 RCW. The Parties shall agree upon who will arbitrate the dispute, and upon failure to reach agreement within a reasonable period of time, the presiding judge of the Pierce County Superior Court may be asked to appoint an arbitrator from one of the recognized dispute resolution services. The Party that substantially prevails in the arbitration proceeding shall be awarded its reasonable attorney fees and costs.

21. Notice. All notices, requests, demands and other communications hereunder shall be in writing and shall be deemed given if personally delivered or mailed, certified mail, return receipt requested, or sent by overnight carrier to the following addresses:

If to Tacoma:	If to Water District No.111:
Water Superintendent	General Manager
Tacoma Water	Water District No.111
P.O. Box 11007	27224 144th S.E.
Tacoma, WA 98411	Kent, WA 98042
Phone: 253 502-8206	Phone: 253-631-3770
Fax: 253 502-8694	Fax: 253-631-8072

22. Force Majure. Uncontrollable forces or state or federal Law changes may occur during the time this Agreement is in place. Neither of the Parties hereto shall be considered to be in default in respect to any obligations hereunder if prevented from fulfilling such obligations by reason of uncontrollable forces or material changes in state or federal law or enforcement thereof. Parties rendered unable to fulfill any obligation hereunder by reason of an uncontrollable force or material change in state or federal law shall exercise due diligence to deal with such uncontrollable force with all reasonable dispatch and to take actions consistent with the purpose of this Agreement.

23. Independent Parties. This Agreement describes the entire relationship of the Parties with regard to the subject matter herein concerned. Except as maybe explicitly provided otherwise herein, the Parties are independent agencies and shall not be deemed to be partners, joint ventures, principals, or agents of each other for any purpose whatsoever. Each party shall have and maintain sole and complete control over all of its employees, agents and operations. Except as may otherwise be explicitly provided herein, or in separate agreement, each and all of the obligations, responsibilities, and liabilities of the Parties under and in connection with this Agreement are several, and not joint, and no separate legal or administrative entity will be created to fulfill the purposes of this Agreement.

24. No Third Party Beneficiaries. Except as expressly set forth in this Agreement, none of the provisions of this Agreement shall inure to the benefit or be enforceable by any third party.

25. Invalidity. The invalidity or unenforceability of any provision of this Agreement shall not affect the other provisions hereof, and this Agreement shall be construed in all respects as if such invalid or unenforceable provisions were omitted.

26. Amendments. No change, amendment or modification of any provision of this Agreement shall be valid unless set forth in a written amendment to this Agreement signed by all parties.

27. Authority to Bind. Each of the parties signing this agreement certifies that they have authority to bind their respective governing bodies to all of the terms and conditions of the agreement herein. Notwithstanding the foregoing, the signature of the City Water Superintendent is subject to the approval of the City of Tacoma Public Utility Board.

IN WITNESS WHEREOF, the following parties have duly executed this agreement and subject to the provisions above, it shall be deemed to be effective on 30 December 2002.

City of Tacoma
Department of Public Utilities
Water Division

By: Kenneth J. Merry
Title: WATER SUPERINTENDENT

Water District No.111
of King County

By: Charles E. Wilson Jr.
Title: President, Board of Commissioners

Approved as to form & legality:
Mark Bubnik

WATER RATES AND REGULATIONS FOR THE SUPPLY AND USE OF WATER

Established by the
PUBLIC UTILITY BOARD
and CITY COUNCIL
of the
CITY OF TACOMA

Department of Public Utilities
Water Division

City Ordinance No. 27024
Effective
January 1, 2003

TABLE OF CONTENTS

		Page No.
12.10.130	Termination of Service	1
12.10.200	Private Contract Charges	2
12.10.250	Water Service Connection Construction Charges	3
12.10 300	Fire Hydrant Installations and Relocations	5
12.10.305	Fire Hydrant Use (Non-Fire fighting)	6
12.10.310	System Development Charges (SDC)	9
12.10.400	Rates -- Inside and Outside City Limits.	15

A. Residential Service
B. Commercial and Industrial - General Service
C. Commercial and Industrial ,Large Volume Service
D. Parks and Irrigation Service
E. Public Facilities Service
F. Wholesale Service
G. Emergency Intertie Service
H. Fire Protection Service
I. Special Contracts
J. Simpson Tacoma Kraft Company Contract
K. Low-Income/Elderly and/or Low-Income/ Handicapped Residential Service
L. Water System Acquisition

Req. #9335

ORDINANCE NO. 27024

AN ORDINANCE relating to water regulations and rates; and amending Chapter 12.10 of the Tacoma Municipal Code by amending Sections 12.10.130, 12.10.200, 12.10.250, and 12.10.300 thereof; by adding thereto a new section, to be known and designated as Section 12.10.305; by amending Sections 12.10.310, and 12.10.400 thereof; and providing for an effective date of January 1, 2003.

BE IT ORDAINED BY THE CITY OF TACOMA:

Section 1. That Section 12.10.130 of the Tacoma Municipal Code is hereby amended to read as follows:

12.10.130 Termination of service. Delinquency and nonpayment of one or more water service charges or customer-caused damage to the water meter and appurtenances shall be sufficient cause for termination of service by turning off the water service or reducing the flow of water to the premises. Water service shall not be turned on again until all costs incurred by the Water Division, plus charges and penalties are paid, or satisfactory arrangements for payment of delinquent charges and penalties has been made with the Division.

Upon discovery of fraud, water service shall be terminated immediately and shall not be restored until the matter is resolved satisfactory to the Superintendent, or his or her designee.

All charges for water or water service shall be the personal obligation of the customer applying for or signing for and/or receiving such service and, in addition thereto, the City shall have all the lien rights granted by state laws against the premises where such service is furnished. The Superintendent shall have the absolute authority, except as limited by said state laws, to refuse to furnish service

to, to discontinue service to, or to refuse to resume service to any applicant or customer on account of the failure to pay delinquent bills owing the City by such person, whether such bills cover service at the premises sought to be served or other locations.

In addition to the other authority in this chapter (or other laws) to discontinue water service or reduce flow to a customer, the Superintendent, or his or her designee, is hereby authorized to discontinue or reduce flow to a customer's premises when the customer fails to make a cash deposit or meet one of the authorized deposit waiver options with the City Treasurer as approved by Utility Board resolution.

Except as set forth in Sections 12.10.130 and 12.10.150, termination of water service to a premises shall not occur until:

1. The City has provided the customer reasonable notice of the intent to terminate water service; and

2. The customer has been offered the opportunity of a hearing before a hearing officer.

Reasonable notice may be accomplished by mailing such notice to the customer using the United States Postal Service.

Section 2. That Section 12.10.200 of the Tacoma Municipal Code is hereby amended to read as follows:

12.10.200 Private contract charges. Extension of a permanent water main may be constructed by private contract. The developer of the privately financed project will be responsible for all costs and expenses incurred by the

Division for preparation of plans and specifications, construction inspection, testing, flushing, sampling of the mains, and other related work necessary to complete the new water main construction to Division standards and specifications. The engineering charge for the preparation of plans and specifications will be estimated by the Division. The developer will be required to pay a deposit in the amount of the estimated cost. The actual costs for the work will be billed against the developer's deposit. Should the actual costs for engineering the project exceed the deposit amount, the developer will be required to pay the balance prior to proceeding with water main construction. Prior to construction, a second deposit in the estimated amount for construction inspection, testing, and sampling will be due to the Water Division. Upon completion of the project, the developer will either be refunded the unused amount of the deposit or billed for the cost overrun. Above and beyond the deposits described above, $50 per fire hydrant in the project will be collected along with any applicable permit fees. Permit fees must be paid together with the engineering charge. The hydrant fee is due prior to construction.

Section 3. That Section 12.10.250 of the Tacoma Municipal Code is hereby amended to read as follows:

12.10.250 Water service construction charges. All water service installations shall be constructed by the Division. For all service installations, the owner or applicant shall pay in advance the fixed charge or a deposit in an amount of the Division's estimate of cost for the construction work. The cost charged for work performed on an estimated basis shall not exceed the estimated cost. If the

actual cost is less than the estimated cost, the customer will be refunded the difference. Beginning January 1, 2004, the cap on estimated charge work will be removed and the customer shall pay the total actual cost.

All required city, county, state, and/or other permits and fees are in addition to the charges listed below.

A. Water service construction charges on existing mains shall be as set forth below.

	Effective 4/23/01
3/4" Service & 5/8" Meter	$2,000
3/4" Service & 3/4" Meter	$2,050
1" Service & 5/8" Meter	$2,150
1" Service & 3/4" Meter	$2,200
1" Service & 1" Meter	$2,300

Service construction charges for services larger than 1" will be estimated based upon actual costs to the Division, including overhead and taxes. Service construction charges for water meters 3-inches and larger will include the cost of installation of Automated Meter Reading (AMR) equipment.

Multiple Services in Common Trench: When two or more residential services are installed on existing mains in a single excavation, the customer, as approved by the Division, will receive a $500 reduction in the water service construction charge for each service beyond the first.

All services and meters applied for shall be installed within two years of the application. Those customers who have not requested their water service and meter be installed within the two-year period will be required to pay the difference in the current charge and the charge paid at time of application, including the

system development charge (SDC).

Where a service stub was previously installed at the option of the Division, activation of that service shall require payment of all current fees and charges in effect at the time of application for service.

B. Three-quarter inch Services and 5/8" Meters on New Mains. There are two fee options available for 3/4" services and 5/8" meters installed on new mains. The developer must choose one option, which will apply to all services purchased for each project.

Option #1	**Effective 4/23/01**
Service stubs installed after samples and pressure tests.	$400/service
Meter yoke and box installed when requested by builder.	$400/meter plus the SDC
Option #2	
Service stubs installed after samples and pressure tests. Yokes and boxes installed after paving and curbs.	Initial charge is $650/service*
Meter installed when requested by builder.	$123/meter plus the SDC

Section 4. That Section 12.10.300 of the Tacoma Municipal Code is hereby amended to read as follows:

12.10.300 Fire hydrant installation and relocation.

Fire hydrant installation and relocation shall be performed by the Division at the customer's expense. A deposit shall be paid to the Division in the amount of the Division's estimate of the cost to install or relocate a fire hydrant. The cost to the customer will not exceed the estimated cost. If the actual cost is less than the estimated cost, the customer will be refunded the difference. After January 1, 2004, estimated charge work will no longer be capped. Total actual costs shall be paid after January 1, 2004.

All costs to acquire the necessary City, county, state and/or other permits to

accomplish the installation or relocation are in addition to the above costs.

Section 5. That Chapter 12.08 of the Tacoma Municipal Code is hereby amended by the addition thereto of a new section, to be known and designated as Section 12.10.305, to read as follows:

12.10.305 Fire hydrant use (non-fire fighting). When water service is supplied by way of a fire hydrant, other than for fire fighting, the proposed use must be disclosed and a permit must be obtained from the Division authorizing the hydrant use. A charge for all costs associated with hydrant and water usage shall be collected by the Division. A fire hydrant meter or a water service and meter may be required under certain circumstances as determined by the Division.

The use of the Division's hydrant without a current permit, using a restricted hydrant or failing to conform to the Division's hydrant operating procedures will result in a penalty or $1,000 in addition to all other hydrant use charges. Refusal to pay the penalties and charges may be cause for the Division to refuse future service to the contractor and/or discontinue service to the benefited premises.

Persons using a fire hydrant will be responsible for all damages to Division facilities or other private facilities that may result from the use of said hydrant. If the person refuses to pay the cost for all damages associated with fire hydrant use, the Division may refuse future service to the contractor and/or discontinue water service to the benefited premises.

Applications for fire hydrant use for periods greater than six consecutive months for the purpose of supplying water to a business may require the business to purchase a new water service connection of adequate size to accommodate the

proposed water usage as determined by the Division. Water service construction charges shall be as specified in Sections 12.10.250 and 12.10.310.

Fire hydrant use permit charges will be as follows:

HYDRANT USE CATEGORY AND FEE SCHEDULE

Category	Fee
Category #1 **Fixed (Single) Site Construction Project	Charge One Time Permit Fee $60 Meter Deposit for Hydrant $800* Monthly Water Use Charge at the Inside/Outside Commercial Rate Plus the Ready to Serve Charge for a 2-Inch Meter Penalty for Unauthorized Use $1,000
*Deposit to be refunded by the Division after return of the meter and appurtenances. All costs for hydrant and/or meter repairs/replacement caused by improper operation or theft of said equipment shall be deducted from the deposit. Refund of deposit will be initiated after payment of closing/final water bill. Costs exceeding the deposit amount will be billed to customer. ** Subcontractor would be allowed to use same permit as general contractor provided subcontractor meets all cross connection requirements and name is disclosed at issuance of permit.	
Category #2 * Multiple-Site Hydrant Use (Approved Hydrant Locations)	Option of either: $60 per truck per month ** $600 per truck per year ** Penalty for Unauthorized Use $1,000
*Subcontractor would be allowed to use same permit as general contractor provided subcontractor meets all cross connection requirements and name disclosed at issuance of permit. **Both general and subcontractors are required to submit a monthly log sheet of estimated water consumption per truck.	
Category #3 Short Term (Minimal) Use	$20 per truck per day Penalty for Unauthorized Use $1,000

A Division-approved backflow protection assembly shall be installed by the person requesting the use of a fire hydrant. The assembly shall be accompanied by a current backflow assembly test report. The test report shall remain on the

site for the duration of the hydrant use.

Section 6. That Section 12.10.310 of the Tacoma Municipal Code is hereby amended to read as follows:

12.10.310 System development charge (SDC).

A. A system development charge (SDC) shall be levied for each new water service connection to the City water system and for a service upgrade requiring a larger meter and for any existing service with three-inch and larger meters that exceeds 150 percent of their highest maximum annual daily average water use. The SDC is a fee based on an equitable share of the cost of the existing water system, and certain future facilities necessary to accommodate projected growth. This fee is established pursuant to RCW 35.92.025, the City Charter, and this chapter. SDCs are considered contributions for or in aid to construction, and shall be accounted for accordingly. Customer water consumption amounts on and after May 9, 1999, the original effective date of Ordinance No. 26408, will be examined to determine whether additional SDC amount is owed to the Department.

B. For retail meters 5/8inch through two inches, the charge will be based on customer class and the size of the meter (except for multi-family). For meters larger than two inches, the SDC shall be determined based on the customer's anticipated water use as shown below:

Meter Size	Inside City Residential Charges		Inside City Commercial/Industrial Charges	
	Effective			
	1/1/03	1/1/04	1/1/03	1/1/04
5/8 inch	$1,443	$ 1,485	$1,928	$ 1,984
3/4 inch	2,166	2,229	2,894	2,978
1 inch	3,610	3,715	4,823	4,963
1-1/2 inch	7,218	7,427	9,647	9,927
2 inch	11,548	11,883	15,433	15,881
3 inch	Individually calculated based on consumption			
4 inch				
6 inch				
8 inch				
10 inch				
12 inch				

Meter Size	Outside City Residential Charges		Outside City Commercial/Industrial Charges	
	Effective			
	1/1/03	1/1/04	1/1/03	1/1/04
5/8 inch	$ 1,732	$ 1,782	$ 2,315	$ 2,382
3/4 inch	2,599	2,674	3,473	3,574
1 inch	4,330	4,456	5,786	5,954
1-1/2 inch	8,661	8,912	11,575	11,911
2 inch	13,86014,262		18,520	19,057
3 inch	Individually calculated based on consumption			
4 inch		"		
6 inch		"		
8 inch		"		
10 inch		"		
12 inch		"		

The water system development charge for each unit of a multi-family dwelling shall be 60 percent of the SDC for a single-family dwelling (5/8-inch meter).

For meters three inches and larger, estimates of anticipated average day use, peak day, and four-day maximum water use will be determined by the Water Division. Peak day is defined as the maximum 24-hour use during summer months of June through and including September. Four-day maximum use is defined as the average use per day of the four highest consecutive days of the customer's water use in the summer months. For inside City customers, the average day SDC cost is $2.56/gallon (effective 1/1/03) and $2.64/gallon

(effective1/1/04). The peak day SDC cost is $0.27/gallon (effective 1/1/03) and $0.28/gallon (effective 1/1/04). The four-day maximum SDC cost is $2.29/gallon (effective 1/1/03) and $2.36/gallon (effective 1/1/04). For outside City customers, the average day SDC cost is $3.08/gallon (effective 1/1/03) and $3.17/gallon (effective 1/1/04). The peak day SDC cost is $0.33/gallon (effective 1/1/03) and $0.34/gallon (effective 1/1/04). The four-day maximum SDC is $2.75/gallon (effective 1/1/03) and $2.83/gallon (effective 1/1/04).

The SDC will be the sum of the average day use multiplied by the average day cost/gallon, the peak day use minus average day use multiplied by the peak day cost/gallon, and the four-day maximum use minus average day use multiplied by the four-day maximum cost/gallon.

The SDC paid for meters larger than two inches, as of April 23, 2001, will be adjusted annually if actual usage is greater than 110 percent of the anticipated average day use during a 12-month period of time. In these instances, an additional SDC will be charged, using the same methodology for calculating average day, peak day, and four-day maximum water use and multiplying by the respective SDC cost per gallon. This requirement for an additional SDC may be waived upon satisfactory demonstration by the customer that the increased water use was temporary in nature and will return to the originally anticipated level.

C. New water service connections dedicated exclusively for fire protection purposes shall be exempt from payment of the SDC. The conversion of a dedicated fire service to a service for use other than exclusively for fire protection shall require the payment of the SDC as provided for in subsection B above.

D. Credit policy for retail customers previously or currently metered:

1. When a request or requirement for a larger meter is made, an SDC credit for the old meter would be the current published amount for meters up to two inches in size. For meters three inches or larger, the credit would be calculated based on 150 percent of the highest maximum annual daily average water use derived from billing records. If billing records are not available for a specific meter, the SDC credit calculation will be based on a system-wide use data for that size meter.

2. For situations where meters three inches or larger exist and water use will increase, but no change in the meter is required, an SDC will not be required unless the projected use is more than 150 percent of historical use. If the projected use exceeds the 150 percent historical use quantity, an SDC will be calculated for the quantity of water in excess of the 150 percent figure. Prior written commitments to deliver a specific quantity of water, if greater than 150 percent of historical use, will be honored.

For existing meters less than three inches, water use through the meter may be increased to the design capacity of the meter without an SDC charge.

3. Credit shall be given for inactive or previously removed meters that can be verified by Division records. The credit will be determined as stated in subsection D.1 above.

4. Credits as computed will be subtracted from the determined SDC amount. No refunds are allowed in the event the credits exceed the SDC amounts.

5. This section is not applicable to Simpson Tacoma Kraft Company's existing services.

E. For wholesale meters, the SDC will be determined based on the customer's anticipated water use.

1. Estimates of anticipated average day use, peak day, and four-day maximum water use will be determined by the Water Division. Peak day is defined as the maximum 24-hour use during summer months of June through and including September. Four-day maximum use is defined as the average use per day of the four highest consecutive days of water use in the summer months. The average day SDC cost is $3.08/gallon (effective 1/1/03) and $3.17/gallon (effective 1/1/04). The peak day SDC cost is $0.33/gallon (effective 1/1/03) and $0.34/gallon (effective 1/1/04). The 4-day maximum SDC cost is $2.75/gallon (effective 1/1/03) and $2.83/gallon (effective 1/1/04).

The SDC will be the sum of the average day use multiplied by the average day cost/gallon, the peak day use minus average day multiplied by the peak day cost/gallon, and the four-day maximum use minus average day multiplied by the four-day maximum cost/gallon.

The SDC, as of the effective date of this ordinance, will be adjusted annually based on actual usage. If usage is greater than 110 percent of the anticipated average or peak day use during a 12-month period of time, an additional SDC may be charged using the same methodology for calculating average day, peak day, and four-day maximum water use and multiplying by the respective SDC cost per gallon then in effect. This requirement for an additional

SDC may be waived upon satisfactory demonstration by the customer that the increased water use was temporary in nature and will return to the originally anticipated level.

2. For situations where an existing wholesale customer is increasing its purchase of water, SDC credit for existing service will be based on either maximum historic use or prior written commitments to deliver a specific quantity of water, whichever is greater.

F. SDCs for meters two inches and smaller are payable in full at the time the meter installation is requested. Time payments will be allowed for SDCs for meters three inches and larger, for up to ten years, at the discretion of the customer, as follows:

1. When a down payment of 20 percent or more is initially paid, the Water Division will accept annual payments, with interest, on the unpaid balance calculated using the then current prime rate of interest less 2 percent.

2. When a down payment of at least 10 percent, but less than 20 percent, is initially paid, the Water Division will accept annual payments, with interest, on the unpaid balance calculated using the then current prime rate of interest.

3. The time payment agreements shall provide that this obligation constitutes a lien on the benefited premises and that the City has the right to terminate water service for any non-payment of the amounts due on the outstanding balance. In addition, unless the customer is a financially stable public entity, the customer shall be required to provide security such as a financial

guarantee bond to guarantee payment of the SDC or make incremental prepayments of the SDC plus interest on the balance of the outstanding total amount of the SDC.

G. Rate Adder to Recover Capital Costs Not Covered by the SDC. In addition to paying the System Development Charge (SDC) set forth in this section, a customer who proposes to use water for a new or enlarged power plant, and who does not use best available water conservation technology (BAWCT), shall be required to pay, in addition to the applicable water rate, an adder to such rate in accordance with Tacoma Water's Customer Service Policy for New Power Plants. The adder shall be calculated to recover over a period of 20 years a portion of the capital costs that are not covered by the System Development Charge for such customer. This present value of the adder (spread over 20 years) will be equivalent to an SDC on that portion of the customer's water consumption that is in excess of the amount of water the customer would have consumed had BAWCT been used. Said customers shall also be required to enter into a water service agreement with Tacoma Water, and such agreement shall be submitted to the Public Utility Board for approval.

Section 7. That Section 12.10.400 of the Tacoma Municipal Code is hereby amended to read as follows:

12.10.400 Rates - Inside and outside City limits. The standard charge for water supplied inside and outside the City for residential, commercial/industrial, parks and irrigation, and public facilities use shall consist of a customer charge, also termed a "monthly ready to serve charge," based on the meter size together

with the rate for the quantity of water used.

For water supplied to a single premises which contains multiple dwelling units, i.e., two or more houses under the same ownership, duplexes, apartment buildings, condominiums, mobile home parks, trailer courts, industrial buildings, etc., the monthly charges will be the same as indicated above.

When water is being supplied to an existing multiple premises, i.e., two or more separate premises being served by one service and meter, the "monthly ready to serve charge" will be based on either the existing meter size or on a 5/8-inch meter size for each premises served, whichever is the greater charge.

When more than one service supplies a premises, the consumption of water for each meter shall be computed separately.

The monthly ready to serve charge shall be in accordance with the following schedule for residential, commercial/industrial, commercial/industrial large volume, parks and irrigation, public facilities, and wholesale service.

Ready to Serve Charge				
Meter Size (Inches)	Inside Commencing		Outside Commencing	
	1/1/03	1/1/04	1/1/03	-1/1/04
5/8	$10.14	$10.95	$12.17	$13.14
3/4	15.21	16.43	18.25	19.72
1	25.35	27.39	30.42	32.87
1-1/2	50.70	54.77	60.84	65.72
2	81.12	87.63	97.34	105.16
3	152.10	164.31	182.52	197.17
4	253.50	273.86	304.20	328.63
6	507.00	547.71	608.40	657.25
8	811.20	876.34	973.44	1,051.61
10	1,166.10	1,259.74	1,399.32	1,511.69
12	1,711.13	1,848.53	2,053.36	2,218.24

The schedule of rates for water used shall be as follows and billed to the nearest CCF (100 cubic feet or approximately 748 gallons):

A. Residential Service.

Range in CCF (100 cubic feet)	Rate per CCF			
	Inside Commencing		Outside Commencing	
	1/1/03	1/1/04	1/1/03	1/1/04
For each CCF of water consumption during the winter months of October through and including May	$0.828	$0.894	$0.994	$1.074
For the first five CCF of water consumption per month during the summer months of June through and including September	$0.828	$0.894	$0.994	$1.074
For each CCF of water consumption over five CCF during the summer months of June through and including September	$1.035	$1.118	$1.243	$1.343

B. Commercial and Industrial - General Service.

Rate per CCF				
	Inside Commencing		Outside Commencing	
	1/1/03	1/1/04	1/1/03	1/1/04
For each CCF of water consumptic	$0.776	$0.840	$0.931	$1.008

C. Commercial and Industrial - Large Volume Service. Customers may qualify for this rate based on an established consumption history greater than 65,000 CCF annually.

Rate per CCF				
	Inside Commencing		Outside Commencing	
	1/1/03	1/1/04	1/1/03	1/1/04
For each CCF of water consumption	$0.662	$0.731	$0.794	$0.877

D. Parks and Irrigation Service.

Rate per CCF				
	Inside Commencing		Outside Commencing	
	1/1/03	1/1/04	1/1/03	1/1/04

For each CCF of water consumption	$0.774	$0.929	$0.862	$1.034

E. Public Facilities Service. Whenever water is provided for public use, such as fountains, rest rooms, or other publicly owned facilities, it shall be metered and charged for at the regular rates as prescribed under Commercial/Industrial or Parks and Irrigation, depending on the type and location of use.

F. Wholesale Service. Wholesale water service may be provided to community water systems that are in compliance with state Department of Health regulations. Any customer purchasing wholesale water must adopt or commit, in writing, to a water conservation and water shortage response program substantially equivalent to the Division's program as a condition of service.

1. Water Rates. A wholesale water service customer may choose, in writing, one of two available rate schedules for each meter in service, either the constant use schedule or the summer peaking schedule. Both of these rate schedules shall consist of the ready to serve charge based on the meter size, together with a rate for water used as shown below:

a. Constant Use Customer:

Constant Use Customer			2005	2006
	Commencing			
	01/01/03	01/01/04		
Per CCF for winter months (October - May)	$0.785 →	$0.845	$.91	$.98
Per CCF for summer months (June - September)	$0.982 →	$1.058	$1.14	$1.23

7.8% INCREASE

This option may be considered by those customers using water on a year-round basis where their average summer day use divided by their average winter day use results in a summer/winter use ratio of 2:5 or less.

b. Summer Season, Peaking:

Summer Season, Peaking	
Commencing	
1/1/03	1/1/04
$1.473 per CCF	$1.587 per CCF

This option will be used for those customers using relatively large amounts of water in the summer months and little or no water in winter months. The ratio of average summer day use divided by average winter day use shall be greater than 2:5.

For purposes of these rates, summer-use months are defined as June through September and winter-use months are October through May.

Existing customers will be classified into one of the two rate schedules upon annual review of their usage patterns. New customers will select a rate based upon anticipated use. This selection will be subject to revision if usage is not consistent with the above options after a six-month period.

2. Additional Water. Additional or new water may be provided by the City to a wholesale customer conditioned upon satisfying the following:

a. For every new customer of the wholesale customer that is provided with water from City's surplus supply, the wholesale customer shall remit to the City (on a monthly basis or by other arrangement as agreed to by the Superintendent) the appropriate SDC for said customer based on meter size in accordance with Section 12.10.310.

b. That, in lieu of satisfying subsection A above, in the event the wholesale customer is in a water deficient status or later becomes water

deficient as determined by the Superintendent in consultation with wholesale customer, then the Superintendent shall establish a SDC equivalent for said wholesale customer. This SDC equivalent shall not be less than what the total "retail customer equivalent" would have been for the total deficiency.

c. That the City and wholesale customer shall enter into a letter agreement setting forth the above requirements and committing the wholesale customer to remit the SDC payment to City. The wholesale customer may be required to provide City with periodic reports, certified to be accurate, detailing pertinent data.

G. Emergency Intertie Service. Requests for one-way and two-way emergency intertie service between the City and another purveyor will be considered.

The Superintendent may enter into informal agreements, specifying the terms under which water will be furnished or accepted by the Division. Said agreement shall provide that neither party shall be liable for failure to deliver water to the other at any time.

H. Fire Protection Service. Where City water is used for all purposes, such customers are entitled to a separate fire service at the regular fire service rate, payable monthly as follows:

Meter Size (Inches)	Inside and Outside Commencing		Maximum Allowable Monthly Water Usage for Testing and Leakage in CCF
	1/1/03	1/1/04	
2	$10.16	$10.88	2
3	14.81	15.85	2
4	24.73	26.47	2
6	55.46	59.37	2
8	98.74	105.70	2
10	154.45	165.34	2
12	247.03	264.45	2

Where such fire service is provided, no charge will be made, as shown in the table above, for water used for monthly leakage and testing or for water used in extinguishing fires of incendiary or accidental origin if the customer at the location where the use occurs gives written notice to the Division within ten days from the time of such fire. Otherwise, the Division will conclude that water is being used for purposes other than extinguishing fires.

Whenever water from City supply is available on a premises for fire protection only and is used from a regular fire service for purposes other than extinguishing fires of incendiary or accidental origin, 12 times the monthly service charge shall be the monthly minimum charge and the charge for water consumed shall be at $1.473 per CCF commencing January 1, 2003, and $1.582 per CCF commencing January 1, 2004.

Unauthorized use of water through a detector check meter more than once per calendar year may be cause for installation of a fire line meter at the expense of the customer. Whenever water is used for purposes other than extinguishing fires, the amount of water used shall be subject to the appropriate sanitary sewer

charge as defined in Chapter 12.08, in addition to the fire penalty rate.

Should the unauthorized use continue, the service will be considered as other than standby fire protection and be billed in accordance with the type of use pursuant to this section, and shall be subject to payment of the applicable SDC pursuant to Section 12.10.310. Refusal to pay for the installation of the fire line meter and/or the SDC shall result in termination of service pursuant to Section 12.10.130.

When a customer desires City fire service for the protection of a premises and the domestic water for said premises is provided from another source, the applicable single-family residential, multi-family residential, or commercial/industrial rates shall apply for fire protection service inside and outside the City, respectively. When any outlet for fire protection purposes is installed on a commercial or industrial service, no rebate will be allowed for water used for extinguishing a fire.

I. Special Contracts. The Superintendent, with the approval of the Board, shall have the right to enter into contracts for periods up to 20 years where service conditions are extraordinary; provided, that such contracts shall contain applicable rates as adopted by the Board and the Council.

J. Simpson Tacoma Kraft Company Contract. The rates, terms, and conditions in the contract between the City and Simpson Tacoma Kraft Company are applicable, except as modified by thissection.

For a nominated contract demand of 21 million gallons per day (MGD), the water rate shall be:

1. Water use less than 85 percent of contract demand (or 17.85 MGD): The daily charge will consist of 85 percent of nominated flow (as stated in the contract) multiplied by the basic water charge, or the contract demand charge and a water usage charge per million gallons as stated below, whichever is lower.

2. Water use within the range of contract demand plus 9 percent or minus 15 percent, or between 22.89 and 17.85 MGD: The daily charge will consist of a basic water charge per million gallons as stated below.

3. Water use greater than contract demand plus 9 percent (or 22.89 MGD): The daily charge will be the basic water charge per million gallons for the first 22.89 MGD plus the excess water usage charge (or the commercial and industrial - large volume rate) for water metered in excess of the contract plus 9 percent, as stated in the following table.

Billing Components	Commencing	
	1/1/03	1/1/04
Basic Water Charge per Million Gallons	$ 466.03	$ 505.64
Contract Demand Charge	$6,850.64	$7,432.91
Water Usage Charge per Million Gallons	$ 139.81	$ 151.69
Excess Water Usage Charge (Commercial and Industrial – Large Volume Rate) per Million Gallons	$ 885.03	$ 977.27

4. The Superintendent is hereby authorized to execute a contract with Simpson to provide additional terms and conditions of service and other provisions consistent with this ordinance.

K. Low-Income/Elderly and/or Low-Income/Handicapped.

Residential Service: The standard charge for water supplied inside and

outside the City for residential service shall be discounted by 25 percent for those customers who qualify under the following criteria:

Applicability: To Water Division customers who reside in single-family dwelling units or individually metered multiple dwelling units who:

1. Are 62 years of age or older and have a maximum income, if single, of not more than 70 percent of the Washington State median income for a one person household, as computed annually by the state or the City, or whose annual income, if married, together with that of the spouse does not exceed 70 percent of the Washington State median income for a two-person household as computed annually by the state or the City; or receive Supplemental Security Income pursuant to 42 USC Section 1381-1383; or are disabled and receive funds from a disability program as a result of a disability that prevents them from working consistent with the equivalent of 42 USC Section 401 et seq. and whose annual household income, together with all household members, does not exceed 70 percent of the Washington State median income for the number of individuals in the household as computed annually by the state or the City; and

2. Are a single occupant or head of a household or the spouse of the head of the household; and

3. Reside in the dwelling unit; and

4. Are billed or are the spouse of a person billed by the City.

Eligibility shall be certified by the Water Division in conjunction with the appropriate organization.

L. Water System Acquisition. A water system may be acquired by the City under an agreement between the water system owner(s) and the City with Board and Council approval. When all or a portion of the acquired system requires upgrading equal to Division standards, the agreement shall provide for funds to achieve compliance with said standards. Under the agreement, a surcharge may be levied by the City for a period of time or a Local Improvement District (LID) may be formed in accordance with RCW Title 35. The surcharge shall be an additional charge equivalent to the Ready to Serve charge per month times a multiplier, or an actual dollar amount as stated in the acquisition agreement and set forth below. The current surcharge areas include:

Former Water System	
Day Island Improvement Club	3.5 Multiplier
Werron Road Mutual Water Company	2 Multiplier
Hyada Mutual Service Company	Total monthly charge $30.00

If allowed by the acquisition agreement, a customer in a surcharge area may opt to totally pay off the monthly surcharge amount.

Section 8. The effective date of this ordinance shall be January 1, 2003.

Passed December 10, 2002

_____
Mayor

Attest:

_____
City Clerk

Approved as to form and legality:

_____
Chief Assistant City Attorney

ord9335.doc

EC 004 (11/89)

JURISDICTION DIVIDER

Covington Water District
(formerly King County Water District No. 105)

AGREEMENT ESTABLISHING USE AND

SERVICE AREAS OF THE PARTIES

AGREEMENT between King County Water District No. 111, a special purpose district of the state of Washington, hereinafter called "District," and King County Water District No. 105, a special purpose district of the state of Washington, hereinafter called "Second Party."

1. Purpose. The District and Second Party have previously informally agreed to the establishment of a boundary between the service areas of the two parties and are now desirous of confirming the previous understanding and agreement in writing.

2. Agreement. It is hereby agreed between the parties that the boundary between the areas served by each of the parties shall be as follows:

> Beginning at the North one-quarter corner of Section 23, Township 22 North, Range 5 East, W.M.;
>
> thence south along the east line of the West 1/2 of Sections 23, 26 and 35, to the intersection of the East line of the West 1/2 of said Section 35, with the Northwesterly margin of S.R. 18;
>
> thence southwesterly along the Northwesterly margin of said S.R. 18 to its intersection with the south line of Section 34, Township 22 North, Range 5 East, W.M. (Centerline of 156th Avenue SE and the Northwesterly margin of S.R. 18.)

District shall serve the area lying generally west of said boundary line and Second Party shall serve the area lying generally east of said boundary line.

DATED: 23RD AUGUST, 1978.

KING COUNTY WATER DISTRICT NO. 111

By _____
Gary G. Grime, Commissioner

By _____
Robert R. Sparks, Commissioner

By _____
Charles E. Wilson, Commissioner

KING COUNTY WATER DISTRICT NO. 105

By _____
Commissioner

By R. L. Bishop
Commissioner

By _____
Commissioner

WATER DISTRICT NO. 105, KING COUNTY

RESOLUTION NO.

WATER DISTRICT NO. 111, KING COUNTY

RESOLUTION NO. 141-9 79

A JOINT RESOLUTION establishing water service areas between Water Districts No. 105 and 111.

WHEREAS, Water District No. 105, King County ("105") and Water District No. 111, King County ("111") are municipal corporations organized under the laws of the State of Washington; and

WHEREAS, the easterly boundary of 111 and the westerly boundary of 105 are in close proximity to each other; and

WHEREAS, each Water District deems it appropriate to establish a common water service area boundary in order that each District can efficiently and economically plan its system and serve the customers within each District's service area; now, therefore

BE IT RESOLVED by the Boards of Water Commissioners of 105 and 111 as follows:

1. WATER SERVICE AREAS - BOUNDARIES. The common boundary of the 111 and 105 water service areas shall be as set forth on Exhibit "A" attached hereto.

2. SERVICE AREAS. 105 shall be entitled to provide water service ("to serve") the area ("service area") east of the above common boundary and 111 will be entitled to serve the service area west of the above common boundary.

3. FUTURE ADJUSTMENTS. The above common boundary line is a line which in the judgment of the Boards of Water Commissioners of 111 and 105 currently appears to be in the best interest of the two Water Districts and the potential customers in the area. It is recognized, however, that land development is not a completely predictable factor, and may dictate the need for minor adjustments to the line in the future. Accordingly, both Districts agree that they will, in the

future, cooperate in adjustments to said boundary line which will benefit and facilitate land development along the line. It is agreed by both Boards of Water Commissioners that no single plat or development will ordinarily be split between the two Districts.

4. CORPORATE BOUNDARIES. The above boundary line shall control the service area of the two Districts, regardless of the present corporate boundaries of either District. In the future, however, neither Water District shall annex property beyond its own service area without the written consent of the other District.

5. APPLICATIONS FOR SERVICE. Neither Water District shall accept or process applications for water service within the other Water District's service area.

6. TEMPORARY SERVICE. In the event that one District determines that water service to property within its own service area would, at that time, be inappropriate or uneconomical, the other District will, on request, provide temporary water service to the property, on the following or such other terms as shall be agreed upon by the Districts:

> The District within whose service area the property lies ("the service district") shall construct all necessary water mains and other facilities; collect its own hook-on, meter installation and other charges; and extend said facilities to the nearest adequate water main within the other Water District ("the temporary service district"). The temporary service district shall connect, or superintend connection, of the water mains to its own system. The temporary service district shall thereafter provide water to the property; read the meters; and bill the customers therein at the same rate as it bills its own customers. The temporary service district shall have full responsibility in respect to collection of any customer charges, including removal of meter, lien and/or foreclosure; and the customer shall be subject to that temporary service district's standard meter lock and/or removal charges, penalties and interest on delinquent accounts.
>
> The permanent service district shall be entirely responsible for the maintenance of its water mains, meters and other facilities. The temporary service district shall have no responsibility in respect to the installation beyond the connection point to its system, and the billing and collection of water charges.
>
> At such time as the permanent service district is able, it will, at its expense, connect the facil-

ities to its system, and disconnect them from the temporary service district's facilities.

7. CROSS-CONNECTIONS. It is agreed that it is in the interest of both Districts that their water systems be cross-connected at one or more points in order to provide water to the other District in emergencies.

Each District agrees, in its Comprehensive Planning, to take this into account and to jointly plan such cross-connection(s) as both deem appropriate. At the time of cross-connection, the Districts will enter into an agreement concerning the cost of water furnished; metering; and sharing of the cost of construction of such cross-connection.

8. SETTLEMENT OF DIFFERENCES. The two Districts understand that it is impossible to predict and resolve all eventualities or conflicts that may arise in respect to the service areas either side of the above boundary line. Each District, however, agrees to cooperate to the utmost with the other to the end that the best interest of the property owners and the Districts' Comprehensive Plans will be served. In the event that an unanticipated occurrence arises and the two Districts are unable to agree upon a method of resolving the same, then each District may appoint an arbitrator experienced in water works and water works planning. The two arbitrators so appointed, shall appoint a third arbitrator. The three arbitrators thus appointed shall promptly proceed to investigate the matter and render a decision. The decision of the arbitrators shall be final and binding in accordance with Chapter 7.04 of the Revised Code of Washington.

ADOPTED at a regular meeting of the Board of Water Commissioners of Water Distrct No. 105, King County, held this 22 day of June, 1979.

R. L. Bishop

COMMISSIONERS

ADOPTED at a regular meeting of the Board of Water Commissioners of Water District No. 111, King County, held this ____ day of _____, 1979.

_____

_____

_____

COMMISSIONERS

/79

EXHIBIT "A" TO WATER DISTRICT NO. 105,
KING COUNTY, RESOLUTION NO. 717

The description of the common boundary line between King County Water Districts No. 105 and 111 is as follows:

> Beginning at the intersection of SE 240th St. and a line lying 100 feet east of and parallel to 158th Ave SE; thence south along said line to SE 243rd St.; thence west on SE 243rd St. to 158th Ave SE; thence south on 158th Ave SE to SE 253rd St.; thence east on SE 253rd St to 158th Pl. SE; thence south on 158th Pl. SE to SE 254th Pl.; thence west on SE 254th Pl. to 157th Pl. SE; thence south on 157th Pl. SE to SE 256th St.; thence west on SE 256th St. to 154th Ave SE; thence south on 154th Ave SE to SE 270th St.; thence east one SE 270th St. to 158th Ave SE; thence south on 158th Ave SE to its intersection with State Highway No. 18.

If any of the above streets do not presently exist; then the reference to the same is to that street if it did exist or was extended. Attached hereto is a map illustrating said common boundary.

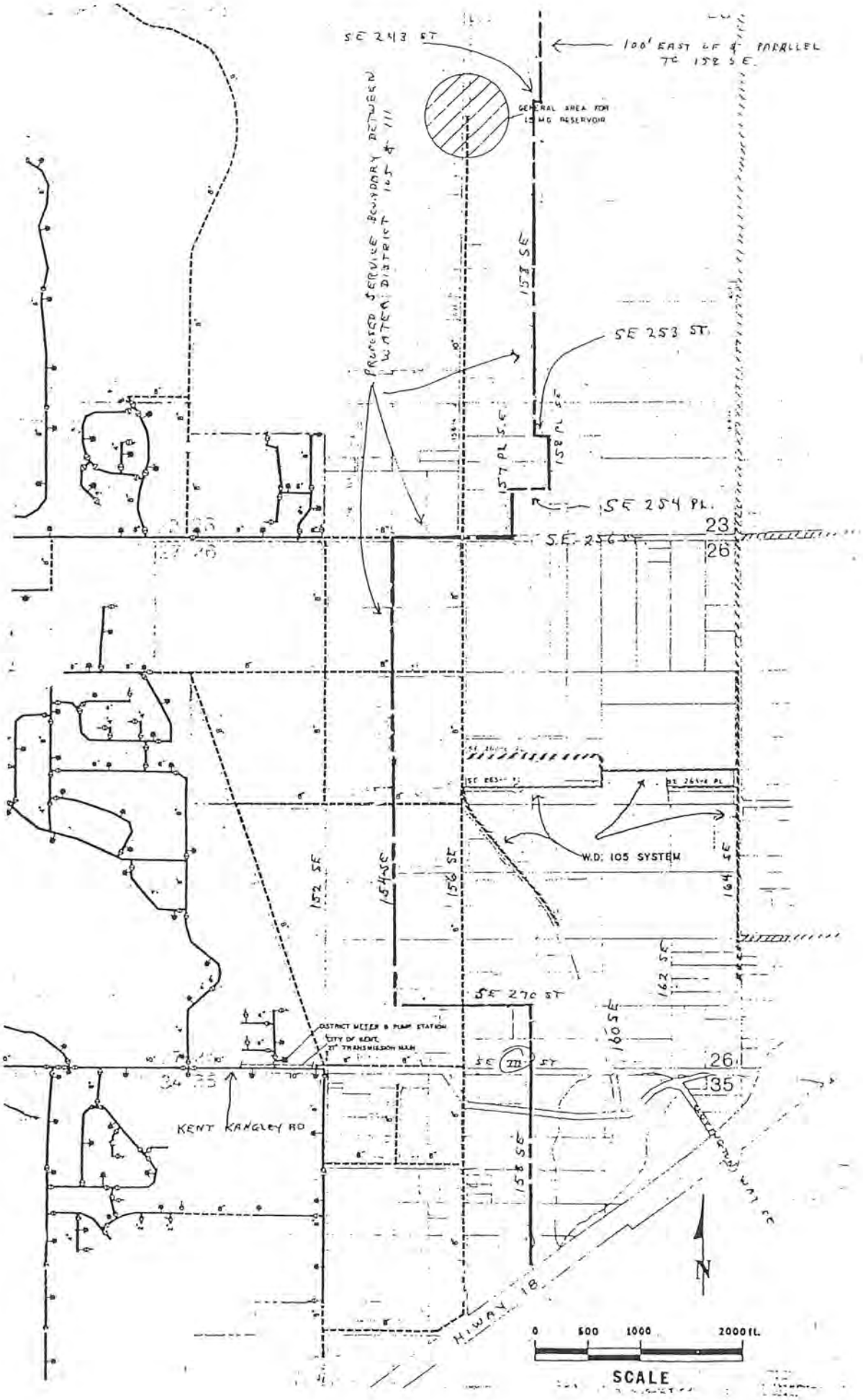
SE 243 ST
100' EAST OF & PARALLEL TO 158 S.E.
GENERAL AREA FOR 15 MG RESERVOIR
PROPOSED SERVICE BOUNDARY BETWEEN WATER DISTRICT 105 & 111
158 SE
SE 253 ST.
157 PL S.E.
158 PL SE
SE 254 PL.
23
S.E. 256 ST
26
W.D. 105 SYSTEM
152 SE
154 SE
156 SE
164 SE
162 SE
SE 270 ST
160 SE
DISTRICT METER & PUMP STATION
CITY OF KENT
21" TRANSMISSION MAIN
SE 271 ST
26
35
KENT KANGLEY RD
158 SE
HIWAY 18
N
0
500
1000
2000 FL.
SCALE

EXHIBIT A TO KING COUNTY WATER DISTRICT NO. 105, RESOLUTION NO. 1235 , AND KING COUNTY WATER DISTRICT NO. 111, RESOLUTION NO. 227-10-88

The description of the common boundary line between King County Water Districts No. 105 and 111 is as follows:

> Beginning at the intersection of S.E. 240th St. and a line lying 100 feet east of and parallel to 158th Ave. S.E.; thence south along said line to S.E. 243rd St.; thence west on S.E. 243rd St. to 158th Ave. S.E.; thence south on 158th Ave. S.E. to S.E. 253rd St.; thence east on S.E. 253rd St. to 158th Pl. S.E.; thence south on 158th Pl. S.E. to S.E. 254th Pl.; thence west on S.E. 254th Pl. to 157th Pl. S.E.; thence south on 157th Pl. S.E. to S.E. 256th St.; thence west on S.E. 256th St. to 154th Ave. S.E.; thence south on 154th Ave. S.E. to the centerline of the Bonneville Transmission Line easement - Covington - Renton 1; thence southeasterly along said centerline to S.E. 272nd St.; thence east on S.E. 272nd St. to the centerline of Soos Creek; thence southerly along the centerline of Soos Creek to its intersection with State Highway No. 18; thence southwesterly along State Highway No. 18 to its intersection with 158th Ave. S.E.

If any of the above streets do not presently exist; then the reference to the same is to that street if it did exist or was extended. Attached hereto is a map illustrating said common boundary.

33110

as set forth on Exhibit "A" attached hereto. A map of the area of the boundary line adjustment is on Exhibit "B" attached hereto.

2) Service Areas. 105 shall be entitled to provide water service ("to serve") the area ("service area") east of the above common boundary and 111 will be entitled to serve the service area west of the above common boundary.

3) Future Adjustments. The above common boundary line is a line which in the judgment of the Boards of Water Commissioners of 111 and 105 currently appears to be in the best interest of the two water districts and the potential customers in the area. It is recognized, however, that land development is not a completely predictable factor, and may dictate the need for minor adjustments to the line in the future. Accordingly, both districts agree that they will, in the future, cooperate in adjustments to said boundary line which will benefit and facilitate land development along the line. It is agreed by both Boards of Water Commissioners that no single plat or development will ordinarily be split between the two districts.

4) Except as specifically modified herein, Resolution No. 740 of 105 and Resolution No. 141-9-79 of 111 shall remain in full force and effect and otherwise

unaffected by the boundary line change affected by this joint resolution.

ADOPTED at a regular meeting of the Board of Water Commissioners of Water District No. 105, King County, held this 14 day of OCT, 1988.

KING COUNTY WATER DISTRICT NO. 105
BOARD OF COMMISSIONERS

Dennis H. Johnson
Commissioner

Clarence G. Potts
Commissioner

Donna W. Navet
Commissioner

ADOPTED at a regular meeting of the Board of Commissioners of Water District No. 111 of King County, held this 13th day of October, 1988.

KING COUNTY WATER DISTRICT NO. 111
BOARD OF COMMISSIONERS

Gary G. Cline
GARY CLINE, Commissioner

Del Goad
DEL GOAD, Commissioner

Charles Wilson
CHARLES WILSON, Commissioner

33100

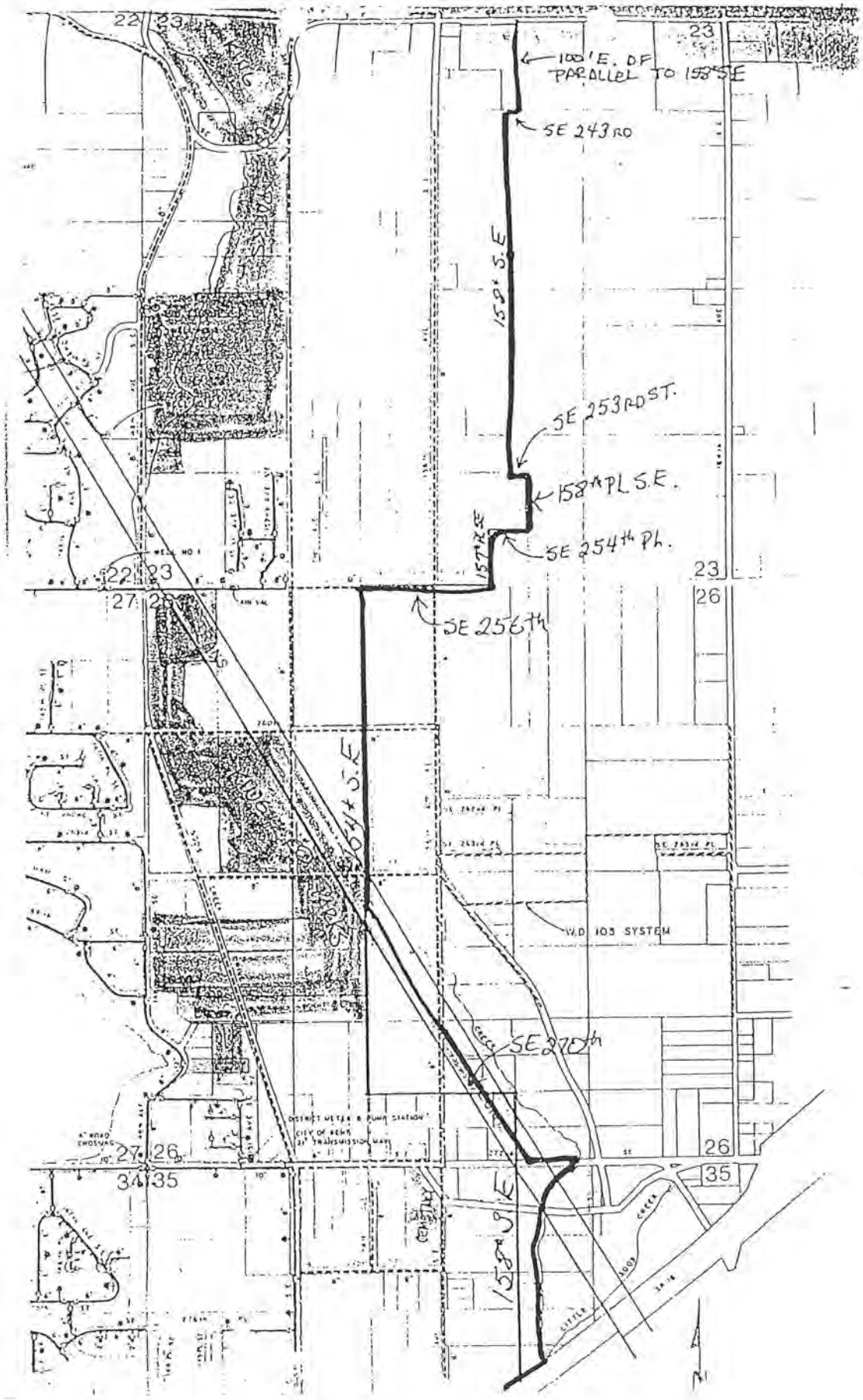

100' E. OF PARALLEL TO 158th S.E.
SE 243RD
158th S.E.
SE 253RD ST.
158th PL S.E.
SE 254th Pl.
157th PL SE
SE 256th
64th S.E.
W.D. 103 SYSTEM
SE 270th
158th S.E.
22
23
27
26
34
35

KING COUNTY WATER DISTRICT NO. 111
KING COUNTY, WASHINGTON

RESOLUTION NO. 594-07-15

RESOLUTION OF THE BOARD OF COMMISSIONERS OF KING COUNTY WATER DISTRICT NO. 111, KING COUNTY, WASHINGTON, APPROVING AN EMERGENCY WATER SUPPLY AGREEMENT WITH COVINGTON WATER DISTRICT.

WHEREAS, pursuant to Title 57 RCW, King County Water District No. 111 ("District") supplies potable water to customers within its boundaries through a public water system; and

WHEREAS, also pursuant to Title 57 RCW, Covington Water District ("Covington") supplies potable water to customers within its boundaries through a public water system; and

WHEREAS, Covington's water service area boundary is adjacent to the District's water service area boundary; and, the District and Covington (the "Parties") currently maintain an intertie connection between their respective water systems ("Intertie"); and

WHEREAS, the Parties have determined it is in the public interest to enter into an agreement for the provision of emergency water supply through the Intertie by Covington to the District; and

WHEREAS, the District is willing to pay Covington for water supplied by Covington to the District, as set forth in an Emergency Water Supply Agreement between the District and Covington, in substantially the form attached hereto as **Exhibit A** and incorporated herein by this reference ("Agreement"); and

WHEREAS, the Parties have the legal authority to cooperate with other municipalities on the basis of mutual advantage and efficient provision of municipal services pursuant to Chapter 39.34 RCW, the Interlocal Cooperation Act, and to install intertie connections between their public water systems pursuant to RCW 90.03.383 to ensure reliable public water supplies, on such terms and conditions as may mutually be agreed upon by the Parties; and

WHEREAS, the District General Manager has recommended the District approve and implement the Agreement; now, therefore,

BE IT RESOLVED, by the Board of Commissioners of King County Water District No. 111, King County, Washington, as follows:

1. The Agreement in substantially the form attached hereto as **Exhibit A** is hereby approved, and the District General Manager is hereby authorized and directed to execute the Agreement on behalf of the District in final form upon its approval by Covington Water District.

ADOPTED by the Board of Commissioners of King County Water District No. 111 at a regular open public meeting thereof held on the 23rd day of July, 2015.

BOARD OF COMMISSIONERS
KING COUNTY WATER DISTRICT NO. 111

By: _____
Gary G. Cline, President

By: _____
Patrick M. Hanis, Secretary

By: _____
Charles E. Wilson, Commissioner

EMERGENCY WATER SUPPLY AGREEMENT

This Agreement ("Agreement") is made by and between Covington Water District, a Washington municipal corporation ("Covington"), and King County Water District No. 111, a Washington municipal corporation ("District"), (individually a "Party" and collectively the "Parties") for the purposes set forth herein.

SECTION I: RECITALS

1.01 The Parties own and operate public water systems and are engaged in the distribution of water to customers in King County. Covington's service area boundary is adjacent to the District's service area boundary. The Parties currently maintain an intertie connection between their respective water systems at the location as depicted on Exhibit "A" attached hereto and incorporated herein by this reference and as further described in Section 2.07 below ("Intertie").

1.02 The Parties now desire to enter into an Emergency Water Supply Agreement to obtain a supplemental source of water supply for emergency purposes through the Intertie. The Parties are willing to provide water supply to each other through the Intertie for emergency purposes, subject to certain terms and conditions.

1.03 The State of Washington, Department of Health ("DOH"), encourages interties between water systems to improve the reliability of public water systems, enhance their management and more efficiently utilize limited water resources.

1.04 In consideration of the terms and conditions contained herein, the Parties now agree as follow.

SECTION II: EMERGENCY WATER SUPPLY

2.01 The purpose of this Agreement is for Covington to provide water supply to the District in the amount not to exceed One Million Four Hundred Forty Thousand gallons per day (1,440,000 gpd) through the Intertie in the event of an emergency, as that term is further defined in this Agreement, and for the District to provide water supply to Covington in the amount not to exceed Seven Hundred Twenty Thousand gallons per day (720,000 gpd) through the Intertie in the event of an emergency.

2.02 The Parties hereby agree to allow an emergency standby source of water through the Intertie. The Intertie shall be an emergency standby connection, and water shall only be drawn through the Intertie when an emergency occurs. An emergency shall be considered any event including, but not limited to, water shortages, power outages, a pump system failure, well system failure, aquifer failure or diminution, or other failure in either Party's water distribution system which impairs the capacity or ability of the Party to maintain its system water capacity for public consumption or fire protection purposes. An emergency shall terminate at such time as the capacity of the Party's water system is restored to its pre-emergency status.

2.03 The requesting Party shall notify the other Party in writing at least forty-eight (48) hours in advance of the date and time the requesting Party desires to receive water through the Intertie. In the case of an urgent need by either Party, water shall be provided immediately to the requesting Party upon verbal notification of such emergency. Follow-up written notice of such emergency request shall be made by the requesting Party.

2.04 Each Party shall pay for all water delivered to them through the Intertie, including flushing water, a base charge of Five Hundred Dollars ($500.00) for each month that the Party receives water supply through the Intertie ("Base Charge"), and the rate of ninety cents ($00.90) per one hundred cubic feet of water (CCF) or portion thereof supplied through the Intertie ("Consumption Charge"). The Consumption Charge rate shall be adjusted annually commencing January 1, 2016 by the annual percentage of increase in the Materials Cost Index published by Engineering News Record measured from November 30 of one year to November 30 of the next year. The Party supplying emergency water shall bill the receiving Party on a monthly basis for the Base Charge and the amount of water delivered through the Intertie for the prior monthly period, and the receiving Party shall pay the Party supplying water such Base Charge and Consumption Charges within thirty (30) days of the date of receipt of such billing. Any billings not paid within such thirty (30) day period shall accrue interest at the rate of six (6) percent per annum until paid.

2.05 Each Party shall use reasonable efforts to provide an uninterrupted supply of water to the requesting Party, provided the Party supplying water shall not be liable for any shortage or interruption in the delivery of water to the requesting Party through the Intertie. In addition, the Party supplying water shall not be liable for any failure, interruption or shortage of water, or any loss or damage resulting therefrom by the requesting Party or any of its customers therefrom occasioned by any cause beyond the control of the Party supplying water. The Party supplying water does not guarantee the availability of water to the requesting Party through the Intertie at all times because of its own needs and water demand. Further, during critical water shortage periods as determined by the Party supplying water, the Party supplying water may close the Intertie until they determine sufficient water supply exists to make such available to the requesting Party. If the Party supplying water declares and/or imposes water usage restrictions within their jurisdiction, but continues to provide water supply to the requesting Party through the Intertie, the requesting Party agrees to reduce the amount of water being delivered through the Intertie by a percentage established by the Party supplying water as a pre-condition to receiving water through the Intertie.

2.06 All water purchased by and delivered to the requesting Party shall only be resold to its customers within their water service boundary for use therein.

2.07 All water delivered by either Party shall pass through the Intertie and shall be measured by metering equipment. The Intertie includes a vault within which are located two water meters, one for each direction of flow.

Within the Intertie vault, Covington shall control and operate the water main, water meter, and rate of flow control valve that flows in the direction of the District, and the District shall be responsible for maintaining said equipment.

Within the Intertie vault, the District shall control and operate the water main, water meter, and booster pump that flows in the direction of Covington, and Covington shall be responsible for maintaining said equipment.

Each Party shall be equally responsible for maintaining the Intertie vault and related appurtenances. Furthermore, each party shall be equally responsible for the monthly power expense to the vault that includes the flat rate, vault light, and the vault sump pump. Covington shall be solely responsible for the power expense of the booster pump when it is operated. The power expense of the booster pump shall be determined as the amount in excess of a routine monthly invoice. Covington will invoice the District annually each January for the prior year shared power expense.

Covington shall control and operate the by-pass valve located on the by-pass line outside of the vault based on having a higher hydraulic grade line.

Each Party shall own, maintain and operate all water main and appurtenances on their respective side of the Intertie.

Responsibilities of the Intertie as outlined above are depicted on Exhibit "B" attached hereto and incorporated herein by this reference.

2.08 Unless otherwise authorized by the Party supplying water, only personnel from the Party supplying water shall operate the Intertie to supply water to the requesting Party.

2.09 Each Party shall be responsible for maintaining a reasonable water quality on their respective side of the Intertie. In the spring of each year both Parties will coordinate the flushing, meter testing, and bacteriological water sample testing of the Intertie. The water used for flushing will not be charged to either Party, and payment for the bacteriological water sample testing will be alternated each year by the Parties.

2.10 Each Party shall, with respect to its duties, responsibilities and operations hereunder, comply with all applicable laws, rules and regulations governing the same.

SECTION III: GENERAL PROVISIONS

3.01 Each Party shall approve the terms and conditions herein by resolution and provide the other Party with a copy of same. Each Party represents to the other it has the full power and authority to enter into this Agreement.

3.02 If either Party commences any legal action relating to the provisions of this Agreement, the prevailing party shall be entitled, in addition to all other amounts to which it is otherwise entitled in this Agreement, to all costs of litigation, including but not limited to, costs, expert witness and reasonable attorney's fees, including all such costs and fees incurred on appeal.

3.03 Covington and the District agree to hold harmless and indemnify the other Party and its employees and agents from any and all claims, damages, costs, and other liabilities caused by the Parties' sole negligence or the Parties' concurrent negligence, but only to the extent of the Parties' concurrent negligence, arising by reason of participation in, in connection with, or relating to the performance of this Agreement. In addition, the Parties agree to defend, indemnify, and hold each other harmless from any and all claims, damages, costs, and other liabilities arising out of any use by either Party or its customers of any water provided through the Intertie, including emergency use for fire purposes and normal domestic use by customer consumption or made by or on behalf of any of either Party's customers which relate in any way to supply of water under this Agreement.

3.04 Either Party may not assign its rights and/or duties under this Agreement without the prior written consent of the other Party, which consent may be withheld by the other Party in its sole discretion.

3.05 This Agreement shall take effect on the last date that this Agreement has been approved and signed by the Board of Commissioners of both Parties ("Effective Date"), provided, however, any water supplied by either Party through the Intertie prior to the Effective Date shall be subject to all of the terms and conditions set forth herein.

3.06 Any notice to be given, document to be delivered, or payment to be made by either Party to the other herein, shall be delivered in person or mailed by certified post and addressed to the District or Covington at the following addresses:

District:	General Manager King County Water District No. 111 27224 – 144th SE Kent, WA 98042
Covington:	General Manager Covington Water District 18631 SE 300th Place Covington, WA 98042

Either Party may, by written notice to the other, designate a different address or designee.

3.07 This Agreement and/or the provision of water through the Intertie may be terminated by mutual agreement of the Parties. This Agreement and/or the provision of water through the Intertie may be terminated by either Party upon giving the other Party at least ten (10) days written notice in the event (1) the Party determines it does not have water supply to make available to the other Party through the Intertie, (2) any public agency or court of law orders the Party to terminate and cease such emergency intertie connection, or (3) the other Party violates any material term or condition set forth in Section 2 of this Agreement and fails to correct or perform as required such term or condition within ten (10) days of written notice from the terminating Party to the violating Party to do so; provided, notwithstanding the foregoing, this Agreement shall continue in three (3) year terms unless either Party notifies the other Party in writing of its intention to terminate this Agreement by giving sixty (60) days advance written

notice prior to each successive three (3) year anniversary date of its intention to terminate the Agreement.

3.08 This Agreement constitutes the entire agreement between the Parties with respect to the subject matter hereof and may be modified only by an agreement in writing signed by both Parties hereto.

3.09 Each Party agrees to comply with all federal, state, and local regulations in the operation of its water system connected to the Intertie which is the subject of this Agreement.

COVINGTON WATER DISTRICT ("Covington")

By _____

Printed Thomas D. Brown

Its General Manager Dated 9-3-15

KING COUNTY WATER DISTRICT NO. 111 ("District")

By William C. Hall

Printed WILLIAM C. HALL

Its GENERAL MANAGER Dated 8/25/2015

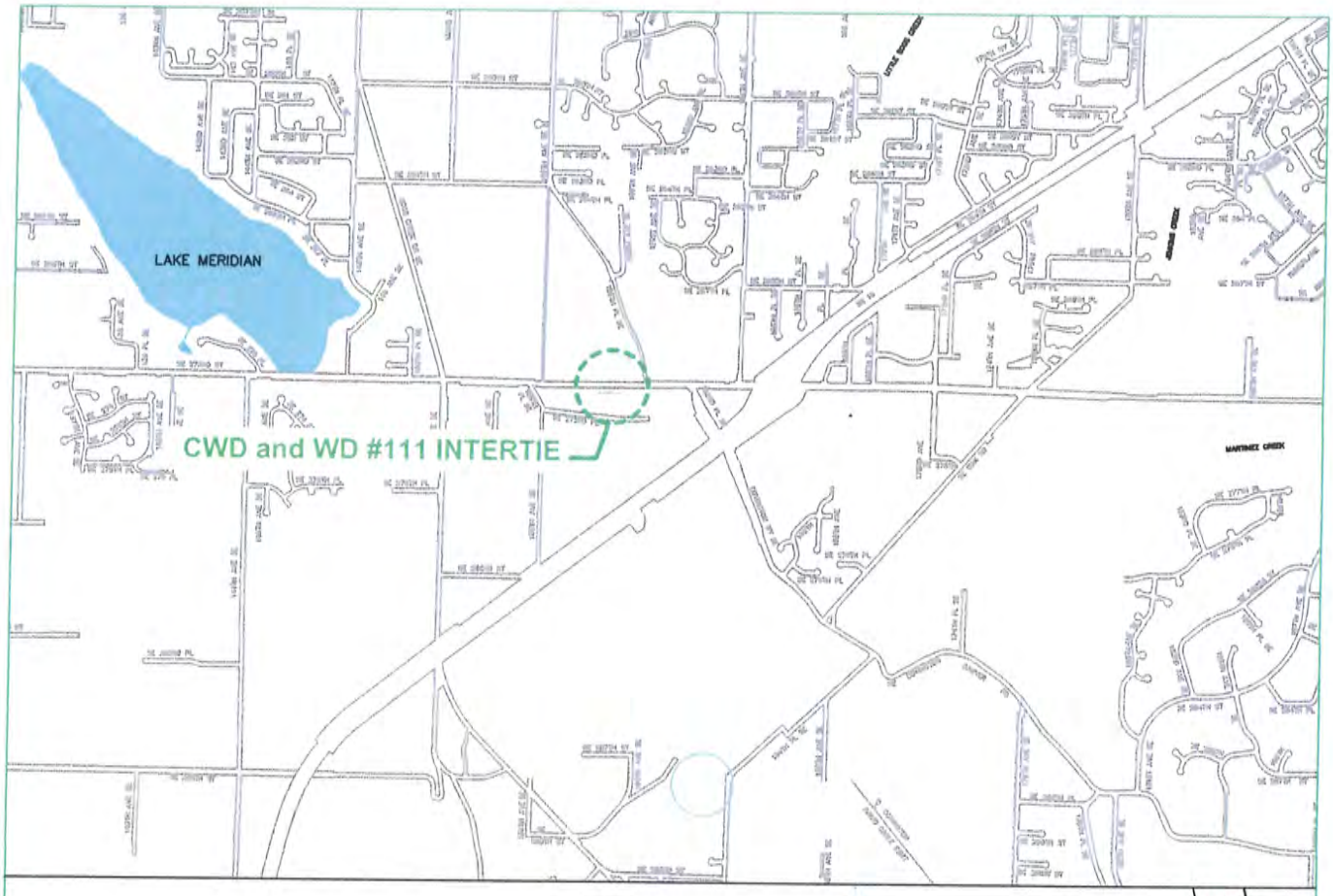

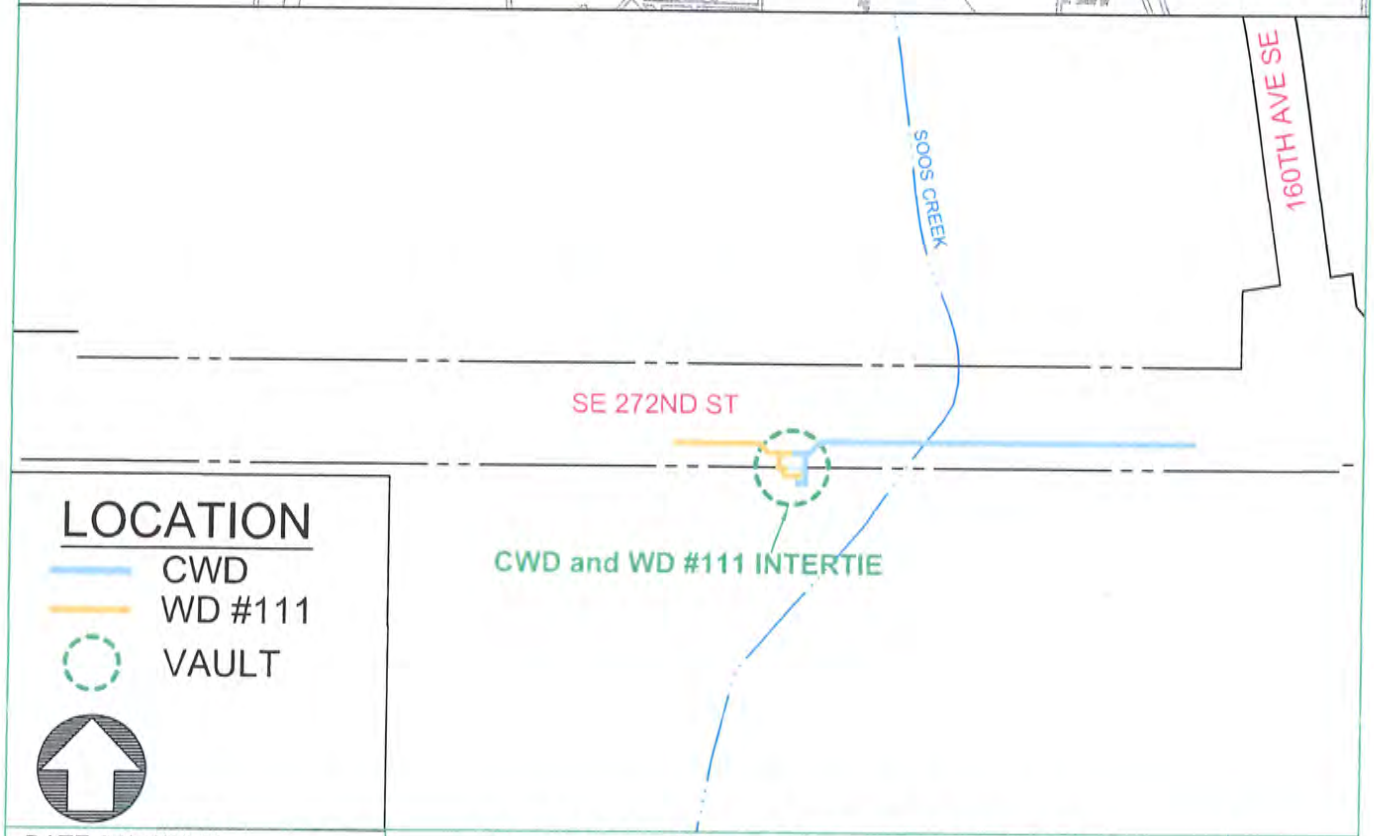

LOCATION

- CWD
- WD #111
- VAULT

DATE 07/30/2015

EXHIBIT A

NOT TO SCALE

CWD - WD #111 INTERTIE

15903 SE 272ND ST

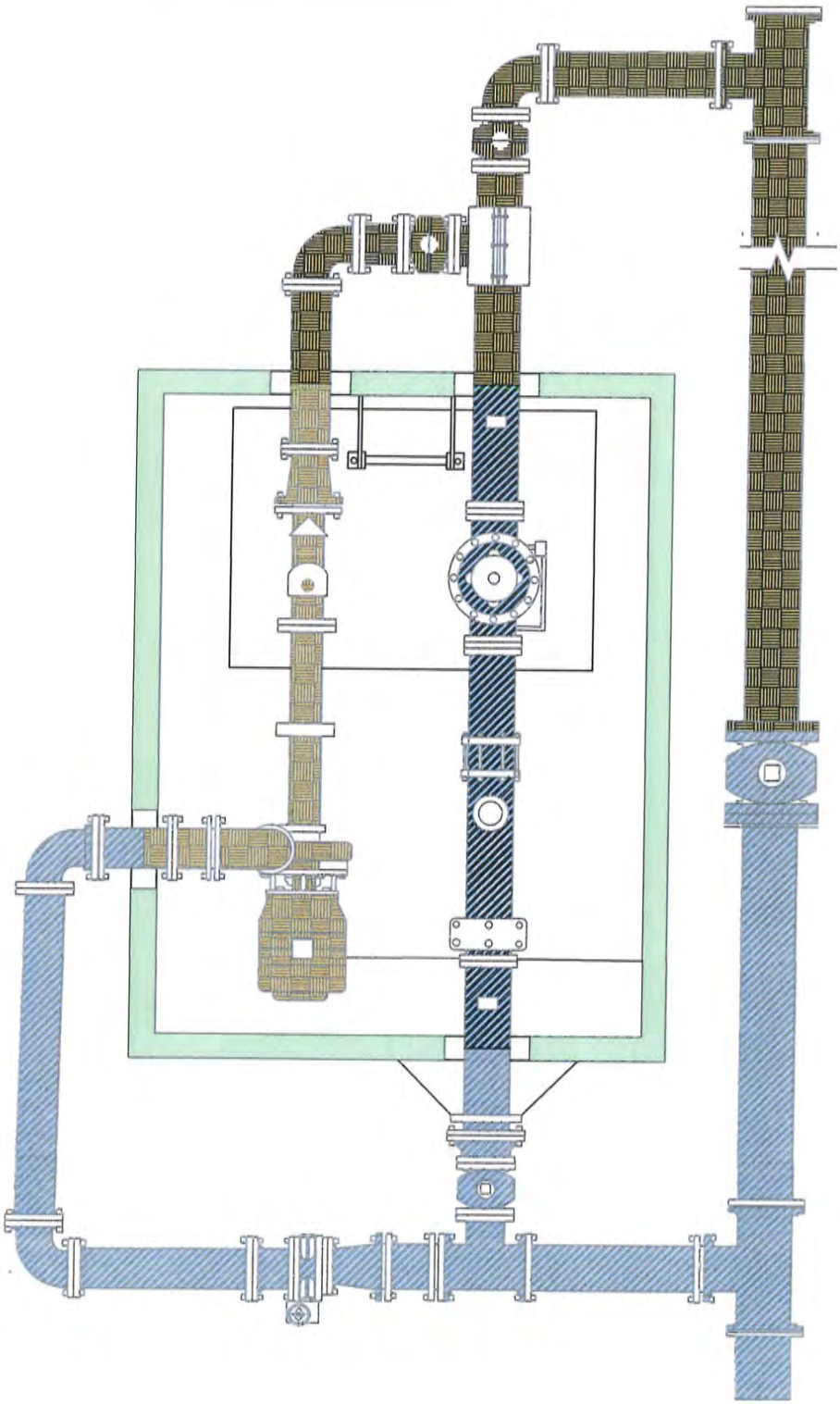

CONTROL

CWD

WD #111

DATE 07/30/2015

EXHIBIT B

NOT TO SCALE

CWD - WD #111 INTERTIE

15903 SE 272ND ST

COVINGTON WATER DISTRICT
KING COUNTY, WASHINGTON
RESOLUTION NO. 4132

RESOLUTION OF THE BOARD OF COMMISSIONERS OF COVINGTON WATER DISTRICT, KING COUNTY, WASHINGTON, APPROVING AN EMERGENCY WATER SUPPLY AGREEMENT WITH KING COUNTY WATER DISTRICT NO. 111.

WHEREAS, pursuant to Title 57 RCW, Covington Water District ("Covington") supplies potable water to customers within its boundaries through a public water system; and

WHEREAS, also pursuant to Title 57 RCW, King County Water District No. 111 ("District") supplies potable water to customers within its boundaries through a public water system; and

WHEREAS, Covington's water service area boundary is adjacent to the District's water service area boundary; and, the District and Covington (the "Parties") currently maintain an intertie connection between their respective water systems ("Intertie"); and

WHEREAS, the Parties have determined it is in the public interest to enter into an agreement for the provision of emergency water supply through the Intertie in the form attached hereto as **Exhibit A** and incorporated herein by this reference ("Agreement"); and

WHEREAS, the Parties have the legal authority to cooperate with other municipalities on the basis of mutual advantage and efficient provision of municipal services pursuant to Chapter 39.34 RCW, the Interlocal Cooperation Act, and to install intertie connections between their public water systems pursuant to RCW 90.03.383 to ensure reliable public water supplies, on such terms and conditions as may mutually be agreed upon by the Parties; and

WHEREAS, Covington's General Manager has recommended that Covington approve and implement the Agreement; now, therefore,

BE IT RESOLVED, by the Board of Commissioners of Covington Water District, King County, Washington, as follows:

1. The Agreement attached hereto as **Exhibit A** is hereby approved.
2. Covington's General Manager is hereby authorized and directed to execute the Agreement on behalf of Covington Water District.

ADOPTED by the Board of Commissioners of Covington Water District at a regular open public meeting thereof held on the 2nd day of September, 2015.

Covington Water District
Board of Commissioners

Jeff Clark, President

Vern Allemand, Secretary

David R. Knight

David B. Roselle

Tal Weberg

COPY

CONTRACT FOR WHOLESALE SUPPLY OF WATER

This Contract for Wholesale Supply of Water ("Contract") is made and entered into by and between Covington Water District, a Washington municipal corporation ("Covington"), and King County Water District No. 111, a Washington municipal corporation ("District"), (individually a "Party" and collectively the "Parties") for the purposes set forth below.

RECITALS

1. Covington, pursuant to Title 57 RCW, owns and operates a system for the supply, transmission and distribution of potable water and is authorized to sell and distribute water to its residents and to other persons and customers located outside the corporate limits of Covington. Covington's water supply is currently in excess of its present and reasonably foreseeable future water demand.

2. Covington's water system is integral to the health and welfare of the residents and customers located within the water service area shown in Covington's Water System Comprehensive Plan and as such Water System Comprehensive Plan may be modified and amended. Covington intends to provide water from the system to meet the current and future needs of the residents and customers of such water service area when such service is requested from Covington.

3. In meeting this service commitment, Covington must ensure that this role does not place financial burdens on its retail customers for which they do not receive a corresponding benefit.

4. The District is in need of additional long-term, non-interruptible additional water supply to meet expected demand for water within its service area.

5. This Contract is intended to provide the District with the security of a long-term water supply commitment and to describe the terms and conditions associated with that commitment.

6. Under this Contract, Covington intends to provide wholesale water to the District at an equivalent level of service as it provides water to Covington's own distribution system.

7. Covington is willing to supply the District with wholesale water supply on the terms and conditions set forth in this Contract, and the District desires to purchase wholesale water supply from Covington on such terms and conditions.

NOW, THEREFORE, in consideration of the following terms and conditions, the Parties agree as follows:

SECTION I. DEFINITIONS

The meaning of certain words or terms, when used in this Contract, is as follows:

"Base Charge" means the monthly flat rate meter fee associated with a specific meter size and customer class.

"CCF" means one hundred cubic feet of water volume.

"Contract" means this document.

"Covington" means Covington Water District, a special purpose district existing and operating pursuant to Title 57 Revised Code of Washington.

"Covington Water System Comprehensive Plan" or "Covington Plan" means Covington's Water System Comprehensive Plan dated February 2007 and amendments thereto, prepared by Covington to comply with the requirements of WAC 248-54-580, and any successor regulations.

"Covington Water Supply System" means Covington's water supply system consisting of impounded water, supply and transmission mains, wells, pumps, treatment facilities, and all other facilities utilized in conveying water to Covington's retail service area, to the District and other Wholesale Customers.

"District" means King County Water District No. 111, a special purpose district existing and operating pursuant to Title 57 Revised Code of Washington.

"District Water Supply System" means the District's water supply system consisting of impounded water, supply and transmission mains, wells, pumps, treatment facilities, and all other facilities utilized in conveying water to the District's retail service area.

"District Water System Comprehensive Plan" or "District Plan" means the District's Water System Comprehensive Plan dated May 13, 2009 and amendments thereto, prepared by District to comply with the requirements of WAC 248-54-580, and any successor regulations.

"DOE" means the Washington State Department of Ecology.

"DOH" means the Washington State Department of Health.

"Effective Date" means the date whereby both Parties have approved and executed this Contract.

"Emergency" means an unforeseen event including, but not limited to, water shortages, power outages, a pump system failure, well system failure, aquifer failure or diminution, or other failure in the Covington Water Supply System which impairs the capacity or ability of Covington to maintain its system water capacity for public consumption or fire protection purposes. An emergency shall terminate at such time as the capacity of Covington's water system is restored to its pre-emergency status.

"General Manager" means either Covington's General Manager or any other title given to that person who maintains the authority to operate and manage the Covington Water Supply System, or the District's General Manager or any other title given to that person who maintains the authority to operate and manage the District Water Supply System, as the context indicates in this Contract.

"gpd" means gallons per day of water rate flow.

"gpm" means one gallon per minute of water rate flow.

"MG" or "mg" means one million gallons of water volume.

"MGD" or "mgd" means one million gallons per day of water rate flow.

"Service Connection" means the water meter(s) and appurtenances through which water is delivered from the Covington Water Supply System to the District's Water Supply System.

"System Development Charge (SDC)" means the amount that the District must pay Covington for connection to Covington's water system.

"Usage Charge" shall mean the rate in dollars per CCF paid for water purchased by the District from Covington.

"Wholesale Customer" means those customers who receive water from Covington for the purposes of reselling to others.

SECTION II. TERM OF CONTRACT AND GUARANTEES

II.A. Term of Contract

1. Term. This Contract shall commence on the Effective Date and shall continue until terminated in accordance with Section II.A.2. or as otherwise provided in this Contract.

2. Expiration and Termination. In the absence of agreement to the contrary, or termination as otherwise provided in this Contract, this Contract shall expire at 12:00 a.m. (midnight) on January 1, 2057 ("Expiration Date"), provided, at least three (3) years prior to the Expiration Date, either Party may notify the other Party in writing if the Party intends to (a) let the Contract expire and terminate on the Expiration Date, or (b) negotiate changes in the terms and conditions of the Contract and renew and extend the Contract. If neither Party provides notice to the other Party as provided in Section II.A.2(a) or (b) herein, the Contract shall automatically be extended for an additional five (5) year term on its existing terms and conditions commencing from the Expiration Date set forth above, subject to the three (3) year notice provision set forth herein prior to any new Expiration Date, and shall continue thereafter until the Contract is terminated or expires according to its terms.

3. Periodic Review and Right to Change Certain Terms and Conditions. The Parties may review and request changes to the terms and conditions governing the sale of water hereunder to take effect on January 1, 2025, and January 1, 2035, as follows. On or before January 1, 2024, and then again on or before January 1, 2034, either Party may provide the other Party with a written proposal to amend the Contract terms. The Parties shall then meet and consider the proposal. If the Parties agree to the proposal prior to January 1, 2025 and January 1, 2034, respectively, a written amendment to this Contract shall be approved and executed by both Parties and this Contract shall be amended accordingly.

II.B. Agreement to Supply and Purchase Water

1. General. For the term of this Contract, Covington agrees to furnish to the District the requested quantity of water on a non-interruptible basis of a quality that will satisfy all requirements of the laws of the Federal Safe Drinking Water Act as amended, and the requirements or regulations of the Washington State Department of Health ("DOH"), and in accordance with the terms and conditions of this Contract.

2. Water Quantity.

   A. Water Supply Quantities. Commencing on January 1, 2017, Covington agrees to sell to the District, and the District agrees to buy from Covington a minimum of seven hundred fifty thousand (750,000) gpd and, at the District's option, up to a maximum of one million (1,000,000) gpd for the time period of October 1 through May 31, and a minimum of one million (1,000,000) gpd and, at the District's option up to a maximum of one million two hundred thousand (1,200,000) gpd for the time period of June 1 through September 30; provided, if Covington fails to provide the District's minimum water supply requirements as set forth in this Section II.B.2., the District shall only be required to pay Covington for the water supply Covington actually supplies to the District. Water supply quantities shall be delivered by Covington to the District at a constant rate of flow based on the requested and scheduled gpd. Covington's obligation to deliver the reserved water supply to the District shall arise and be a continuing obligation beginning as of January 1, 2017 until the expiration or termination of this Contract.

   B. Notice of Water Supply Quantity Requirements. The District shall endeavor to give Covington at least forty eight (48) hours prior written notice of the District's projected water quantity needs over the following seven (7) day period to allow Covington to plan to provide such District water supply requirements and operate the Covington Water Supply System accordingly.

3. Wholesale Water Rate/Base Charge. The wholesale water rate ("Usage Charge") for the water Covington agrees to supply the District pursuant to this Contract shall be priced at the wholesale water service rate per CCF as set forth on **Exhibit A** attached hereto and incorporated herein in full by this reference, as adjusted annually effective January 1 based on the annual percentage of increase in the Construction Cost Index published in November each year by the Engineering News Record (ENR) for the Seattle Index (Index) measured from the Index published in November of the current year to November of the previous year.

The District shall also pay Covington a Base Charge of Five Hundred Fifteen Dollars and Sixty-Five Cents ($515.65) on a monthly basis payable at the time the District makes payment to Covington for each monthly billing to the District from Covington as provided in Section VI.B.1. herein. The Base Charge shall be adjusted annually in the same manner as the Usage Charge.

4. Assumption or Transfer of Responsibilities. In the event all or any portion of the District's corporate area and service responsibilities are assumed by or are transferred to another governmental entity or utility, then the assuming or transfer utility shall be responsible to pay Covington (at the then applicable Usage Charge as adjusted pursuant to **Exhibit A**) for the remaining term of the Contract for such utility's share of the District's water supply required to be purchased from Covington based on the percentage of such utility's assumption or transfer of the District's corporate area. For example, if such utility assumes eighty percent (80%) of the District's corporate area, the utility shall be required to pay Covington on a monthly basis for eighty percent (80%) of the minimum water supply the District is required to purchase from Covington. In addition, at the time of any such assumption or transfer, the utility shall be required to pay Covington in full any remaining balance of the SDC owing to Covington as referenced in Section II.C. herein, and such remaining SDC shall not be paid in monthly installments to Covington.

5. Termination or Reduction of Obligation to Purchase Water Supply. Any reduction of the District's minimum water purchase requirements referenced in Section II.B.2. above, and any increase in the District's maximum water purchase allowance in Section II.B.2. above, shall require the written mutual approval of the Parties on such terms and conditions as agreed to by the Parties.

II.C. System Development Charge

In order for the District to pay its equitable share of the cost of Covington's existing and future Water Supply System necessary to provide water supply to the District, the District shall pay Covington a System Development Charge ("SDC") of Nine Hundred Eight Thousand Nine Hundred Twelve Dollars ($908,912.00), payable, at the District's option, by lump sum payment to Covington within ninety (90) days of the Effective Date of this Contract, or, alternatively, by monthly payments of Five Thousand One Hundred Fifty Five Dollars and Thirty One Cents ($5,155.31) for twenty (20) years commencing January 1, 2017, based on an annual interest rate of three and one-quarter percent (3.25%), as set forth on **Exhibit B** "Monthly SDC Payments" attached hereto and incorporated herein by this reference, provided the District shall have the right to pay off the remaining balance of the SDC owing Covington at any time without further interest payment or penalty. The District shall pay SDCs owing to Covington on a monthly basis at the time the District is required to pay Covington the Usage Charge pursuant to this Contract for water supply provided by Covington to the District.

II.D. Continuity of Service within the Term of the Contract

1. Parity of Service. Covington shall provide wholesale water to District at an equivalent level of service that it provides to Covington's own distribution system.

2. Emergency Curtailment Measures. In the event of a general emergency or weather-related water shortage affecting the entire Covington Water Supply System, and Covington determines to place mandatory water use restrictions upon its retail water customers, the District shall reduce the amount of water purchased from Covington by ten percent (10%). If Covington places emergency water use restrictions upon its retail customers, the District shall reduce the amount of water purchased from Covington by twenty-five percent (25%). In either situation, the reduction of water purchased from Covington will last for the duration of the general emergency or weather-related water shortage affecting the Covington Water Supply System until Covington's mandatory or emergency water use restrictions are terminated, provided the District shall only be required to pay Covington for the water supply actually received by the District during such emergency, and the District's obligation to purchase a minimum amount of water supply from Covington during such emergency shall be revised to account for the water supply actually received by the District during such emergency.

3. Other Emergencies. Covington may temporarily interrupt or reduce deliveries of water to District if Covington determines that such interruption or reduction is necessary or reasonable in case of system emergencies or in order to install equipment, make repairs, replacements, investigations and inspections or perform other maintenance work on the Covington Water Supply System. Except in cases of emergency, and in order that District's operations will not be unreasonably interrupted, Covington shall give District at least five (5) days prior written notice of any such interruption or reduction, the reasons for and the probable duration. Covington shall use its best efforts to minimize service interruptions to District.

4. Waiver of Charges. In the event of interruption or reduction in water supply from Covington to the District, the District shall only be required to pay Covington for the water supply actually received by the District, and shall not be required to pay Covington for the minimum water supply the District is required to purchase from Covington for the period of interruption or reduction of water supply from Covington, and such minimum purchase requirement and related District obligation to pay Covington for such water supply shall be revised to account for the water supply actually received by the District during such interruption or reduction in water supply.

II.E. Water Quality

1. Covington Water Supply System. Covington shall be responsible for water quality within the Covington Water Supply System as set forth below. Covington shall construct, operate and maintain water quality treatment facilities and use its best efforts to carry out its water quality responsibilities in the most cost-effective manner for the region.

2. Applicable Standards. Covington shall at all times during the term hereof deliver water to District's system of a quality that meets or exceeds all applicable Federal, State and local regulations as the same may change from time to time.

3. Distribution Systems. District shall be responsible for compliance with all applicable federal, State and local water quality laws and regulations applicable to water in its distribution system including any water from supply sources that it may own or operate.

4. Monitoring. Water quality monitoring shall be performed by Covington in the Covington Water Supply System and by District in the District Water Supply System to comply with federal, State and local water quality regulations, to verify the condition of water that is passing from one entity to the other, to enhance system operation, and to document the aesthetic qualities of the water.

5. Water Quality Notifications to Customers (Consumer Confidence Reports). Each Party shall prepare at its sole cost periodic water quality notifications to its respective retail customers and regulatory agencies as required by law. Covington shall provide District all water quality data in a timely manner regarding the Covington Water Supply System that District may be legally required to report in such notices.

6. Water Quality Testing. Prior to the introduction of Covington water supply into the District's water distribution system, the District shall undertake at its sole cost a study using customary and reasonable water quality criteria as approved by DOH to insure the compatibility of Covington water supply with the District's existing water supply. The District shall provide Covington and DOH with satisfactory results from a blending study to determine the compatibility of the source with existing sources already in the District's water system. District shall obtain all necessary and appropriate regulatory permits, reviews and approvals for rights to and operational use of Covington water supply.

7. Water System Comprehensive Plan Amendment. Each Party shall amend its respective Water System Comprehensive Plan as appropriate to provide for and authorize this Contract, and shall apply for and obtain at their respective sole cost and expense the approval of all public agencies with jurisdiction with respect to the subject matter of this Contract, including DOH and DOE.

SECTION III. SERVICE CONNECTIONS; CONDITIONS OF SERVICE

III.A. Service Connections/Flow Meter

1. Wholesale Supply Intertie Connection. The District shall have the right to receive water purchased from Covington pursuant to this Contract at the SE 288th Street intertie between the Covington Water Supply System and the District Water Supply System depicted on **Exhibit C** attached hereto and incorporated herein by this reference.

2. SE 288th Street Intertie. The District shall install, at its sole cost and expense, and convey to Covington by bill of sale in the form attached hereto as **Exhibit D** and incorporated herein by

the reference (the "District Bill of Sale"), and Covington shall own, operate and maintain, a flow control station and flow meter on SE 288th Street located near the west right-of-way line of State Highway 18 ("SR 18") ("SE 288th Street Intertie"). The flow control station and flow meter shall be installed pursuant to a design and in a location as approved by Covington in writing to the District. The flow meter shall be used to account for and total the water supply provided to the District at the SE 288th Street Intertie. The flow meter shall measure the rate of flow in gallons per minute and total the water received through such flow meter in gallons. The SE 288th Street Intertie shall be the primary source of water supply to be provided to the District pursuant to this Contract, and it is the Parties' intent that Covington provide water to the District that Covington obtains from the Regional Water Supply System (RWSS) through the SE 288th Street Intertie, provided the Parties acknowledge that during emergencies, as defined in Section II.D.2 and II.D.3 herein, Covington may not have the ability to continuously provide RWSS water to the District through the SE 288th Street Intertie. If Covington is unable to continuously provide RWSS water to the District through the SE 288th Street Intertie, Covington shall give the District as much notice in writing as reasonably possible to allow the District to make any adjustments or modifications to the District Water Supply System to manage the water supply received from Covington.

3. SE 272nd Street Intertie. The Parties currently maintain an intertie connection located at 15903 SE 272nd St. ("SE 272nd Street Intertie") as depicted on **Exhibit C** between their respective water supply systems pursuant to an Emergency Water Supply Agreement dated the 3rd day of September, 2015 ("Emergency Water Supply Agreement"). Covington and the District have discussed the possibility of Covington providing wholesale water supply under this Contract through the SE 272nd Street Intertie, in addition to the SE 288th Street Intertie. However, due to the fact that the SE 272nd Street Intertie is in need of certain upgrades which will require time for the Parties to review and analyze, the Parties have agreed to continue their review and discussions relating to the possible future delivery of water pursuant to this Contract through the SE 272nd Street Intertie. If the Parties reach an agreement on the terms and conditions pursuant to which wholesale water can be supplied by Covington through the SE 272nd Street Intertie, the Parties will enter into a formal amendment to this Contract. Until that time, the Parties agree that the District will be able to receive water from Covington through the SE 272nd Street Intertie under the terms and conditions contained in the Emergency Water Supply Agreement. In addition, the Parties agree that if Covington is unable to provide the quantities of wholesale water requested by the District under this Contract pursuant to Section II.B.2 above through the SE 288th Street Intertie due to an Emergency as defined in Section I above, then the District shall be entitled to receive the wholesale water supply contemplated by this Contract through the SE 272nd Street Intertie and the rate charged for such water shall be the rate provided for under this Contract and not the higher rate set forth in the Emergency Water Supply Agreement.

4. Minimum Hydraulic Gradient. Covington shall maintain an approximate minimum hydraulic grade line ("HGL") at a maximum flow rate in amounts at the interties as follows:

    a. SE 288th Street Intertie: Covington shall provide water supply to the Intertie at six hundred sixty (660) feet of HGL.

b. SE 272nd Street Intertie (emergency use only): Covington shall provide water supply to the Intertie at six hundred sixty (660) feet of HGL.

Such gradients and locations shall be contained in Covington's and District's future water system comprehensive plans. Covington shall provide, operate and maintain its facilities necessary to provide such minimum hydraulic grade line obligations. If Covington determines that a project resulting in the modification of such minimum gradient would benefit the Covington Water Supply System as a whole, the minimum hydraulic gradient may be modified by Covington by mutual agreement of the Parties on such terms and conditions as are appropriate.

5. Additional Service Connections. Additional service connections between the District's and Covington's water systems or adjusted minimum gradients may be established from time to time by mutual agreement of the Parties. **Exhibit C** shall be appropriately amended to reflect such additions or adjustments.

6. Meter Calibration. Covington shall calibrate the flow meter for the SE 288th Street Intertie at least one time every five (5) years at its sole cost and expense. If the District has a reasonable basis to believe the flow meter needs to be calibrated earlier than the regular five year period, the District may request that the flow meter be calibrated. However, the District will be solely responsible for the costs incurred by Covington for such calibration. Representatives of each Party shall have the right to observe the calibration. Should a meter calibration reflect meter variation greater than three percent (3%) of the measured meter reading, either Party may request a billing adjustment for the six (6) months previous to the calibration using the meter variation percentage and shall be entitled to such billing adjustment. Covington shall maintain, repair and replace the metering equipment as necessary to insure the meters' accuracy.

7. Flow Control/Pressure Reducing Facilities. The District may install, own, operate and maintain at the District's sole cost and expense flow control and pressure reducing facilities on the District side of the SE 288th Street Intertie as necessary to regulate the flow of water received from Covington pursuant to this Contract.

8. Access. The Parties shall have equal access to the SE 288th Street Intertie for the purpose of reading the flow control station and flow meter, and for the purpose of monitoring telemetry equipment. Covington hereby grants the District a right of access to the SE 288th Street Intertie for the duration of this Contract.

III.B. Transfer of Water Facilities/Assets to Facilitate Water Purchase and Delivery

1. Transfer of SE 288th Street 16 Inch Transmission Main by Covington to District. In consideration of the District's purchase of wholesale water supply from Covington as provided in this Contract, and to facilitate Covington's supply of water to the District at the SE 288th Street Intertie as provided in this Contract, Covington shall transfer and convey all ownership interest Covington has in the sixteen (16) inch water transmission main located in SE 288th Street (the "SE 288th Street Transmission Main") as depicted on **Exhibit E** attached

hereto and incorporated herein by this reference to the District within thirty (30) days of the Effective Date of this Contract by bill of sale in the form attached hereto as **Exhibit F** and incorporated herein by this reference (the "Covington Bill of Sale"). Covington covenants and warrants that it is the lawful owner of the SE 288th Street Transmission Main and that it has the right to transfer the SE 288th Street Transmission Main to the District. Covington agrees to defend the District, its successors and assigns, against any and all persons or entities that may assert a claim of ownership in the SE 288th Street Transmission Main. Except as otherwise specifically provided herein, the transfer of the SE 288th Transmission Main shall be without any warranties, express or implied, and the District agrees to accept the SE 288th Street Transmission Main in its current "As-Is, Where-Is" condition.

2. Transfer of Covington Interest in 132nd Avenue SE 16 Inch Transmission Main by Covington to District. In consideration of the District's purchase of wholesale water supply from Covington as provided in this Contract, and to facilitate Covington's supply of water to the District as provided in this Contract, Covington shall transfer and convey its fifty percent (50%) ownership interest in the sixteen (16) inch water transmission main located in 132nd Avenue SE between SE 288th Avenue and SE 296th Street (extended) (the "132nd Avenue SE Transmission Main") as depicted on **Exhibit E** attached hereto and incorporated herein by this reference to the District within thirty (30) days of the Effective Date of this Contract by the Covington Bill of Sale in the form attached hereto as **Exhibit F**. Covington covenants and warrants that it is the lawful owner of a fifty percent (50%) interest in the 132nd Avenue SE Transmission Main and that it has the right to transfer its ownership interest in the 132nd Avenue SE Transmission Main to the District. Covington agrees to defend the District, its successors and assigns, against any and all persons or entities that may assert a claim of ownership in the 132nd Avenue SE Transmission Main. Except as otherwise specifically provided herein, the transfer of the 132nd Avenue SE Transmission Main shall be without any warranties, express or implied, and the District agrees to accept the 132nd Avenue SE Transmission Main in its current "As-Is, Where-Is" condition.

3. Transfer of All Covington Interest in Vault, Meter and Appurtenances located at Joint Flow Control and Meter Station located at Intersection of SE 288th Street and 132nd Avenue SE by Covington to District. In consideration of the District's purchase of wholesale water supply from Covington as provided in this Contract, and to facilitate Covington's supply of water to the District as provided in this Contract, Covington shall transfer and quit claim any and all ownership interest Covington may have in the vault, meter and appurtenances located at Joint Flow Control and Meter Station located at the intersection of SE 288th Street and 132nd Avenue SE (collectively, the "Joint Flow Control and Meter Station") as depicted on **Exhibit E** attached hereto to the District within thirty (30) days of the Effective Date of this Contract by the Covington Bill of Sale in the form attached hereto as **Exhibit G**. The transfer of the Joint Flow Control and Meter Station shall be without any warranties, express or implied, and the District agrees to accept the Joint Flow Control and Meter Station in their current "As-Is, Where-Is" condition.

4. Assignment of Related Easements and Transfer of Related Documentation related to Asset Transfer. The Transfer of Covington's ownership interest in the SE 288th Street Transmission Main, the 132nd Avenue SE Transmission Main, and the Joint Flow Control

and Meter Station to the District is collectively referred to herein as the "Asset Transfer" and such facilities are collectively referred to herein as the "Transferred Assets". At the time Covington performs the Asset Transfer, Covington shall convey and assign to the District all of its rights, title and interest to the Transferred Assets, including all easement and franchise rights related to the location of such facilities, mapping and as-built designs and drawings and other documentation associated with such facilities.

IV. Retail Rate-Setting

Each Party shall have sole authority for establishing retail rates, connection charges and other fees and charges within its respective jurisdiction.

V. Submittal of District Comprehensive Plans

Within thirty (30) days of the Effective Date of this Contract, District shall provide a copy of its current Water System Comprehensive Plan, including any amendments, to Covington for reference or inclusion in Covington's Water System Comprehensive Plan in accordance with DOH requirements.

SECTION VI. PAYMENT FOR WATER PURCHASED

VI.A. Determination of Water Purchased

Commencing on and after January 1, 2017, Covington shall read the flow meter at the SE 288th Street Intertie on or about the thirtieth (30th) day of each month. The gallons of water totaled for the flow meters shall be converted to CCF by a calculation methodology mutually agreed to by the Parties and shall include conversion units that are published and widely accepted by the engineering and public works industry, including American Water Works Association ("AWWA") standards and practices. The payment for water purchased by the District from Covington pursuant to this Contract shall be calculated by the total CCF of water purchased by the District each month multiplied by the "Total Cost per CCF" charge for the year in which the water was purchased as set forth on **Exhibit A** attached hereto.

VI.B. Payment of Money Due Covington

1. Monthly Billings and Payment. On or before the fifteenth (15th) day of each calendar month, Covington shall bill the District for the water supply provided by Covington to the District during the prior month. Such billing shall also include the data and meter reading information taken from the flow meter related to each such billing. A bill that has been properly addressed and deposited in the United States mail shall be deemed to be presented to the District for payment. The District's payment in full of the monthly bill shall be due and payable at Covington's business office thirty (30) days after the deposit of the District bill in the United States mail or the bill is sent electronically to the District ("Due Date"). Any bill not paid by the Due Date shall be past due. The District shall pay interest and/or penalties on any past due bill at the rate provided in RCW 57.08.081, or as such statute may

be modified, amended or superseded, for every month or portion of a month that the past due amount remains unpaid, except for any disputed amounts.

2. Temporary Lapses in Water Meter Data. If metered water flow is incomplete or inaccurate for any period of time, Covington may bill the District for such period based on estimated water flow using any of the following methods: historical District flows, historical relationship of District flows, or surrogate District flows determined and agreed upon by the Parties. Covington shall provide the District documentation of the basis for the estimated water flow in any such instance.

3. Disputed Bills. If the District believes that a bill from Covington is in error, the District shall notify Covington and provide supporting documents within the thirty (30) days after Covington's transmittal of the bill to the District. Notice of disputed bills shall include payment of undisputed amounts and fifty percent (50%) of disputed amounts. Within ten (10) days thereafter the Parties shall meet to attempt to resolve the dispute. If the dispute cannot be resolved, then the Parties shall proceed with dispute resolution under Section VII of this Contract.

VI.C. Penalties for Late Payment and Interest on Refunds

All late payments, and any refund of an amount in dispute that was paid by the District under protest, shall accrue interest at the rate established by Covington as provided in RCW 57.08.081, or as such statute may be modified, amended or superseded.

VI.D. Disputes

Either Party may dispute the accuracy of any portion of charges billed to the District by taking the following actions within the thirty (30) day payment period by notifying the other Party in writing of the specific nature of the dispute and the District paying fifty percent (50%) of the undisputed portion of the charges.

Covington shall consider and decide any billing dispute in a reasonable and timely manner. Any billing disputes that remain after such consideration shall be reconciled pursuant to the dispute resolution procedures of this Contract.

SECTION VII. DISPUTE RESOLUTION

1. Applicable Law. This Contract, including all matters of interpretation, validity and performance, shall be governed and enforced in accordance with the laws of the State of Washington.

2. Informal Resolution of Disputes. Any dispute arising out of this Contract, including without limitation, issues relating to the validity or enforcement of the Contract and billing disputes under Section VI shall be referred to representatives of the Parties, who shall meet and make a good faith effort to resolve the dispute among them.

3. Notice of Formal Dispute. If within thirty (30) days the Parties are unable to resolve the dispute informally, the Party raising the issue in dispute may invoke formal dispute resolution by providing the other Party with written notice of the dispute, including a brief description of the nature of the dispute and the Party's proposed resolution of the dispute. Notice given by the District of a billing dispute under Section VI shall satisfy the notice requirement for billing disputes.

4. Alternative Dispute Resolution. Within fifteen (15) days after notice is given the Parties shall meet to explore whether the dispute should be resolved by mediation or arbitration. By mutual agreement, the Parties may submit the dispute to non-binding mediation or to binding arbitration. If the Parties agree on arbitration, the arbitration shall be conducted in accordance with this subsection.

   4.1 Any agreement to arbitrate shall be in writing signed by the Parties, shall conform to the requirements of this subsection, and shall specify the procedures governing the arbitration.

   4.2 The arbitrator or arbitration panel selected shall have the power and authority to grant legal and equitable relief in accordance with Washington law and the provisions of this Contract.

   4.3 The decision of the arbitrator or of a majority of the arbitration panel members shall be final and binding. The costs of arbitration shall be borne equally by the Parties, unless the arbitrator or arbitration panel rules otherwise.

5. Litigation of Disputes. In the event that the dispute is not resolved informally or by mediation and the Parties do not agree to arbitration, either Party may commence a suit in King County Superior Court on a claim or claims related to the dispute.

6. Emergency Relief. Notwithstanding the other provisions of this Section VII, either Party may seek emergency or temporary equitable relief in King County Superior Court concerning disputes governed by this Section VII if imminent and irreparable harm to the Party will likely result if action is delayed until completion of the dispute resolution procedures. The King County Superior Court may grant such temporary relief as may be required to preserve the status quo or otherwise prevent irreparable harm while the Parties pursue resolution of the dispute. The Court may require the Party requesting relief to give such security as the Court deems necessary for the payment of costs and damages that may be incurred by the other Party resulting from temporary relief wrongfully granted.

SECTION VIII. MISCELLANEOUS

VIII.A. Notification

Whenever written notice is required by this contract, that notice shall be given to the following representatives by actual delivery or by the United States mail (registered or certified with return

receipt requested,) addressed to the respective Party at the following addresses or a different address hereafter designated in writing by the Party):

COVINGTON	DISTRICT
General Manager	General Manager
Covington Water District	King County Water District No. 111
18631 SE 300th Place	27224 144th Ave SE
Covington, WA 98042	Kent, WA 98042

The date of giving such notice shall be deemed to be the postmarked date of mailing.

VIII.B. Severability

The purpose of this Contract is to provide for long-term water supply planning and certainty for both Covington and District through adoption of orderly plans calling for the expenditure of significant sums of money for regional water supply and transmission facilities. It is the intent of the Parties that, if any provision of this contract or its application is held by a court of competent jurisdiction to be illegal, invalid, or void, the validity of the remaining provisions of this Contract or its application to other entities, or circumstances shall not be affected. The remaining provisions shall continue in full force and effect, and the rights and obligations of the Parties shall be construed and enforced as if the Contract did not contain the particular invalid provision; provided, however, if the invalid provision or its application is found by a court of competent jurisdiction to be substantive and to render performance of the remaining provisions unworkable and non-feasible, is found to seriously affect the consideration and is inseparably connected to the remainder of the contract, the entire Contract shall be null and void.

VIII.C. Consent

Whenever it is provided in this Contract that the prior written consent or approval of either Party is required as a condition precedent to any actions, in each such instance said consent or approval shall not be unreasonably withheld, and in each such instance where prior consent is sought, failure of the Party to respond in writing within sixty (60) days of the request shall be deemed as that Party's consent or approval unless expressly stated herein. This provision does not apply to requests for amendments of this Contract.

VIII.D. Emergency Situations

Nothing in this Contract shall be deemed to preclude either Party from taking necessary action to maintain or restore water supply in emergency situations and such action shall not be deemed a violation of this Contract.

VIII.E. No Joint Venture - Individual Liability

This is not an agreement of joint venture or partnership, and no provision of this Contract shall be construed so as to make the District a partner or joint venturer with Covington. Neither Party

is an agent of the other. Neither Covington nor District shall be liable for the acts of the other in any representative capacity whatsoever.

VIII.F. Complete Agreement

This Contract represents the entire agreement between the Parties concerning the subject matter hereof. This Contract may not be amended except as provided herein.

VIII.G. Venue, Jurisdiction and Specific Performance

In the event of litigation between the Parties, venue and jurisdiction shall lie with the King County Superior Court of the State of Washington. The Parties shall be entitled to specific performance of the terms hereof.

VIII.H. Default

In the event of default of any provision of the Contract, the non-defaulting Party shall issue written notice to the other Party setting forth the nature of the default. If the default is for a monetary payment due hereunder, the defaulting Party shall have thirty (30) days to cure the default. In the event of other defaults, the defaulting Party shall use its best efforts to cure the default within ninety (90) days. If such default cannot be reasonably cured within such ninety (90) day period, the defaulting Party shall, upon written request prior to the expiration of the ninety (90) day period be granted an additional sixty (60) days to cure the default.

VIII.I. Force Majeure

The time periods for Covington's performance under any provisions of this Contract shall be extended for a reasonable period of time during which Covington's performance is prevented, in good faith, due to fire, flood, earthquake, lockouts, strikes, embargoes, acts of God, war and civil disobedience. If this provision is invoked, Covington agrees to immediately take all reasonable steps to alleviate, cure, minimize or avoid the cause preventing such performance, at its sole expense.

VIII.J. Successors

This Contract shall inure to the benefit of and be binding upon the Parties and their successors and assigns.

VIII.K. Exhibits

Exhibits A through G are attached hereto and are hereby incorporated by reference as if set forth in full herein:

Exhibit A:	Monthly Wholesale Water Rates
Exhibit B:	Monthly SDC Payments
Exhibit C:	Depiction of Interties
Exhibit D:	District Form Bill of Sale to Covington
Exhibit E:	Depiction of Transmission Mains to be Transferred
Exhibit F:	Covington Form Bill of Sale to District for Transmission Mains
Exhibit G:	Covington Form Bill of Sale to District for Joint Flow Control and Meter Station

VIII.L. Indemnification

1. District Indemnification. The District shall indemnify, defend, and hold harmless Covington, its officers, agents, and employees from all suits, claims, or liabilities of any nature, including attorneys' fees, costs, and expenses, for or on account of injuries or damages sustained by any person or property, resulting from acts or omissions of and to the extent harm is caused by the District, its agents or employees related to the performance of this Contract. If suit in respect to the above is filed, the District shall defend the suit at the District's own cost and expense, and if judgment is rendered or settlement made requiring payment by Covington, its officers, agents or employees, the District shall pay the same. Should a court of competent jurisdiction determine that this indemnity agreement is subject to RCW 4.24.115, then in the event of liability for damages arising out of bodily injury to persons or damages to property caused or resulting from the concurrent negligence of the District and Covington, its officials, officers, employees agents, the District's liability hereunder shall only be to the extent of the District's negligence. It is further specifically and expressly understood that the indemnification provided herein constitutes the District's waiver of immunity under industrial insurance, Title 51 RCW, solely for the purposes of this indemnification. This waiver has been mutually negotiated by the Parties.

2. Covington Indemnification. Covington shall indemnify, defend, and hold harmless the District, its officers, agents, and employees from all suits, claims, or liabilities of any nature, including attorneys' fees, costs, and expenses, for or on account of injuries or damages sustained by any person or property, resulting from acts or omissions of and to the extent harm is caused by Covington, its agents or employees related to the performance of this Contract. If suit in respect to the above is filed, Covington shall defend the suit at Covington's own cost and expense, and if judgment is rendered or settlement made requiring payment by the District, its officers, agents or employees, Covington shall pay the same. Should a court of competent jurisdiction determine that this indemnity agreement is subject to RCW 4.24.115, then in the event of liability for damages arising out of bodily injury to persons or damages to property caused or resulting from the concurrent negligence of the District and Covington, it officials, officers, employees agents, Covington's liability hereunder shall only be to the extent of Covington's negligence. It is further specifically and expressly understood that the indemnification provided herein constitutes Covington's waiver of immunity under industrial insurance, Title 51 RCW, solely for the purposes of this indemnification. This waiver has been mutually negotiated by the Parties.

IN WITNESS WHEREOF, the Parties hereby execute this Contract as of the dates set forth below.

KING COUNTY WATER DISTRICT NO. 111

BY: William C. Hall

TITLE: General Manager

DATE 12/29/2015

AUTHORIZING LEGISLATION: RESOLUTION NO. 596-12-15

COVINGTON WATER DISTRICT

BY: [signature]

TITLE: General Manager

DATE 12/28/15

AUTHORIZING LEGISLATION: RESOLUTION NO. 4149

EXHIBIT A

Contract for Wholesale Supply of Water Between King County Water District No. 111 And Covington Water District

Monthly Wholesale Water Rates & Base Charges		
Year	Usage Charge per CCF	Base Charge
2017	$0.75	$515.65
2018	$0.75 x ENR*	$515.65 x ENR*
2019	2018 rate x ENR*	2018 rate x ENR*
2020	2019 rate x ENR*	2019 rate x ENR*
2021	2020 rate x ENR*	2020 rate x ENR*
2022	2021 rate x ENR*	2021 rate x ENR*
2023	2022 rate x ENR*	2022 rate x ENR*
2024	2023 rate x ENR*	2023 rate x ENR*
2025	2024 rate x ENR*	2024 rate x ENR*
2026	2025 rate x ENR*	2025 rate x ENR*
2027	2026 rate x ENR*	2026 rate x ENR*
2028	2027 rate x ENR*	2027 rate x ENR*
2029	2028 rate x ENR*	2028 rate x ENR*
2030	2029 rate x ENR*	2029 rate x ENR*
2031	2030 rate x ENR*	2030 rate x ENR*
2032	2031 rate x ENR*	2031 rate x ENR*
2033	2032 rate x ENR*	2032 rate x ENR*
2034	2033 rate x ENR*	2033 rate x ENR*
2035	2034 rate x ENR*	2034 rate x ENR*
2036	2035 rate x ENR*	2035 rate x ENR*
2037	2036 rate x ENR*	2036 rate x ENR*
2038	2037 rate x ENR*	2037 rate x ENR*
2039	2038 rate x ENR*	2038 rate x ENR*
2040	2039 rate x ENR*	2039 rate x ENR*
2041	2040 rate x ENR*	2040 rate x ENR*
2042	2041 rate x ENR*	2041 rate x ENR*
2043	2042 rate x ENR*	2042 rate x ENR*
2044	2043 rate x ENR*	2043 rate x ENR*
2045	2044 rate x ENR*	2044 rate x ENR*
2046	2045 rate x ENR*	2045 rate x ENR*
2047	2046 rate x ENR*	2046 rate x ENR*
2048	2047 rate x ENR*	2047 rate x ENR*
2049	2048 rate x ENR*	2048 rate x ENR*
2050	2049 rate x ENR*	2049 rate x ENR*

2051	2050 rate x ENR*	2050 rate x ENR*
2052	2051 rate x ENR*	2051 rate x ENR*
2053	2052 rate x ENR*	2052 rate x ENR*
2054	2053 rate x ENR*	2053 rate x ENR*
2055	2054 rate x ENR*	2054 rate x ENR*
2056	2055 rate x ENR*	2055 rate x ENR*

*ENR means the annual percentage of increase in the Construction Cost Index published in November each year by the Engineering News Record (ENR) for the Seattle Index (Index) measured from the Index published in November of the current year to November of the previous year. For purposes of this calculation, the applicable ENR number shall follow the whole number 1. For example, if the applicable ENR increase for a year is 3%, the multiplier shall be reflected as 1.03.

EXHIBIT B

Contract for Wholesale Supply of Water
Between
King County Water District No. 111
And
Covington Water District
System Development Charge Payment Schedule

Data	
Original Principal	$ 908,912
Payment Term (Years)	20
Annual Interest Rate	3.25%
Payments per Year	12
Payment	$5,155.31

Date	Month	Payment	Interest	Principal	Balance
	0				$908,912.00
1/1/2017	1	$5,155.31	$2,461.64	$2,693.67	$906,218.33
2/1/2017	2	$5,155.31	$2,454.34	$2,700.97	$903,517.36
3/1/2017	3	$5,155.31	$2,447.03	$2,708.28	$900,809.07
4/1/2017	4	$5,155.31	$2,439.69	$2,715.62	$898,093.45
5/1/2017	5	$5,155.31	$2,432.34	$2,722.97	$895,370.48
6/1/2017	6	$5,155.31	$2,424.96	$2,730.35	$892,640.13
7/1/2017	7	$5,155.31	$2,417.57	$2,737.74	$889,902.39
8/1/2017	8	$5,155.31	$2,410.15	$2,745.16	$887,157.23
9/1/2017	9	$5,155.31	$2,402.72	$2,752.59	$884,404.64
10/1/2017	10	$5,155.31	$2,395.26	$2,760.05	$881,644.59
11/1/2017	11	$5,155.31	$2,387.79	$2,767.52	$878,877.07
12/1/2017	12	$5,155.31	$2,380.29	$2,775.02	$876,102.05
1/1/2018	13	$5,155.31	$2,372.78	$2,782.53	$873,319.51
2/1/2018	14	$5,155.31	$2,365.24	$2,790.07	$870,529.44
3/1/2018	15	$5,155.31	$2,357.68	$2,797.63	$867,731.82
4/1/2018	16	$5,155.31	$2,350.11	$2,805.20	$864,926.61
5/1/2018	17	$5,155.31	$2,342.51	$2,812.80	$862,113.81

Date	Month	Payment	Interest	Principal	Balance
6/1/2018	18	$5,155.31	$2,334.89	$2,820.42	$859,293.40
7/1/2018	19	$5,155.31	$2,327.25	$2,828.06	$856,465.34
8/1/2018	20	$5,155.31	$2,319.59	$2,835.72	$853,629.62
9/1/2018	21	$5,155.31	$2,311.91	$2,843.40	$850,786.22
10/1/2018	22	$5,155.31	$2,304.21	$2,851.10	$847,935.13
11/1/2018	23	$5,155.31	$2,296.49	$2,858.82	$845,076.31
12/1/2018	24	$5,155.31	$2,288.75	$2,866.56	$842,209.75
1/1/2019	25	$5,155.31	$2,280.98	$2,874.33	$839,335.42
2/1/2019	26	$5,155.31	$2,273.20	$2,882.11	$836,453.31
3/1/2019	27	$5,155.31	$2,265.39	$2,889.92	$833,563.39
4/1/2019	28	$5,155.31	$2,257.57	$2,897.74	$830,665.65
5/1/2019	29	$5,155.31	$2,249.72	$2,905.59	$827,760.06
6/1/2019	30	$5,155.31	$2,241.85	$2,913.46	$824,846.60
7/1/2019	31	$5,155.31	$2,233.96	$2,921.35	$821,925.25
8/1/2019	32	$5,155.31	$2,226.05	$2,929.26	$818,995.99
9/1/2019	33	$5,155.31	$2,218.11	$2,937.20	$816,058.79
10/1/2019	34	$5,155.31	$2,210.16	$2,945.15	$813,113.64
11/1/2019	35	$5,155.31	$2,202.18	$2,953.13	$810,160.51
12/1/2019	36	$5,155.31	$2,194.18	$2,961.13	$807,199.39
1/1/2020	37	$5,155.31	$2,186.17	$2,969.15	$804,230.24
2/1/2020	38	$5,155.31	$2,178.12	$2,977.19	$801,253.05
3/1/2020	39	$5,155.31	$2,170.06	$2,985.25	$798,267.80
4/1/2020	40	$5,155.31	$2,161.98	$2,993.34	$795,274.47
5/1/2020	41	$5,155.31	$2,153.87	$3,001.44	$792,273.03
6/1/2020	42	$5,155.31	$2,145.74	$3,009.57	$789,263.46
7/1/2020	43	$5,155.31	$2,137.59	$3,017.72	$786,245.73
8/1/2020	44	$5,155.31	$2,129.42	$3,025.89	$783,219.84
9/1/2020	45	$5,155.31	$2,121.22	$3,034.09	$780,185.75
10/1/2020	46	$5,155.31	$2,113.00	$3,042.31	$777,143.44
11/1/2020	47	$5,155.31	$2,104.76	$3,050.55	$774,092.89
12/1/2020	48	$5,155.31	$2,096.50	$3,058.81	$771,034.09
1/1/2021	49	$5,155.31	$2,088.22	$3,067.09	$767,966.99
2/1/2021	50	$5,155.31	$2,079.91	$3,075.40	$764,891.59
3/1/2021	51	$5,155.31	$2,071.58	$3,083.73	$761,807.86
4/1/2021	52	$5,155.31	$2,063.23	$3,092.08	$758,715.78
5/1/2021	53	$5,155.31	$2,054.86	$3,100.46	$755,615.33
6/1/2021	54	$5,155.31	$2,046.46	$3,108.85	$752,506.48
7/1/2021	55	$5,155.31	$2,038.04	$3,117.27	$749,389.20
8/1/2021	56	$5,155.31	$2,029.60	$3,125.71	$746,263.49
9/1/2021	57	$5,155.31	$2,021.13	$3,134.18	$743,129.31

Date	Month	Payment	Interest	Principal	Balance
10/1/2021	58	$5,155.31	$2,012.64	$3,142.67	$739,986.64
11/1/2021	59	$5,155.31	$2,004.13	$3,151.18	$736,835.46
12/1/2021	60	$5,155.31	$1,995.60	$3,159.71	$733,675.75
1/1/2022	61	$5,155.31	$1,987.04	$3,168.27	$730,507.48
2/1/2022	62	$5,155.31	$1,978.46	$3,176.85	$727,330.62
3/1/2022	63	$5,155.31	$1,969.85	$3,185.46	$724,145.17
4/1/2022	64	$5,155.31	$1,961.23	$3,194.08	$720,951.08
5/1/2022	65	$5,155.31	$1,952.58	$3,202.73	$717,748.35
6/1/2022	66	$5,155.31	$1,943.90	$3,211.41	$714,536.94
7/1/2022	67	$5,155.31	$1,935.20	$3,220.11	$711,316.83
8/1/2022	68	$5,155.31	$1,926.48	$3,228.83	$708,088.01
9/1/2022	69	$5,155.31	$1,917.74	$3,237.57	$704,850.43
10/1/2022	70	$5,155.31	$1,908.97	$3,246.34	$701,604.09
11/1/2022	71	$5,155.31	$1,900.18	$3,255.13	$698,348.96
12/1/2022	72	$5,155.31	$1,891.36	$3,263.95	$695,085.01
1/1/2023	73	$5,155.31	$1,882.52	$3,272.79	$691,812.22
2/1/2023	74	$5,155.31	$1,873.66	$3,281.65	$688,530.57
3/1/2023	75	$5,155.31	$1,864.77	$3,290.54	$685,240.03
4/1/2023	76	$5,155.31	$1,855.86	$3,299.45	$681,940.58
5/1/2023	77	$5,155.31	$1,846.92	$3,308.39	$678,632.19
6/1/2023	78	$5,155.31	$1,837.96	$3,317.35	$675,314.84
7/1/2023	79	$5,155.31	$1,828.98	$3,326.33	$671,988.51
8/1/2023	80	$5,155.31	$1,819.97	$3,335.34	$668,653.17
9/1/2023	81	$5,155.31	$1,810.94	$3,344.37	$665,308.79
10/1/2023	82	$5,155.31	$1,801.88	$3,353.43	$661,955.36
11/1/2023	83	$5,155.31	$1,792.80	$3,362.51	$658,592.85
12/1/2023	84	$5,155.31	$1,783.69	$3,371.62	$655,221.23
1/1/2024	85	$5,155.31	$1,774.56	$3,380.75	$651,840.47
2/1/2024	86	$5,155.31	$1,765.40	$3,389.91	$648,450.56
3/1/2024	87	$5,155.31	$1,756.22	$3,399.09	$645,051.47
4/1/2024	88	$5,155.31	$1,747.01	$3,408.30	$641,643.18
5/1/2024	89	$5,155.31	$1,737.78	$3,417.53	$638,225.65
6/1/2024	90	$5,155.31	$1,728.53	$3,426.78	$634,798.87
7/1/2024	91	$5,155.31	$1,719.25	$3,436.06	$631,362.81
8/1/2024	92	$5,155.31	$1,709.94	$3,445.37	$627,917.44
9/1/2024	93	$5,155.31	$1,700.61	$3,454.70	$624,462.74
10/1/2024	94	$5,155.31	$1,691.25	$3,464.06	$620,998.68
11/1/2024	95	$5,155.31	$1,681.87	$3,473.44	$617,525.24
12/1/2024	96	$5,155.31	$1,672.46	$3,482.85	$614,042.39
1/1/2025	97	$5,155.31	$1,663.03	$3,492.28	$610,550.11

Date	Month	Payment	Interest	Principal	Balance
2/1/2025	98	$5,155.31	$1,653.57	$3,501.74	$607,048.38
3/1/2025	99	$5,155.31	$1,644.09	$3,511.22	$603,537.16
4/1/2025	100	$5,155.31	$1,634.58	$3,520.73	$600,016.43
5/1/2025	101	$5,155.31	$1,625.04	$3,530.27	$596,486.16
6/1/2025	102	$5,155.31	$1,615.48	$3,539.83	$592,946.33
7/1/2025	103	$5,155.31	$1,605.90	$3,549.41	$589,396.92
8/1/2025	104	$5,155.31	$1,596.28	$3,559.03	$585,837.89
9/1/2025	105	$5,155.31	$1,586.64	$3,568.67	$582,269.23
10/1/2025	106	$5,155.31	$1,576.98	$3,578.33	$578,690.90
11/1/2025	107	$5,155.31	$1,567.29	$3,588.02	$575,102.87
12/1/2025	108	$5,155.31	$1,557.57	$3,597.74	$571,505.13
1/1/2026	109	$5,155.31	$1,547.83	$3,607.48	$567,897.65
2/1/2026	110	$5,155.31	$1,538.06	$3,617.25	$564,280.39
3/1/2026	111	$5,155.31	$1,528.26	$3,627.05	$560,653.34
4/1/2026	112	$5,155.31	$1,518.44	$3,636.87	$557,016.47
5/1/2026	113	$5,155.31	$1,508.59	$3,646.72	$553,369.75
6/1/2026	114	$5,155.31	$1,498.71	$3,656.60	$549,713.14
7/1/2026	115	$5,155.31	$1,488.81	$3,666.50	$546,046.64
8/1/2026	116	$5,155.31	$1,478.88	$3,676.43	$542,370.21
9/1/2026	117	$5,155.31	$1,468.92	$3,686.39	$538,683.82
10/1/2026	118	$5,155.31	$1,458.94	$3,696.38	$534,987.44
11/1/2026	119	$5,155.31	$1,448.92	$3,706.39	$531,281.05
12/1/2026	120	$5,155.31	$1,438.89	$3,716.42	$527,564.63
1/1/2027	121	$5,155.31	$1,428.82	$3,726.49	$523,838.14
2/1/2027	122	$5,155.31	$1,418.73	$3,736.58	$520,101.56
3/1/2027	123	$5,155.31	$1,408.61	$3,746.70	$516,354.86
4/1/2027	124	$5,155.31	$1,398.46	$3,756.85	$512,598.01
5/1/2027	125	$5,155.31	$1,388.29	$3,767.02	$508,830.98
6/1/2027	126	$5,155.31	$1,378.08	$3,777.23	$505,053.76
7/1/2027	127	$5,155.31	$1,367.85	$3,787.46	$501,266.30
8/1/2027	128	$5,155.31	$1,357.60	$3,797.71	$497,468.59
9/1/2027	129	$5,155.31	$1,347.31	$3,808.00	$493,660.59
10/1/2027	130	$5,155.31	$1,337.00	$3,818.31	$489,842.27
11/1/2027	131	$5,155.31	$1,326.66	$3,828.65	$486,013.62
12/1/2027	132	$5,155.31	$1,316.29	$3,839.02	$482,174.60
1/1/2028	133	$5,155.31	$1,305.89	$3,849.42	$478,325.18
2/1/2028	134	$5,155.31	$1,295.46	$3,859.85	$474,465.33
3/1/2028	135	$5,155.31	$1,285.01	$3,870.30	$470,595.03
4/1/2028	136	$5,155.31	$1,274.53	$3,880.78	$466,714.25
5/1/2028	137	$5,155.31	$1,264.02	$3,891.29	$462,822.95

Date	Month	Payment	Interest	Principal	Balance
6/1/2028	138	$5,155.31	$1,253.48	$3,901.83	$458,921.12
7/1/2028	139	$5,155.31	$1,242.91	$3,912.40	$455,008.72
8/1/2028	140	$5,155.31	$1,232.32	$3,923.00	$451,085.73
9/1/2028	141	$5,155.31	$1,221.69	$3,933.62	$447,152.11
10/1/2028	142	$5,155.31	$1,211.04	$3,944.27	$443,207.84
11/1/2028	143	$5,155.31	$1,200.35	$3,954.96	$439,252.88
12/1/2028	144	$5,155.31	$1,189.64	$3,965.67	$435,287.21
1/1/2029	145	$5,155.31	$1,178.90	$3,976.41	$431,310.81
2/1/2029	146	$5,155.31	$1,168.13	$3,987.18	$427,323.63
3/1/2029	147	$5,155.31	$1,157.33	$3,997.98	$423,325.65
4/1/2029	148	$5,155.31	$1,146.51	$4,008.80	$419,316.85
5/1/2029	149	$5,155.31	$1,135.65	$4,019.66	$415,297.19
6/1/2029	150	$5,155.31	$1,124.76	$4,030.55	$411,266.64
7/1/2029	151	$5,155.31	$1,113.85	$4,041.46	$407,225.18
8/1/2029	152	$5,155.31	$1,102.90	$4,052.41	$403,172.77
9/1/2029	153	$5,155.31	$1,091.93	$4,063.38	$399,109.39
10/1/2029	154	$5,155.31	$1,080.92	$4,074.39	$395,035.00
11/1/2029	155	$5,155.31	$1,069.89	$4,085.42	$390,949.57
12/1/2029	156	$5,155.31	$1,058.82	$4,096.49	$386,853.08
1/1/2030	157	$5,155.31	$1,047.73	$4,107.58	$382,745.50
2/1/2030	158	$5,155.31	$1,036.60	$4,118.71	$378,626.79
3/1/2030	159	$5,155.31	$1,025.45	$4,129.86	$374,496.93
4/1/2030	160	$5,155.31	$1,014.26	$4,141.05	$370,355.88
5/1/2030	161	$5,155.31	$1,003.05	$4,152.26	$366,203.62
6/1/2030	162	$5,155.31	$991.80	$4,163.51	$362,040.11
7/1/2030	163	$5,155.31	$980.53	$4,174.79	$357,865.33
8/1/2030	164	$5,155.31	$969.22	$4,186.09	$353,679.23
9/1/2030	165	$5,155.31	$957.88	$4,197.43	$349,481.80
10/1/2030	166	$5,155.31	$946.51	$4,208.80	$345,273.01
11/1/2030	167	$5,155.31	$935.11	$4,220.20	$341,052.81
12/1/2030	168	$5,155.31	$923.68	$4,231.63	$336,821.19
1/1/2031	169	$5,155.31	$912.22	$4,243.09	$332,578.10
2/1/2031	170	$5,155.31	$900.73	$4,254.58	$328,323.52
3/1/2031	171	$5,155.31	$889.21	$4,266.10	$324,057.42
4/1/2031	172	$5,155.31	$877.66	$4,277.65	$319,779.77
5/1/2031	173	$5,155.31	$866.07	$4,289.24	$315,490.53
6/1/2031	174	$5,155.31	$854.45	$4,300.86	$311,189.67
7/1/2031	175	$5,155.31	$842.81	$4,312.50	$306,877.16
8/1/2031	176	$5,155.31	$831.13	$4,324.18	$302,552.98
9/1/2031	177	$5,155.31	$819.41	$4,335.90	$298,217.08

Date	Month	Payment	Interest	Principal	Balance
10/1/2031	178	$5,155.31	$807.67	$4,347.64	$293,869.44
11/1/2031	179	$5,155.31	$795.90	$4,359.41	$289,510.03
12/1/2031	180	$5,155.31	$784.09	$4,371.22	$285,138.81
1/1/2032	181	$5,155.31	$772.25	$4,383.06	$280,755.75
2/1/2032	182	$5,155.31	$760.38	$4,394.93	$276,360.82
3/1/2032	183	$5,155.31	$748.48	$4,406.83	$271,953.99
4/1/2032	184	$5,155.31	$736.54	$4,418.77	$267,535.22
5/1/2032	185	$5,155.31	$724.57	$4,430.74	$263,104.48
6/1/2032	186	$5,155.31	$712.57	$4,442.74	$258,661.75
7/1/2032	187	$5,155.31	$700.54	$4,454.77	$254,206.98
8/1/2032	188	$5,155.31	$688.48	$4,466.83	$249,740.15
9/1/2032	189	$5,155.31	$676.38	$4,478.93	$245,261.22
10/1/2032	190	$5,155.31	$664.25	$4,491.06	$240,770.15
11/1/2032	191	$5,155.31	$652.09	$4,503.22	$236,266.93
12/1/2032	192	$5,155.31	$639.89	$4,515.42	$231,751.51
1/1/2033	193	$5,155.31	$627.66	$4,527.65	$227,223.86
2/1/2033	194	$5,155.31	$615.40	$4,539.91	$222,683.95
3/1/2033	195	$5,155.31	$603.10	$4,552.21	$218,131.74
4/1/2033	196	$5,155.31	$590.77	$4,564.54	$213,567.20
5/1/2033	197	$5,155.31	$578.41	$4,576.90	$208,990.30
6/1/2033	198	$5,155.31	$566.02	$4,589.29	$204,401.01
7/1/2033	199	$5,155.31	$553.59	$4,601.72	$199,799.28
8/1/2033	200	$5,155.31	$541.12	$4,614.19	$195,185.10
9/1/2033	201	$5,155.31	$528.63	$4,626.68	$190,558.41
10/1/2033	202	$5,155.31	$516.10	$4,639.21	$185,919.20
11/1/2033	203	$5,155.31	$503.53	$4,651.78	$181,267.42
12/1/2033	204	$5,155.31	$490.93	$4,664.38	$176,603.04
1/1/2034	205	$5,155.31	$478.30	$4,677.01	$171,926.03
2/1/2034	206	$5,155.31	$465.63	$4,689.68	$167,236.35
3/1/2034	207	$5,155.31	$452.93	$4,702.38	$162,533.97
4/1/2034	208	$5,155.31	$440.20	$4,715.11	$157,818.86
5/1/2034	209	$5,155.31	$427.43	$4,727.88	$153,090.98
6/1/2034	210	$5,155.31	$414.62	$4,740.69	$148,350.29
7/1/2034	211	$5,155.31	$401.78	$4,753.53	$143,596.76
8/1/2034	212	$5,155.31	$388.91	$4,766.40	$138,830.36
9/1/2034	213	$5,155.31	$376.00	$4,779.31	$134,051.04
10/1/2034	214	$5,155.31	$363.05	$4,792.26	$129,258.79
11/1/2034	215	$5,155.31	$350.08	$4,805.23	$124,453.55
12/1/2034	216	$5,155.31	$337.06	$4,818.25	$119,635.31
1/1/2035	217	$5,155.31	$324.01	$4,831.30	$114,804.01

Date	Month	Payment	Interest	Principal	Balance
2/1/2035	218	$5,155.31	$310.93	$4,844.38	$109,959.63
3/1/2035	219	$5,155.31	$297.81	$4,857.50	$105,102.12
4/1/2035	220	$5,155.31	$284.65	$4,870.66	$100,231.46
5/1/2035	221	$5,155.31	$271.46	$4,883.85	$95,347.61
6/1/2035	222	$5,155.31	$258.23	$4,897.08	$90,450.54
7/1/2035	223	$5,155.31	$244.97	$4,910.34	$85,540.20
8/1/2035	224	$5,155.31	$231.67	$4,923.64	$80,616.56
9/1/2035	225	$5,155.31	$218.34	$4,936.97	$75,679.58
10/1/2035	226	$5,155.31	$204.97	$4,950.34	$70,729.24
11/1/2035	227	$5,155.31	$191.56	$4,963.75	$65,765.49
12/1/2035	228	$5,155.31	$178.11	$4,977.20	$60,788.29
1/1/2036	229	$5,155.31	$164.63	$4,990.68	$55,797.62
2/1/2036	230	$5,155.31	$151.12	$5,004.19	$50,793.42
3/1/2036	231	$5,155.31	$137.57	$5,017.74	$45,775.68
4/1/2036	232	$5,155.31	$123.98	$5,031.33	$40,744.34
5/1/2036	233	$5,155.31	$110.35	$5,044.96	$35,699.38
6/1/2036	234	$5,155.31	$96.69	$5,058.62	$30,640.76
7/1/2036	235	$5,155.31	$82.99	$5,072.32	$25,568.43
8/1/2036	236	$5,155.31	$69.25	$5,086.06	$20,482.37
9/1/2036	237	$5,155.31	$55.47	$5,099.84	$15,382.53
10/1/2036	238	$5,155.31	$41.66	$5,113.65	$10,268.88
11/1/2036	239	$5,155.31	$27.81	$5,127.50	$5,141.39
12/1/2036	240	$5,155.31	$13.92	$5,141.39	$0.00

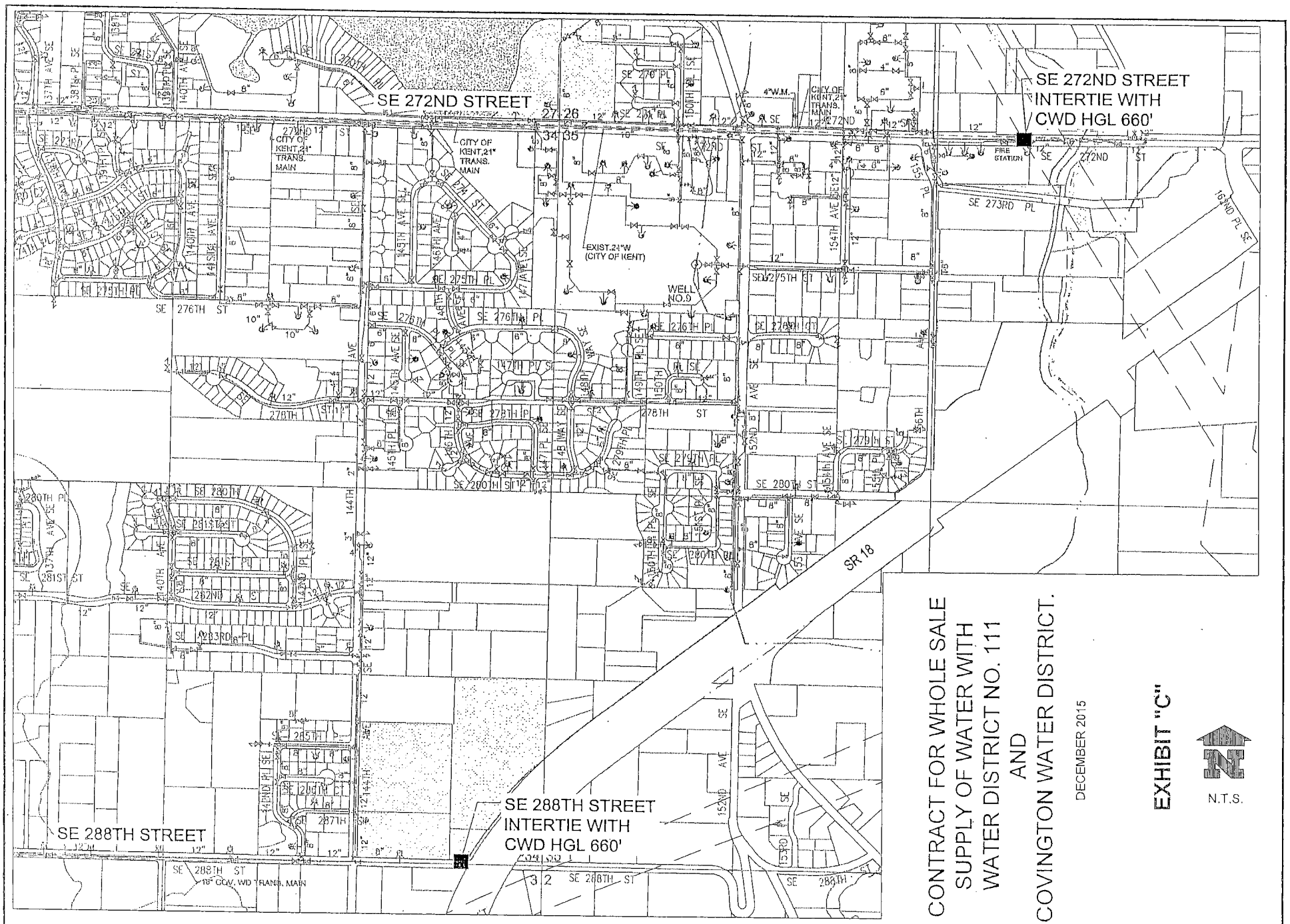

CONTRACT FOR WHOLE SALE SUPPLY OF WATER WITH WATER DISTRICT NO. 111 AND COVINGTON WATER DISTRICT.

DECEMBER 2015

EXHIBIT "C"

N.T.S.

PLOTTING DATE: 12/21/2015 11:54 AM USER: Mirochnik, Izabella FILE NAME: V:\2002\resource\SPATIAL\KCGIS\WD111\DWGS\MAPS\ex.#2.dwg

EXHIBIT D

FORM DISTRICT BILL OF SALE TO COVINGTON

BILL OF SALE

King County Water District No. 111, a Washington municipal corporation ("District"), hereby conveys and transfers to Covington Water District, a Washington municipal corporation ("Covington"), the following described property and as depicted on Attachment A attached hereto and incorporated herein in full by this reference [this attachment to be prepared and executed by the District at the time the Improvements are installed by the District and conveyed by bill of sale to Covington]:

> The flow control station and flow meter on SE 288th Street located near the west right-of-way line of State Highway 18 ("SR 18"), and all appurtenances related thereto (referred to herein as the "SE 288th Street Intertie Improvements" or "Improvements").

This conveyance is made in consideration of the mutual covenants and promises contained in the Contract for Wholesale Supply of Water dated December ____, 2015 ("Contract"), between the District and Covington, which Contract is incorporated herein by this reference.

The District covenants and warrants that it is the owner of such SE 288th Street Intertie Improvements and that it has good right, title, and authority to transfer and convey the same and that it will, and does, hereby warrant and agree to defend the transfer and conveyance of the SE 288th Street Intertie Improvements to Covington, its successors and assigns, against any and all persons or entities that may assert a claim of ownership in such Improvements. The District further warrants and guarantees that the SE 288th Street Intertie Improvements are fit for their intended purposes, that being for the control and distribution of water between Covington's Water Supply System and the District's Water Supply System, and that the SE 288th Street Intertie Improvements have been constructed in accordance with the conditions and standards of the District.

The District covenants and agrees with Covington to replace, repair and correct any defect in work or materials in respect to the SE 288th Street Intertie Improvements arising during a period of two (2) years from date hereof, without cost to Covington. The District further covenants and agrees to transfer to Covington any warranties provided by the District's contractor who/which installed the Improvements, and by suppliers or manufacturers of materials or equipment used in the construction of the Improvements.

KING COUNTY WATER DISTRICT NO. 111

By_____

Name_____

Its_____

Date_____

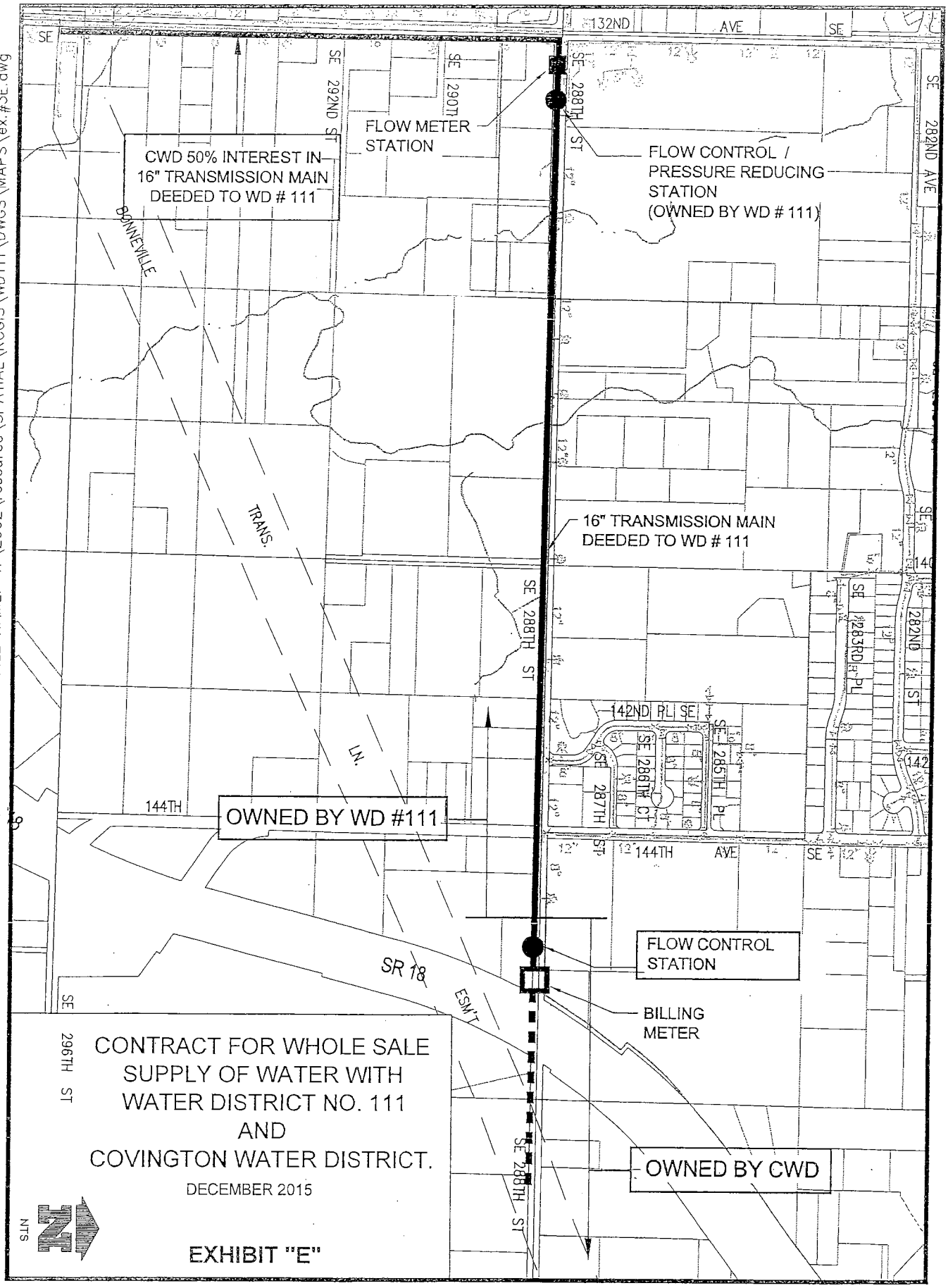

CONTRACT FOR WHOLE SALE SUPPLY OF WATER WITH WATER DISTRICT NO. 111 AND COVINGTON WATER DISTRICT.

DECEMBER 2015

EXHIBIT "E"

PLOTTING DATE: 12/21/2015 3:17 PM USER: Mirochnik, Izabella FILE NAME: V:\2002\resource\SPATIAL\KCGIS\WD111\DWGS\MAPS\ex.#3E.dwg

EXHIBIT F

FORM COVINGTON BILL OF SALE TO DISTRICT FOR TRANSMISSION MAINS

BILL OF SALE

Covington Water District, a Washington municipal corporation ("Covington"), hereby conveys and transfers to King County Water District No. 111, a Washington municipal corporation ("District"), the following described property and as depicted on Attachment A attached hereto and incorporated herein in full by this reference:

SIZE	ON	FROM	TO	LENGTH
16"	SE 288th St. and SR 18	Connection to 12" x 8" Tee 90 feet +/- East of the intersection of 132nd Ave SE and SE 288th St.	Connection to the existing 12" water main South of the intersection of SE 288th St. and the West right of way line of SR 18	4,693 LF
16"	SE 288th St. and 132nd Ave SE	Connection to existing 16" water main at the intersection of 132nd Ave SE and SE 288th St.	RWSS Intertie at the intersection of the 132nd Ave SE and Bonneville Trans. Line	2,460 LF
12"	SE 288th St.	Connection to the existing 12" Tee 40 feet +/- East of the intersection of 132nd Ave SE and SE 288th St.	Connection to 12" x 8" Tee 90 feet +/- East of the intersection of 132nd Ave SE and SE 288th St.	46 LF
8"	SE 288th St.	Tee connection to 16" water main West of SR 18	BO ASSY West of SR 18 at the SE corner of parcel #98	21 LF
			Total 16" 12" 8"	7,153 LF 46 LF 21 LF

This conveyance is made in consideration of the mutual covenants and promises contained in the Contract for Wholesale Supply of Water dated December ____, 2015 ("Contract") between the District and Covington, which Contract is incorporated herein by this reference. Except as otherwise specifically provided in the Contract, the transfer of property by this Bill of Sale shall be without any warranties, express or implied, and the District agrees to accept the property in its current "As-Is, Where-Is" condition. Reference should be made to the Contract for certain limited warranties provided by Covington to the District.

COVINGTON WATER DISTRICT

By_____

Name_____

Its_____

Date_____

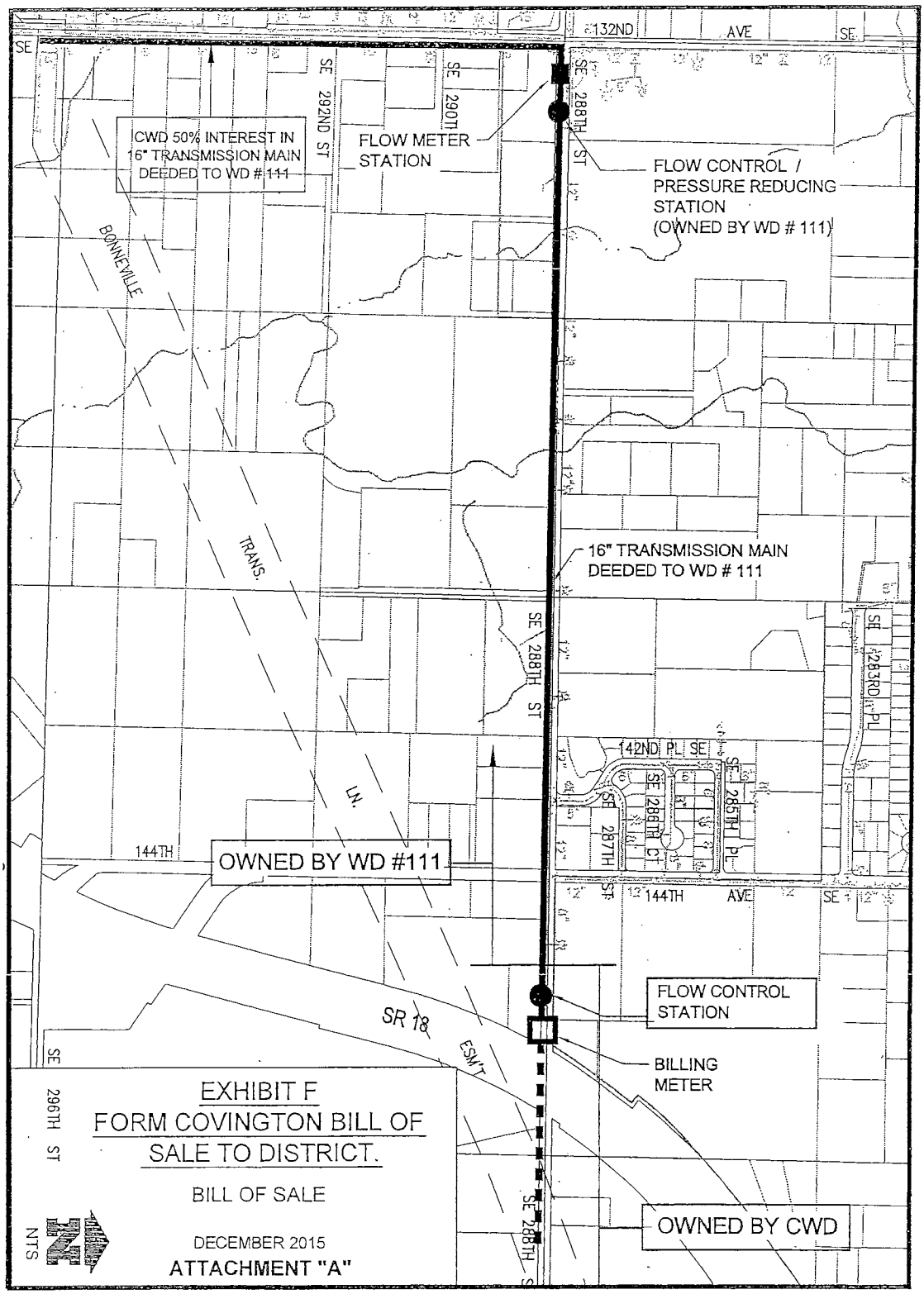

EXHIBIT F
FORM COVINGTON BILL OF SALE TO DISTRICT.

BILL OF SALE

DECEMBER 2015

ATTACHMENT "A"

EXHIBIT G

FORM COVINGTON BILL OF SALE TO DISTRICT FOR JOINT FLOW CONTROL AND METER STATION

BILL OF SALE

Covington Water District, a Washington municipal corporation ("Covington"), hereby conveys, transfers and quit claims to King County Water District No. 111, a Washington municipal corporation ("District"), the following described property and as depicted on Attachment A attached hereto and incorporated herein in full by this reference:

> The existing concrete meter vault, interior 8 inch ductile iron piping, interior flow meter, telemetry equipment, electrical equipment and approximately 21'-8" of 8 inch ductile iron waterline, along with valves, fittings and all appurtenances.

This conveyance is made in consideration of the mutual covenants and promises contained in the Contract for Wholesale Supply of Water dated December ____, 2015 ("Contract") between the District and Covington, which Contract is incorporated herein by this reference. The transfer of property by this Bill of Sale shall be without any warranties, express or implied, and the District agrees to accept the property in its current "As-Is, Where-Is" condition.

COVINGTON WATER DISTRICT

By_____

Name_____

Its_____

Date_____

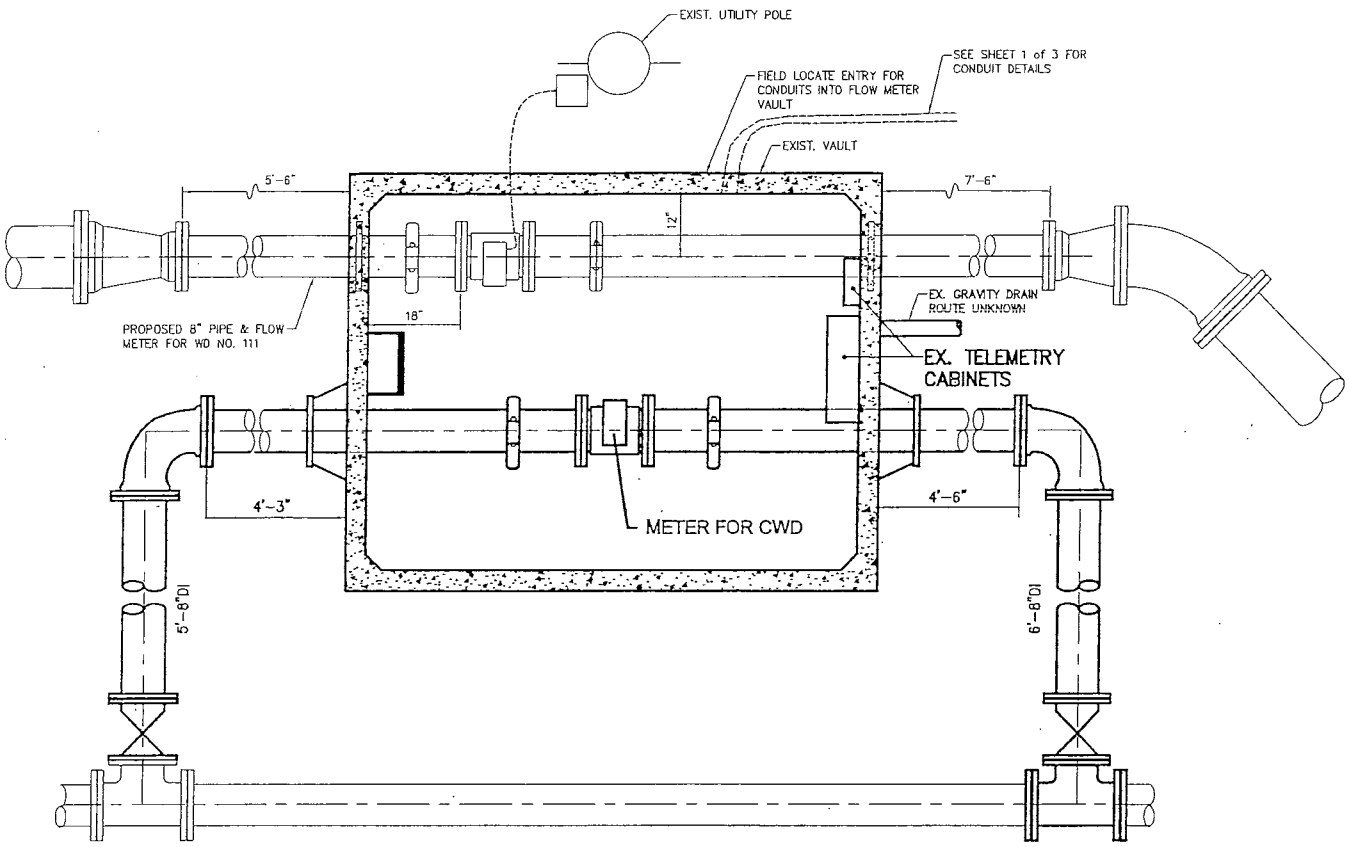

PLAN VIEW
EXISTING VAULT

FLOW METER STATION

NTS

EXHIBIT G
FORM COVINGTON BILL OF SALE

DECEMBER 2015

ATTACHMENT "A"

PLOTTING DATE: 12/22/2015 1:20 PM USER: Mirochnik, Izabella FILE NAME: V:\2002\resource\SPATIAL\KCGIS\WD111\DWGS\MAPS\ex.G-4.dwg

COVINGTON WATER DISTRICT
KING COUNTY, WASHINGTON
RESOLUTION NO. 4149

RESOLUTION OF THE BOARD OF COMMISSIONERS OF COVINGTON WATER DISTRICT, KING COUNTY, WASHINGTON, APPROVING A CONTRACT FOR WHOLESALE SUPPLY OF WATER WITH KING COUNTY WATER DISTRICT NO. 111.

WHEREAS, pursuant to Title 57 RCW, Covington Water District ("District") is authorized to supply potable water to customers within and without its boundaries through a public water system; and

WHEREAS, also pursuant to Title 57 RCW, King County Water District No. 111 ("WD 111") is authorized to supply potable water to customers located within and without its boundaries through a public water system, and

WHEREAS, the District's water service area boundary is adjacent to WD 111's water service area boundary; and, the District and WD 111 (the "Parties") currently maintain an intertie connection between their respective water systems for the provision of emergency water supply between the Parties ("Emergency Intertie"); and

WHEREAS, WD 111 is in need of long-term, non-interruptible additional water supply to meet the present and expected demand for water service within its water service area; and

WHEREAS, the District has sufficient water supply to provide WD 111 with long-term, non-interruptible additional water supply to assist WD 111 in meeting its present and expected demand for water service within its water service area, and is willing to provide WD 111 with wholesale water supply on certain terms and conditions, including WD 111's agreement to install a new intertie facility in connection with the District's agreement to provide wholesale water supply to WD 111 ("Wholesale Water Intertie"), as set forth in the "Contract for Wholesale Supply of Water" in the draft form attached hereto as **Exhibit A** and incorporated herein in full by this reference ("Wholesale Water Supply Contract" or "Contract"), and WD 111 desires to purchase wholesale water supply from the District on such terms and conditions; and

WHEREAS, the Parties have the legal authority to cooperate with other municipalities on the basis of mutual advantage and efficient provision of municipal services pursuant to Chapter 39.34 RCW, the Interlocal Cooperation Act, to install intertie connections between their public water systems pursuant to RCW 90.03.383 to ensure reliable public water supplies, and to provide for wholesale water supply pursuant to RCW 57.08.005(3) on such terms and conditions as may mutually be agreed upon by the Parties; and

COPY

WHEREAS, the District's General Manager has recommended that the District Board of Commissioners authorize him to conclude the negotiations of the Wholesale Water Supply Contract with WD 111 on terms and conditions substantially in the form of the draft Contract attached hereto, to execute the final version of such Contract on behalf of the District, and to then implement the Wholesale Water Supply Contract; now, therefore,

BE IT RESOLVED, by the Board of Commissioners of Covington Water District, King County, Washington, as follows:

1. The Board hereby approves of the Wholesale Water Supply Contract attached hereto as **Exhibit A** in its current or substantially similar form, subject to final negotiations of the remaining terms and conditions.

2. The District General Manager is hereby authorized and directed to (a) conclude the negotiations of the Contract with WD 111 on such terms and conditions consistent with the draft Contract attached hereto, (b) execute the Wholesale Water Supply Contract on behalf of the District when the Contract is in a form acceptable to him, and (c) after such Contract is fully executed by the Parties, to implement and perform the terms and conditions set forth in the Contract.

ADOPTED by the Board of Commissioners of Covington Water District at a special open public meeting thereof held on the 28th day of December, 2015.

Covington Water District
Board of Commissioners

Jeff Clark, President

Vern Allemand, Secretary

Alan Eades

David B. Roselle

Tal Weberg

COPY

KING COUNTY WATER DISTRICT NO. 111
KING COUNTY, WASHINGTON

RESOLUTION NO. 596-12-15

RESOLUTION OF THE BOARD OF COMMISSIONERS OF KING COUNTY WATER DISTRICT NO. 111, KING COUNTY, WASHINGTON, APPROVING A CONTRACT FOR WHOLESALE SUPPLY OF WATER WITH COVINGTON WATER DISTRICT.

WHEREAS, pursuant to Title 57 RCW, King County Water District No. 111 ("District") is authorized to supply potable water to customers within and without its boundaries through a public water system; and

WHEREAS, also pursuant to Title 57 RCW, Covington Water District ("Covington") is authorized to supply potable water to customers located within and without its boundaries through a public water system, and

WHEREAS, Covington's water service area boundary is adjacent to the District's water service area boundary; and, the District and Covington (the "Parties") currently maintain an intertie connection between their respective water systems for the provision of emergency water supply between the Parties ("Emergency Intertie"); and

WHEREAS, the District is in need of long-term, non-interruptible additional water supply to meet the present and expected demand for water service within its water service area; and

WHEREAS, Covington has sufficient water supply to provide the District with long-term, non-interruptible additional water supply to assist the District in meeting its present and expected demand for water service within its water service area, and is willing to provide the District with wholesale water supply on certain terms and conditions, including the installation of a new intertie to provide wholesale water supply to the District ("Wholesale Water Intertie"), as set forth in the "Contract for Wholesale Supply of Water" in the draft form attached hereto as **Exhibit A** and incorporated herein in full by this reference ("Wholesale Water Supply Contract" or "Contract"), and the District desires to purchase wholesale water supply from Covington on such terms and conditions; and

WHEREAS, the Parties have the legal authority to cooperate with other municipalities on the basis of mutual advantage and efficient provision of municipal services pursuant to Chapter 39.34 RCW, the Interlocal Cooperation Act, to install intertie connections between their public water systems pursuant to RCW 90.03.383 to ensure reliable public water supplies, and to provide for wholesale water supply pursuant to RCW 57.08.005 (3) on such terms and conditions as may mutually be agreed upon by the Parties; and

WHEREAS, the District General Manager has recommended the District Board authorize him to conclude the negotiations of the Wholesale Water Supply Contract with Covington on terms and conditions substantially in the form of the draft Contract attached hereto, to execute the final version of such Contract on behalf of the District, and to then implement the Wholesale Water Supply Contract; now, therefore,

BE IT RESOLVED, by the Board of Commissioners of King County Water District No. 111, King County, Washington, as follows:

1. The Wholesale Water Supply Contract in the form substantially attached hereto as **Exhibit A** is hereby approved.

2. The District General Manager is hereby authorized and directed to (a) conclude the negotiations of the Contract with Covington on such terms and conditions consistent with the draft Contract attached hereto, (b) execute the Wholesale Water Supply Contract on behalf of the District when the Contract is in a form acceptable to him, and (c) after such contract is approved and executed by Covington, to implement and perform the terms and conditions set forth in the Contract.

ADOPTED by the Board of Commissioners of King County Water District No. 111 at a special open public meeting thereof held on the 23rd day of December, 2015.

BOARD OF COMMISSIONERS
KING COUNTY WATER DISTRICT NO. 111

By:_____
Gary G. Cline, President

By:_____
Patrick M. Hanis, Secretary

By:_____
Charles E. Wilson, Commissioner

JURISDICTION DIVIDER

Soos Creek Water & Sewer District
(formerly King County Water District No. 58)

KING COUNTY WATER DISTRICT NO. 58

KING COUNTY, WASHINGTON

RESOLUTION NO. 1743

A RESOLUTION of the Board of Commissioners of King County Water District No. 58, King County, Washington, approving and accepting an agreement between King County Water District No. 58 and King County Water District No. 111.

WHEREAS, Water District No. 58 and Water District No. 111 have previously informally agreed to the establishment of a boundary between the service areas of the two parties; and

WHEREAS, Water District No. 111 has requested that Water District No. 58 and Water District No. 111 enter into a written agreement setting forth their informal agreement.

NOW, THEREFORE, BE IT RESOLVED by the Board of Commissioners of King County Water District No. 58, as follows:

SECTION 1: That the Agreement Establishing Use and Service Areas of the Parties entered into by and between King County Water District No. 58 and King County Water District No. 111 is hereby approved and accepted by King County Water District No. 58. A copy of said Agreement is attached hereto as Exhibit "A", and by this reference is made a part hereof.

ADOPTED by the Board of Commissioners of King County Water District No. 58, King County, Washington, at a regular open public meeting thereof on the 14th day of November, 1978.

BEN BERGSMA, President

PATRICK J. BRAZEL, Secretary

SAM PAFFILE

RESOLUTION NO. 1743

SUBJECT: Approving and accepting agreement between King County Water District No. 58 and King County Water District No. 111

AGREEMENT ESTABLISHING USE AND
SERVICE AREAS OF THE PARTIES

THIS AGREEMENT made and entered into by and between King County Water District No. 111, a special purpose district of the State of Washington, hereinafter called "District, and King County Water District No. 58, a special purpose district of the State of Washington, hereinafer called "Second Party".

1. PURPOSE: The District and Second Party have previously informally agreed to the establishment of a boundary between the service areas of the two parties and are now desirous of confirming the previous understanding and agreement in writing.

2. AGREEMENT: The parties having reviewed their comprehensive plans, considered the needs of the people within each area and the logical and most efficient service areas do hereby agree that the boundary between the areas to be served by each of the parties shall be as follows:

> Beginning at the northwest corner of Section 21, township 22 North, Range 5 East, W.M.; thence east along the north line of sections 21, 22 and 23, to the northeast corner of section 23, township 22 north Range 5 East, W.M.; (center line of S.E. 240th Street).

District shall serve the area lying generally south of said boundary line and Second Party shall serve the area lying generally north of said boundary line.

DATED this 22nd day of November, 1978.

KING COUNTY WATER DISTRICT NO. 111	KING COUNTY WATER DISTRICT NO. 58
By Gary G. Cline, Commissioner	By Ben Bergsma, Commissioner
By Robert R. Sparks, Commissioner	By Patrick J. Brazil, Commissioner
By Charles E. Wilson, Commissioner	By Sam Paffile, Commissioner

Filed at the Request of:

Gerald M. Ormiston
5th Ave., #4100
tle, WA 98104

EMERGENCY SYSTEM INTERTIE AGREEMENT
PHASE 1

This agreement between Soos Creek Water & Sewer District, hereinafter referred to as SCWSD, and Water District No. 111 of King County, hereinafter referred to as WD 111, is entered into for the purposes of planning, designing, constructing, maintaining and operating an emergency system intertie between the respective parties.

The terms of the agreement are as follows:

1. The intertie is intended to operate initially as a one way gravity flow from SCWSD's system into WD 111's system. The initial facility and its operation will be defined as Phase 1 of this project. The facilities for this operation are schematically shown on Exhibit No. 1 of this document. Final location and configuration of the facilities shall be determined at the time of final design.

2. WD 111 will act as the lead agency on Phase 1 of this project.

3. WD 111 will acquire the site, design facilities, and contract for the construction of all of the facilities. WD 111 will own the piping on WD 111's side of the vault.

4. Upon completion of construction, WD 111 will deed the intertie vault and all interior equipment and interior appurtenances, and all piping which is located on the SCWSD side of the vault, to SCWSD.

5. SCWSD and WD 111 will each have unlimited access to the vault via a dual padlock or ownership of keys to the vault.

6. SCWSD will own, maintain and operate a normally locked gate or butterfly valve inside of the vault. WD 111 will be provided with a key to this valve's lock. SCWSD will solely unlock and operate the locked valve unless SCWSD personnel are unable to respond to WD 111's request to activate the intertie.

7. The intertie shall be operated only in the event of an emergency. For purposes of this agreement, an emergency shall be defined as a major water line break in WD 111's system, fire demand on WD 111's system, contamination to WD 111's water supply system, mechanical equipment failure, electrical equipment failure or Puget Power facility failure, which are part of WD 111's water supply system.

8. The procedure for operating the intertie in the event of such emergency shall be as follows:

071148

A. WD 111 shall determine that an emergency of sufficient magnitude has occurred which warrants the need to request that the intertie be activated.

B. The manager of WD 111 or appointed person shall provide a verbal request to the operations manager or appointed person of SCWSD. Upon SCWSD's agreement that an emergency exists which shall allow for the intertie to be opened, the intertie will be activated in one of the following two manners:

1. In the event of an emergency which does not require immediate need for water by WD 111, SCWSD will open the intertie at 9:00 a.m. the following morning. WD 111 personnel shall also be on site for operation of WD 111 facilities. SCWSD and WD 111 personnel shall confirm the standing reading on the flow meter totalizer.

2. In the event of a major water line break, or fire demand on the system which requires immediate use of the intertie, WD 111 will verbally notify SCWSD that the intertie needs to be activated as soon as reasonably possible, but not less than thirty minutes after the time of the request. If SCWSD is unable to respond within thirty minutes of WD 111's initial request, WD 111's personnel shall unlock and activate the intertie valve, and verify the standing reading on the flow meter totalizer.

C. WD 111 shall provide SCWSD with a written confirmation of the request not less than 24 hours after the verbal request, or on the first day of normal business after the verbal request. In the event that WD 111 requests that the intertie be activated prior to 9:00 a.m., WD 111 will provide backup data as necessary to SCWSD in order for SCWSD to request and obtain a waiver of demand metering charges from Seattle Water Department for the particular event, in accordance with the water purveyor contract between SCWSD and the Seattle Water Department. However, in the event that demand metering charges are not waived, WD 111 shall pay the demand metering charges incurred by SCWSD related to the event.

SCWSD shall notify Seattle Water Department in writing within 10 days after the use of the emergency intertie and state the nature of the emergency, date, time and quantity of water used during the intertie.

D. The intertie shall remain activated until WD 111 requests that SCWSD close the intertie, or until SCWSD has determined that the need for activation of the emergency intertie has ceased, but in no event for a period of time longer than eight weeks. SCWSD, at their discretion, shall close the intertie at the time of request or determination that the emergency has ceased, or at 9:00

9507071146

a.m. following such request or determination. WD 111 shall provide a written confirmation requesting that the intertie be closed.

E. SCWSD shall read the meter and shall then calculate and invoice WD 111 for the water used during the request.

F. The invoice shall be calculated as follows:

The flow meter reading taken prior to activating the intertie, shall be subtracted from the meter reading taken when intertie is closed. The total water used during the event, which prompted the opening of the intertie, shall be calculated to the nearest ccf (hundred cubic feet).

SCWSD shall multiply the calculated ccf times the new water wholesale rate SCWSD pays to Seattle in dollars per ccf times 1.2 (ccf x wholesale rate x 1.2), unless the event is subject to demand metering charges from Seattle Water Department, in which event the charge to WD 111 shall be calculated as ccf times the demand metering rate times 1.2 (ccf x demand metering charge rate x 1.2). This shall be complete payment for the water, labor, and administration of activating the intertie.

SCWSD shall then forward an invoice to WD 111, and WD 111 shall pay the invoice in full within thirty days of its issue. In the event of non-payment by WD 111 within sixty days, an additional late charge of 10% of the amount past due shall be added to the required payment by WD 111.

9. WD 111 and SCWSD recognize that at some point in the future the districts may desire to operate the intertie flow from WD 111 to SCWSD, for emergency or other reasons. Such operation would require installation of a pump station and related facilities. In the event that the parties to this agreement desire to initiate such future operations, installation of the facilities to pump water from WD 111 to SCWSD shall be referred to as Phase 2, and all costs related thereto, including the possibility of a latecomer reimbursement for Phase 1 costs, would be negotiated at that time. The facilities which would be required to pump water from WD 111 to SCWSD are schematically shown on Exhibit No. 2 of this document. Final facility design and selected option for Phase 2 operation shall be negotiated at the time SCWSD and WD 111 enter into the agreement for Phase 2.

10. This agreement is contingent upon written approval by the Seattle Water Department. This agreement will expire upon expiration of the current Water Purveyor Contract between SCWSD and the Seattle Water Department, and shall also be subject to any amendments made to such Water Purveyor Contract.

9507071146

This agreement dated this 8th day of June, 1995

WATER DISTRICT NO. 111

Manager

Commissioner

Commissioner

Commissioner

SOOS CREEK WATER & SEWER DISTRICT

Operations Manager

Commissioner

Commissioner

Commissioner

Commissioner

Commissioner

APPROVED BY:

SEATTLE WATER DEPARTMENT

SWD Representative

950707-1

EXHIBIT NO.1

EMERGENCY SYSTEM INTERTIE AGREEMENT
PHASE 1-SCHEMATIC DIAGRAM OF FACILITIES & OPERATION

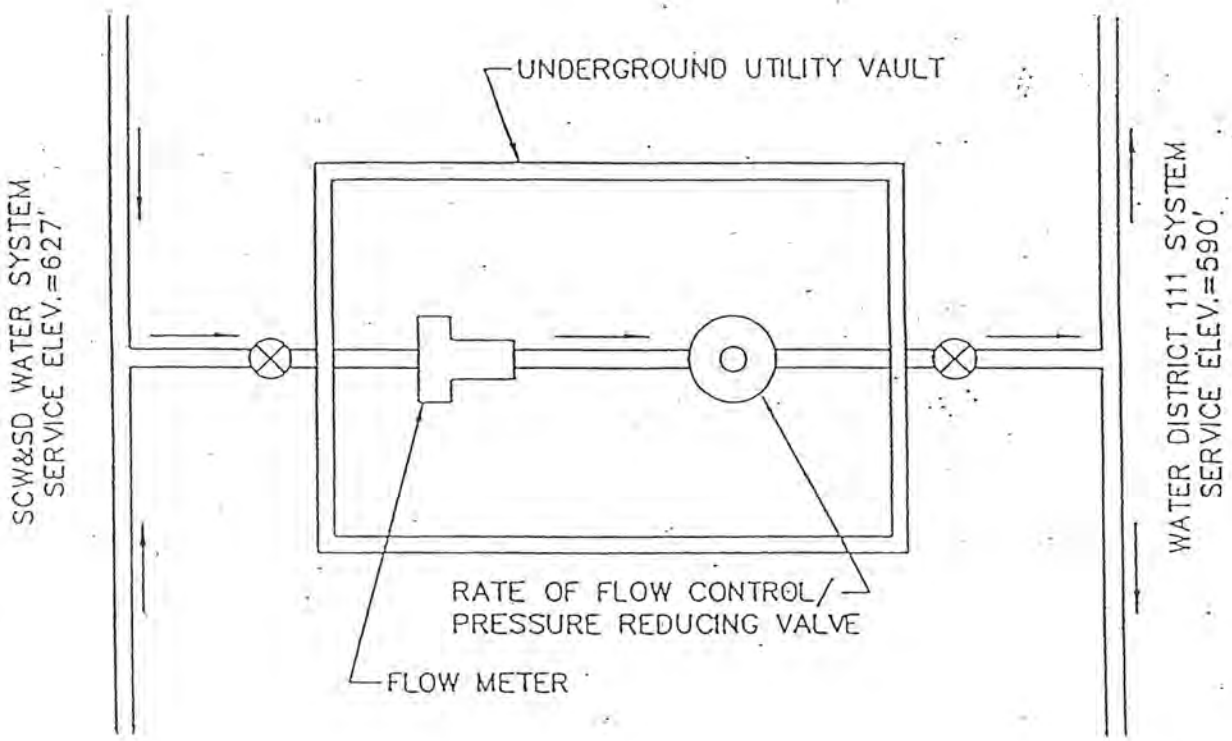

95070/1146

EXHIBIT NO.2

EMERGENCY SYSTEM INTERTIE AGREEMENT
IASE 2-SCHEMATIC DIAGRAM OF FUTURE FACILITIES & OPERATION

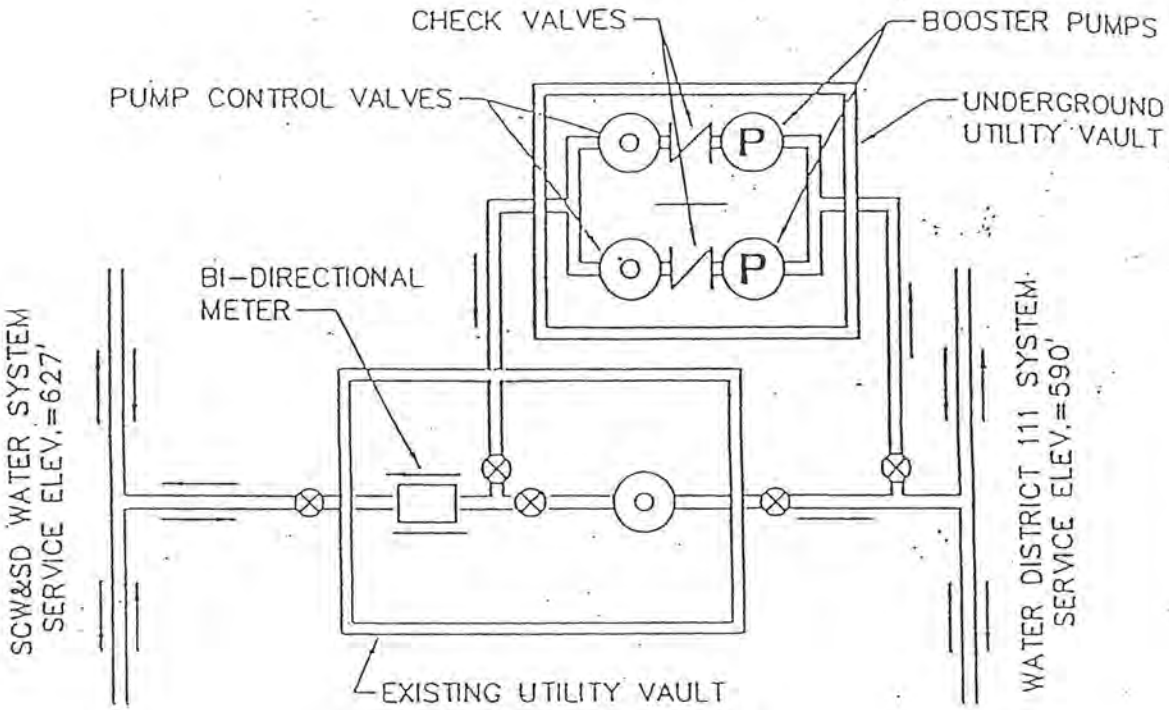

OPTION NO.1

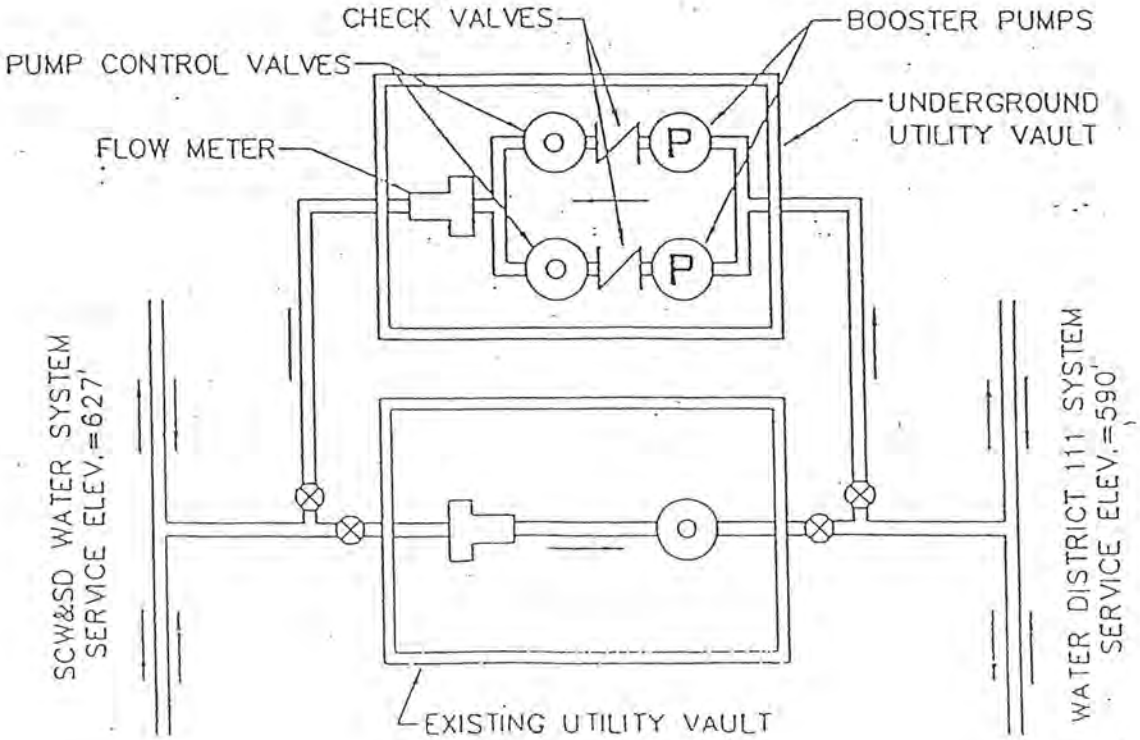

OPTION NO.2

9507071146

JURISDICTION DIVIDER

South King County Regional Water Association

SOUTH KING COUNTY REGIONAL WATER ASSOCIATION
JOINT OPERATING AGREEMENT

Revised October 1996

WHEREAS, an adequate and safe water supply for South King County Regional Water Association (SKCRWA) and its members is vital to both existing citizens and in implementing the long-term comprehensive plans of SKCRWA members; and

WHEREAS, the State and SKCRWA prepared a Coordinated Water System Plan (CWSP) for South King County; and

WHEREAS, projects that provide for the coordinated and cooperative use and operation of supply, transmission, storage, treatment, and pumping facilities to minimize cost, provide for improved water quality, protect the environment, provide for emergency needs, and maximize the best use of the resource is in the best interest of the citizens of the region;

WHEREAS, the current and near-term water needs of the local governments and SKCRWA require steps to establish a cooperative subregional water supply system; and

WHEREAS, the SKCRWA is committed to cooperate toward regional solutions for long range water supply needs.

NOW THEREFORE, the SKCRWA signatory members of this Joint Operating Agreement (JOA), agree as follows:

I. GENERAL

A. The Signatory Members acknowledge the requirement to incorporate land use planning as defined by the Growth Management Act with water supply planning; and

B. The Signatory Members recognize the benefits of developing a subregional water supply system that will allow the optimum use of surface and groundwater to better manage and protect the area's water resources; and

C. The Signatory Members will hold an Annual Meeting about September 30th to review the status of this JOA and any Amendments as well as other problems of mutual concern. The specific date, time, and location of the meeting will be set by mutual agreement.

2. INTENT

A. The general intent is to create a method for the Signatory Members to cooperatively use certain existing facilities and construct new facilities needed to develop a subregional water system The Signatory Members may mutually agree by Interlocal Agreement to produce additional water and distribute it within the Subregional Service Area, with or without change to their retail service area.

B. The JOA provides a framework for joint development of specific projects that may include two or more Participants. Each facility project and/or intertie shall be developed under a separate Interlocal Agreement (IA) consistent with this JOA subject to approval by appropriate affected city council and/or water district boards. The specific intent of this JOA is to make provisions for a standardized form to create or expand cooperative agreements to meet the public water supply needs for both emergency and long-term use, and to establish a basis for agreement between Participants for financing, ownership, construction, and operation of mutually beneficial projects required to achieve cooperative objectives. These projects may include common facilities with other Agencies outside the SKCRWA planning area.

It is further the specific intent of this JOA to preserve Signatory Members' existing water rights and protect the established or planned interest and needs of each Signatory Member with respect to sources of water.

Suggested content for an Interlocal Agreement is shown in Exhibit A. .

C. It is the desire of the Signatory Members that this JOA be incorporated into the South King County CWSP at the next update.

D. The term "Participant" as used in this JOA shall mean all the signatories of an IA consistent with and implemented subsequent to this JOA.

E. The term "Signatory Members" as used in this JOA shall mean all the members of the SKCRWA who have signed this JOA .

3. SUBREGIONAL SERVICE AREA AND FACILITIES

A. "Subregional Service Area " shall mean the Signatory Members' Designated Water Service Areas identified in the CWSP or as approved by amendments to the CWSP or the ParticipantSKCRWA members' Comprehensive Water Plans.

B. "Subregional Facilities" shall mean:

(a) that portion of the Participants' sources, interties, transmission, and storage systems required to supply water to the service area of the Participants or new facilities as defined by a separate IA pursuant to this JOA.

(b) those designated capacities within a Participant system as specifically defined in an appropriate IA.

C. "Facility Ownership". Ownership of the physical facilities that exist on the date of this JOA shall remain with the individual Signatory Members. Unless otherwise agreed to within a specific IA, ownership and operational responsibilities of new facilities shall be based generally on location in designated service areas, with capacity rights defined by appropriate IA.

4. WATER SUPPLY - CAPACITY RIGHTS

A. Capacity Rights - Participants may purchase capacity by IA. Any changes in these capacity rights shall be recognized by an IA, approved by the appropriate affected city councils and/or water district boards.

B. Additional JOA Participants - Other agencies may purchase capacity rights in subregional facilities subject to the provisions of paragraph 4.C. If other agencies become Signatory Members of the SKCRWA and become Participants in future projects undertaken under this JOA and future IAs, past costs associated with development of this JOA will be assessed to the new agency as specified in Exhibit B.

C. Wholesaling Water -

a) A Signatory Member may wholesale water through lease or otherwise, delivered through subregional facilities to areas outside of the Signatory Member's Service Area, so long as the other Signatory Members' capacity rights are not negatively impacted. Signatory Members of the SKCRWA agree that, where feasible and mutually beneficial, they will coordinate planning and development of water resources.

b) Signatory Members further agree that prior to entering into any agreement to deliver long term water supply or construct joint facilities with a non-Signatory Member agency, they will first make a good faith effort to offer such supplies and/or capacities to Signatory Members (provide the right of first refusal). Such offers shall be made on a cost of service basis as established by separate IA. Signatory Members shall have 60 days to respond.

c) Signatory Members agree that when entering into any agreement to deliver long term water supply or construct joint facilities with a non-Signatory Member agency in accordance with this JOA, they will include and collect for remittance to the SKCRWA a fee for reimbursement of the costs for development of the JOA as specified in Attachment B.

d) Regular meetings of the SKCRWA shall be the forum for making Signatory Members aware of discussions regarding water sales and joint projects, however all offers of participation or requests for participation shall be in writing with copies to other Signatory Members.

D. Conservation All Participants will develop and implement a conservation plan that is consistent with State guidelines. Additional or supplemental conservation requirements beyond basic programs may be included in a specific Interlocal Agreement.

E. Curtailment In general, curtailment for delivery of "firm water" shall be on a uniform percentage basis for both wholesale and retail customers and curtailment for delivery of "interruptible water" shall be on a "last in first out" basis as determined by the date of formal agreement. Specific curtailment requirements and provisions shall be included in Interlocal Agreements implemented under this JOA.

F. Quality - An objective of the Signatory Members is to maintain the quality of the water in the subregional facilities at or above the quality required by the State drinking water standards. The purchasing Participant will be responsible for ensuring water quality blending analyses and other water quality issues are resolved to their own satisfaction. The Signatory Members may meet periodically to ensure that water quality and operational issues are addressed, and that needed information is exchanged in a timely fashion. The written results of these meetings will be circulated in a timely manner to all members and participants and reviewed at the annual meeting.

G. Additional Facilities - Projected needs will be identified by the Participants based on the Participant's designated service areas. As five or more years may be needed to bring major new source capacity capabilities on line, five-year and ten-year forecasts are required, and must be updated whenever a Participant becomes aware of any significant change in their forecast demand. These will be discussed jointly as they arise, and reviewed at the annual meeting.

H. Financing - Each Project IA will include pertinent details of financing for that project. Financial participation in existing and additional facilities will be based on each Participant's projected need for each facility, as designated capacity rights.

I. Cost of Service Charge - The Signatory Members and Participants will establish wholesale water sales charges for both emergency and long-term supply that include: (1) capital cost, (2) fixed operating cost, and (3) a variable operating cost based on quantity of water delivered based on actual costs of providing the service.

Fixed and variable operating and maintenance costs payments will be made monthly per meter and use rates. Projected annual rate adjustments and documentation shall be provided at the annual meeting. Any rate increase will be effective beginning January 1, of the following year.

(1) The Rates and Charges for the capital, operation, and maintenance of the system shall be based on the following:

(a) Capital Cost - Those construction related costs incurred for Capacity Rights. Capital Costs for facilities contracted solely for a specific project (described in an IA) are allocated based on designated capacity to be purchased.

Capital costs shall include the debt service for each Participant. Such debt service shall be defined as the actual debt service on debt issued for the Participant's proportionate share of capacity rights, or if no debt is issued for the Participant's costs by the financing Participant, the amortized value at the interest rate of the most recent revenue bond issued by the financing Participant over 20 years. However, should all capital costs be paid in full by any Participant purchasing capacity rights prior to the time of the financing Participant incurring the costs, no interest charges shall be assigned to the Participant purchasing capacity rights.

Capital Costs associated with a supplying Participant's construction of their internal water system facilities may be included in the fixed and variable operating costs as appropriate, using cost of service principles, in the same manner as those costs are included in the supplying Participant's customer rate base.

(b) Fixed Operating Cost - The cost of labor, supervision, supplies, utilities, services, taxes, insurance, and all other costs required to operate and maintain the system other than those items included under Variable Operating Cost. The operating cost will include an allocation for renewal and replacement.

(c) Variable Operating Cost - Those costs directly proportionate to the volume of water produced, including chemicals, electric power, and other costs required to meet customer and system needs not included in (a) and (b) above.

(2) Accounting

Subregional facilities accounting shall be documented in accordance with generally accepted accounting practices acceptable to the Participants.

5. ADMINISTRATIVE, LEGAL AND OTHER PROVISIONS

A. Each Signatory Member shall designate in writing their representative responsible for coordination and implementation of the JOA and the subsequent IAs. The designated individuals will be the primary contact for all project approvals and communication and shall prepare and publish a schedule and plan to facilitate the planning, design and day-by-day operation of facilities associated with the subsequent IAs.

B. Signatory Members may propose Amendments to this JOA at any time. Signatory Members shall vote on proposed Amendments at the Annual Meeting. A quorum of Signatory Members present shall approve any Amendments to this JOA prior to their submittal to Signatory Members city councils and/or water district boards for approval. A Special Meeting of the Signatory Members may be called for the purpose of amending this JOA by two thirds of the Signatory Members.

C. A Signatory Member may withdraw from this JOA by providing 120 days notice to other Signatory Members. Notice shall be provided to each Signatory Member in writing and shall include the reason for withdrawal.

D. This JOA shall remain in full force unless terminated by mutual agreement. Termination or withdrawal shall not affect any Interlocal Agreements negotiated under this JOA.

IN WITNESS WHEREOF, the SKCRWA members hereto have caused this agreement to be executed by their proper Officers on the 28 day of MAY 1997.

By: Glenn Pulliam
Title: mayor
City of Algona
Date: 1-21-97

Attest:

By:

Approved As To Form:

By:

By: Charles A. Booth
Title: Mayor
City of Auburn
Date: 12/6/96

Attest:

By: Robin Worthington

Approved As To Form:

By:

By: Howard Botts
Title: MAYOR
City of Black Diamond
Date: 12-17-96

Attest:

By:

Approved As To Form:

By:

By: Jim White
Title: JIM WHITE, MAYOR
City of Kent
Date: 5-28-97

Attest:

By: Brenda Jacobsen

Approved As To Form:

By: Thomas C. Bulleh
ASS'T. CITY ATT'Y.

By: Jay J Hornsby
Title: President, Board of Commissioners
Covington Water District
Date: 1/6/97

Attest:

By:

Approved As To Form:

By:

By: Donald L. P. Miller
Title: Commissioner
Lakehaven Utility District
Date: 1/13/97

Attest:

By:_____

Approved As To Form:

By:_____

By: Ron Soren
Title: DISTRICT MGR
Soos Creek Water and Sewer District
Date: 5/21/97

Attest:

By:_____

Approved As To Form:

By:_____

By: Gale L. Randall
Title: PRESIDENT OF THE BD
King County Water District #111
Date: 11-04-96

Attest:

By:_____

Approved As To Form:

By:_____

By:_____
Title:_____
_____
Date:_____

Attest:

By:_____

Approved As To Form:

By:_____

By:_____
Title:_____
_____
Date:_____

Attest:

By:_____

Approved As To Form:

By:_____

By:_____
Title:_____
_____
Date:_____

Attest:

By:_____

Approved As To Form:

By:_____

South King County
Regional Water Association
Joint Operating Agreement

Exhibit A
Check List for Interlocal Agreements

1. Project Title

2. General

   - List of Utilities to be parties to the Interlocal Agreement (IA) and approval of the appropriate city councils and/or water district boards.
   - Consistency with the Joint Operating Agreement (JOA).
   - Description of need for the project.
   - Listing of potential wholesale customers for the water in accordance with Section 4.C of the JOA.
   - Recognition of assessment of costs associated with development of JOA in accordance with Section 4.B of the JOA.
   - Recognition of right of first refusal to excess capacity of Signatory Members of the South King County Regional Water Association (SKCRWA) in accordance with Section 4.C of the JOA.
   - Recognition that capacity and water rights are available to meet the needs of the IA.

3. Description of Project

   - Include a drawing (or description) which identifies all the facilities to be considered within the IA. Included within the description should be all jointly or solely owned facilities that are to be operated or paid for by a party to the IA.
   - Description of long term ownership of the facility.
   - Identification of the party responsible for operation and/or maintenance of the facility.
   - Identification of the party responsible for payment for the design and construction of the facility.

4. Project Costs, Financing, Capacity Rights

   - Description of all project costs and the allocation to each party.
   - Definition of capacity rights for all facilities.
   - Definition of cost sharing for long-term maintenance for each facility.
   - Definition of method of reimbursement for moneys expended (if required).

- Description of any applicable latecomer fees or hook-up charges.
- Description of requirements for record keeping and monitoring of costs.

5. Project Design and Construction Management

    - Definition of overall project management responsibilities.
    - Definition of design and construction management responsibilities for individual facilities.
    - Description of basic periodic meeting schedule for review of project progress.

6. Conditions of Service
    - Limitations to source sharing or delivery of water (if any).
    - Design criteria for the project facilities.
    - Minimum and maximum flow rates and pressures.
    - Items specifically excluded from the project.

7. Term of Duration of the Agreement

    - Discussion of the length of time the agreement is in effect as well as the method to terminate the agreement and succeeding agencies' obligations.

8. Amendments

    - Method by which the agreement could be amended.

9. Hold Harmless, Liability Language, etc.

JURISDICTION DIVIDER

Water & Sewer Risk Management Pool

Resolution # 361-02-96
KING COUNTY WATER DISTRICT #111

A Resolution of the Board of Commissioners of King County Water District #111, King County, Washington, replacing Resolution #332-06-94 approving a Sewer and Water District Mutual Aid Agreement .

WHEREAS, King County Water District #111 ("District"), is a municipal corporation of the State of Washington located on the East Hill of Kent, Washington and is engaged in the supply and distribution of water within the geographic confines of the District; and

WHEREAS, the District contemplates that, in the future, there may be disasters or emergencies which will require action which the District may be unable to perform with available district resources and personnel; and

WHEREAS, the District has the opportunity to enter into a mutual aid agreement with other water and sewer agencies to provide mutual aid to each other in the event of a disaster or emergency; and

WHEREAS, the Board of Commissioners of the District has determined that it would be in the best interest of the District to enter into a mutual aid agreement with other agencies to facilitate proper District action in the event of a disaster or emergency.

ORIGINAL

NOW THEREFORE, IT IS HEREBY RESOLVED BY THE BOARD OF COMMISSIONERS OF KING COUNTY WATER DISTRICT NO. 111 AS FOLLOWS:

1. The District hereby approves the "Sewer and Water Agency Mutual Aid Agreement" attached hereto as Exhibit "A" and commits the District to abide by its terms.

2. The District staff is directed to forthwith forward a certified copy of this resolution and the original "Sewer and Water Agency Mutual Aid Agreement" to the Water & Sewer Risk Management Pool.

3. Resolution No. 332-06-94 is hereby repealed.

PASSED by the Board of Commissioners of King County Water District #111, King County, Washington, at a meeting thereof on the 26th day of February, 1996.

KING COUNTY WATER DISTRICT
#111, BOARD OF COMMISSIONERS

G. L. "Dutch" Randall, President

Gary G. Cline, Commissioner

Charles E. Wilson, Commissioner

SEWER AND WATER AGENCY MUTUAL AID AGREEMENT

THIS MUTUAL AID AGREEMENT is by and between all sewer and water agencies that have authorized this agreement under the procedures of this agreement.

RECITALS:

A. RCW Chapter 39.34 authorizes sewer and water agencies to contract with each other to provide services.

B. The agencies desire to provide resources to any other agencies that request assistance to handle a disaster or emergency.

AGREEMENT

It is agreed by the agencies as follows:

1. Request for Assistance. An agency, through its designated official, may request another agency to send resources to deal with a disaster or emergency. A request for assistance may be oral or written. If the request is oral, it shall be confirmed in writing by the designated official as soon as practicable after the request. Each request shall describe the equipment, personnel, expertise and other resources that are needed to address the disaster or emergency.

2. Definition of Disaster or Emergency. A disaster or emergency is an event or situation which (1) demands immediate action to preserve public health or protect life or property or (2) reaches such a dimension or degree of destructiveness as to warrant the Governor of the State of Washington declaring a state of emergency.

3. Response to Request. The responding agency, through its designated official, shall, as soon as possible, determine whether resources are available to respond to the request for

ORIGINAL

disaster or emergency assistance. Following the determination, the responding agency's designated official shall, as soon as possible, advise the requesting agency of the availability of resources and, if resources are available, the approximate time when such will be provided. The judgment of the responding agency's designated official shall be final as to the availability of resources. A responding agency shall not be liable to the requesting agency or any person or entity for failing to respond to a request for assistance or provide resources.

4. Control of Resources. Resources of the responding agency that are made available to the requesting agency shall, whenever possible, remain under the control and direction of the responding agency. The requesting agency shall coordinate the activities of resources of the responding agency. The responding agency shall retain the right to withdraw some or all of its resources whenever they are needed by the responding agency. Notice of intention to withdraw shall be communicated to the requesting agency's designated official, or the official's designee, as soon as possible.

5. Status of Personnel. All privileges, immunities, rights, duties and benefits of officers and employees of the responding agency shall apply while those officers and employees are performing functions and duties within the requesting agency, unless otherwise provided by law.

6. Indemnification. An agency shall defend, hold harmless and indemnify all other agencies, and their officers and employees, from any and all claims, suits or actions, including the cost of defense, arising from the willful or negligent acts and omissions of its own officers and employees while operating under this agreement.

7. Insurance. An agency shall maintain insurance for the activities of its resources while operating outside of the agency under this Agreement, which insurance shall be at least equal to the insurance the agency maintains for the activities of its resources while operating within the agency.

8. Cost Reimbursement The requesting agency shall reimburse the responding agency for the cost of providing assistance. The reimbursement shall be based upon the responding agency's schedule of hourly or daily rates for personnel and costs of equipment. Reimbursement shall be made within 90 days after receipt by the requesting agency of an itemized voucher of costs.

9. Operational Procedures. The agencies shall establish operational, cost reimbursement and planning procedures for carrying out this Agreement.

10. Authorization: Effective Date: Duration. An agency shall authorize and approve this agreement by resolution. This agreement shall be effective upon adoption of authorizing resolutions by two agencies and shall remain in effect as long as two or more authorizing resolutions are in effect. Upon adoption of an authorizing resolution and execution of this agreement, a agency shall send a certified copy of the resolution and the agreement to the Washington Association of Sewer and Water Districts. The Association shall maintain a list of all agencies and shall send an updated list to all agencies whenever an agency is added to or eliminated from the list.

11. Termination. This agreement shall remain binding upon an agency until it repeals the authorizing resolution. Upon adoption of a repealing resolution, the agency shall send a certified copy of the resolution to the Washington Association of Sewer and Water Districts.

THIS PAGE INTENTIONALLY BLANK.

Appendix E

Developer Extension Agreement

THIS PAGE INTENTIONALLY BLANK.

Lake Meridian
WATER DISTRICT

27224 144th Avenue S.E., Kent, Washington 98042
Phone: 253-631-3770 / Fax: 253-631-8072

Email: customerservice@lakemeridianwater.com

Application and Agreement for Developer Extension Agreement

Plat Name _____

Developer _____

Dated _____
(DE is valid for one year from the date of District signature.)

Revised 07/2022

Lake Meridian Water District

Developer Extension Application & Agreement

Table of Contents

	Page #
Developer Extension Application and Agreement	A-1 – A-16
Application and Agreement to construct extension to water system	
Developer Extension Deposit	A-5 – A-9
Schedule of Charges and Information	
General Provisions	C–1 – C-13
Forms	D-1 - D-40
Irrevocable Letter of Credit	D-1 – D- 2
Cash Performance and Pledge of Monies Agreement	D-3 – D- 7
Performance Bond	D-8 – D- 9
Cash Maintenance and Pledge of Moines Agreement	D-10 – D-14
Maintenance Bond	D-15 – D-15
Bill of Sale	D-16 – D-19
Easement for Water lines	D-20 – D-23
Application for Reimbursement Agreement	D-24 – D-24
Reimbursement Agreement	D-25 – D-29
Assignment and Covenant to Perform	D-30 – D-30
Agreement and Covenant	D-31 – D-32
Letter of Understanding	D-33 – D-33
Certificate of Insurance (sample)	D-34 – D-34
Participation Agreement	D-35 – D-37
No-Protest Agreement for Annexation	D-38 – D-40
Pre-Construction Meeting	E - 1 – E - 5
Developer Extension Checklist	F - 1 – F – 5

SAMPLE

Lake Meridian Water District

Developer Extension Application and Agreement

PROJECT INFORMATION

Name of development _____

If subdivision or short plat, number of lots _____

Meter size required _____

Date design fees paid _____

Date agreement signed _____

DEVELOPER

Name: _____

Address: _____

_____

Phone: _____

Cell: _____

Email: _____

CONTRACTOR

Name: _____

Address: _____

_____

Phone: _____

Cell: _____

Email: _____

Contractor's Registration #_____

Designate Developer Status:

____ Corporation

____ Partnership

____ Limited Liability Company

____ Sole Proprietorship

DEVELOPER ENGINEER

Name:

Address:

Phone:

Email:

Contact:

District Engineer
BHC Consultants, LLC

SAMPLE

APPLICATION AND AGREEMENT TO CONSTRUCT
EXTENSION TO WATER SYSTEM

The undersigned, as the Developer herein, hereby makes application to the District for permission to construct and connect a private extension to the District's existing water system as herein provided and pursuant to Chapter 57.22 RCW. If this application is accepted, the undersigned, in consideration of the mutual promises and covenants herein contained, agrees to the terms and conditions of this Developer Extension Agreement and as follows:

1. Location of Water System Extension.

The proposed water system extension (the "extension") will be installed in streets and other approved rights-of-way and/or easements and shall be for the use and benefit of the real property hereinafter described, which real property is owned by the Developer and/or other owners for whom the Developer is acting as agent. Any such owners have joined in this application and are designated on the signature page hereof as "additional owners." A legal description of the real property including the Tax Lot Number(s); a common address, if applicable; and a map/depiction of the real property is attached hereto, entitled “Attachment A”.

2. Description of Extension.

The proposed extension will consist of approximately _____ lineal feet of water main and appurtenances and shall be installed in accordance with this Agreement and with the Plans and Specifications provided by the District at the cost of the Developer as hereinafter provided, or in accordance with such Plans as Developer's Engineer may prepare in conformity with District specifications and approved by the District.

SAMPLE

3. Fees

Design Fee (District Engineer)	$ 00.00
Design Review Fee (Developer's Engineer), one review	$ 3,600.00
Offsite Design Survey Fee	$ 00.00
Permit Application Preparation Fee	$ 00.00
Offsite Easement Preparation Deposit	$ 00.00
DUE WITH APPLICATION	**$ 3,600.00**

Construction Survey and CRDs (as-builts) Deposit	$ 4,054.80
Construction Observation & Administration Deposit	$ 8,691.60
Lake Meridian Water District Inspection Deposit	$ 375.00
Onsite Easement Preparation Deposit	$ 1,800.00
*Construction Survey Provided by Developer	
DUE PRIOR TO PRE-CONSTRUCTION MEETING	**$ 15,521.40**

SAMPLE

NOTE: PRE-CONSTRUCTION MEETING WILL NOT BE SCHEDULED UNTIL ALL FEES AND DEPOSITS HAVE BEEN PAID.

4. Other fees, related to this project and due as a condition of water service at time of Bill of Sale

Latecomer/Special Connection Charge No. _____ Project Name_____	$ 00.00
No Protest Annexation Agreement	$ 00.00
Capital Facility Charges	See Exhibit

The Developer shall pay all reimbursable charges owing as a condition of final acceptance of the extension improvement. Reimbursement charges shall be owing for:

(1) Any existing reimbursement agreement with the District applicable to the Developer extension/real property; or

(2) Any reimbursement agreement in force and effect applicable to the Developer extension/real property at the time of the District's final acceptance of the Developer extension.

5. PAYMENT OF FEES, CHARGES, AND DEPOSITS

The following is a description of the fees, charges, and deposits, and the payment terms thereof attributable to this Agreement, and/or necessary to provision of service by the District:

DESIGN FEE -DISTRICT ENGINEERED METHOD -A Design shall be paid by the Developer to the District in an amount equal to the current rate schedule adopted by Resolution for design fees for water main. Payment of the design fee is in consideration of the following basic work:

(1) Preparation of contract plans and specifications;
(2) Regular and ordinary administrative costs attributable to special facilities;

PLAN REVIEW FEE -DEVELOPER ENGINEERED -A Review Fee shall be paid by the Developer to the District for the District's review of plans prepared by the Developer's engineer to determine compliance with District standards and the requirements of other agencies having regulatory authority or control over the extension. The fee shall be paid at the time of application, and covers only one cycle of plan review. A "cycle" is one submission of plans; a review of the plans by the District and response with required changes; and one review of the plans as corrected. Any additional required reviews shall be deemed "additional" and charged as provided for in this Agreement.

OFFSITE DESIGN SURVEY FEE -The Offsite Design Survey Fee shall be paid at the time of Application in an amount equal to the current rate schedule for survey by the District for any offsite facilities required by the project.

PERMIT APPLICATION PREPARATION FEE -DISTRICT ENGINEERED METHOD

(1) Plans and application prepared for Fire Marshal approval.

SAMPLE

OFFSITE EASEMENT PREPARATION DEPOSIT -The estimated cost as determined by the District for preparation, legal fees, recording fees and 20% administrative cost attributable to offsite easement preparation and processing. To the extent that actual easement preparation costs exceed this amount, they shall be deemed "additional" and charged for as provided in this Agreement.

CONSTRUCTION SURVEY AND CRDs (AS-BUILTS) DEPOSIT -DISTRICT AND DEVELOPER ENGINEERED -A deposit as determined by the District toward the estimated cost of the following:

A. Construction staking (horizontal only).
B. Preparation of as-built record of extension.
C. Preparation of on-from-to for Bill of Sale.

CONSTRUCTION OBSERVATION AND ADMINISTRATION DEPOSIT -A deposit as determined by the District, payable prior to the Pre-Construction Meeting, to pay the estimated amount of the following charges/fees, provided the Developer shall be required to pay the actual costs of such charges and fees:

A. Construction Observation Charge. The actual construction observation costs attributable to the work, including 20% for District administrative costs.
B. Engineering Administrative Charge. The actual cost attributable to the work for the District's engineer to administer the construction of the project, including but not limited to attendance at Pre-Construction Meeting, review and recommendation of field revisions, plus 20% for District administrative costs. To the extent that such costs are attributable to Developer field revisions or deficient work, they shall be deemed "additional" and charged for as provided for in this Agreement. The fee is payable prior to the pre-construction meeting.

ONSITE EASEMENT PREPARATION DEPOSIT -A deposit as determined by the District toward the estimated actual cost for preparation, legal fees, recording fees and 20% administrative cost attributable to onsite easement preparation and processing. To the extent that actual easement preparation costs exceed this amount, they shall be deemed "additional" and charged for as provided for in this Agreement.

LAKE MERIDIAN WATER DISTRICT INSPECTION DEPOSIT -A deposit as determined by the District toward the actual cost for District inspection, including but not limited to purity testing, punch list inspection, plus 20% for District administrative costs. To the extent that actual inspection costs exceed this amount, and/or to the extent such costs are attributable to Developer field revisions or deficient work, they shall be deemed "additional" and charged for as provided for in this Agreement.

SAMPLE

ADDITIONAL FEES AND CHARGES - Additional fees and charges shall be paid by the Developer to the District for the costs of work required in addition to the basic work. Additional fees will be based upon the District's current schedule of costs for District employees, and actual engineering, legal and other charges for additional work, plus 20% of the total thereof as the District's administrative costs attributable thereto. Such fees are due upon receipt of the District's invoice, and payment is a prerequisite for acceptance by the District of the extension.

Additional fees and charges may include, but are not limited to the following:

A. Revisions to the contract plans and specifications and other work occasioned by any act of the Developer, the Developer's engineer, or the Developer's contractor.
B. Cost of preparing, as applicable, permit applications for King County or appropriate City Grading and Clearing Permit, Shorelines Substantial Development Permit, Special Use Permit, Right-of-Way Use Permit; Washington State Department of Transportation Right-of-Way Permit, Army Corps of Engineers Section 404 Permit, hydraulic project approvals, and any railway right-of-way permits, including application costs, fees, bonds, insurance, filing and administrative costs.
C. Costs attributable to obstruction, delay or prevention of 'construction staking, establishment of benchmarks, and/or replacement of stakes and additional staking.
D. Costs of obtaining King County, appropriate city, and/or State of Washington or other governmental agency permits, franchises, LSA boundary adjustments, annexations, or required approvals, and charges for any inspections performed by those agencies. (Charges for such services are established by the individual agency and not by the District.)
E. Easement preparation costs, including title policies, as-built surveys, easement drafting, and any necessary addenda or special stipulations required therein, and Resolutions of acceptance to the extent such costs exceed the applicable deposit.
F. Costs attributable to any required environmental assessment and evaluation, including SEPA Checklists and Determinations.
G. Costs of preparation of any special agreements between the Developer and the District, and Resolutions of acceptance.
H. Actual construction observation costs, including costs attributable to Developer field revisions and/or defective work.
I. Any and all costs, charges, expenses and damages attributable to failure of the Developer to comply with this Agreement and/or the requirements of any governing agency.
J. Any and all costs, charges, and expenses incurred by the District to perform or complete any of those functions identified to be performed by the Developer's engineer under the Developer Engineered Method, as described in Section 6.

SAMPLE

K. All costs and expenses billed to the District by the District's engineer attributable to engineering advice to Developer and/or its engineer as a result of inability or failure of Developer's engineer to perform the services described in Section 10.
L. Re-notification of customers if Contractor is unable to meet pre-arranged shutdown schedule.
M. All costs, damages and expenses', including reasonable attorney fees, incurred by the District in responding to, and/or defending claims made by third parties for acts of the Developer, its engineer or contractor.

Note: All amounts remaining from deposits or other funds, including, but not limited to those paid pursuant to this or any other Section of this Agreement, may first be applied by the District to unpaid balances resulting from the performance of any other portion of this Agreement, and only the balance thereof, after such application, shall be refunded to the Developer.

In the event any invoice authorized by this Agreement is not paid within 30 days, it shall be considered delinquent. Simple interest of 12% per annum shall be added to the balance of all delinquent invoices until paid. After 60 days from the date of invoice, the District may stop all work by it and the District's engineer required under this Agreement. After 120 days from the date of the invoice, the District may record lien(s) against the property for the original invoice amount, plus the recording fee, and enforce such lien(s) to recover payment in full in accordance with RCW 57.08.081, or as such statute may be revised or amended.

SAMPLE

6. PREPARATION OF PLANS BY DEVELOPER'S ENGINEER

Developer may have its own engineer prepare the Design and Plans for the extension according to District Standards and Specifications or have the District Engineer prepare the Design and Plans. If Developer elects to have its own engineer prepare the Design and Plans, then the following requirements shall apply:

NOTE: UNDER THE DEVELOPER ENGINEERED METHOD THE DEVELOPER'S ENGINEER IS REQUIRED TO PERFORM ALL OF THE FOLLOWING FUNCTIONS WITH REGARD TO THE DEVELOPMENT:

A. Determine District's construction specifications and standards, and advise Developer;
B. Preparation of contract plans and specifications;
C. Send plans to agencies for approval;
D. Offsite design survey;
E. Provide five (5) sets of approved contract plans and specifications to the District;

F. Provide AutoCAD 2013 (DWG) electronic files via electronic mail, or CD Rom; files to include any special fonts used, all external cross-references, lot and street layout with computation data, street, sewer and storm plan and profile data, and site topography and proposed site grading plan; and other utilities. Title blocks may be removed.

G. Preparation of SEPA Checklist and Environmental Impact Statement, if required, or other environmental documents necessary for compliance with SEPA.

H. Pay the review fee for the District to review and approve the Design and Plans.

I. Upon written approval from the District of the preliminary water design and Plan, Developer Engineer shall prepare a final Plan and submit four (4) copies of the final Plan to the District.

J. Upon approval of the final Plan by the District the original Mylar drawings along with electronic files shall then be submitted to the District and shall become the property of the District in accordance with this Agreement.

K. Upon receipt of the original Mylar Plan drawings, the District will secure such permits and approvals for the Plan as may be necessary. Should changes to the Plan be required to receive such permits and approvals, Developer Engineer shall make all changes as required.

L. After receiving such permits and approvals of the Plans as may be necessary, the District will then complete the Developer Extension checklist form which estimates the cost of construction for the extension and fee calculations for purposes of the fees to be paid by Developer, and the bonds to be posted by Developer, all in accordance with this Agreement. The District will prepare and submit to the Developer invoices for all costs owing. Such invoices shall be paid in full by the Developer to the District before construction of the work/extension improvement commences.

SAMPLE

7. MATERIAL SUBMITTALS

Developer shall furnish to the District prior to the pre-construction conference shop, catalog, and other appropriate drawings and information for all equipment and materials to be used on the water main extension. The District may reject materials that do not conform to the latest version of the Standard Details and Standard Specifications and Policy Statement as published on the District website. Failure of the District or its agents to reject materials at the time the

material list is submitted shall not be a waiver of the District's right to reject such materials at a later time.

7. PERFORMANCE GUARANTEE

Developer shall furnish to the District prior to the pre-construction conference a performance guarantee of a type and in a form as determined by the District, in its sole discretion, in an amount equal to the District Engineer's estimated cost of the extension or contractor bid price. The performance guarantee shall require completion of all work within a period of twelve (12) months from the date of the Agreement with the District in accordance with the Agreement, the Plans and Specifications and other requirements of the District. The District in its sole discretion may also require a payment bond of a type and in a form as determined by the District requiring the payment by the Developer of all persons furnishing labor and materials in connection with the work performed under the Agreement, and shall hold the District harmless from any claims therefrom. Any payment bond required by the District shall be provided to the District prior to the pre-construction conference or following commencement of work as a condition of the District granting final acceptance of the work referenced herein. No third person or party shall have any rights under any performance or payment guarantee the District may require from the Developer and such are provided entirely for the benefit of the District and the Developer and their successors in interest.

SAMPLE

8. FINAL ACCEPTANCE - CONDITIONS PRECEDENT

Compliance with all terms and conditions of this Agreement, the Plans and Specifications prepared hereunder and other District requirements shall be a condition precedent to the District's obligation to accept the bill of sale to the extension improvements and to the District's Agreement to maintain and operate the extension improvements and to provide water service to the real property that is described in this Agreement.

The District shall not be required to allow any connection to the District water system of any portion of the real property described in this Agreement if there are any fees or costs unpaid to the District under this Agreement or there are other fees or charges owing the District by the Developer pursuant to other District requirements.

The District shall not be obligated to provide water service to the real property described in this Agreement if construction by third parties of facilities to be conveyed to the District has not been completed and title accepted by the District if such third-party facilities are necessary to provide water service to the property described in this Agreement.

The District will accept title to the extension improvements at such time as all work on the extension improvements has been completed, and the District has made final inspection and given its approval to the extension improvements as having been completed in accordance with this Agreement, the Plans and Specifications and other requirements of the District.

Such acceptance by the District shall not relieve the Developer of the obligation to correct defects in labor and/or materials as herein provided and/or the obligations set forth in applicable paragraphs hereof. After acceptance of the extension improvements by the District and the transferring of title to such extension improvements as set forth herein, the Developer shall furnish to the District a maintenance bond (cash or letter of credit) which shall continue in force from the date of acceptance of said extension for a period of two years. The bond shall be in a form as contained herein and shall require the Developer and/or the bonding company to correct the defects in labor and materials which arise in said system for a period of two years from the date of acceptance of the system and transfer of title to the District. The maintenance bond shall be in an amount equal to ten (10) percent of the cost of said extension, but not less than two thousand dollars ($2,000.00). Prior to the release of such maintenance bond, the Developer shall be required to clean and inspect the extension improvements at the Developer's sole cost and expense to confirm that such improvements are free from defects in labor and materials.

SAMPLE

9. PROCEDURE FOR ACCEPTANCE.

Acceptance of title to the extension improvements will be made by the District. Prior to such acceptance, an executed bill of sale of the extension improvements in a form approved by the District and containing the warranties required by this Agreement shall be executed by the Developer and any additional owners and delivered to the District.

10. WARRANTIES OF DEVELOPER.

The bill of sale to be provided by the Developer to the District shall contain the following warranties with the District as beneficiary:

A. Developer is the owner of the extension improvements, the same are free and clear of all encumbrances and Developer has good right and authority to transfer title thereto to the District and will defend the title of the District against the claims of all third parties claiming to own the same or claiming any interest therein or encumbrance thereon; and

B. The extension improvements are in proper working condition, order and repair, and are adequate and fit for the intended

purpose of use as a water system and as an integral part of the water supply and distribution system of the District; and

C. For a period of two years from the date of final acceptance of the extension improvements by the District, the extension improvements and all parts thereof shall remain in proper working condition, order and repair; and Developer shall repair or replace, at its expense, any work or material which may prove to be defective during the period of the warranty.

9. EFFECT OF ACCEPTANCE

Acceptance by District shall cause the extension improvements to be subject to the control, use and operation of the District and all regulations and conditions of service and service charges as the District determines to be reasonable and proper.

10. PHASED CONSTRUCTION

The extension improvements may be constructed in phases with prior Board approval as conditioned and as specifically designated in the Plans and Specifications. Acceptance may also be on a phased basis when all requirements have been met.

11. CORRECTION OF DEFECTS OCCURRING WITHIN WARRANTY PERIOD

When defects in the extension improvements are discovered within the warranty/maintenance period, Developer shall start work to remedy any such defects within seven (7) days of notice by the District and shall complete such work within a reasonable time. In emergencies, where damages may result from delay and where loss of service may result, corrections may be made by the District upon discovery, in which case the cost thereof shall be borne by the Developer. In the event the Developer does not commence and/or accomplish corrections within the time specified, the work may be accomplished by the District at its option, and the cost thereof shall be paid by the Developer.

Developer shall be responsible for any expenses incurred by the District resulting from defects in the Developer's work, including actual damages, costs of materials and labor expended by the District in making repairs and the cost of engineering, inspection and supervision by the District or the District Engineer.

12. LIMITATION OF PERIOD OF ACCEPTANCE

The extension improvements shall be completed and accepted within twelve (12) months of the date of this Agreement. If the extension is not

SAMPLE

completed and accepted within the twelve (12) month period, then this Agreement and all of the Developer's rights herein may terminate and cease at the discretion of the District; provided the District shall also have the right to specifically enforce the Agreement, including using the performance guarantee to complete the extension improvements or make demand on any surety providing a performance bond to complete the extension improvements.

.

In the event the District elects to terminate this Agreement, the Developer shall be required to make a new application for extension agreement to the District. Any such new agreement entered into between the District and the Developer pursuant to a new application shall be subject to any new or amended resolutions or policies which have taken effect since the execution of the terminated agreement.

SAMPLE

13. WARRANTY OF AUTHORITY

The Developer and any additional owners warrant that they are the owners of the real property described in this Agreement. Developer shall also upon request provide a title report or other documentation to the District's satisfaction establishing that the parties executing this Agreement are the owners of all the real property to be served by the extension improvements described herein.

14. RATES AND CHARGES

The real property described in this Agreement shall be subject to all rates and charges established by the District.

15. SUBLETTING AND SUBCONTRACTING

Developer is fully responsible for the acts and omissions of its contractors and persons employed, directly or indirectly by it's contractors, as well as the acts and omissions of persons directly or indirectly employed or retained by the Developer.

16. NO ASSIGNMENT WITHOUT DISTRICT APPROVAL

The Developer rights and responsibilities arising out of this Agreement are not assignable unless District consent is obtained, as conditioned by the District, prior to any proposed assignment. Written documents as required by the District of any District approved assignment shall be filed with the District by the Developer at the time of any assignment.

17. STANDARD SPECIFICATIONS AND DETAILS

Refer to the section entitled "Standard Specifications" for Materials, Construction, Standard Details Specifications, and Detail Standards for Design completed by Engineers other than District Engineer, which are attached hereto and made a part of this agreement.

SAMPLE

ACCEPTANCE OF THIS APPLICATION BY THE DISTRICT CONSTITUTES A CONTRACT WITH THE APPLICANT, THE TERMS OF WHICH ARE EACH PARAGRAPH OF THIS AGREEMENT, THE DISTRICT'S MATERIALS, CONSTRUCTION AND STANDARD DETAILS SPECIFICATIONS SHEETS, THE EXTENSION IMPROVEMENT PLANS AND DESIGN APPROVED BY THE DISTRICT BOARD OF COMMISSIONERS AND ALL OTHER APPLICABLE DISTRICT REGULATIONS AND WASHINGTON LAW, INCLUDING CHAPTER 57.22 RCW.

UPON EXECUTION HEREOF, THE DISTRICT MAY RECORD A NOTICE OF EXECUTION OF DEVELOPER EXTENSION AGREEMENT AGAINST THE PROPERTY AS REASONABLY NECESSARY TO NOTIFY PERSONS DEALING WITH THE PROPERTY THAT IT IS SUBJECT TO THE TERMS HEREOF. UPON COMPLETION OF THE PROJECT, THE DISTRICT MAY RECORD A NOTICE OF COMPLETION OF DEVELOPER EXTENSION AGREEMENT. THE NOTICES SHALL BE IN THE FORM DESCRIBED UNDER "DOCUMENTS" HEREIN.

DEVELOPER, _____, a ____ corporation, ___ partnership, ___ joint venture, ___ limited liability company, __ sole proprietorship.

NOTE:

1. If the Developer is a corporation, this Agreement must be executed by its duly authorized representative and the Developer hereby warrants same.

2. If the Developer is a partnership, at least one of the general partners must sign this Agreement and indicate his/her capacity as such.

3. If the Developer is a limited liability company, this Agreement must be executed by its duly authorized manager.

By _____

Its _____

Print name_____

SAMPLE

STATE OF WASHINGTON)
) ss:
COUNTY OF_____)

I certify that I know or have satisfactory evidence that _____ is the person who appeared before me, and said person acknowledged that s/he signed this instrument, on oath stated that s/he was authorized to execute the instrument, and acknowledged it as the_____ of_____ _____ to be the free and voluntary act of such entity for the uses and purposes mentioned in the instrument.

DATED:_____

SIGNATURE:_____

NAME:_____
(Print Name)
Notary Public in and for the State of Washington.
Commission Expires: _____

SAMPLE

Lake Meridian Water District

_____
SIGNATURE OF DISTRICT MANAGER
approving Application and Agreement

Date_____ , 20_____

THIS PAGE INTENTIONALLY BLANK.

Appendix F

Standard Specifications & Policy Statement Standard Details

THIS PAGE INTENTIONALLY BLANK.

LAKE MERIDIAN WATER DISTRICT

STANDARD SPECIFICATIONS AND POLICY STATEMENT

Table of Contents

1. Policy
2. Annexation
3. Developer's Extension Agreement
4. Approval of Application for Extension of Main
5. Information for Plan Preparation
6. Water Installer
7. Relation between Applicant and District
8. Design Standards
    a. General Requirements
    b. Main Location
    c. Main Size
    d. Fire Hydrants
    e. Valves
    f. Meters
    g. Cross Connection
9. Drafting Standards
10. Materials
    a. General
    b. Ductile Iron Pipe
    c. Fittings
    d. Fire Hydrants
    e. Gate Valves
    f. Valve Box
    g. Service Connections
    h. Paint
    i. Bore Specifications
    j. Back Flow Prevention

11. Construction
    a. Existing Utilities
    b. Road Maintenance and Restoration
    c. Water Main
    d. Water Service
    e. Connecting to Existing Water Mains
    f. Fire Hydrants and Gate Valves
    g. Water Supply
    h. Construction Schedule
    i. Concrete Blocking
    j. Pipe Bedding
    k. Water Works Testing
    l. Disinfection
12. Final Inspection and Acceptance

LAKE MERIDIAN WATER DISTRICT

STANDARD SPECIFICATIONS AND POLICY STATEMENT

Scope

The intent of this statement of policy is to clarify what action is required by persons seeking to connect to the water system of Lake Meridian Water District.

1. Policy

It is the policy of the District to encourage extension of the existing water supply mains to serve either proposed developments or properties not currently being served that are within the boundaries of the District. Any developer or property owner wishing service will be required to extend the main to the furthest extreme of the property to be served, where it is likely that they will be needed to connect to future mains. Since it is impossible to predict how or when vacant property will be improved, the mains will need to be designed and constructed at the time the property layout is determined and will be designed to serve all property in any proposed development. All water mains shall be designed in accordance with good engineering practice and as outlined herein by a professional engineer and constructed in accordance with the specifications described below.

These extensions (a) may be constructed by the property owner or developer in accordance with these specifications and regulations; OR (b) may be constructed by the District and financed by means of assessments against the property benefited with the limits of a formalized U.L.I.D. (Utility Local Improvement District).

2. Annexation

It is the policy of the District to not serve property which is outside the District boundaries.

Territory adjacent to the District which is not already part of another water district may be annexed to this District in accordance with state law. Information regarding annexation procedures will be furnished upon request.

3. Developer's Extension Agreement

Application for extension of the water supply main to serve either proposed developments or properties not currently being served, shall be made by the owner of the property or his agent, on the form supplied by the District entitled: *"Agreement for Private Developer".*

4. Approval of Application for Extension of Main

Each application shall be considered by the Board of Commissioners of the District and approved or rejected. The owner/developer shall be notified in advance of the meeting at which the application will be considered. After consideration by the Board, the application will be accepted, (or accepted as modified by agreement), or rejected. Notice of the Board's action shall be mailed to the applicant. If accepted, the applicant shall then be entitled to proceed with construction of the water main extension in accordance with the District's standard specifications.

5. Information for Plan Preparation

The owner/developer has two options for preparation of the design plan drawings; (a) District designed facilities; OR (b) developer designed facilities.

Design by the developer shall be completed in strict adherence to the design standards outlined in this policy.

For "scope of work" or cost associated with either "District" or "developer" designed facilities, see form entitled: *"Statement of Development Fees".*

Prior to plan preparation by either the District's or developer's engineer, the developer shall submit a copy of the preliminary plan, approved road plan and storm drainage, sanitary sewer plan, topographic survey and any other plans for underground utilities. Any revision in plans or installed mains caused by any revisions in such plans shall be carried out at the sole expense of the Developer.

6. Water Installer

The developer must recognize that the facilities constructed as part of their project will ultimately become the property and responsibility of the District. The developer must further recognize that the quality of the material and workmanship used in installing these facilities directly impacts the service life of the utility and the operations and maintenance costs of the District. Therefore, the developers shall have all facilities installed by a licensed contractor whose main business is the installation of underground water systems. The contractor shall use only experience, competent, trained workers and shall demonstrate this competence throughout the execution of the work. Additionally, if the water main extension requires a connection to AC pipe, the contractor must provide proof of current AC Pipe Certification at the pre-construction meeting. The District reserves the right to withhold acceptance of the utility until the District is satisfied in its sole discretion that the facilities have been installed according to District policy and these standard specifications, applicable regulatory agency standards, and to the degree of quality acceptable to the District.

7. Relation between Applicant and District

It is expected that the applicant will extend normal courtesies to the District in giving reasonable notice of the time and place of work to be inspected. In particular, the applicant shall:

a. Notify the District in writing at least 3 days in advance of the time of beginning any construction.

b. Complete the work, including cleanup, to the point where the work complies with the plans and specifications and is ready for acceptance by the District within the time limit provided.

c. The contractor shall not operate any gate valves or make any connections to the existing water main without the necessary arrangement with the District. Specific requirements for connection to the water system shall be designed on the plans and subject to the approval of the District.

d. The contractor shall not remove any meter that has been installed by the District.

8. Design Standards

The following standards apply to the design of the distribution system facilities within the District. Additional requirement may be imposed by the District to meet special conditions.

a. General Requirements

This section outlines standards for design and construction of new water mains in the District. All main construction in the District shall be in accordance with the current comprehensive plan.

Any developer or property owner wishing service to property not currently being served by an existing water main will be required to extend the main in accordance with District policies. Since it is impossible to predict how or when vacant property will be improved, the mains will need to be designed and constructed at the time the property layout is determined and will be designed to serve all property in the development. All water mains shall be designed in accordance with good engineering practice and as outlined herein by a professional engineer and constructed in accordance with the specifications described below.

b. Main Location

The mains must be extended to the furthest extreme of the property to be served where connection to future mains is most like to occur. In addition, the District may require mains to be constructed on more than one, or up to all sides of the property. Loop systems will be a minimum of 8-inch diameter mains. Dead-end mains shall be avoided except where, in the opinion of the District, it would be unreasonable to require a looped system. All dead-end

mains will require a fire hydrant.

c. Main Size

Mains shall be sized in accordance to the Water System Plan or as required to meet hydraulic conditions of the development. Mains shall be sized such that normal maximum velocity does not exceed 10 feet per second.

All mains shall be sized to provide a minimum fire flow of 1,000 gpm in addition to the peak daily domestic requirement except where a higher fire flow is required by King County or other jurisdiction. Fire flow shall be analyzed for particular building construction or in accordance with the land use plan. A minimum of 3,000 gpm fire flow shall be used in all commercial, multi-family and industrial areas if another flow is not specified.

Minimum size in residential and commercial areas shall be 8 inches in diameter. A 4-inch or 6-inch main may be used in cul-de-sacs without fire hydrants where the length of the main does not exceed 300 feet and if it is the District's opinion that there is no reasonable possibility of extending the main now or in the future.

Normal minimum pipe size shall be determined by fire flow requirements for commercial and industrial areas.

Larger mains will be required for higher flow requirements or for mains with long distances between intersecting points. Detailed engineering designs shall be made for each individual system by considering the specific flow requirements and the hydraulic conditions for the development.

d. Fire Hydrants

The District reserves the right to review at their own option, the engineering calculations that are prepared by the developer. As a courtesy, the District will make available any field hydrant test data for use by the developer. All costs for such review shall be reimbursed to the District.

Fire hydrants shall be spaced to comply with King County codes or other Jurisdictions and in accordance with the following minimum requirements:

Residential – Single-Family/Duplex dwellings: Fire hydrants serving single-family dwellings or duplex dwellings on the individual lots shall be located per the following:

> **King County:** Fire hydrants within all jurisdictions need to be spaced a maximum of 600 feet apart. There needs to be a hydrant within 300 feet, vehicular travel distance, of all lots, up to 5 acres, in urban areas. Rural lots between 35,000 square feet and 5 acres do not need hydrants.
>
> **City of Covington:** Use King County guidelines.

City of Kent: Requires a maximum distance of 600 feet, vehicular travel distance, between hydrants, on single and dual family lots. There is a 300-foot maximum distance requirement, also vehicular travel distance, for multi family lots.

Other Use: Fire hydrants serving any use other than single family dwellings or duplex dwellings on individual lots shall be located not more than 300 feet on center and shall be located that at least one hydrant is located within 150 feet of all structures or uses. Such distances shall be measured along the path of vehicular access.

Any hydrant branch exceeding 50 feet in length shall be 8 inches in diameter. No more than one hydrant shall be installed on any dead-end 8-inch branch.

Note: All hydrants shall have Storz adapters unless local fire authority requires or dictates otherwise.

e. Valves

Valves should be installed at intersections with normal maximum spacing of 500 feet. The District may require additional valves as considered necessary for operation of the system. Auxiliary valves shall be installed on each hydrant branch. Pressure reducing, combination air/vacuum release or other special valves shall be installed as required.

f. Meters

Each single-family residential unit must be separately metered. Each commercial building or multiple family building shall be served with a separate meter. A double check detector assembly shall be installed in all fire protection sprinkler systems used to serve commercial, multiple family or other buildings.

g. Cross Connection

Cross-connection control: The Developer shall comply with all Government and District rules and regulations governing cross connections. Developers shall install and maintain backflow prevention devices required by the District as a condition of acceptance of the extension. All commercial water services shall be protected by an RPBA at a minimum. No branch connections allowed between the RPBA and the meter. See Standard Details 20 and 21.

9. Drafting Standards

Construction drawings shall be plotted on a 22" x 34" sheet signed by a licensed professional civil engineer currently registered in the State of Washington who has expertise in the design of public water systems.

All drawings shall be submitted in triplicate to Lake Meridian Water District for approval. At the time of submittal, the developer is required to provide a water system plan approved

by the governing authority. Fire Marshal's approval including fire hydrant locations together with "engineering calculations indicating the water main extension will provide the required fire flow throughout the site."

All drafting shall be completed in AutoCAD 2013. Drafting symbols shall be per District Standards. File medium shall be sufficiently layered so that topographic data, lot lines, text and design details may be easily turned on or off.

Water main plans shall include 5-foot finished grade contours at a minimum. Crossings with sewer and storm shall be labeled with water main invert elevation and the storm/sewer crown elevation so that the vertical clearance can be easily calculated

Upon completion of construction, the electronic file shall be edited to reflect actual construction conditions and as-built records. The electronic file shall then be submitted to the District and shall become the property of the District. The electronic file shall contain all design data, including topography, lot lines, other utilities and text. Title blocks may be removed.

The as-built drawing shall be plotted on a 22" x 34" mylar and wet-stamped by the design engineer in charge of construction.

Scale: Plan view: 1" = 20' and profile view: 1" = 5'. Profile view shall be provided where the utility requires special design around conflicts. Plans shall include a north arrow, oriented up or to the left.

Standard drafting symbols shown on the attachment shall be used.

10. Materials

a. General

All materials installed within the District shall be construction of the size, type, and class called for on plans and specifications unless specific written approval by the District is given for use of alternate/altered materials.

b. Ductile Iron Pipe

Ductile iron pipe shall conform to AWWA C-151 with either the push-on joint or mechanical joint and shall be Class 52 unless otherwise specified. All pipe shall be restrained joint. Push-on joint pipe shall be restrained with Field-LOK gaskets, or District approved equal. Field-Lok gaskets are acceptable with class 52 pipe only.

The exterior shall be bituminous coated and the interior cement mortar lined in accordance with, AWWA C104, lined to a minimum thickness of 1/16 inch meeting NSF standards for potable water. Gaskets shall be retained in an annular recess to prevent their being displaced by water pressure. Gaskets shall meet the requirements of AWWA C-111 and may be either natural or synthetic rubber unless one specific type is called for

in the Special Provisions. Flanges, if called for, shall be class 125 minimum or greater if required by special design considerations.

The pipe manufacturer shall certify in writing that the inspection, and all of the specified tests, for both pipe and gaskets being supplied under this contract, have been made and that the results thereof comply with the requirements of the specifications.

Corrosive soils testing may be required at the Districts discretion and at which point test results shall be submitted to the District for review. In the event that the project is designed by the District, the developer shall be required to provide vehicular access along the pipe route a minimum of 30 days before the start of the water line construction. All costs for testing and coordination shall be considered as reimbursable expenses billed back to the developer.

If corrosive soils are present, all pipe and fittings shall be zinc coated in accordance with ISO 8179, then a bituminous finish coat and the interior cement mortar lined in accordance with AWWA C104, to a minimum thickness of 1/16-inch meeting NSF standards for potable water.

c. Fittings

All mechanical joints shall be restrained. Mechanical joints shall comply with AWWA C111. Flanges shall comply with ANSI Bl6.1, Class 125. Flange gaskets shall be full face.

Mechanical joint restrainers shall utilize the full circumference of the pipe for restraining and utilize standard MJ gasket and bolts. The mechanical joint restraint device shall have a working pressure of at least 250 psi with a minimum safety factor of 2:1. The restrainer shall be Mega-Lug or District approved equal.

Fittings shall be short-bodied, ductile iron and shall comply with AWWA C110 or AWWA C153, bituminous-coated exterior and cement mortar lined, 350-psi minimum pressure.

Adapter flanges for ductile iron pipe shall be manufactured of high strength ductile iron, ASTM A536, Grade 65-45-12. Flange dimensions shall be in accordance with ANSI B16.1, 125-pound pattern. Gasket shall be Buna-N. Setscrews shall be AISI 4140, high strength, low alloy steel. The adapter flanges shall be Uni-Flange Series 400, or equal.

Dielectric insulated unions shall be used to connect dissimilar metals. They shall separate the metals so that the passage of more than one percent of the galvanic current, which would exist with metal to metal contact, is prevented. Unions shall be of the same material as the pipe to which attached, and pressure and temperature ratings shall be no lower than that of the piping system in which it is installed.

If corrosive soils are present, fittings shall be zinc coated in accordance with ISO 8179, then bituminous finished coated on the exterior and cement mortar lined, 350-psi minimum pressure.

d. Fire Hydrants

Hydrants shall conform to the latest revision of AWWA Specification C 502 except as herein modified. Minimum of 5-1/4-inch main valve opening, 6-inch mechanical joint outlet, MEG-A-LUG, Uni-Flange, followers, furnished with 6-inch auxiliary gate valve flanged to main tee and valve box; riser to suit trench depth at each installation. Furnished with break-off flange on barrel and break-off coupling for the stem. Furnished with two 2-1/2-inch hose ports (National Standard Thread), and one 4-1/2-inch pumper connection (National Standard Thread). Each hydrant shall be equipped with a suitable positive acting drain valve and 1-1/4-inch pentagonal operating nut (counter-clockwise opening). Nozzles shall be fitted with renewable bronze nipples locked in place. The threads on all ports shall be N.S.T. Maintain 3 feet clear between hydrant and property or easement lines. Hydrants shall be Clow “Medalion”, Mueller “Super Centurion”, or M & H 129S.

e. Gate Valves

Gate valves shall be Clow, Waterous, Mueller, M & H, only. Gate valves shall be ductile iron body, bronze mounted, resilient seat, wedge disc, counterclockwise opening, high-strength bronze stem, double O-ring complying with AWWA C509 or AWWA C515. Gate valves shall be non-rising stem unless otherwise noted. Valves shall be rated at 250 psi minimum working pressure and furnished with either flanged and/or mechanical joints as required. All surfaces, interior and exterior, shall be epoxy-coated in accordance with AWWA C550, meeting NSF 61 standards for potable water.

Valve stem extensions with plate welded to operating nut will be required where operating nut is more than 4 feet below surface. The valve stem extension top shall be installed within 18 inches to 24 inches below finish grade.

"Butterfly" valves may be used with the District's approval.

f. Valve Box

Each buried valve shall be provided with an adjustable cast iron valve box of 5-1/16-inch inside diameter. Valve boxes shall have a top section with an 18-inch minimum length. The valve box shall be Olympic foundry part number 045 or District approved equal.

Valve boxes located in unpaved areas are required to have a minimum 18-inch diameter protective pad poured around the valve box. For valve boxes in paved areas, see Standard Detail 16.

g. Service Connections

Service lines shall be a Type "K" copper tubing. Splicing of the copper service line is not

allowed. Service line shall match service meter setter size. For meter sizes less that 1-inch, a 1-inch service line and setter shall be installed. Adapters for meter sizes less than 1-inch will be provided by the District at the time of meter installation. Materials for service connections shall be approved by the District and engineer and shall be as follows:

1. Corporation stops – Ford or District approved equal.

2. Meter setters – Ford or District approved equal.

3. Meter box – For 3/4x5/8-inch through 2-inch meters, see Standard Detail 13.

4. Copper pipe - Type K conforming to ASTM B-88.

5. Service Saddles – Service saddle body shall be cast from ductile iron meeting or exceeding ASTM A 536, Grade 65-45-12. Saddles shall be double strap heavy gauge Stainless Steel per ASTM A 240. Service saddles shall be Type 202S as Manufactured by Romac Industries, Inc. or District Approved Equal.

h. Paint

The following items shall be painted as shown:

Item	Type of Paint	Color	# of coats
Hydrants	Sherwin Williams B55W101 DTM-EN	Pure White	2
Air vacuum release standpipe	Sherwin Williams B55W101 DTM-EN	Pure White	2

i. Bore Specifications

Water line construction that requires installation of bore crossings shall be completed by a contractor whose main business in installing bored or augured crossings. The bore shall provide for a minimum of 2 feet of cover at the invert surface and shall extend a minimum of 2 feet of casing extended beyond the edge of asphalt. Casing shall be of sufficient wall thickness to withstand the boring process and shall not be less than 1/4-inch thickness. The casing shall be large enough to accommodate all joints and supports. Pipe within the casing shall be restrained joint pipe with treated 4 x 4's strapped to the pipe or a fabricated skid.

Casing ends shall be grout sealed upon testing of water line.

j. Back Flow Prevention

Where required or determined by the District, approved backflow prevention devices shall be installed by the contractor or property owner.

The approved back flow prevention shall be listed on the most current copy of the “Accepted Cross Connection Control Assemblies” published by the University of Southern California (USC).

The device shall be installed by an approved installer and shall have a certified test prior to connection to the District's system. The back flow prevention devices shall be tested annually by a State DOH certified tester.

Copies of the test results shall be sent to the District. Any cost for inspections or investigations required by the District as a result of the failure to comply with this requirement shall be billed to the property owner.

Flow Detection/Backflow Protection/Fire Protection Systems

1.0 Detector Double Check Valve Assemblies (DDCVA)

Detector double check valve assemblies shall conform to AWWA C506, or the latest. The detector double check valve assembly shall consist of two internally-loaded check valves, either spring-loaded or internally weighted, installed as a unit, and include a smaller, factory-installed double check valve assembly and water meter in a bypass configuration to detect leakage or water theft. The manufacturer of the detector double check valve assembly shall be listed on the most current copy of the “Accepted Cross Connection Control Assemblies” published by the University of Southern California. The end connections shall be flanged, conforming to AWWA C110.

Test cocks shall be installed and located in accordance with AWWA C506, for both mainline and bypass double check valve assemblies. The outlets to the test cocks shall be plugged.

The detector bypass meter shall be Lake Meridian Water District standard 5/8" x 3/4" remote reading water meter.

2.0 Reduced Pressure Detector Assembly (RPDA)

Reduced pressure detector assemblies shall conform to AWWA C506, or the latest. The reduced pressure detector assembly shall consist of two independently acting, spring-loaded check valves separated by a spring-loaded differential pressure relief valve, and shall include a smaller, factory-installed reduced pressure principle backflow device and water meter in a bypass configuration to detect leakage or water theft. The manufacturer of the detector reduced pressure principle backflow device shall be listed on the most current copy of the “Accepted Cross Connection Control Assemblies” published by the University of Southern California. The end connections shall be flanged, conforming to AWWA C110.

Test cocks shall be installed and located in accordance with AWWA C506 for both mainline and bypass reduced pressure principle backflow prevention devices. The outlets to the test cocks shall be plugged.

The detector bypass meter shall be Lake Meridian Water District standard 5/8" x 3/4" remote reading water meter.

3.0 Double Check Valve Assemblies (DCVA)

Double check valve assemblies shall conform to AWWA C506, or the latest, and shall consist of two internally-loaded check valves, either spring-loaded or internally-weighted, installed as a unit. The manufacturer of the double check valve assembly shall be listed on the most current copy of the “Accepted Cross Connection Control Assemblies” published by the University of Southern California. The end connections shall be flanged, conforming to AWWA C110. Any irrigation service installed after 3/01/2019, will require an approved DCVA as minimum backflow protection.

Test cocks shall be installed and located in accordance with AWWA C506, or the latest. The outlets to the test cocks shall be plugged.

4.0 Reduced Pressure Backflow Assembly (RPBA)

Reduced pressure backflow prevention assemblies shall conform to AWWA C506 and shall consist of two independently acting, spring-loaded check valves separated by a spring-loaded differential pressure relief valve. The manufacturer of the reduced pressure backflow assembly shall be listed on the most current copy of the “Accepted Cross Connection Control Assemblies” as published by the University of Southern California. The end connections shall be flanged, conforming to AWWA C110.

Test cocks shall be installed and located in accordance with AWWA C506. The outlets to the test cocks shall be plugged.

5.0 Backflow Prevention Device Shut-Off Valves

Backflow prevention device shut-off valves 3 inches through 12 inches in size shall be gate valves conforming to Section 10f of these Specifications.

The end connections on shut-off valves 3 inches and larger shall be flanged, conforming to AWWA C110. The shut-off valves shall be the outside screw and yoke (OS & Y) rising-stem type with hand wheels.

Backflow prevention device shut-off valves smaller than 3 inches shall be ball valves with bronze bodies and quarter-turn handles and tapered thread end connections.

A test cock shall be installed on the supply (inlet) side of the upstream supply shut-off valve. The outlet to the test cock shall be plugged.

11. <u>Construction</u>

All work shall be completed in accordance with the Governing Road Agency and the most current edition of the WSDOT Standards and Specifications except as here in modified.

a. Existing Utilities

The Contractor shall be responsible for locating all existing utilities, well enough in advance of the excavation to prevent damage during construction.

Work shall not commence until the contractor has requested and received utility locates from the one-call system.

b. Road Maintenance and Restoration

Construction on the project will be performed on Public roads and rights-of-way and in certain locations, on easements. Construction provisions for these conditions shall be in accordance with the applicable portions of the standard specifications.

The Contractor shall determine the requirements of the governing road agency and WSDOT, for construction utilities on county or state roads before starting construction.

The Contractor shall carefully examine the job site in order to make proper allowance for the work necessary to restore the roads to a condition equal to that which existed prior to water main construction.

The Contractor's responsibility as to road restoration shall include, but shall not be limited to, proper backfill and compaction of excavation, shaping and general restoration of the roadway, restoration of drainage facilities, removal of debris and surplus material, and restoration or protection of private improvements such as fences, mailboxes, driveways and shrubbery.

Trench backfill shall be adequately compacted and meet governing road agency requirements. The surfacing and shoulders shall be restored to a condition equal to that which existed before starting the work, all to the satisfaction of the District and governing road agency specifications.

Where original excavated material is unsuitable for trench back fill, Select Roadway Borrow shall be placed as directed by the engineer. The unsuitable material shall be removed from the site and it shall be the sole responsibility of the developer to dispose of the material.

Compaction of backfill material within the right-of-way shall be 95% maximum dry density as determined by the modified Proctor, per ASTM D1557. Compaction of backfill material within easements which are non-traveled surfaces shall be compacted to 90% maximum dry density as determined by the modified Proctor, per ASTM D1557 unless otherwise detailed on the plans. Trenches which parallel the driving surface may receive native backfill if suitable for meeting compaction requirements and approved by the governing road agency specifications. If native backfill is not suitable, the import of backfill shall meet the current edition of the WSDOT Standard Specifications section 9.03.9(3) for crushed surfacing top course.

All shoulders shall be covered with minimum 2 inches of 5/8 inch minus crushed rock.

Open-cut road crossing or trenches within the traveled roadway shall be backfilled with 100% crushed rock and mechanically compacted in lifts not to exceed 8 inches. Crushed rock shall be 1-1/4 inch minus at the bottom of the trench with 4 inches of 5/8 inch minus at the surface. Compaction of crushed rock shall be to 95% maximum dry density as determined by the modified Proctor, per ASTM D1557. Asphalt patch shall be 2 inches minimum or greater to match existing road cross-section. Asphalt shall be cut back one foot from the trench line before patching. Asphalt meet lines shall be tacked prior to placement and sealed back emulsion after placement. Crushed rock shall meet the current edition of the WSDOT Standard Specification for Base Course and Top Course. Asphalt shall meet the current edition of the WSDOT Standard Specification for class B asphalt.

Roadway crossings shall have a temporary cold mix patch and shall be maintained until the final asphalt patching is complete.

c. Water Main

The depth of trenching shall be such as to give a minimum cover of 36 inches over the top of pipe for 8-inch and smaller water mains and 48 inches over the top of pipe for 12-inch and larger water mains. Depth of cover at storm ditches shall be a minimum of 36 inches unless provided otherwise on the drawings.

d. Water Service

Service shall pass under storm sewer when required to maintain 3-foot minimum cover over top of service. There shall be not less than a six-inch cushion between the service and the storm sewer.

Service shall be located no closer than 10 feet from power vaults, handholes, and light standards. Meter boxes shall not be located in concrete driveways.

Service lines shall be bedded and backfilled with minimum 6-inches of sand over the top of the service line.

Expansion loops are to be held as flat as possible with no reverse grade. Water main service saddle and corporation stop with compression adapter shall be located at approximately 22-1/2° above spring line per the Standard Detail shown in these Specifications.

e. Connecting to Existing Water Mains

The existing water system is owned by Lake Meridian Water District.

Connections to the existing water main <u>shall not</u> be made without making the necessary arrangements with Lake Meridian Water District. Cut ins or connections to existing fittings shall require that the proposed connection be exposed.

48 hours prior to the work, fitting requirements, pipe materials and potential conflicts shall be verified. Work shall not be started until all of the materials, equipment and labor necessary

to properly complete the work, are assembled on the site along with scheduling for any disruption in water service. When work is once started on this connection, it shall proceed continuously without interruption and as rapidly as possible until completed. The District reserves the right to require special schedule considerations if the connection requires shut down of service to commercial areas or larger service areas. Shut downs and connections are typically scheduled Tuesday through Thursday.

To avoid connections between the District potable water system and unsafe or newly constructed water systems that have the potential to contaminate the District water system, and to provide optimal cleaning, disinfection and connection procedures for new water mains to ensure safe, potable drinking water for human consumption, the following procedures shall be done in the following sequence or as directed by the District General Manager or his designated representative.

1.0 Connection to an Existing Water Main

A physical separation between all untested and potentially contaminated water mains (or developer extensions) and the District's existing water system shall be maintained at all times unless the connection is protected by an approved backflow assembly device (minimum DCVA). See District Standard Detail 28. A hydrant meter and an approved backflow prevention device shall be used whenever drawing water from the District's system (see District Standard Detail 28. Hydrant meters and backflow devices may be obtained from the District office located at 27224 144th Avenue SE by completing the forms for a hydrant meter permit and making the required damage deposit. There will be a charge for all water used in accordance with District Resolution No. 588-11-14 pertaining to hydrant meters.

Prior to the new water main being installed, the Contractor has the option of cutting in the connection tee on the existing water main, or providing potable water from another source to provide a temporary water supply. If the Contractor chooses the option of installing the new connection tee, the Contractor shall install new resilient wedge gate valves on all sides of the tee, or as required by the District. A mechanical joint plug with a 2 inch minimum tap and proper blocking shall be installed on the new incoming mainline valve at the new tee, with piping accessible to accommodate filling the new water main.

The Contractor shall notify the District representative a minimum of five full working days before the valve and tee installation is scheduled. This will allow the District employees time to schedule the water main shutdown and notify the customers affected.

2.0 Cubing

Foam cubes shall be inserted into and pushed through the new water main to remove any residue, dirt, debris, obstruction, or possible foreign material in the new water main.

A. The District shall be responsible for supplying the foam cubes to the Contractor based on the water system design as shown on the approved construction plans.

B. The Contractor shall be responsible for acquiring the foam cubes at the District

office located at 27224 144th Avenue SE Kent, Washington, and shall install two foam cubes at the initial connection and two foam cubes at each lateral connection six inches in diameter and larger (downstream of each connecting valve), as the new main is installed. This would include all 6-inch diameter lateral runs to hydrants that are longer than two full pipe lengths, or have more than a single joint in them.

C. A mechanical joint cap with a 2-inch minimum tap shall be installed with proper blocking at the initial connection point on the new main with piping accessible to accommodate both flushing and chlorine injection see Standard Detail 28.

D. The District shall retrieve the foam cubes when the Contractor performs the cubing process. All cubing and flushing shall be under the supervision of the District representative.

E. To accommodate the launch and the retrieval of the cubes, the minimum blow-off size shall be 4-inch diameter for 4-inch and 6-inch mains. A 6-inch diameter blow-off shall be installed for 8-inch mains. An 8-inch diameter blow-off shall be installed for 10-inch and 12-inch mains. A 12-inch diameter blow-off shall be installed for 16-inch mains per District Standards.

F. It shall be the Contractor's responsibility to properly dechlorinate and dispose of all flush water per District Standards as well as locating and retrieving any "lost" or missing cubes or partial cubes from the water main.

G. In the event that the initial cubing does not adequately clean the new water mains, the Contractor shall be required to provide additional point(s) for launching and retrieval of additional cubes, and re-cube those sections of main that have debris in them until clean, as determined by the District.

3.0 Pressure and Leakage Test

All new water mains, extensions of existing mains, water system appurtenances and water services shall then be pressure tested for leakage in accordance with Section 7-9.3(23) of the WSDOT Standard Specifications. All water services and appurtenances installed prior to water main testing shall also be pressure tested with the water main. At no time will the temporary water system connection or backflow device remain connected or in place during the pressure test procedures.

4.0 Chlorine Injection

After the Contractor has cleaned the water main by cubing and flushing, the District will inject a liquid chlorine solution evenly throughout the new main and appurtenances for optimal disinfection. The chlorine dosage shall be at a minimum of 50 mg/L and a maximum of 100 mg/l. The Contractor must provide Lake Meridian Water District three working days prior advance notice to perform the chlorine injection. The Contractor must sign a waiver holding the District harmless for any failure of purity samples due to the work performed by the District. Work may be scheduled after hours due to manpower or workload constraints, in which case the Contractor will reimburse the District for any employee overtime associated with the work performed.

The Chlorine shall remain in the main for the time specified according to the

procedure used from AWWA Standards C651-99. After the 24-hour disinfection period, the remaining residual throughout the water main and appurtenances shall not be lower than 25 mg/L. The Contractor shall be responsible for dechlorinating and disposing of all flush water.

The following table lists the amount of Chlorine needed to produce 50 mg/L in 18 feet of pipe (one pipe length) for 12.5% Sodium Hypochlorite solution.

Main Diameter	12.5% (Gal)
4"	0.005
6"	0.011
8"	0.019
10"	0.031
12"	0.044
16"	0.078
18"	0.098
24"	0.176

5.0 Bacteriological Purity Samples

Two consecutive sets of acceptable purity samples, taken at least 24 hours apart, shall be collected by the District from all representative points of the new main and appurtenances. District staff will determine appropriate sample points.

District personnel shall take the first bacteriological purity sample(s) a minimum of 24 hours after the chlorine is removed, flushing is completed and the chlorine level is no greater than nor less than the level present in the adjacent distribution system. Water services and other appurtenances installed prior to water main testing shall also be purity tested with the water main. The second set of purity samples shall be taken no less than 24 hours after the first set of samples. A representative background sample of the District water system may be taken from the distribution source at the same time purity samples are taken from the new main.

Note: No water shall be flushed during the incubation periods described above or prior to the purity samples being taken.

It is the District's responsibility to make arrangements to transport the sample(s) to a state-certified laboratory. The Contractor shall be responsible for paying all costs for the purity samples excluding the representative background sample at the distribution source.

Note: Two consecutive samples, a minimum of 24 hours apart, must show no coliform presence before performing final connections to the existing water system. The District representative will receive all laboratory results.

The District staff may be available during normal working hours, depending upon workload, (8:00 am to 4:30 pm) excluding holidays and weekends, to take purity samples, assist with cubing and chlorine injections. The Contractor shall reimburse the District for all associated costs, including labor, vehicles, materials, and overhead charges. Outside of normal working hours, the Contractor shall reimburse the District at the most current hourly overtime rate for labor, vehicles, materials and other associated costs.

6.0 Final Connection(s) to the Existing Water Main

When both sets of purity sample results are satisfactory and received in writing from the state-certified laboratory, and all other District water system standards have been met, the Contractor shall be allowed to connect the new mains to the existing distribution system following District and AWWA standards. It shall be the Contractors responsibility to prevent, at all times, the contamination of the new and existing water mains with trench water, dirt, debris, or other foreign material.

The District representative must be present to witness the final connection(s) to the existing water system, to turn on and flush the new water system, and to place the new water system and appurtenances into service.

f. Fire Hydrants and Gate Valves

The valves and hydrants shall be set vertically with the valve boxes properly centered and adjusted to fit the finished grade. Where it may be necessary to set a hydrant in cut, the area should be graded and leveled with at least a 3-foot radius around the hydrant. The slopes or fills shall be neatly graded.

g. Water Supply

Water supply for filling, testing and flushing of new mains will be available from the existing system.

Before any flushing is started, the District shall be contacted to determine if sufficient water is available at the particular time. Flushing overnight shall not be permitted.

The District shall require a hydrant meter when water is used for washing streets, driveways, sidewalks, and equipment, etc. A deposit shall be required on said hydrant meter. A minimum service charge and a consumption charge per 100 cubic feet of water used will be billed per District resolution number 588-11-14 pertaining to hydrant meters.

h. Construction Schedule

The Contractor shall submit his construction schedule to the District for approval prior to construction of the project.

i. Concrete Blocking

Blocking and bracing of the pipe and fittings shall be placed so as to secure bearing on the undisturbed earth. The blocking and bracing size shall be approved by the District. Blocking and bracing shall be of sufficient proportions and installed so as to withstand the required test pressure and operating conditions. The District reserves the right to require the contractor to retain a qualified soils engineer to determine adequate blocking size.

Concrete shall be placed in back of all fittings with unbalanced thrust. Pre-cast blocking may be used only if prior approval by the District. Blocking/shackling shall not be covered without authorization from the District inspector. Blocking shall be formed so that bolts, joints, gaskets, and flanges of adjacent joints are clear of the concrete and so that bolts and joints

can be dismantled without removing the concrete.

At tees and crosses where future mains connect, a precast concrete brick may be used between fittings and thrust block.

j. Pipe Bedding

When native material at the trench bottom is suitable for pipe bedding, the bottom shall be hand-finished to grade so that the pipe will have uniform support along the barrel and bell. After the pipe is in place, additional hand-selected native material shall be placed and tamped in place around the pipe up to the horizontal diameter of the pipe.

When native material at the trench bottom is stony or otherwise non-uniform, the trench shall be over-excavated from 3 to 6 inched below the specified grade. The Contractor shall then furnish and place a layer of 5/8-inch minus pipe bedding material to the specified grade. After the pipe is in place additional 5/8-inch minus bedding material shall be placed and tamped in place around the pipe up to the horizontal diameter of the pipe.

Pipe bedding material shall meet the current edition of the WSDOT Standard Specifications.

Where the trench bottom is in a material which is unsuitable for foundation or material which will make it difficult to obtain uniform bearing for the pipe, such material shall be removed and a stable foundation provided. Foundation material shall be in accordance with, Class B, of the current edition of the WSDOT Standard Specifications for Class B foundation material.

The portion of the backfill from the horizontal diameter of the pipe to a point one foot above the top of the pipe shall be made with finely-divided earth free from stones larger than 2 inches in diameter. The material shall be carried up evenly on both side of the pipe simultaneously in approximately 6-inch layers and each layer thoroughly compacted with appropriate tools in such manner as to avoid injuring or disturbing the completed pipeline.

k. Water Works Testing

District staff will verify that all air has been purged from all water mains and services prior to pressure testing. The Contractor will then pump up water mains to 150 psi over normal working pressure as determined by accurate pressure gauge on pump. Minimum pressure 250 psi. Let sit 30 minutes. There shall not be an appreciable or abrupt loss in pressure in the 30 minutes. Reduce pressure to 50 psi. Pump up main to "required" pressure and test for 10 more minutes. (Contractor testing gauge may be compared to District pressure gauge for accuracy.)

Prior to calling out the District staff to witness the pressure test, the contractor shall have all equipment set up and completely ready for testing.

l. Disinfection

The pipe and appurtenances shall be disinfected in accordance with Washington State

Health Department Standards and Standard Specifications.

Samples will be taken and handled by District personnel only.

12. Final Inspection and Acceptance

The District shall develop a final punch list and will issue to contractor. The contractor shall then schedule a final inspection after all items of the punch list are corrected and/or completed. The District will then perform a final inspection to confirm that the punch list has been satisfactorily completed. Final acceptance of the improvements or meters will not be installed until all items of the punch list are resolved to the satisfaction of the District.

LAKE MERIDIAN WATER DISTRICT

Attachments

LAKE MERIDIAN WATER DISTRICT

WATER STANDARD DETAILS INDEX

DWG NO.	DETAIL TITLE (APPROVAL DATE)
01	GENERAL NOTES
02	CONCRETE BLOCKING
02A	CONCRETE BLOCKING DETAIL MINIMUM BEARING AREA
03	FIRE HYDRANT DETAIL VERTICAL OR ROLLED CURB
04	FIRE HYDRANT DETAIL GRAVEL SHOULDER
05	WATER MAIN DEPTH REQUIREMENTS
06	TYPICAL ROAD SECTION
07	METER BOX LOCATION
08	1" WATER SERVICE TAP DETAIL FOR 1" METERS
09	1" WATER SERVICE FOR 1" METER SETTER DETAIL
10A	1" RESIDENTIAL WATER SERVICE W/ CLOSED FIRE SPRINKLER SYSTEM
10B	1" RESIDENTIAL WATER SERVICE W/ CLOSED FIRE SPRINKLER SYSTEM
11	1-1/2" AND 2" METER SETTER DETAIL
12	WATER SERVICE TAP DETAIL FOR 1-1/2" AND 2" METERS
13	BOXES AND LIDS SPECIFICATIONS
14	BLOWOFF ASSEMBLY DETAIL
15	AC WATER MAIN REPLACEMENT AT UTILITY CROSSING
16	VALVE BOX DETAIL
17A	4"-10" DOUBLE CHECK BACKFLOW PREVENTION ASSEMBLY
17B	4"-10" DOUBLE CHECK VALVE BACKFLOW PREVENTION ASSEMBLY
18A	DOUBLE DETECTOR CHECK AND VAULT ASSEMBLY (4" OR GREATER)
18B	DETECTOR DOUBLE CHECK & VAULT ASSEMBLY LIST AND NOTES
18C	DETECTOR DOUBLE CHECK & VAULT ASSEMBLY LIST AND NOTES
19A	3", 4", & 6" METERS
19B	3", 4", & 6" METERS MATERIAL LIST AND GENERAL NOTES
20	REDUCED PRESSURE BACKFLOW ASSEMBLY 1" TO 2"
21A	REDUCED PRESSURE BACKFLOW ASSEMBLY 3" AND LARGER
21B	REDUCED PRESSURE BACKFLOW ASSEMBLY 3" AND LARGER
22	PRESSURE REDUCING VALVE
23	2" COMBINATION AIR/VACUUM ASSEMBLY DETAILS
24	APPROVAL STAMP
25	VICINITY MAP
26	STANDARD PLAN LEGEND SYMBOLS
27	STANDARD PLAN LEGEND LINETYPES AND TEXT
28A	SEPARATION FROM EXISTING WATER MAIN
28B	SEPARATION FROM EXISTING WATER MAIN NOTES AND DETAILS
29	SAMPLING STATION DETAIL
30	EXISTING SERVICE LINE ABANDONMENT
31	DOUBLE CHECK VALVE ASSEMBLY (2" AND SMALLER)

GENERAL NOTES: REVISED JUNE 2021

1. PROJECT TO BE CONSTRUCTED IN ACCORDANCE WITH LAKE MERIDIAN WATER DISTRICT STANDARD SPECIFICATIONS AND DETAILS, CURRENT EDITION AVAILABLE AT LAKEMERIDIANWATER.COM
2. PIPE DEFLECTION AT JOINTS NOT TO EXCEED 1/2 MANUFACTURER'S RECOMMENDATIONS.
3. ALL WATER PIPE, VALVES, AND FITTINGS SHALL BE RESTRAINED JOINT.
4. MAINTAIN A MINIMUM OF 10 FEET HORIZONTAL SEPARATION BETWEEN WATER MAIN AND SANITARY SEWER AT ALL LOCATIONS, EXCEPT AS ALLOWED PER SECTION C1-9.1 OF THE CRITERIA FOR SEWAGE WORKS DESIGN AS PUBLISHED BY THE DEPARTMENT OF ECOLOGY IN AUGUST 2008.
5. NOTIFY THE DISTRICT OFFICE IN WRITING A MINIMUM OF 72 HOURS PRIOR TO PROCEEDING WITH CONSTRUCTION.
6. WATER WORKS TESTING

   DISTRICT STAFF WILL VERIFY THAT ALL AIR HAS BEEN PURGED FROM ALL WATER MAINS AND SERVICES PRIOR TO PRESSURE TESTING..THE CONTRACTOR WILL THEN PUMP UP MAIN TO 150 P.S.I. OVER NORMAL WORKING PRESSURE AS DETERMINED BY ACCURATE PRESSURE GAUGE ON PUMP. MINIMUM PRESSURE SHALL BE 250 P.S.I. LET SIT 30 MINUTES. THERE SHALL NOT BE AN APPRECIABLE OR ABRUPT LOSS IN PRESSURE IN THE 30 MINUTES. REDUCE PRESSURE TO 50 P.S.I. PUMP UP MAIN TO "REQUIRED" PRESSURE AND TEST FOR TEN (10) MORE MINUTES. (CONTRACTOR TESTING GAUGE MAY BE COMPARED TO DISTRICT PRESSURE GAUGE FOR ACCURACY)
7. PRIOR TO CALLING OUT THE DISTRICT TO WITNESS THE PRESSURE TEST, THE CONTRACTOR SHALL HAVE ALL EQUIPMENT SET UP AND COMPLETELY READY FOR TESTING.
8. THE CONTRACTOR SHALL NOT OPERATE ANY GATE VALVES OR MAKE ANY CONNECTIONS TO THE EXISTING WATER SYSTEM WITHOUT PRIOR WRITTEN APPROVAL FROM THE DISTRICT INSPECTOR OR SUPERINTENDENT.
9. WATER SERVICE LOCATIONS ARE SHOWN AT APPROXIMATE LOCATION ONLY. ALL FINAL LOCATIONS SHALL BE FIELD STAKED BY THE DEVELOPER'S ENGINEER AND THEN COORDINATED AND FIELD VERIFIED WITH THE DISTRICT INSPECTOR OR SUPERINTENDENT PRIOR TO INSTALLATION. ALL TAPS TO THE WATERMAIN SHALL BE MADE AT THE SAME HORIZONTAL STATION ALONG THE PIPE THAT THE METER IS PLACED UNLESS OTHER ARRANGEMENTS ARE MADE WITH THE DISTRICT.

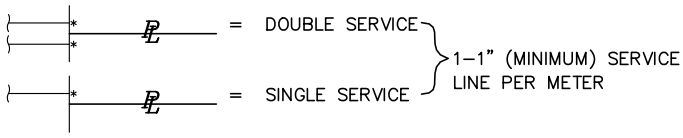

   DOUBLE SERVICES SHALL NOT BE LOCATED WHERE THERE WILL BE CONFLICTS WITH OTHER UTILITY BOXES. ANY CHANGES TO THE DESIGN LOCATIONS SHALL BE APPROVED BY DISTRICT MANAGER OR SUPERINTENDENT PRIOR TO INSTALLATION.

10. AFTER CLEARING AND A MINIMUM OF 4 WEEKS PRIOR TO WATERLINE INSTALLATION, THE DEVELOPER OR CONTRACTOR SHALL COORDINATE WITH THE DISTRICT SO THAT SOILS TESTING CAN BE COMPLETED BY THE CONTRACTOR, IF DETERMINED NECESSARY BY THE DISTRICT.
11. THE CONTRACTOR SHALL CUBE THE NEW WATER MAIN PRIOR TO FLUSHING AND TESTING THE NEW WATER MAIN. A REPRESENTATIVE OF THE DISTRICT SHALL BE PRESENT TO WITNESS THE CUBING PROCESS. THE DISTRICT SHALL FURNISH FOAM CUBES AND THE CONTRACTOR SHALL COORDINATE WITH THE DISTRICT AND RESIDENT PROJECT REPRESENTATIVE FOR CUBING LOCATIONS. IF A CUBE GETS STUCK INSIDE WATER MAIN, THE CONTRACTOR SHALL LOCATE AND REMOVE CUBE AND ANY OBSTRUCTIONS. THE CUBING PROCESS SHALL THEN BE REPEATED UNTIL THE ENTIRE LINE HAS BEEN SUCCESSFULLY CUBED. THE CONTRACTOR SHALL THEN SUCCESSFULLY FLUSH AND TEST THE NEW WATER MAIN FOR PRESSURE AND PURITY. THE PROCESS SHALL BE REPEATED UNTIL THE NEW WATER MAIN HAS BEEN SUCCESSFULLY CUBED, FLUSHED AND TESTED. THE DISTRICT SHALL BE RESPONSIBLE FOR COLLECTING PURITY SAMPLES AND OBTAINING BACTERIOLOGICAL TEST RESULTS. HOWEVER, THE CONTRACTOR IS RESPONSIBLE FOR SATISFACTORY SAMPLES. THE DISTRICT WILL PAY FOR THE FIRST SET OF SAMPLES <u>BUT ANY REPEAT SAMPLING DUE TO FAILURE WILL BE THE RESPONSIBILITY OF THE CONTRACTOR.</u>
12. EXISTING WATER SERVICES, IF PRESENT, SHALL BE ABANDONED PER STANDARD DETAIL 30.
13. EXISTING DRINKING WATER WELLS, IF PRESENT, SHALL BE DECOMMISSIONED IN ACCORDANCE WITH WAC 173-160-381.
14. EXISTING SEPTIC TANKS, IF PRESENT, SHALL BE DECOMMISSIONED IN ACCORDANCE WITH ALL STATE AND LOCAL STANDARDS.

Lake Meridian
WATER DISTRICT

GENERAL NOTES

APPROVED:

DISTRICT — DATE 6/15/21

REVISION DATE: **MAY 2021**	DRAWN: **MTM**	CHECKED: **BRL**	SCALE: **NTS**

Gray & Osborne, Inc.
CONSULTING ENGINEERS

01

L:\Lake Meridian WD\District Documents and Standards\Standard Details\Water Details_2021\01.dwg, 6/17/2021 10:08 AM, MADISON MCCROSKY

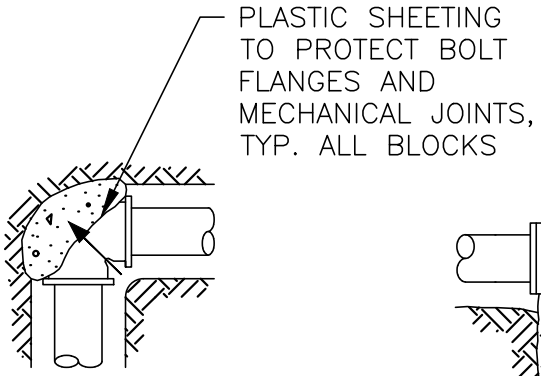

HORIZONTAL BENDS

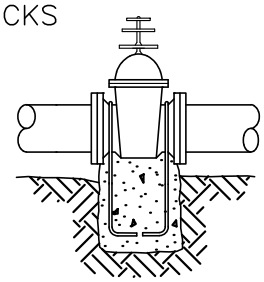

VALVE ANCHOR

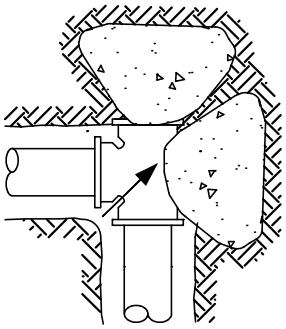

PLUGGED TEE

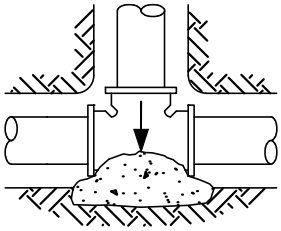

TEE

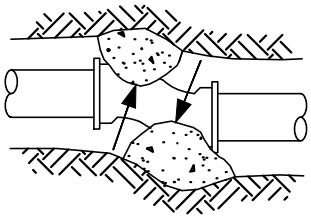

OFFSET

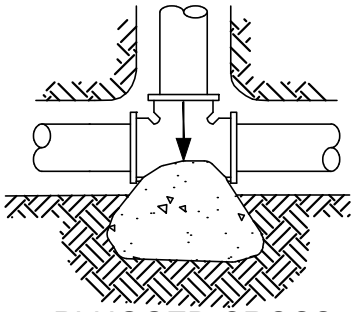

PLUGGED CROSS

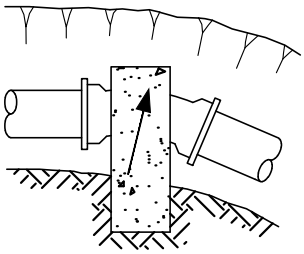

VERTICAL BEND

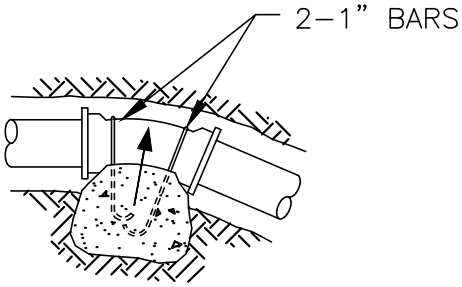

ALTERNATE
VERTICAL BEND

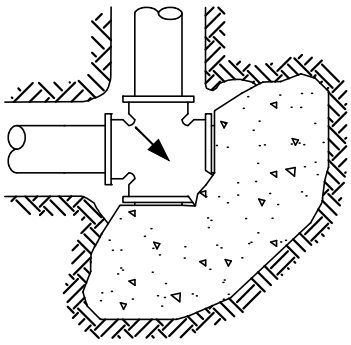

PLUGGED CROSS

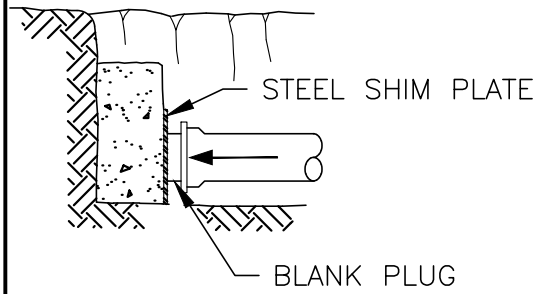

PLUGGED END FOR
FUTURE EXPANSION

SEE SHEET 02A FOR MINIMUM BEARING AREA
AND NOTES.

Lake Meridian
WATER DISTRICT

CONCRETE BLOCKING

APPROVED:

DISTRICT

6/15/21
DATE

REVISION DATE: **MAY 2021** | DRAWN: **MTM** | CHECKED: **BRL** | SCALE: **NTS**

Gray & Osborne, Inc.
CONSULTING ENGINEERS

02

L:\Lake Meridian WD\District Documents and Standards\Standard Details\Water Details_2021\02.dwg, 6/17/2021 10:08 AM, MADISON MCCROSKY

MINIMUM BEARING AREA TABLE					
FITTING Ø	**TEE**	**90°**	**45°**	**22 1/2°**	**11 1/4°**
6"	4 SF	6 SF	3 SF	2 SF	2 SF
8"	7 SF	10 SF	6 SF	3 SF	2 SF
10"	10 SF	15 SF	9 SF	5 SF	3 SF
12"	14 SF	22 SF	12 SF	6 SF	4 SF
16"	25 SF	38 SF	21 SF	11 SF	7 SF

NOTES:

1. BEARING AREA TABLE BASED ON 250 PSI PRESSURE AND 2000 PSF SOIL BEARING. IF PRESSURE IS GREATER OR SOIL BEARING IS LESS, THE THRUST BLOCK SIZE SHALL BE INCREASED.

2. ALL CONCRETE FOR BLOCKING SHALL BE FIVE (5) SACK MIX OR ECOLOGY BLOCKS, WHERE APPROVED BY THE DISTRICT.

3. ALL BLOCKING SHALL BE POURED AGAINST FIRM, UNDISTURBED EARTH.

4. FIELD ELEVATION CHANGES IN WATER MAIN AND BLOCKING SHALL BE APPROVED BY THE DISTRICT.

Lake Meridian
WATER DISTRICT

CONCRETE BLOCKING DETAIL
MINIMUM BEARING AREA

APPROVED:
DISTRICT
DATE 6/15/21

REVISION DATE: **MAY 2021** | DRAWN: **MTM** | CHECKED: **BRL** | SCALE: **NTS**

Gray & Osborne, Inc.
CONSULTING ENGINEERS

02A

L:\Lake Meridian WD\District Documents and Standards\Standard Details\Water Details_2021\02.dwg, 6/17/2021 10:08 AM, MADISON MCCROSKY

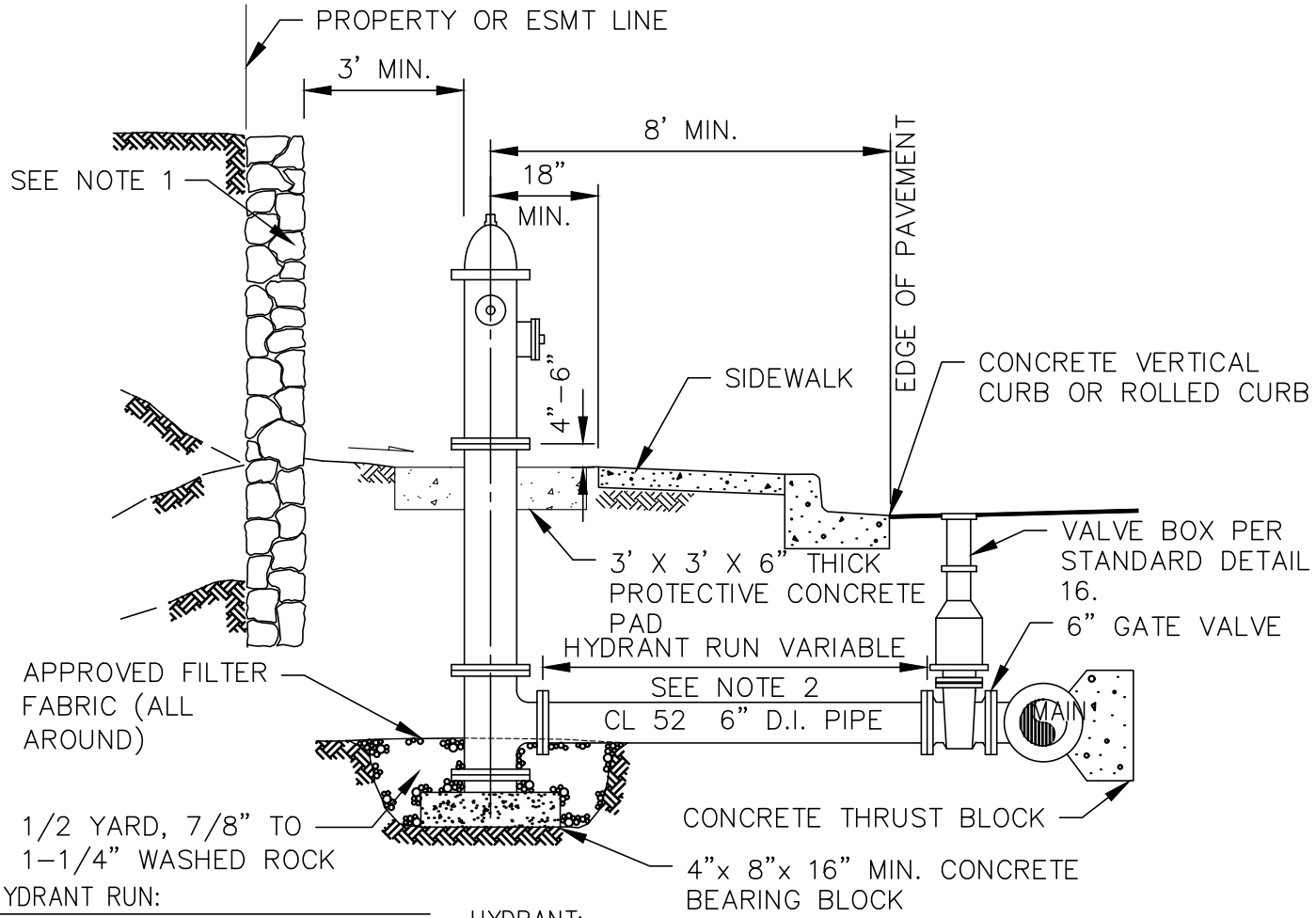

HYDRANT RUN:

1. LENGTH ESTABLISHED ON JOB, APPROVED BY ENGINEER.
   A. USE 6" DI PIPE, FLANGED, (SHORT RUNS ONLY),
   B. OR 6" DI PIPE, MJ WITH MEG-A-LUG OR DISTRICT APPROVED EQUAL.
2. HYDRANT RUN SHALL NOT BE MORE THAN 50' WITH RESTRAINED JOINTS.

NOTE:

1. ROCKERY OR LANDSCAPE BLOCK TYPE RETAINING WALL TO BE PROVIDED WHERE NECESSARY IN CUT OR FILL AREAS.
2. NO GUARD POSTS.
3. HYDRANTS SHALL BE PROVIDED WITH STORZ ADAPTER PER LOCAL FIRE JURISDICTION.

HYDRANT:

1. SHALL BE STD. 5-1/4" MVO W/ TWO 2-1/2" PORTS AND ONE 4-1/2" STEAMER PORT. ALL THREADS ON PORTS SHALL BE N.S.T.. OPERATING NUT AND PORT CAP OPERATING NUT SHALL BE 1-1/4'.
2. SHALL BE BRUSHED WITH TWO COATS OF SHERWIN WILLIAMS B55W101 DTM-EN PURE WHITE.
3. AREA GROUND SURFACE TO BE GRADED UNIFORMLY AROUND HYDRANT (3' RADIUS) WITH 3'X3' PROTECTIVE CONCRETE PAD.
4. SHALL BE CLOW "MEDALLION", M&H "129S", MUELLER "SUPER CENTURION" ONLY & SHALL CONFORM TO AWWA C-502 EXCEPT AS HEREIN MODIFIED.
5. INSTALL STIMSONITE MODEL 88-A/BLUE REFLECTIVE PAVEMENT MARKER, OR EQUAL, ON HYDRANT SIDE OF THE CENTER LINE OF THE ADJACENT STREET IN DIRECT LINE WITH THE HYDRANT.
6. HYDRANTS SHALL BE PLACED AT A MINIMUM 8' FROM CENTERLINE OF HYDRANT TO DRIVING SURFACE.

Lake Meridian WATER DISTRICT

FIRE HYDRANT DETAIL
VERTICAL OR ROLLED CURB

APPROVED:
DISTRICT — DATE 6/15/21

REVISION DATE: MAY 2021	DRAWN: MTM	CHECKED: BRL	SCALE: NTS

Gray & Osborne, Inc. CONSULTING ENGINEERS

03

L:\Lake Meridian WD\District Documents and Standards\Standard Details\Water Details_2021\03.dwg, 6/17/2021 10:08 AM, MADISON MCCROSKY

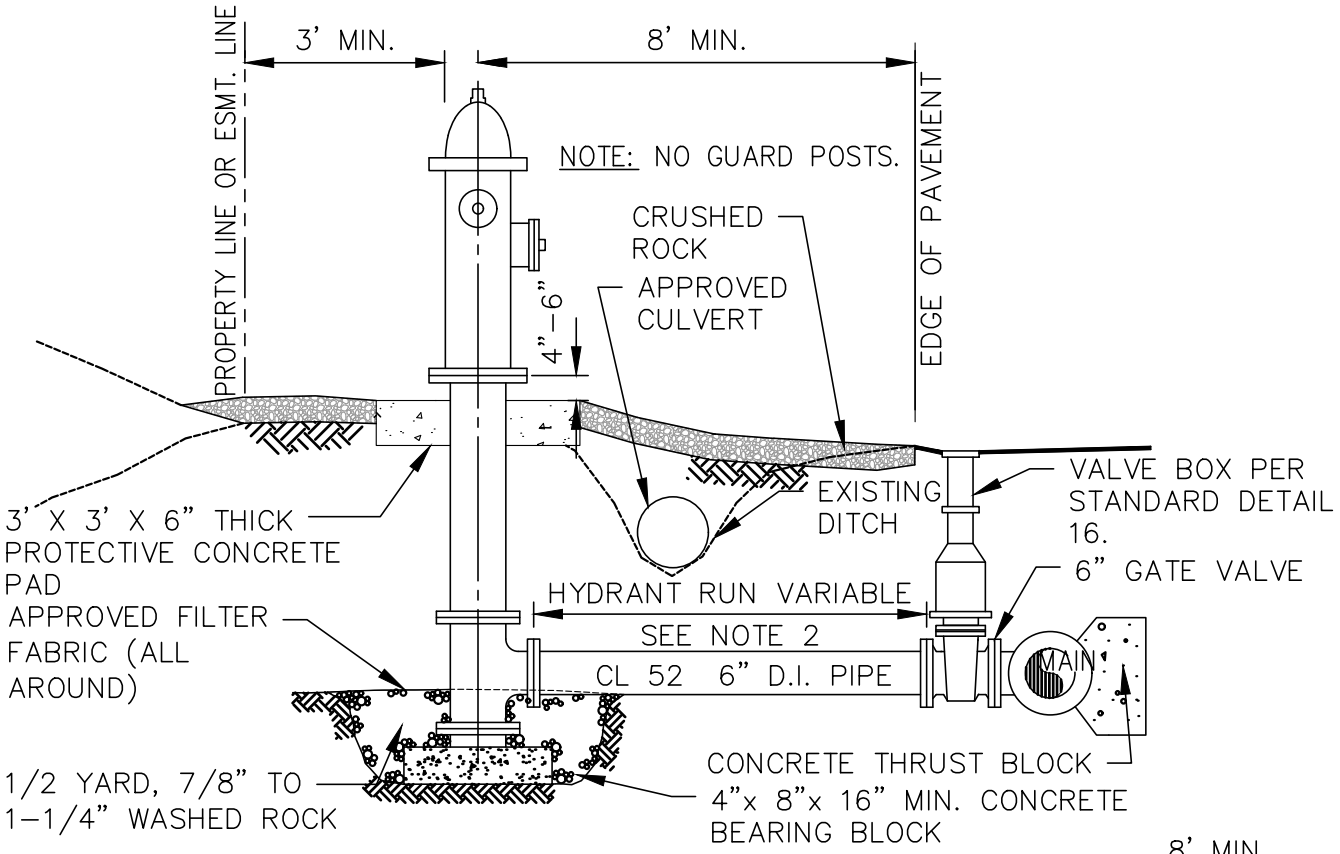

ELEVATION VIEW

HYDRANT RUN:

1. LENGTH ESTABLISHED ON JOB, APPROVED BY ENGINEER.
   A. USE 6" DI PIPE, FLANGED, (SHORT RUNS ONLY),
   B. OR 6" DI PIPE, MJ WITH MEG-A-LUG OR APPROVED EQUAL.
2. HYDRANT RUN SHALL BE NO MORE THAN 50' WITH RESTRAINED JOINTS.

HYDRANT:

1. SHALL BE STD. 5-1/4" MVO W/ TWO 2-1/2" PORTS AND ONE 4-1/2" STEAMER PORT. ALL THREADS ON PORTS SHALL BE N.S.T.. OPERATING NUT AND PORT CAP OPERATING NUT SHALL BE 1-1/4'.
2. SHALL BE BRUSHED WITH TWO COATS OF SHERWIN WILLIAMS B55W101 DTM-EN PURE WHITE.
3. AREA GROUND SURFACE TO BE GRADED UNIFORMLY AROUND HYDRANT (3' RADIUS) WITH 3'X3' PROTECTIVE CONCRETE PAD.
4. SHALL BE CLOW "MEDALLION", M&H "129S", MUELLER "SUPER CENTURION" ONLY & SHALL CONFORM TO AWWA C-502 EXCEPT AS HEREIN MODIFIED.
5. INSTALL STIMSONITE MODEL 88-A/BLUE REFLECTIVE PAVEMENT MARKER, OR EQUAL, ON HYDRANT SIDE OF THE CENTER LINE OF THE ADJACENT STREET IN DIRECT LINE WITH THE HYDRANT.
6. HYDRANTS SHALL BE PLACED AT A MINIMUM 8' FROM CENTERLINE OF HYDRANT TO DRIVING SURFACE.

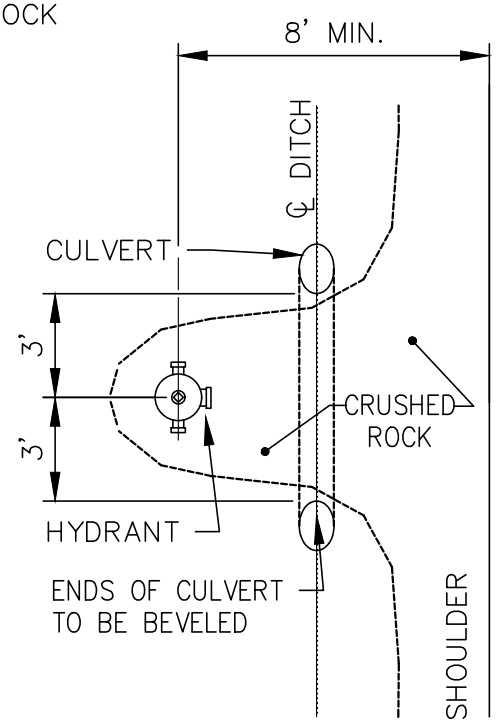

PLAN VIEW

Lake Meridian WATER DISTRICT

FIRE HYDRANT DETAIL
GRAVEL SHOULDER

APPROVED:
DISTRICT — DATE 6/15/21

REVISION DATE: **MAY 2021** | DRAWN: **MTM** | CHECKED: **BRL** | SCALE: **NTS**

Gray & Osborne, Inc.
CONSULTING ENGINEERS

04

L:\Lake Meridian WD\District Documents and Standards\Standard Details\Water Details_2021\04.dwg, 6/17/2021 10:09 AM, MADISON MCCROSKY

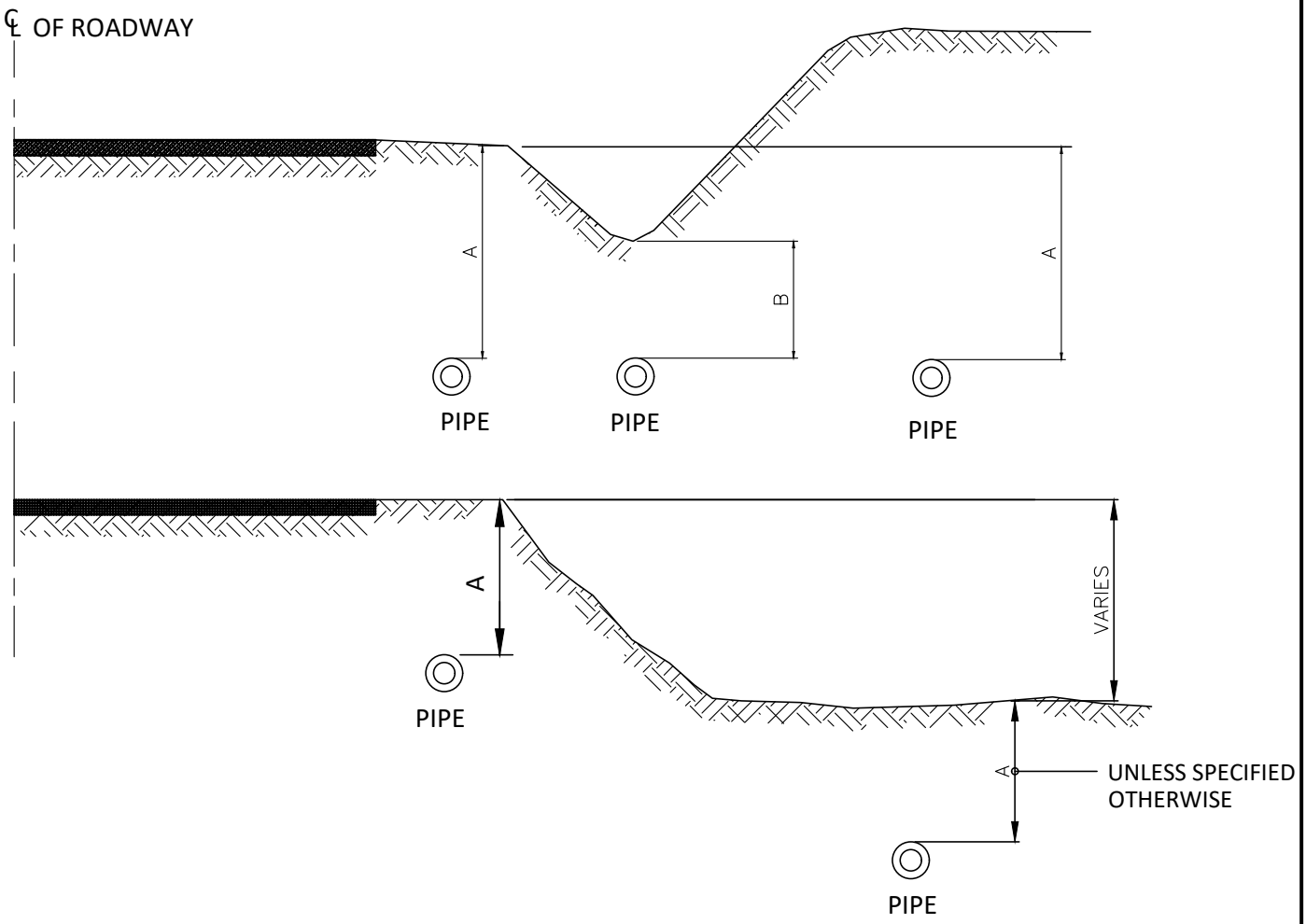

PIPE SIZE	A	B
4"-8"	36"	36"
10"	48"	36"

NOTE:

ALL "TRANSMISSION MAINS" SHALL HAVE 48" COVER

Lake Meridian
WATER DISTRICT

WATER MAIN DEPTH REQUIREMENTS

APPROVED:

DISTRICT

6/15/21
DATE

REVISION DATE: **MAY 2021** | DRAWN: **MTM** | CHECKED: **BRL** | SCALE: **NTS**

Gray & Osborne, Inc.
CONSULTING ENGINEERS

05

L:\Lake Meridian WD\District Documents and Standards\Standard Details\Water Details_2021\05.dwg, 6/17/2021 10:09 AM, MADISON MCCROSKY

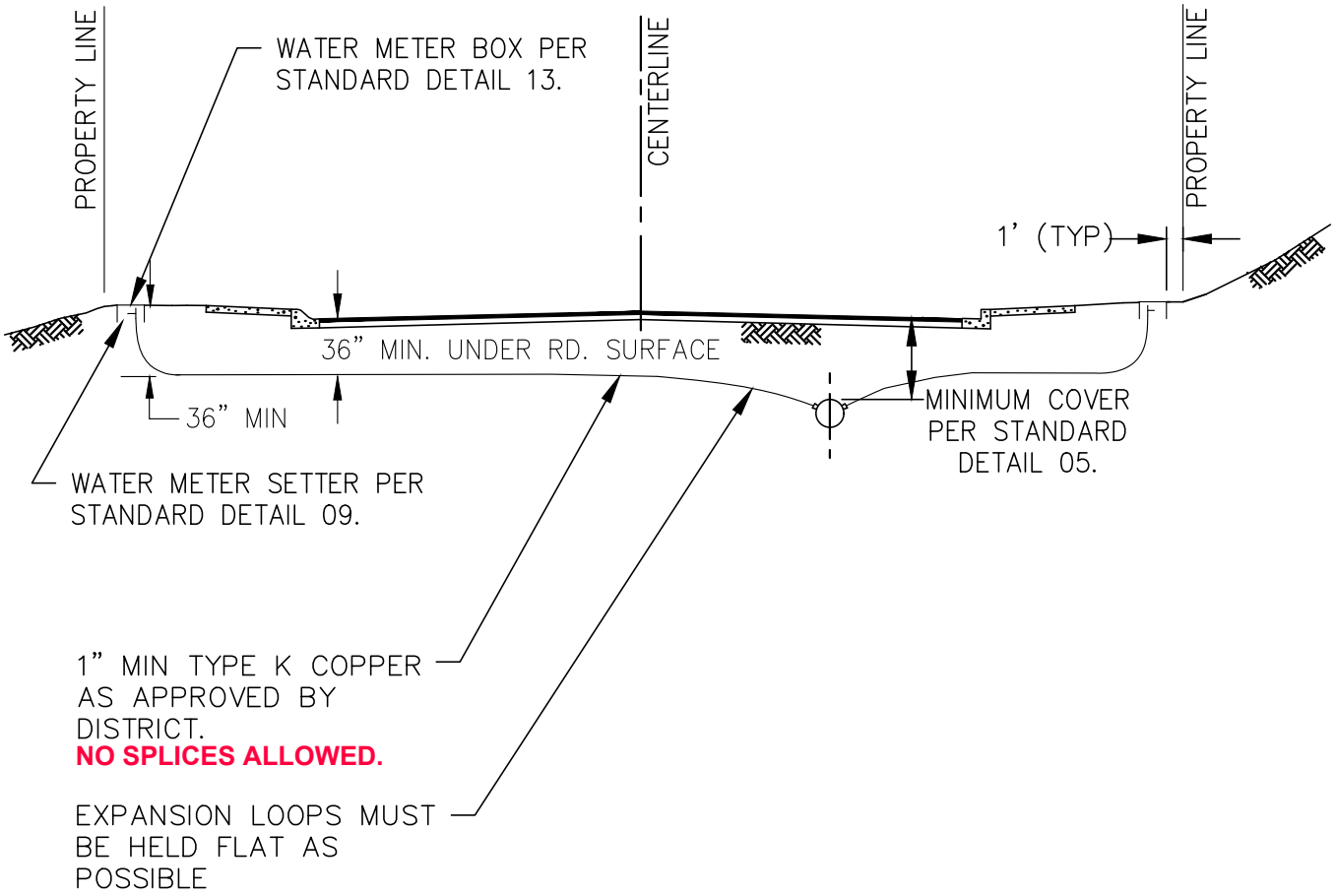

Lake Meridian
WATER DISTRICT

TYPICAL ROAD SECTION

APPROVED:

DISTRICT

6/15/21
DATE

REVISION DATE: **MAY 2021** | DRAWN: **MTM** | CHECKED: **BRL** | SCALE: **NTS**

Gray & Osborne, Inc.
CONSULTING ENGINEERS

06

L:\Lake Meridian WD\District Documents and Standards\Standard Details\Water Details_2021\06.dwg, 6/17/2021 10:09 AM, MADISON MCCROSKY

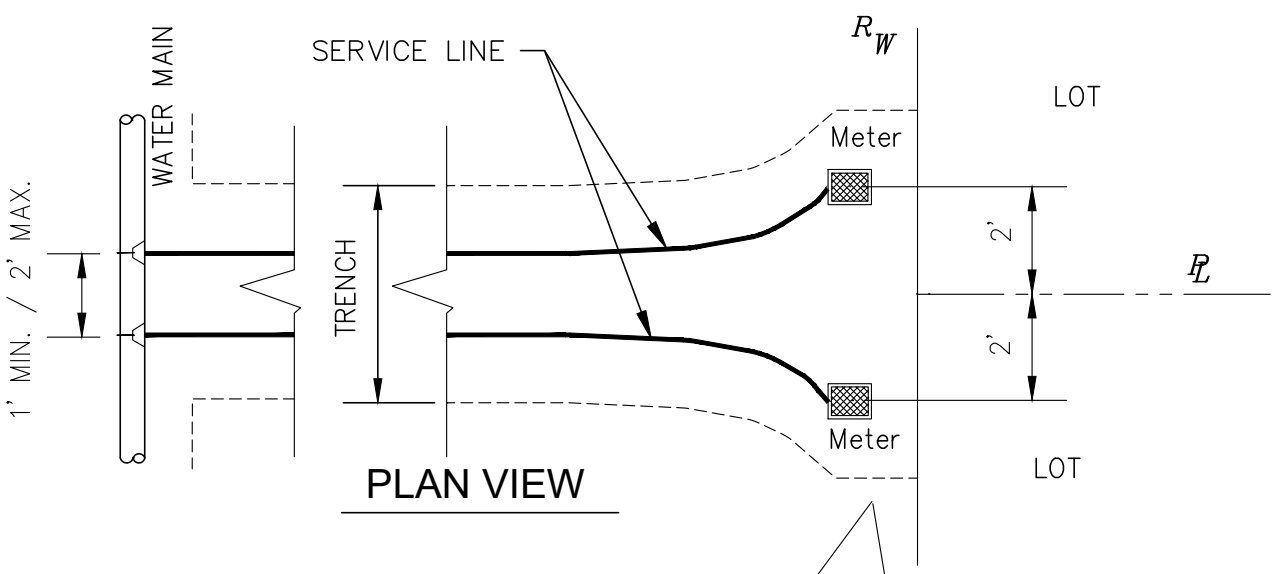

PLAN VIEW

HORIZONTAL LOCATION

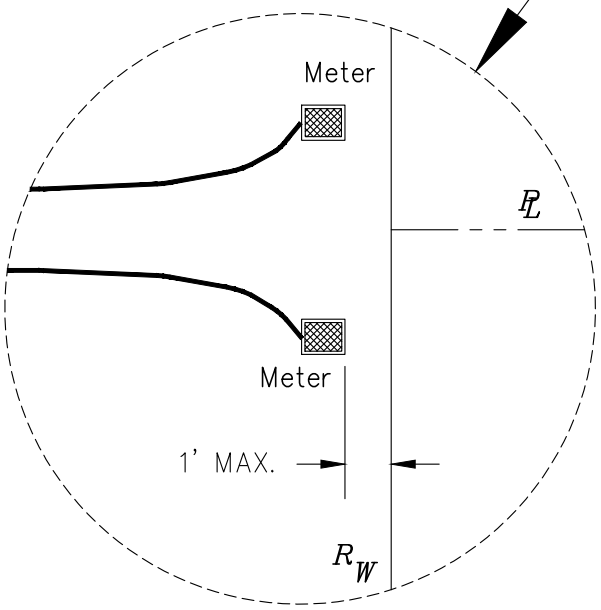

WITHOUT SIDEWALK

OR

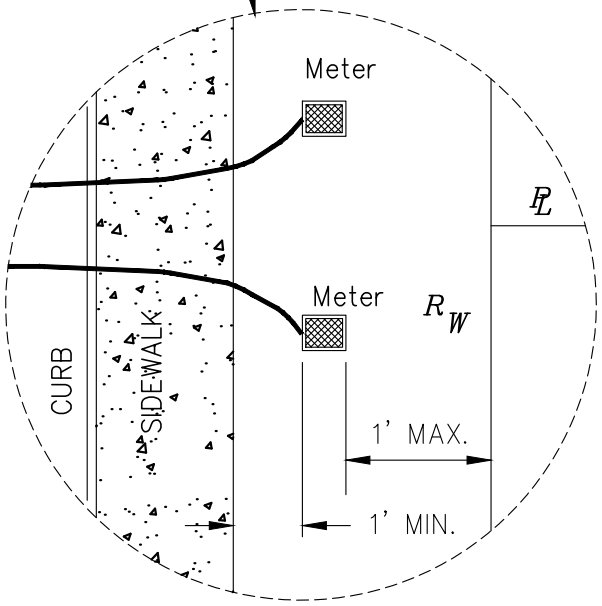

WITH SIDEWALK

Lake Meridian WATER DISTRICT

METER BOX LOCATION

APPROVED:

DISTRICT

6/15/21

DATE

REVISION DATE: **MAY 2021** | DRAWN: **MTM** | CHECKED: **BRL** | SCALE: **NTS**

Gray & Osborne, Inc.
CONSULTING ENGINEERS

07

L:\Lake Meridian WD\District Documents and Standards\Standard Details\Water Details_2021\07.dwg, 6/17/2021 10:10 AM, MADISON MCCROSKY

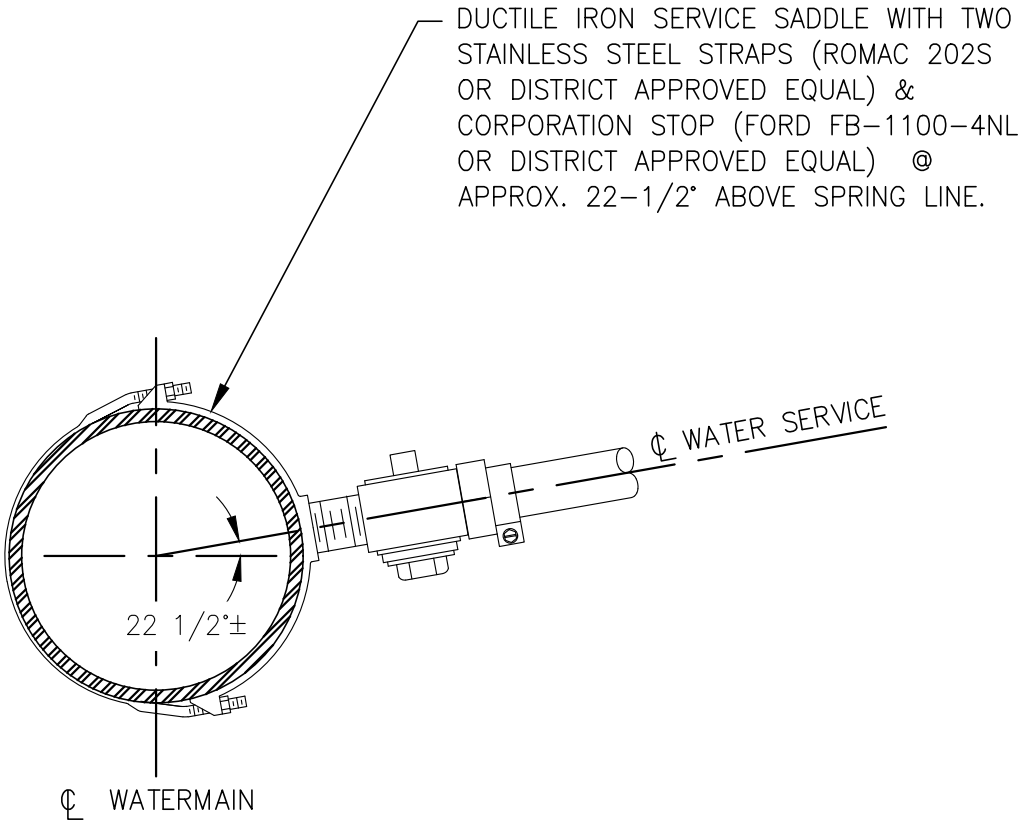

Lake Meridian
WATER DISTRICT

1" WATER SERVICE TAP DETAIL FOR 1" SERVCE METERS

APPROVED:

DISTRICT

6/15/21
DATE

REVISION DATE: MAY 2021	DRAWN: MTM	CHECKED: BRL	SCALE: NTS

Gray & Osborne, Inc.
CONSULTING ENGINEERS

08

L:\Lake Meridian WD\District Documents and Standards\Standard Details\Water Details_2021\08.dwg, 6/17/2021 10:10 AM, MADISON MCCROSKY

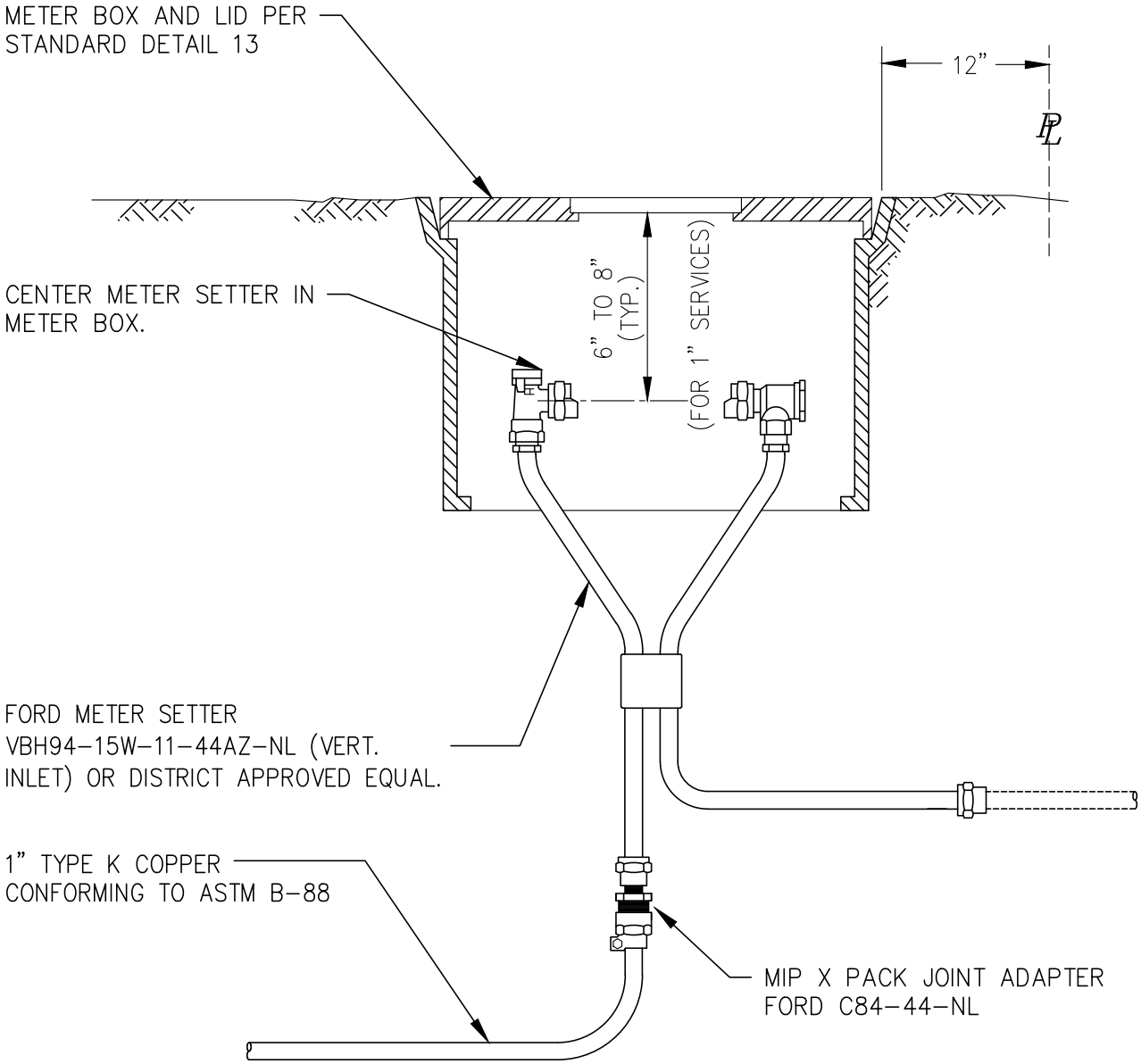

NOTES:

1. DO NOT BACKFILL UNTIL ALL BRASS FITTINGS HAVE BEEN INSPECTED BY THE DISTRICT.
2. SHALL BE USED ONLY FOR A SINGLE SERVICES ONLY.
3. 1" METER SETTER TO BE USED ⅝" X ¾" METERS W/ ADAPTERS. DISTRICT TO PROVIDE AND ADAPTERS AT THE TIME OF METER INSTALLATION.

Lake Meridian WATER DISTRICT

1" WATER SERVICE FOR 1" METER SETTER DETAIL

APPROVED:

DISTRICT — DATE 6/15/21

REVISION DATE: MAY 2021	DRAWN: MTM	CHECKED: BRL	SCALE: NTS

Gray & Osborne, Inc. CONSULTING ENGINEERS

09

L:\Lake Meridian WD\District Documents and Standards\Standard Details\Water Details_2021\09.dwg, 6/17/2021 10:10 AM, MADISON MCCROSKY

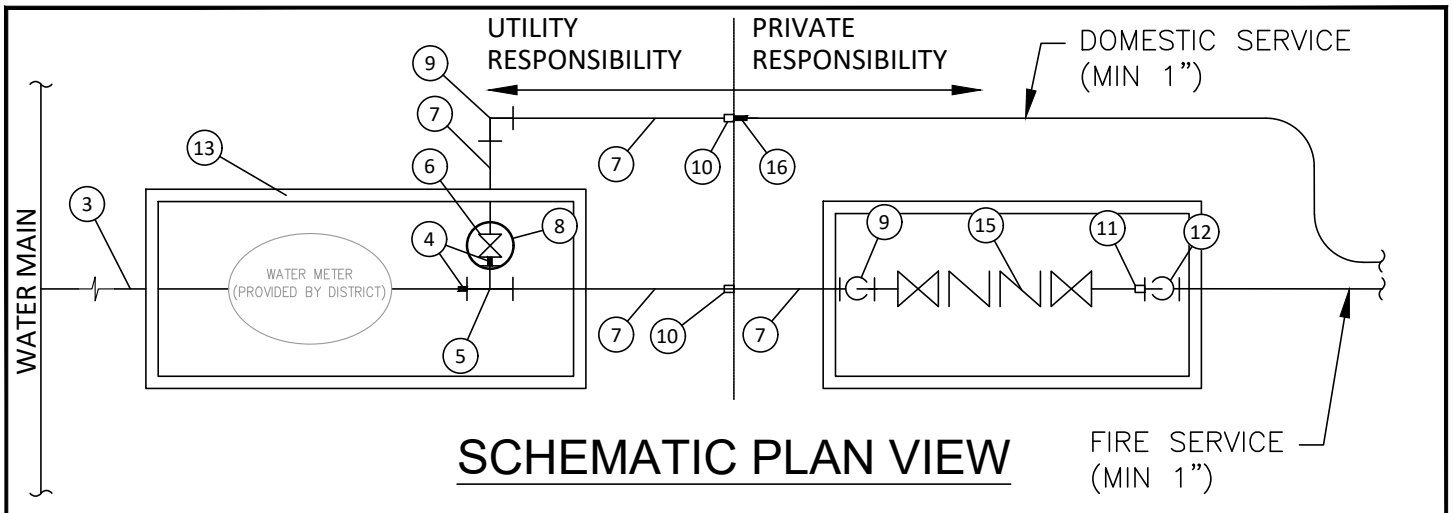

SCHEMATIC PLAN VIEW

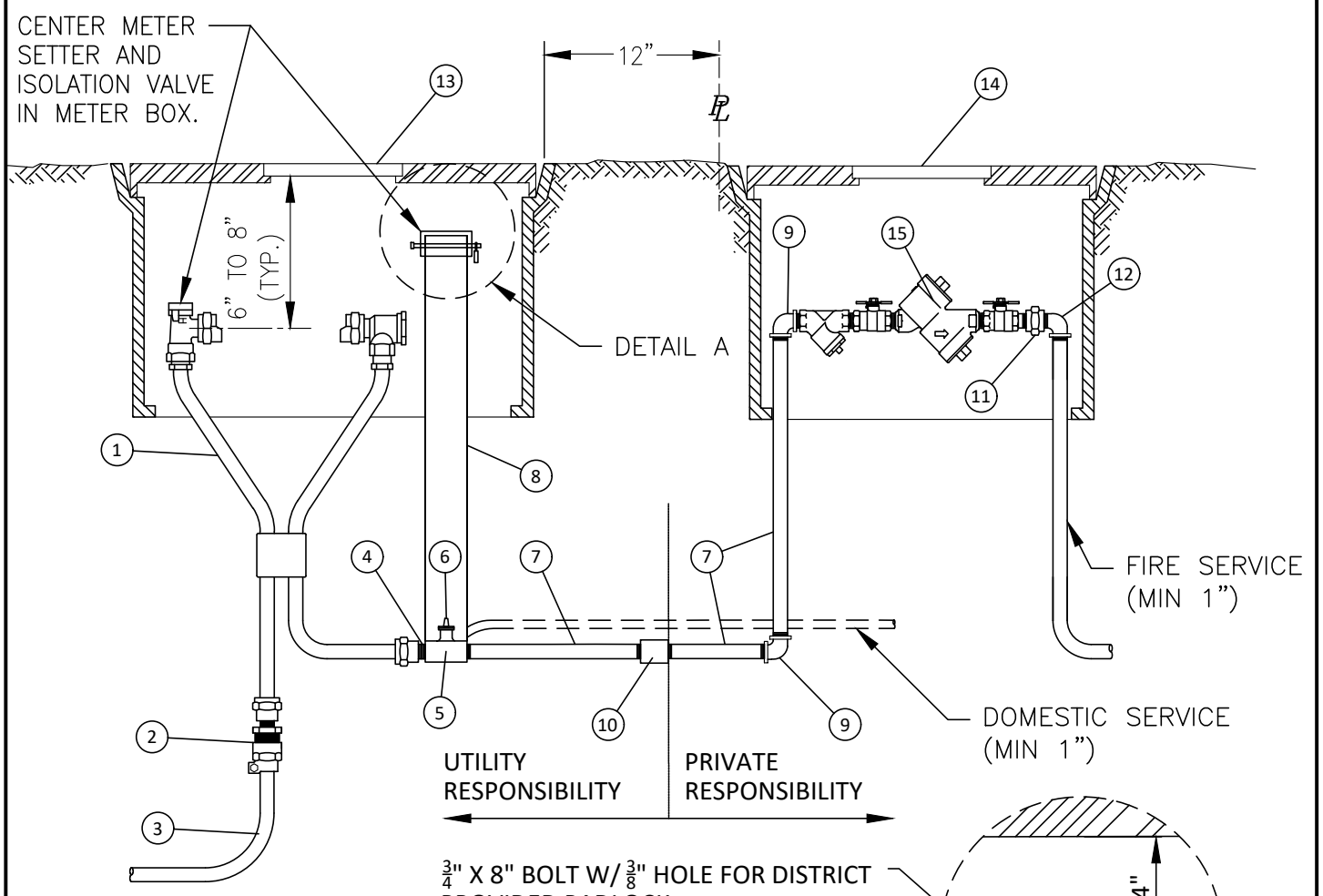

$\frac{3}{4}$" X 8" BOLT W/ $\frac{3}{8}$" HOLE FOR DISTRICT PROVIDED PADLOCK

4" SCHED. 40 PVC SLIP CAP

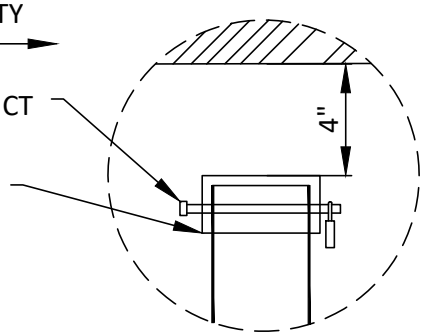

DETAIL A

SEE SHEET 10B FOR NOTES AND MATERIAL LIST

Lake Meridian WATER DISTRICT

1" RESIDENTIAL WATER SERVICE W/ CLOSED FIRE SPRINKLER SYSTEM

APPROVED:

DISTRICT — DATE 6/15/21

REVISION DATE: MAY 2021	DRAWN: MTM	CHECKED: BRL	SCALE: NTS

Gray & Osborne, Inc. CONSULTING ENGINEERS

10A

L:\Lake Meridian WD\District Documents and Standards\Standard Details\Water Details_2021\10.dwg, 6/17/2021 10:11 AM, MADISON MCCROSKY

GENERAL NOTES:

1. DO NOT BACKFILL UNTIL ALL BRASS FITTINGS HAVE BEEN INSPECTED BY THE DISTRICT.
2. DOUBLE CHECK DETECTOR ASSEMBLY MUST BE LISTED IN THE MOST CURRENT COPY OF THE "ACCEPTED CROSS CONNECTION CONTROL ASSEMBLIES" PUBLISHED BY THE UNIVERSITY OF SOUTHERN CALIFORNIA. TYPE SHALL BE APPROVED BY THE DISTRICT.
3. SEPARATE FIRE AND DOMESTIC WATER LINES.
4. DISTRICT RESERVES THE RIGHT IN THE FUTURE TO COLLECT A MONTHLY FIRE PROTECTION CHARGE.
5. ALL BRASS FITTINGS SHALL BE LEAD FREE.

MATERIAL LIST

1. FORD METER SETTER VBH94-15W-11-44Z-NL (VERT. INLET/NO OUTLET EXTENSION) OR DISTRICT APPROVED EQUAL.
2. MIP X PACK JOINT ADAPTER FORD C84-44-NL
3. 1" TYPE K COPPER CONFORMING TO ASTM B-88
4. 1" LEAD FREE BRASS CLOSE NIPPLE
5. 1" LEAD FREE BRASS TEE
6. 1" FORD B11-444-NL BALL VALVE (1" FEMALE IRON PIPE THREADS BOTH ENDS BALL VALVE)
7. 1" LEAD FREE BRASS NIPPLE LENGTH AS REQUIRED
8. 4" SCHED. 40 PVC PIPE LENGTH AS REQUIRED
9. 1" LEAD FREE BRASS 90° ELBOW
10. 1" LEAD FREE BRASS COUPLING
11. 1" LEAD FREE BRASS UNION
12. 1" LEAD FREE BRASS STREET EL
13. OLD CASTLE/CARSON HW 1730BCF W/ 12" BODY. DUCTILE IRON FLUSH COVER W/ MAX VIEW READER DOOR.
14. OLD CASTLE/CARSON HW 1527BCF W/ 12" BODY. DUCTILE IRON FLUSH COVER W/ MAX VIEW READER DOOR.
15. 1" DOUBLE CHECK VALVE ASSEMBLY. SEE NOTE 2.
16. 1" MIP X PACK JOINT ADAPTER

SHEET 2 OF 2

Lake Meridian WATER DISTRICT

1" RESIDENTIAL WATER SERVICE W/ CLOSED FIRE SPRINKLER SYSTEM

APPROVED:

DISTRICT — DATE 6/15/21

REVISION DATE: MAY 2021	DRAWN: MTM	CHECKED: BRL	SCALE: NTS

Gray & Osborne, Inc. CONSULTING ENGINEERS

10B

L:\Lake Meridian WD\District Documents and Standards\Standard Details\Water Details_2021\10.dwg, 6/17/2021 10:11 AM, MADISON MCCROSKY

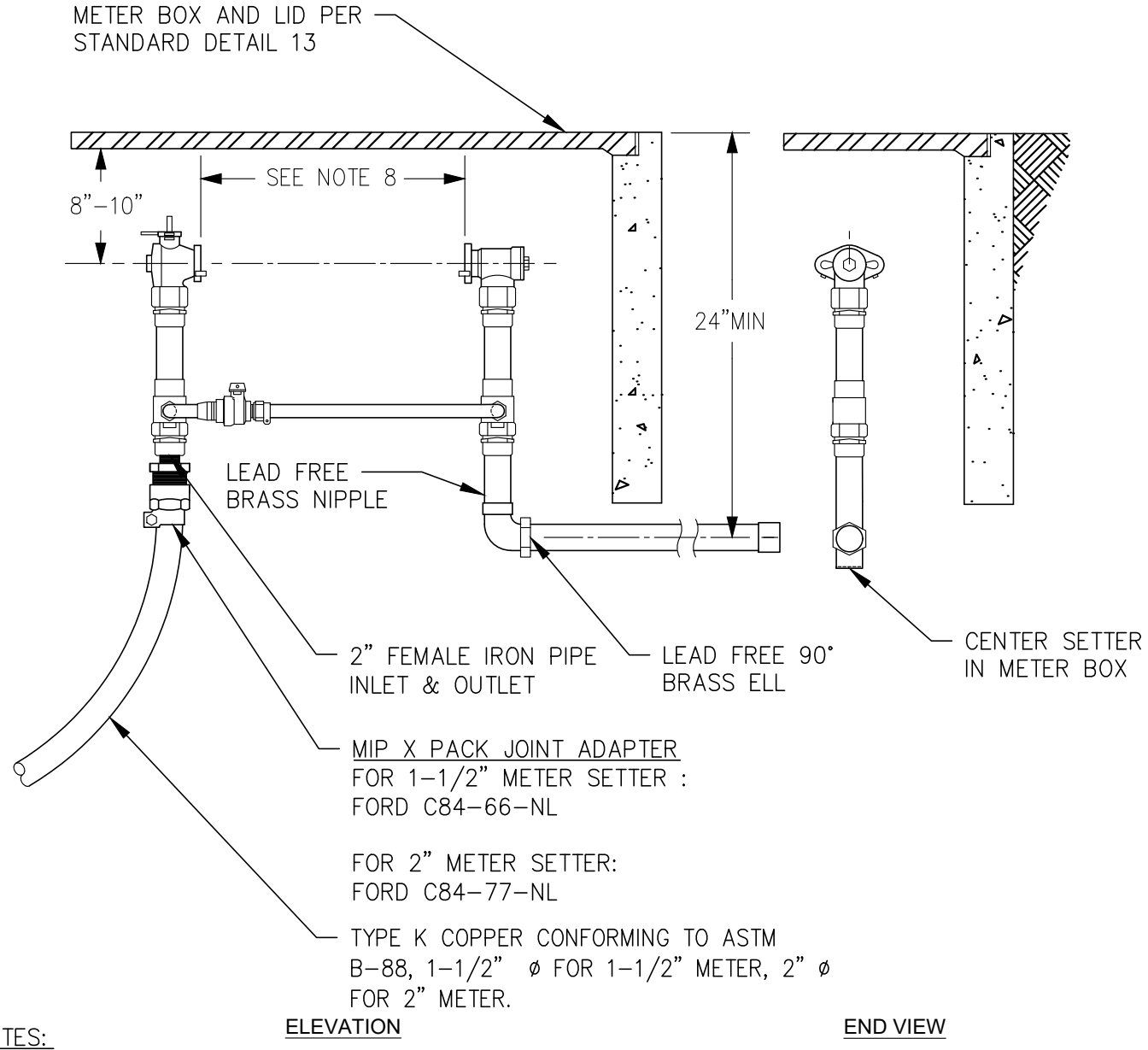

ELEVATION

END VIEW

NOTES:

1. FORD METER SETTER:
   1–1/2": VBH86–12B–11–66–NL
   2": VBH87–12B–11–77

2. METERS TO BE SUPPLIED AND SET BY THE DISTRICT.

3. METER SETTER TO BE APPROVED BY THE DISTRICT PRIOR TO BACKFILL.

5. METER BOX: SEE STANDARD DETAIL 13 FOR METER BOX AND LID.

7. ONE INCH METERS W/ ADAPTORS TO 1–1/2 INCH MAY BE ALLOWED IF APPROVED BY DISTRICT.

8. 1–1/2" METER = 13"
   2" METER = 17"

Lake Meridian WATER DISTRICT

1-1/2" AND 2" METER SETTER DETAIL

APPROVED:

DISTRICT — DATE 6/15/21

REVISION DATE: **MAY 2021** | DRAWN: **MTM** | CHECKED: **BRL** | SCALE: **NTS**

Gray & Osborne, Inc. CONSULTING ENGINEERS

L:\Lake Meridian WD\District Documents and Standards\Standard Details\Water Details_2021\11.dwg, 6/17/2021 10:11 AM, MADISON MCCROSKY

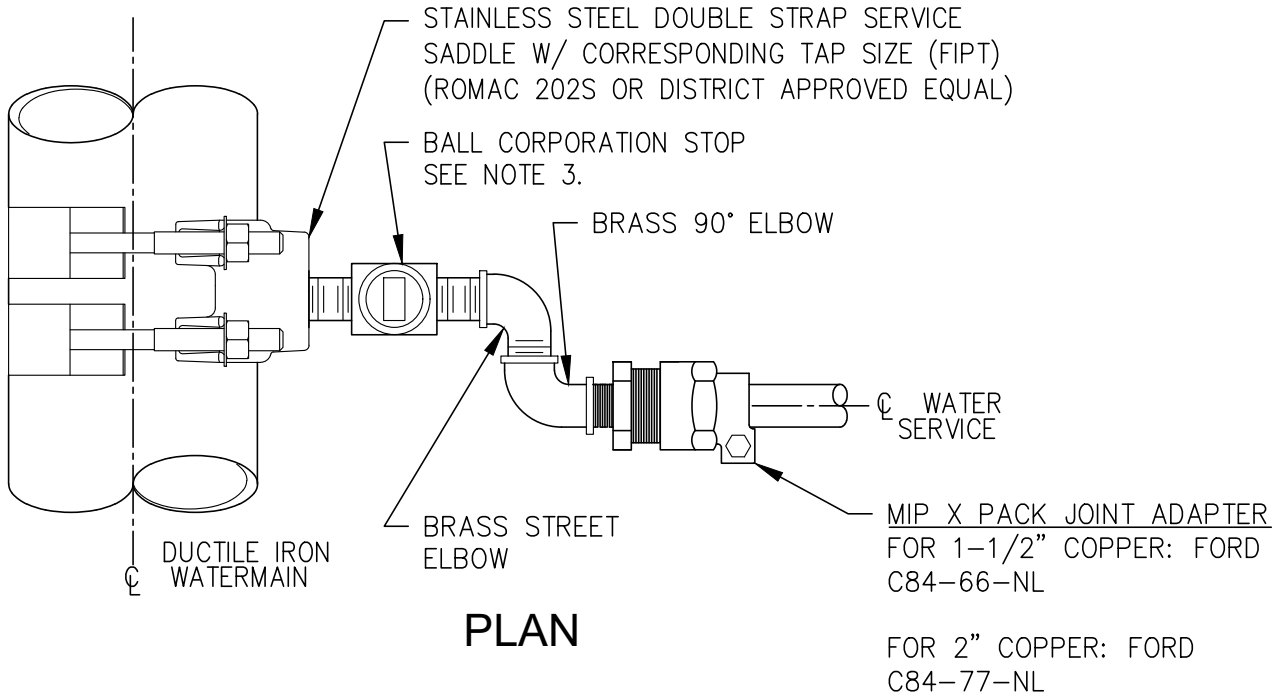

PLAN

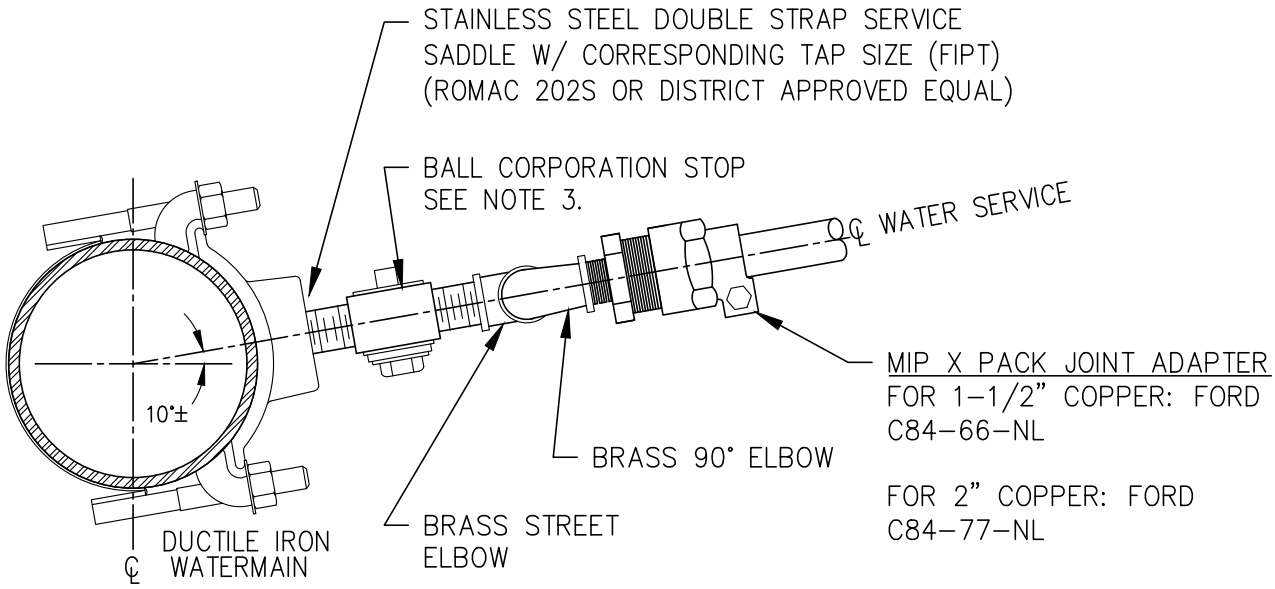

ELEVATION

NOTES:

1. SERVICE LINE FITTINGS: ALL FITTINGS SHALL BE BRASS LEAD FREE CONFORMING TO C800-89.
2. MUNICIPAL SERVICE PIPE: TYPE K COPPER CONFORMING TO ASTM B-88
3. CORPORATION STOP:
   FOR 1-1/2": FORD FB500-6-NL
   FOR 2": FORD FB500-7-NL

Lake Meridian WATER DISTRICT

WATER SERVICE TAP DETAIL FOR 1-1/2" AND 2" METERS

APPROVED:

DISTRICT — DATE 6/15/21

REVISION DATE: MAY 2021	DRAWN: MTM	CHECKED: BRL	SCALE: NTS

Gray & Osborne, Inc. CONSULTING ENGINEERS

L:\Lake Meridian WD\District Documents and Standards\Standard Details\Water Details_2021\12.dwg, 6/17/2021 10:11 AM, MADISON MCCROSKY

SERVICE TYPE AND LOCATION	BOX TYPE	LID TYPE
1" WATER SERVICE METER LIGHT TRAFFIC & LANDSCAPED AREAS	OLD CASTLE/CARSON HW 1527BCF W/ 12" BODY	DUCTILE IRON FLUSH COVER WITH MAX VIEW READER DOOR
1" WATER SERVICE METER HEAVY TRAFFIC AREAS	OLYMPIC FOUNDRY SM30 PRODUCT NUMBER 12-4125 SET (H-20 RATED DUCTILE IRON BOX AND LID).	
1-1/2" & 2" WATER SERVICE METER UNIMPROVED AREAS	OLD CASTLE/CARSON HW 1730BCF W/ 12" BODY	DUCTILE IRON FLUSH COVER WITH MAX VIEW READER DOOR
1-1/2" & 2" WATER SERVICE METER HIGH TRAFFIC AREAS	OLYMPIC FOUNDRY SM30 PRODUCT NUMBER 12-4125 SET (H-20 RATED DUCTILE IRON BOX AND LID).	

Lake Meridian
WATER DISTRICT

BOXES AND LIDS SPECIFICATIONS

APPROVED:

DISTRICT

DATE 6/15/21

REVISION DATE: **MAY 2021** | DRAWN: **MTM** | CHECKED: **BRL** | SCALE: **NTS**

Gray & Osborne, Inc.
CONSULTING ENGINEERS

L:\Lake Meridian WD\District Documents and Standards\Standard Details\Water Details_2021\13.dwg, 6/17/2021 10:12 AM, MADISON MCCROSKY

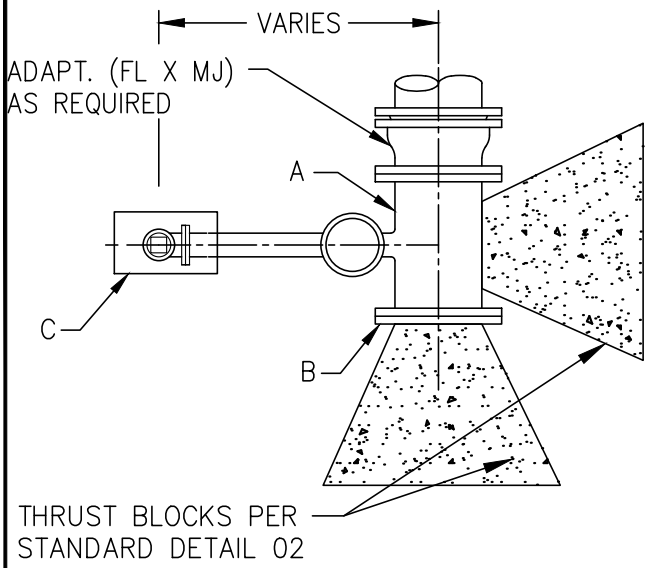

PLAN

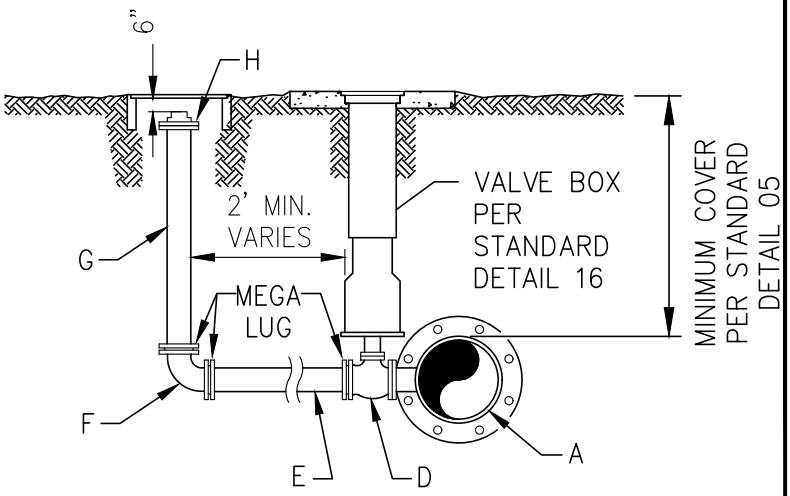

ELEVATION

PART NO.	PART DESCRIPTION	BLOWOFF SIZE 4"	6"	8"	12"
A	DI TEE (FLxFL) BRANCH SIZE*	4"	6"	8"	8"
B	BLIND FLANGE W/ FULL FACE GASKET*	4"	6"	8"	8"
C	METER BOX	NOTE 3	NOTE 3	NOTE 4	NOTE 4
D	R.S. GV W/ 2" OPERATING NUT	4"	6"	8"	8"
E	CL52 DIP	4"	6"	8"	8"
F	DI 90° BEND (MJxMJ), RESTRAINED	4"	6"	8"	8"
G	CL52 DIP (PExFL)	4"	6"	8"	8"
H	BLIND FLANGE W/ 4" TAP 4" PLASTIC PLUG	4"	6"	8"	8"

* TEE SIZE SAME AS WATER MAIN UNLESS OTHERWISE INDICATED.

MAIN SIZE	BLOWOFF SIZE
4"	4"
6"	4"
8"	6"
10"	8"
12"	8"
16"	12"

NOTES:

1. LOCATE BLOW-OFF AS CLOSE AS POSSIBLE TO WATER MAIN OR AS INDICATED BY DISTRICT
2. GROUND WITHIN 3' RADIUS OF BLOW-OFF SHALL BE GRADED UNIFORMLY
3. OLYMPIC FOUNDRY SM29 PRODUCT NUMBER 12-4105N SET (H-20 RATED DUCTILE IRON BOX AND LID)
4. OLYMPIC FOUNDRY SM30 PRODUCT NUMBER 12-4125 SET (H-20 RATED DUCTILE IRON BOX AND LID)

Lake Meridian
WATER DISTRICT

BLOWOFF ASSEMBLY DETAIL

APPROVED:
DISTRICT
6/15/21
DATE

REVISION DATE: MAY 2021 | DRAWN: MTM | CHECKED: BRL | SCALE: NTS

Gray & Osborne, Inc.
CONSULTING ENGINEERS

L:\Lake Meridian WD\District Documents and Standards\Standard Details\Water Details_2021\14.dwg, 6/17/2021 10:12 AM, MADISON MCCROSKY

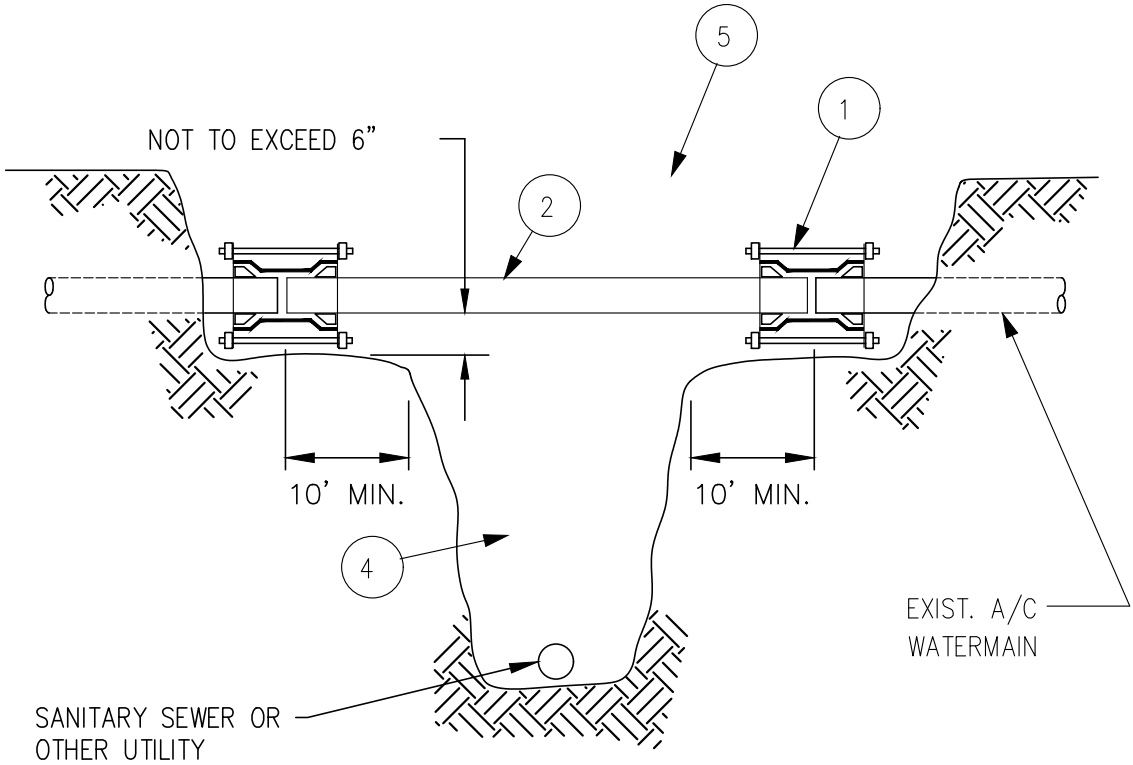

NOTES:

1. COUPLING: ASBESTOS-CEMENT (A/C) BY DUCTILE IRON (DUCTILE IRON, ROMAC STYLE 501, OR DISTRICT APPROVED EQUAL).

2. DUCTILE IRON PIPE, CL. 52, DIAMETER TO MATCH EXISTING A/C.

3. BACKFILL EXISTING A/C AND COUPLING 5/8" MINUS TO 1' ABOVE PIPE.

4. BACKFILL UNDER WATERLINE WITH 5/8" MINUS COMPACTED TO 95% MDD, OR CONTROL DENSITY FILL (CDF).

5. BACKFILL OVER THE TOP OF THE WATERLINE SHALL BE 5/8" MINUS COMPACTED TO 95% MDD, OR CONTROL DENSITY FILL (CDF) PER THE LATEST EDITION OF THE WSDOT STANDARD SPECIFICATIONS, WITHIN ROAD TRAVEL SURFACE. BACKFILL OVER THE TOP OF THE PIPE WITH NATIVE MATERIAL COMPACTED TO 90% MDD IF LOCATED WITHIN EASEMENT OR UNIMPROVED AREA.

6. CONTRACTOR/DEVELOPER IS REQUIRED TO PROPERLY DISPOSE OF A/C PIPE MATERIAL.

Lake Meridian
WATER DISTRICT

AC WATER MAIN REPLACEMENT AT UTILITY CROSSING

APPROVED:

DISTRICT — DATE 6/15/21

REVISION DATE: MAY 2021	DRAWN: MTM	CHECKED: BRL	SCALE: NTS

Gray & Osborne, Inc.
CONSULTING ENGINEERS

L:\Lake Meridian WD\District Documents and Standards\Standard Details\Water Details_2021\15.dwg, 6/17/2021 10:12 AM, MADISON MCCROSKY

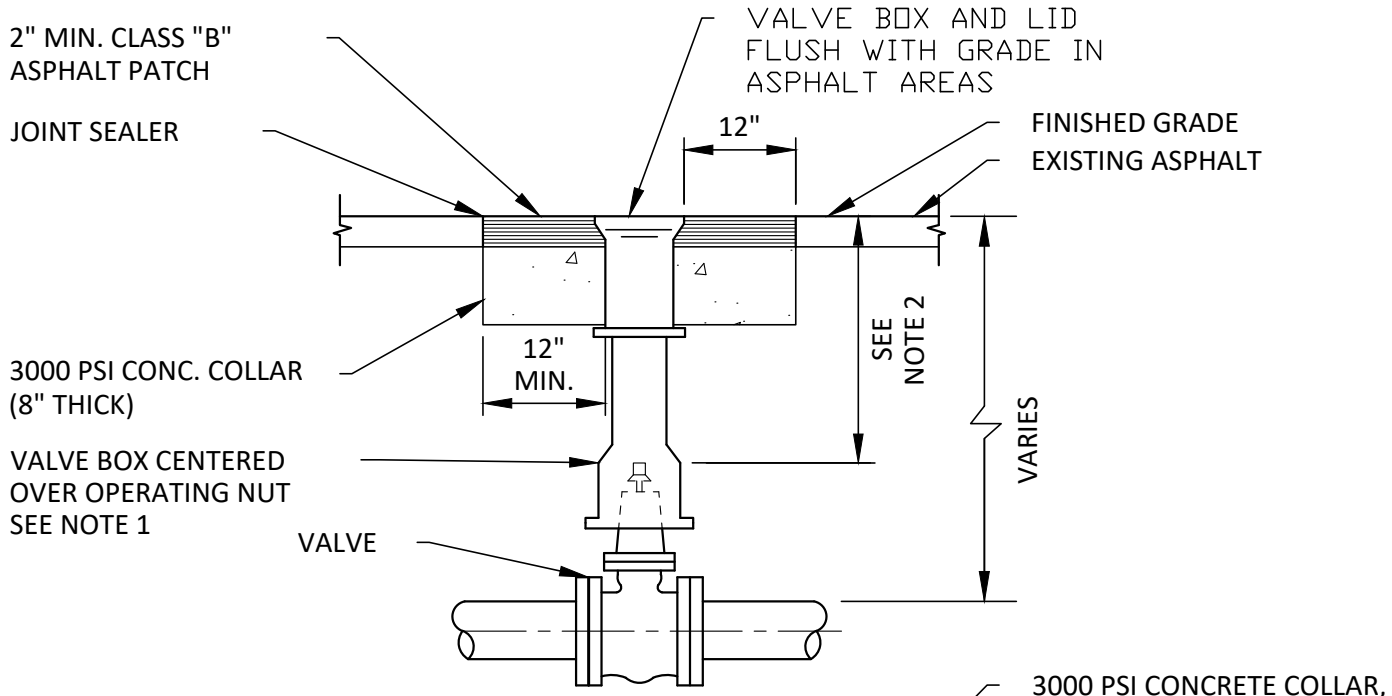

PAVED AREAS

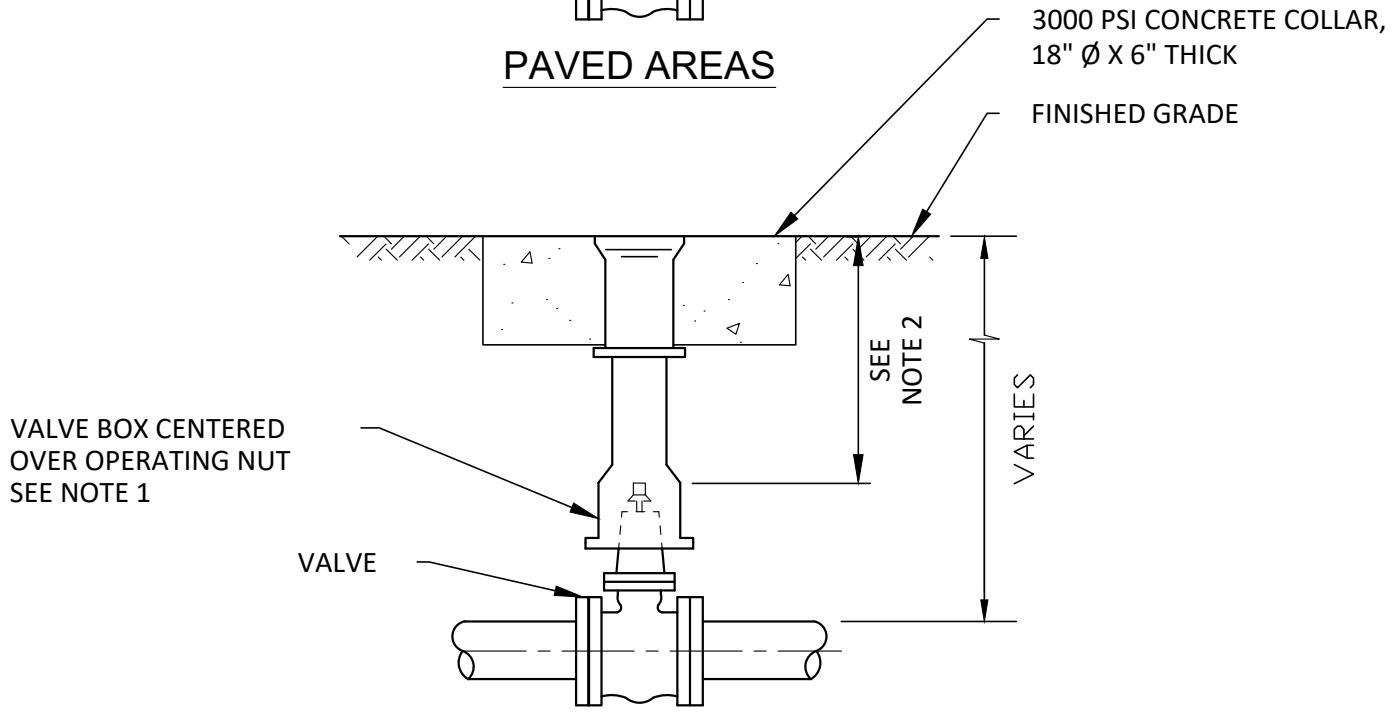

UNPAVED AREAS

NOTES:

1. EACH VALVE SHALL BE PROVIDED WITH AN ADJUSTABLE CAST IRON VALVE BOX OF 5-1/4" INSIDE DIAMETER. VALVE BOXES SHALL HAVE A TOP SECTION WITH AN 18" MIN. LENGTH. THE VALVE BOX SHALL BE OLYMPIC FOUNDRY PART NUMBER 045 OR DISTRICT APPROVED EQUAL.

2. 15" MINIMUM, 36" MAXIMUM FOR OPERATOR NUT. EXTENSION MAY BE REQUIRED.

Lake Meridian
WATER DISTRICT

VALVE BOX DETAIL

APPROVED:

DISTRICT

6/15/21
DATE

REVISION DATE: **MAY 2021** | DRAWN: **MTM** | CHECKED: **BRL** | SCALE: **NTS**

Gray & Osborne, Inc.
CONSULTING ENGINEERS

L:\Lake Meridian WD\District Documents and Standards\Standard Details\Water Details_2021\16.dwg, 6/17/2021 10:12 AM, MADISON MCCROSKY

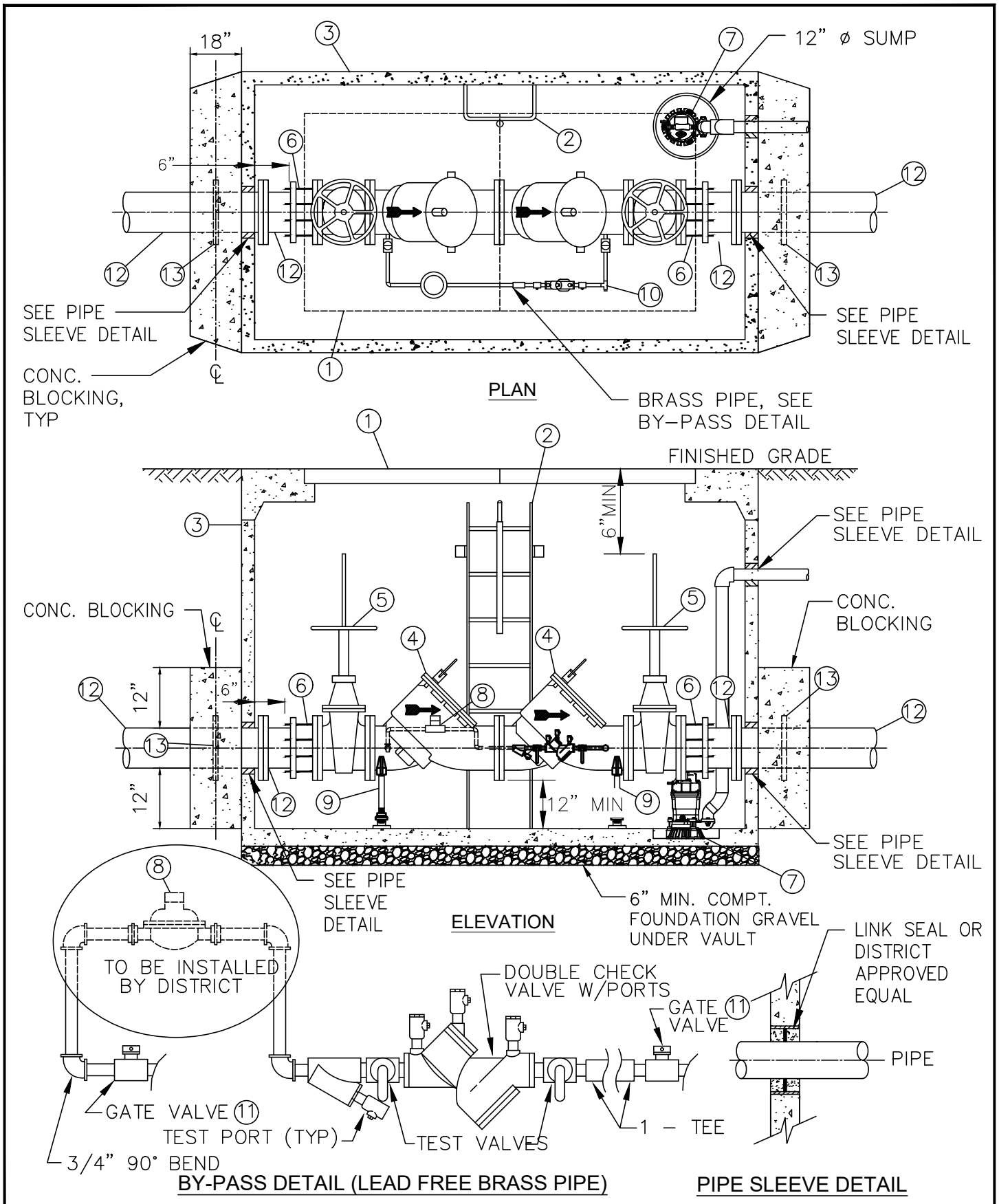

Lake Meridian WATER DISTRICT

4"-10" DOUBLE CHECK BACKFOW PREVENTION ASSEMBLY

APPROVED:

DISTRICT

6/15/21 DATE

REVISION DATE: MAY 2021	DRAWN: MTM	CHECKED: BRL	SCALE: NTS

Gray & Osborne, Inc. CONSULTING ENGINEERS

17A

L:\Lake Meridian WD\District Documents and Standards\Standard Details\Water Details_2021\17A.dwg, 6/17/2021 10:13 AM, MADISON MCCROSKY

VAULT SIZES			
PIPE SIZE	OLDCASTLE PRECAST VAULT NO.	OLDCASTLE PRECAST COVER NO.	LW PRODUCTS ACCESS HATCH NO.
4"	575–LA	57TL–2–332P	HD–1B (36"x60")
6" & 8"	4484–LA	4484–TL–2–332P	HD–1B (36"x60")
10"	5106–LA	5106–TL3–332	HD–2D (42"x72")

GENERAL NOTES:

1. PAINT ALL INTERIOR METAL INCLUDING PIPE, VALVES, AND FITTINGS WITH TWO COATS OF EPOXY AS APPROVED BY THE ENGINEER. USE "STEELCOTE" EPOXY ZINC PRIMER, (E–100–14) AND POLYAMIDE EPOXY, (E–100). APPLY PER MANUFACTURERS INSTRUCTIONS.
2. THE ABOVE VAULT SIZES WERE SUPPLIED BY UTILITY VAULT CO. AS A REFERENCE FOR REQUIRED VAULT DIMENSIONS. SHOP DRAWINGS SHALL BE SUBMITTED FOR APPROVAL.
3. ALL ACCESS COVERS MUST BE MARKED "WATER", AND BE LOCKING, TRAFFIC BEARING.
4. WHEN BREAK–A–WAY ANCHOR STUDS ARE USED ON THE FLANGED COUPLING ADAPTOR, CLASS 52 D.I.PIPE IS REQUIRED.
5. OWNER IS RESPONSIBLE FOR MAINTAINING ACCESS TO VAULT FOR DISTRICT INSPECTION AND METER READING.

MATERIAL LIST

1	ACCESS HATCH	MODEL "HD" (H–20 RATING) DOUBLE LEAF DOOR, LW PRODUCTS CO., INC. (SEE TABLE ABOVE)
2	LADDER RUNGS	CAST IN PLACE 3/4" GALV. BAR AT 12" O.C. OR FABRICATED ALUMINUM LADDER SECURED AT TOP AND BOTTOM W/ BILCO LADDER–UP SAFETY POST.
3	CONCRETE VAULT	SUBMIT DETAILS FOR APPROVAL. (SEE TABLE ABOVE)
4	METER	DOUBLE CHECK DETECTOR ASSEMBLY MUST BE LISTED IN THE MOST CURRENT COPY OF THE "ACCEPTED CROSS CONNECTION CONTROL ASSEMBLIES" PUBLISHED BY THE UNIVERSITY OF SOUTHERN CALIFORNIA. TYPE SHALL BE APPROVED BY THE DISTRICT.
5	VALVE	TWO EACH, AWWA, FLANGED OS & Y GATE VALVES WITH HANDWHEEL. MUST BE LOCATED INSIDE OF VAULT
6	RESTRAINED FLANGE COUPLING ADAPTER	TWO EACH, DUCTILE IRON. ROMAC OR DISTRICT APPROVED EQUAL
7	SUMP PUMP	TSURUMI SUBMERSIBLE PUMP WITH FLOAT SWITCH. DISCHARGE SIZE AND MOTOR HORSEPOWER TO BE APPROVED DURING PLAN REVIEW. DISCHARGE PIPE TO BE SCH 40 PVC. CONNECT DISCHARGE TO STORM. OWNER IS RESPONSIBLE FOR MAINTAINING PUMP AND PROVIDING POWER TO PUMP.
8	WATER METER	5/8" x 3/4" TO BE INSTALLED BY THE DISTRICT.
9	PIPE SUPPORT	TWO EA., ADJUSTABLE PIPE SADDLE SUPPORT (GRINNELL #264 OR EQUIV.)
10	TEE	3/4" LEAD FREE BRASS WITH 3/4" BUSHING AND PLUG.
11	GATE VALVE	3/4" LEAD FREE BRONZE BYPASS GATE VALVES (ASTM B62).
12	PIPE	DI PIPE, CLASS 52, FLXPE SPOOL, LENGTH AS REQUIRED
13	RESTRAINED FOLLOWER	

* SEE SHEET 17A FOR ADDITIONAL DETAILS

Lake Meridian WATER DISTRICT

4"-10" DOUBLE CHECK VALVE BACKFLOW PREVENTION ASSEMBLY

APPROVED:

DISTRICT — DATE 6/15/21

REVISION DATE: MAY 2021	DRAWN: MTM	CHECKED: BRL	SCALE: NTS

Gray & Osborne, Inc. CONSULTING ENGINEERS

17B

L:\Lake Meridian WD\District Documents and Standards\Standard Details\Water Details_2021\17B.dwg, 6/17/2021 10:13 AM, MADISON MCCROSKY

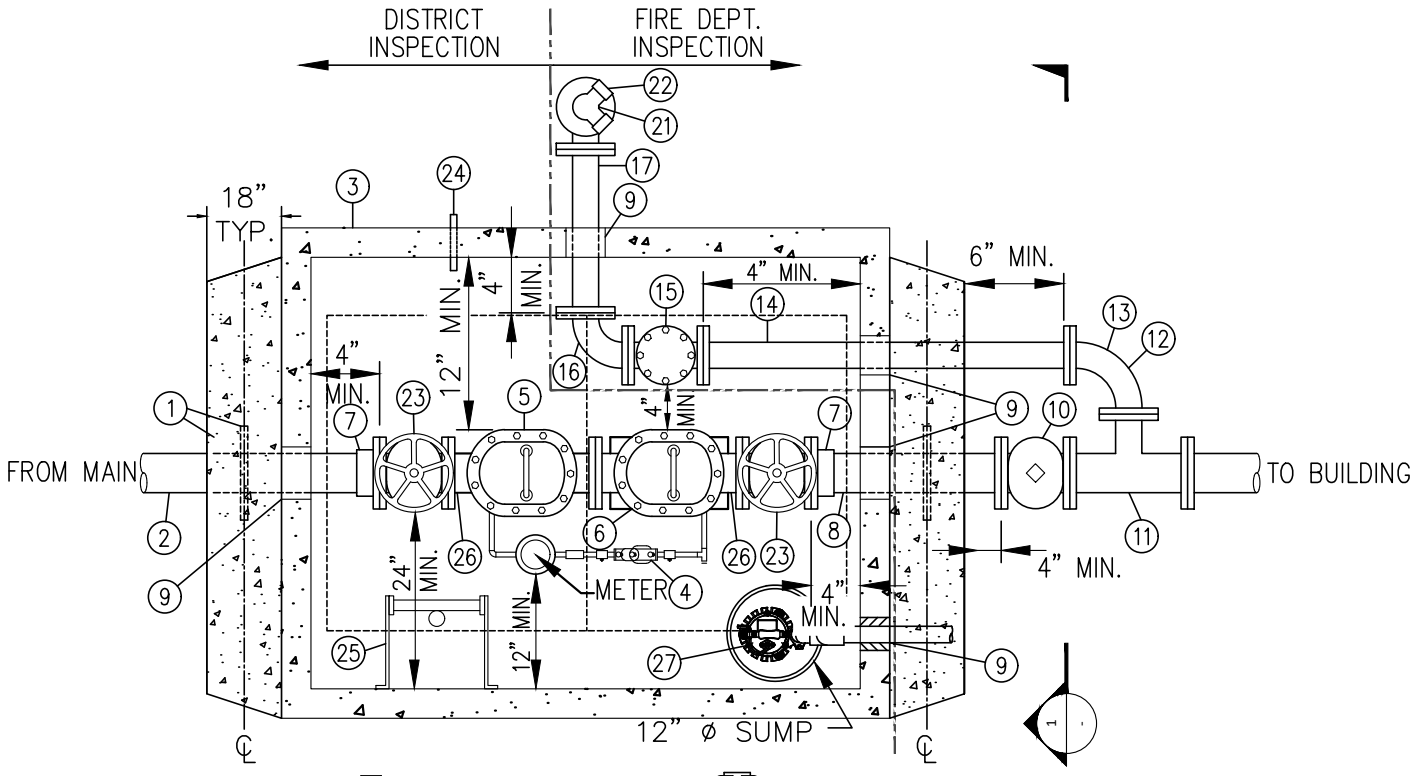

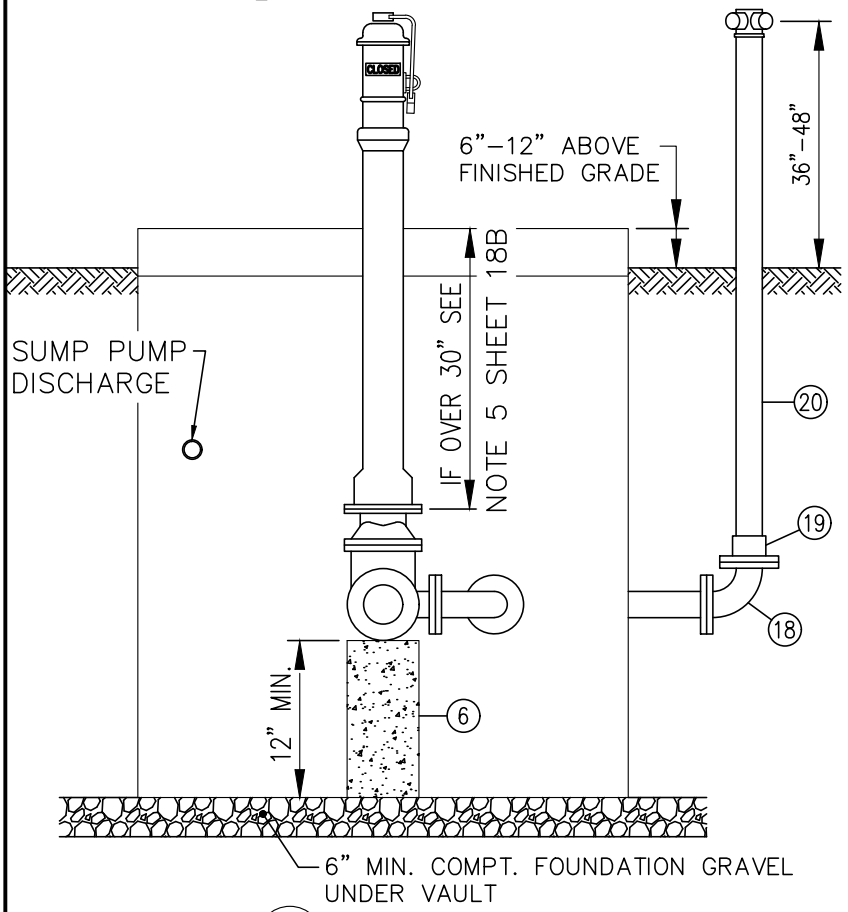

1 / - **SECTION**
NTS

NOTES:

1. MINIMUM CLEARANCES IN VAULT ARE DEPENDENT UPON LOCATION OF PUMPER CONNECTION.
2. DCVA BY–PASS/METER TO BE OPPOSITE SIDE OF CHECK VALVE.
3. SEE STANDARD DETAILS 18B AND 18C FOR MATERIAL LIST & NOTES.

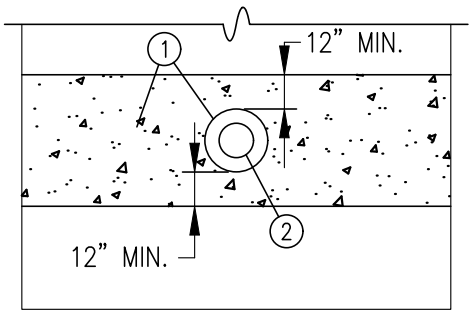

DETAIL "A"

Lake Meridian WATER DISTRICT

DOUBLE DETECTOR CHECK AND VAULT ASSEMBLY (4" OR GREATER)

APPROVED:

DISTRICT — DATE 6/15/21

REVISION DATE: MAY 2021	DRAWN: MTM	CHECKED: BRL	SCALE: NTS

Gray & Osborne, Inc. CONSULTING ENGINEERS

18A

L:\Lake Meridian WD\District Documents and Standards\Standard Details\Water Details_2021\18A.dwg, 6/17/2021 10:13 AM, MADISON MCCROSKY

MATERIAL LIST

1. CONC. BLOCKING W/ RESTRAINED FOLLOWER RING AS SHOWN, TYP BOTH SIDES OF VAULT. SEE DETAIL "A" ON STANDARD DETAIL 18A.
2. 4" MIN. D.I. CLASS 52.
3. PRECAST CONC. VAULT. SEE TABLE ON DETAIL 18C.
4. APPROVED DCVA IN BYPASS LINE (FROM CURRENT COPY OF "ACCEPTED CROSS CONNECTION CONTROL ASSEMBLIES" PUBLISHED BY THE UNIVERSITY OF SOUTHERN CALIFORNIA) SHALL BE ON OPPOSITE SIDE OF PUMPER LINE. ALL BYPASS PIPING SHALL BE LEAD FREE BRASS.
5. APPROVED DCDA IN MAIN LINE (FROM CURRENT COPY OF "ACCEPTED CROSS CONNECTION CONTROL ASSEMBLIES" PUBLISHED BY THE UNIVERSITY OF SOUTHERN CALIFORNIA).
6. CONCRETE SUPPORT PAD
7. 10", 8", 6" OR 4" RESTRAINED FL. COUPLING ADAPTER
8. 10", 8", 6" OR 4" PExFL PIPE
9. LINK SEAL OR DISTRICT APPROVED EQUAL
10. 10", 8", 6", OR 4" GATE VALVE, FL, W/POST INDICATOR W/TAMPER SWITCH.
11. 10", 8", 6", OR 4" TEE, FL.
12. 10", 8", 6", OR 4" REDUCING 90° BEND, FL. AS REQ'D.
13. 6" OR 4" LONG RADIUS 90° BEND, FL.
14. 6" OR 4" SPOOL, FL.
15. 6" OR 4" SWING TYPE GRAVITY OPERATED CHECK VALVE, FL. W/BALL DRIP.
16. 4" OR 6" 90° BEND, FL.
17. 4" OR 6" SPOOL, FLx FL.
18. 6" OR 4" 90° VERTICAL BEND, FLxFL.
19. FLxIP ADAPTER
20. 6" OR 4" GALV. PIPE, THREADED, LENGTH AS REQ'D (SEE STD. DETAIL 18A).
21. 4"x4"x6" BULL, ELBOW, THREADED.
22. UL LISTED FD CONNECTION & UL LISTED BREAK AWAY CAPS. LOCATE WITHIN 50' MAX. OF A PUBLIC FIRE HYDRANT.
23. O.S. & Y VALVES TO RE RESILIENT SEATED W/ TAMPER SWITCHES. ADD WIRING IN ACCORDANCE W/ L & I (SEE NOTE 11 ON DETAIL 18C.)
24. GALV. CONDUIT SLEEVE, SEALED BOTH ENDS, FOR ELECTRONIC MONITORING WIRES.
25. LADDER W/ BILCO LADDER-UP POLE AS REQ'D PER OSHA.
26. TWO EA., ADJUSTABLE PIPE SADDLE SUPPORT (GRINNELL #264 OR EQUIV.)
27. TSURUMI SUBMERSIBLE PUMP WITH FLOAT SWITCH. DISCHARGE SIZE AND MOTOR HORSEPOWER TO BE APPROVED DURING PLAN REVIEW. DISCHARGE PIPE TO BE SCH 40 PVC. CONNECT DISCHARGE TO STORM. OWNER IS RESPONSIBLE FOR MAINTAINING PUMP AND PROVIDING POWER TO PUMP.

*SEE STANDARD DETAILS 18A AND 18C FOR ADDITIONAL DETAILS

Lake Meridian WATER DISTRICT

DETECTOR DOUBLE CHECK & VAULT ASSEMBLY LIST & NOTES

APPROVED:

DISTRICT — DATE 6/15/21

REVISION DATE: MAY 2021	DRAWN: MTM	CHECKED: BRL	SCALE: NTS

Gray & Osborne, Inc. CONSULTING ENGINEERS

18B

L:\Lake Meridian WD\District Documents and Standards\Standard Details\Water Details_2021\18B.dwg, 6/17/2021 10:14 AM, MADISON MCCROSKY

VAULT SIZES			
PIPE SIZE	OLDCASTLE PRECAST VAULT NO.	OLDCASTLE PRECAST COVER NO.	LW PRODUCTS ACCESS HATCH NO.
4"	575-LA	57TL-2-332P	HD-1B (36"x60")
6" & 8"	4484-LA	4484-TL-2-332P	HD-1B (36"x60")
10"	5106-LA	5106-TL3-332	HD-2D (42"x72")

4 -INCH OR LARGER DETECTOR DOUBLE CHECK AND VAULT ASSEMBLY NOTES

1. VAULT DIMENSIONS BASED ON SIZE OF APPARATUS AND MEETING MINIMUM CLEARANCES.
2. ALL VAULT LIDS SHALL HAVE MODEL "HD" (H-20 RATING) DOUBLE LEAF DOOR (LW PRODUCTS COMPANY, INC.)
3. MINIMUM APPARATUS SIZE SHALL BE 4 INCHES.
4. VAULT SHALL BE SEALED TO PREVENT WATER LEAKAGE.
5. LADDERS SHALL BE REQUIRED WHEN DEPTH FROM TOP OF LID TO TOP OF APPARATUS EXCEEDS 30" AND/OR THE APPARATUS IS MORE THAN 12" ABOVE THE FLOOR. INSTALLATION OF ALL LADDERS SHALL BE EQUIPPED W/ BILCO LADDER-UP SAFETY POST.
6. ALL BACK FLOW PREVENTORS SHALL BE ON THE LATEST APPROVED LIST APPROVED BY THE UNIVERSITY OF SOUTHERN CALIFORNIA.
7. MAKE ALL ATTEMPTS TO LOCATE VAULT IN PLANTING AREA NOT IN PAVING AREA.
8. ALL BENDS AND ELBOWS TO BE DUCTILE IRON CEMENT LINED.
9. TEMPORARY SUPPORT SHALL BE PROVIDED UNDER VALVES AT THE TIME OF INSTALLATION AFTER COMPLETE INSTALLATION REMOVE THE TEMPORARY SUPPORT AND INSTALL PIPE SUPPORTS AS INDICATED ABOVE.
10. ALL PIPE TO BE DUCTILE IRON CEMENT LINED CLASS 52 PIPE EXCEPT WHERE INDICATED INSTALLATION MUST ALLOW CLEARANCE FOR PROPER OPERATION OF ALL O.S. AND Y'S.
11. GALVANIZED STEEL PIPE SHALL BE WRAPPED WITH POLYETHELENE WRAPPING 10mm THICKNESS.
12. OWNER IS RESPONSIBLE FOR MAINTAINING ACCESS TO VAULT FOR DISTRICT INSPECTION AND METER READING

*SEE STANDARD DETAILS 18B AND 18C FOR ADDITIONAL DETAILS

Lake Meridian
WATER DISTRICT

DETECTOR DOUBLE CHECK & VAULT ASSEMBLY LIST

APPROVED:
DISTRICT — DATE 6/15/21

REVISION DATE: MAY 2021	DRAWN: MTM	CHECKED: BRL	SCALE: NTS

Gray & Osborne, Inc.
CONSULTING ENGINEERS

18C

L:\Lake Meridian WD\District Documents and Standards\Standard Details\Water Details_2021\18B.dwg, 6/17/2021 10:14 AM, MADISON MCCROSKY

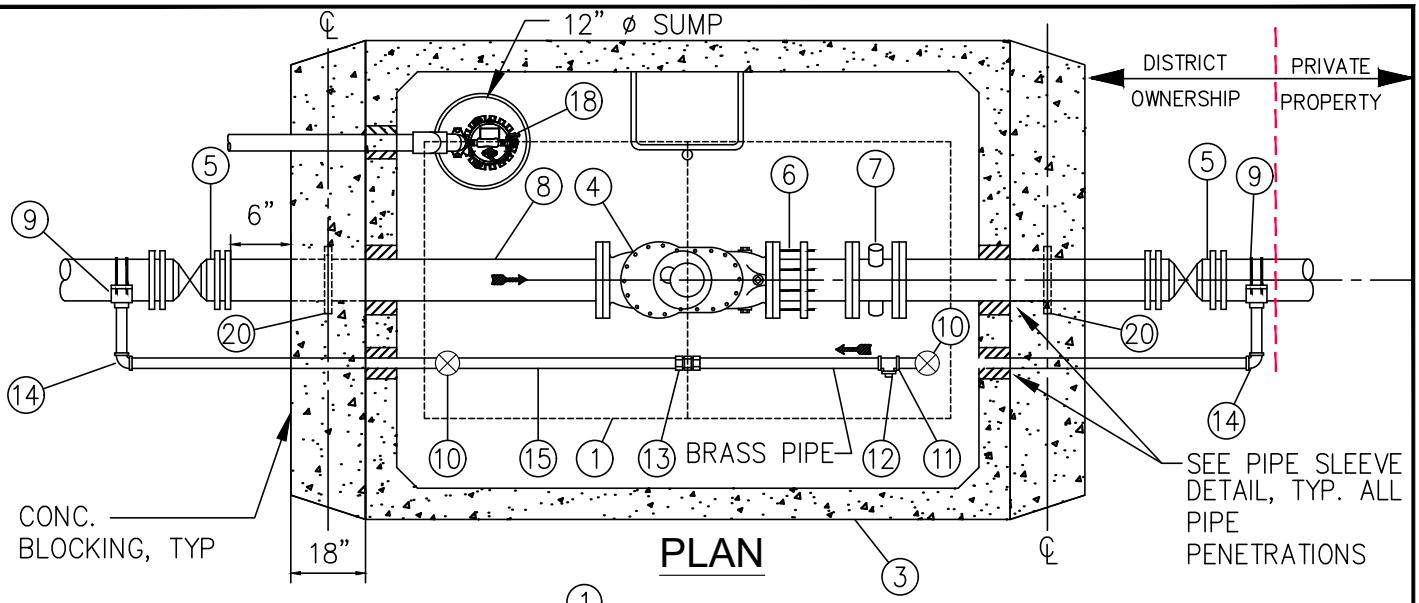

PLAN

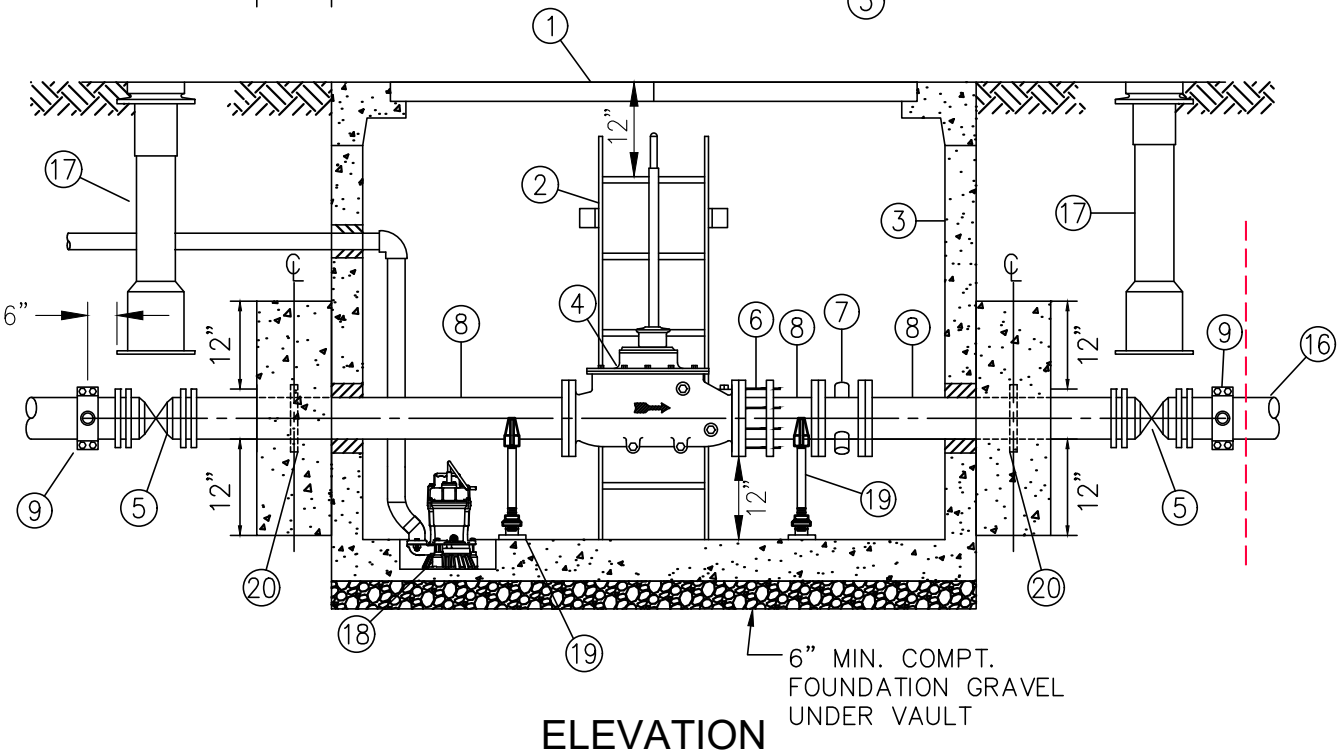

ELEVATION

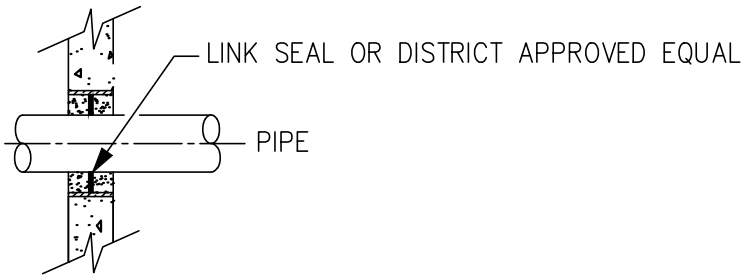

PIPE SLEEVE DETAIL

SEE STANDARD DETAIL 19B FOR MATERIAL LIST & NOTES

Lake Meridian WATER DISTRICT

3", 4" & 6" METERS

APPROVED:

DISTRICT

DATE 6/15/21

REVISION DATE: **MAY 2021** | DRAWN: **MTM** | CHECKED: **BRL** | SCALE: **NTS**

Gray & Osborne, Inc. CONSULTING ENGINEERS

19A

L:\Lake Meridian WD\District Documents and Standards\Standard Details\Water Details_2021\19A.dwg, 6/17/2021 10:14 AM, MADISON MCCROSKY

VAULT SIZES			
METER SIZE	OLDCASTLE PRECAST VAULT NO.	OLDCASTLE PRECAST COVER NO.	LW PRODUCTS ACCESS HATCH NO.
3"	575-LA	57TL-2-332P	HD-1B (36"x60")
4"	575-LA	57TL-2-332P	HD-1B (36"x60")
6"	675-LA	675TL-2-332P	HD-2C (42"x60")

GENERAL NOTES:

1. PAINT ALL INTERIOR METAL INCLUDING PIPE, VALVES, AND FITTINGS WITH TWO COATS OF EPOXY AS APPROVED BY THE ENGINEER. USE "STEELCOTE" EPOXY ZINC PRIMER, (E-100-14) AND POLYAMIDE EPOXY, (E-100). APPLY PER MANUFACTURERS INSTRUCTIONS.
2. THE ABOVE VAULT SIZES WERE SUPPLIED BY UTILTY VAULT CO. AS A REFERENCE FOR REQUIRED VAULT DIMENSIONS. SHOP DRAWINGS SHALL BE SUBMITTED FOR APPROVAL.
3. ALL ACCESS COVERS MUST BE MARKED "WATER", AND BE LOCKING, TRAFFIC BEARING.
4. WHEN BREAK-A-WAY ANCHOR STUDS ARE USED ON THE FLANGED COUPLING ADAPTOR, CLASS 52 D.I.PIPE IS REQUIRED.
5. GATE VALVES, FL. OR MJ., MUST BE SHACKLED TO THE VAULT WALL. ALTERNATE METHODS OF RESTRAINT SHALL BE APPROVED BY THE DISTRICT.
6. OWNER IS RESPONSIBLE FOR MAINTAINING ACCESS TO VAULT FOR DISTRICT INSPECTION AND METER READING

MATERIAL LIST

1	ACCESS HATCH	MODEL "HD" (H-20 RATING) DOUBLE LEAF DOOR, LW PRODUCTS CO., INC. (SEE TABLE ABOVE)
2	LADDER	FABRICATED ALUMINUM LADDER SECURED AT TOP AND BOTTOM W/ BILCO LADDER-UP SAFETY POST.
3	CONCRETE VAULT	SUBMIT DETAILS FOR APPROVAL. (SEE TABLE ABOVE)
4	METER	COMPOUND WATER METER FLG. x FLG. SUPPLIED BY DISTRICT.
5	R.S. GATE VALVE	TWO EACH, MJ xMJ W/ RESTRAINED JOINTS.
6	RESTRAINED FLANGE COUPLING ADAPTER	ONE EACH, DUCTILE IRON
7	TEST SPOOL	6"x 6" FLG. x FLG. (JCM 831 OR DISTRICT APPROVED EQUAL)
8	DI SPOOL	CLASS 52 PLAIN-END x FLANGE
9	SADDLE	TWO EA. 1-1/2 INCH DOUBLE STAINLESS STEEL STRAP SERVICE SADDLE (IPT) (ROMAC 202S OR DISTRICT APPROVED EQUAL)
10	1-1/2" VALVE	TWO EA. BRASS BALL VALVES FORD B11-666W-NL OR DISTRICT APPROVED EQUAL
11	TEE	1-1/2"x 1-1/2" LEAD FREE BRASS TEE.
12	BUSHING	1 1/2"x 3/4" LEAD FREE BUSHING WITH 3/4" PLUG.
13	UNION	ONE EA. 1-1/2 INCH TWO-PART UNION LEAD FREE BRASS.
14	BEND	TWO EA. 1-1/2 INCH 90° LEAD FREE BRASS BENDS.
15	BY-PASS PIPE	1-1/2 INCH LEAD FREE BRASS PIPE AS NEEDED.
16	WATER MAIN	CLASS 52 DUCTILE IRON PIPE WITH MEGALUG RESTRAINED JOINTS.
17	VALVE BOX	TWO EA. SEE STANDARD DETAIL 16
18	SUMP PUMP	TSURUMI SUBMERSIBLE PUMP WITH FLOAT SWITCH. DISCHARGE SIZE AND MOTOR HORSEPOWER TO BE APPROVED DURING PLAN REVIEW. DISCHARGE PIPE TO BE SCH 40 PVC. CONNECT DISCHARGE TO STORM. OWNER IS RESPONSIBLE FOR MAINTAINING PUMP AND PROVIDING POWER TO PUMP.
19	PIPE SUPPORT	TWO EA., ADJUSTABLE PIPE SADDLE SUPPORT (GRINNELL #264 OR EQUIV.)
20	RESTRAINED FOLLOWER	

* SEE STANDARD DETAIL 19A FOR ADDITIONAL DETAILS

Lake Meridian WATER DISTRICT

3", 4", & 6" METERS MATERIAL LIST AND GENERAL NOTES

APPROVED:

DISTRICT — DATE 6/15/21

REVISION DATE: MAY 2021	DRAWN: MTM	CHECKED: BRL	SCALE: NTS

Gray & Osborne, Inc. CONSULTING ENGINEERS

19B

L:\Lake Meridian WD\District Documents and Standards\Standard Details\Water Details_2021\19B.dwg, 6/17/2021 10:14 AM, MADISON MCCROSKY

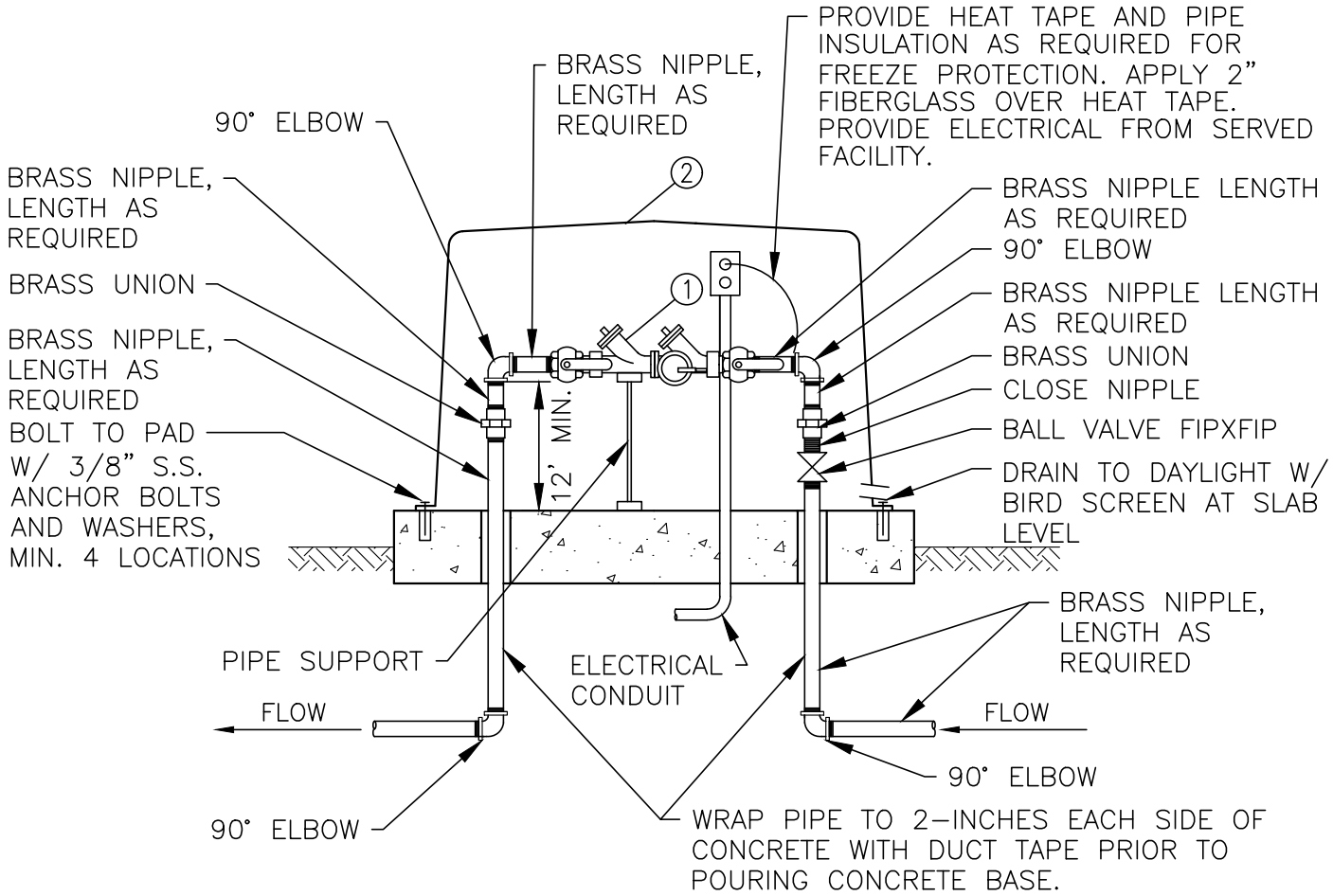

① REDUCED PRESSURE BACKFLOW ASSEMBLY (RPBA) WITH TEST COCK PROTECTION AND BRONZE BODY BALL VALVE AT EACH END. RPBA SHALL BE APPROVED DEVICE FROM CURRENT COPY OF "ACCEPTED CROSS CONNECTION CONTROL ASSEMBLIES" PUBLISHED BY THE UNIVERSITY OF SOUTHERN CALIFORNIA.

② "HOT BOX" HB SERIES INSULATED ENCLOSURE SIZED FOR ASSEMBLY. ARCHITECTURAL COVERS WILL BE CONSIDERED BY DISTRICT.

NOTES:

1. CONCRETE TO BE 3000 PSI MIX.
2. COMPLETE ALL WORK IN ACCORDANCE WITH STATE, DISTRICT AND MANUFACTURER STANDARDS.
3. SYSTEM SHALL NOT BE PUT INTO SERVICE UNTIL RPBA IS APPROVED BY THE DISTRICT AND TESTED/CERTIFIED BY A WASHINGTON STATE LICENSED BACKFLOW ASSEMBLY TESTER.
4. RPBA IS CONSIDERED PART OF THE PRIVATE SYSTEM AND SHALL BE MAINTAINED BY THE PROPERTY OWNER WITH ANNUAL CERTIFICATION REQUIRED.
5. ALL FITTINGS TO BE LEAD FREE BRASS.
6. NO BRANCH CONNECTIONS ALLOWED BETWEEN METER AND RPBA.

Lake Meridian WATER DISTRICT

REDUCED PRESSURE BACKFLOW ASSEMBLY 1" TO 2"

APPROVED:

DISTRICT — DATE 6/15/21

REVISION DATE: MAY 2021	DRAWN: MTM	CHECKED: BRL	SCALE: NTS

Gray & Osborne, Inc. CONSULTING ENGINEERS

L:\Lake Meridian WD\District Documents and Standards\Standard Details\Water Details_2021\20.dwg, 6/17/2021 10:15 AM, MADISON MCCROSKY

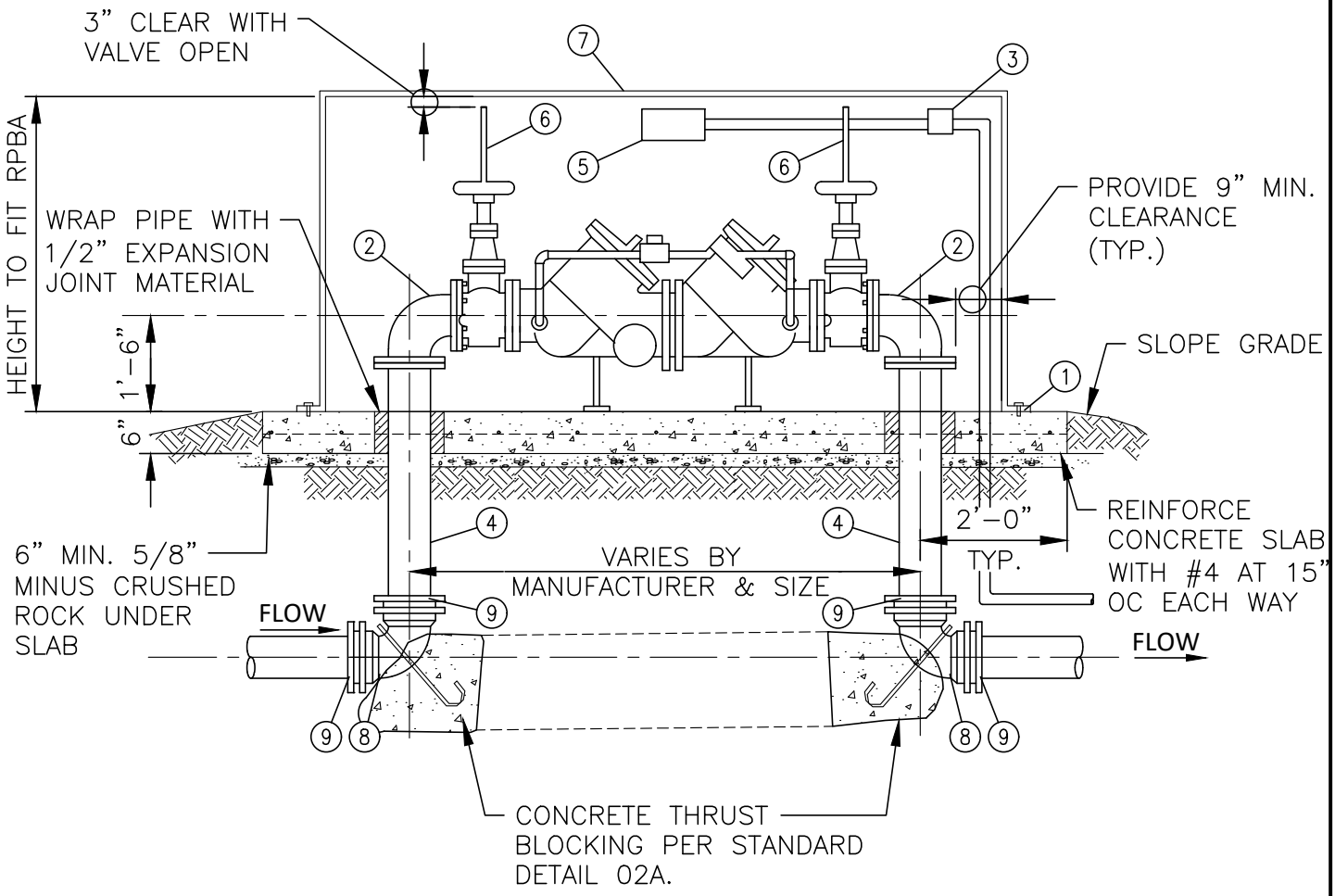

SEE SHEET 21B FOR MATERIAL LIST AND NOTES.

Lake Meridian WATER DISTRICT

REDUCED PRESSURE BACKFLOW ASSEMBLY 3" AND LARGER

APPROVED:

DISTRICT — DATE 6/15/21

REVISION DATE: MAY 2021	DRAWN: MTM	CHECKED: BRL	SCALE: NTS

Gray & Osborne, Inc. CONSULTING ENGINEERS

21A

L:\Lake Meridian WD\District Documents and Standards\Standard Details\Water Details_2021\21.dwg, 6/17/2021 10:15 AM, MADISON MCCROSKY

MATERIAL LIST

1. 3/8" S.S EXP. BOLTS 24" O.C.
2. 90° DI BEND, FLXFL
3. 120 VOLT PULL BOX FOR HEATER CONDUIT & WIRES FROM SEPARATE ELECTRICAL CIRCUIT PROVIDED BY DEVELOPER
4. DI PIPE SPOOL CL 52, FLXPE
5. HOT BOX HEATER SEE NOTE 3.
6. O.S.&Y. R.W. GATE VALVE
7. ALUMINUM HOT BOX ENCLOSURE SEE NOTE 2.
8. 90° DI BEND, MJXMJ
9. MECHANICAL JOINT RESTRAINT, MEGALUG OR DISTRICT APPROVED EQUAL.

3" AND LARGER REDUCED PRESSURE BACKFLOW ASSEMBLY NOTES

1. BACKFLOW ASSEMBLY SHALL BE APPROVED DEVICE FROM CURRENT COPY OF "ACCEPTED CROSS CONNECTION CONTROL ASSEMBLIES" PUBLISHED BY THE UNIVERSITY OF SOUTHERN CALIFORNIA.
2. ALUMINUM "HOT BOX" MODELS 4 THROUGH 10 FOR RESPECTIVE SIZE RPBA SHALL BE MODIFIED TO FIT ABOVE HEIGHT REQUIREMENTS. VALVE STEM SHALL NOT BE ALLOWED TO EXTEND OUTSIDE OF BOX.
3. HEATERS SHALL BE 2,000 WATT FOR 8" AND UNDER AND 3,000 WATT FOR 10" AND LARGER.
4. CONCRETE TO BE 3,000 PSI MIX.
5. COMPLETE ALL WORK IN ACCORDANCE WITH STATE, DISTRICT AND AND SUPPLIER STANDARDS.
6. SYSTEM SHALL NOT BE PUT INTO SERVICE UNTIL RPBA IS APPROVED BY THE DISTRICT AND TESTED/CERTIFIED BY A WASHINGTON STATE LICENSED BACKFLOW ASSEMBLY TESTER.
7. RPBA IS CONSIDERED PART OF THE PRIVATE SYSTEM AND SHALL BE MAINTAINED BY THE PROPERTY OWNER WITH ANNUAL CERTIFICATION REQUIRED.
8. PRESSURE TEST AND DISINFECT PER A.W.W.A. STANDARDS.

Lake Meridian
WATER DISTRICT

REDUCED PRESSURE BACKFLOW ASSEMBLY 3" AND LARGER

APPROVED:
DISTRICT — DATE 6/15/21

REVISION DATE: MAY 2021	DRAWN: MTM	CHECKED: BRL	SCALE: NTS

Gray & Osborne, Inc.
CONSULTING ENGINEERS

21B

L:\Lake Meridian WD\District Documents and Standards\Standard Details\Water Details_2021\21.dwg, 6/17/2021 10:15 AM, MADISON MCCROSKY

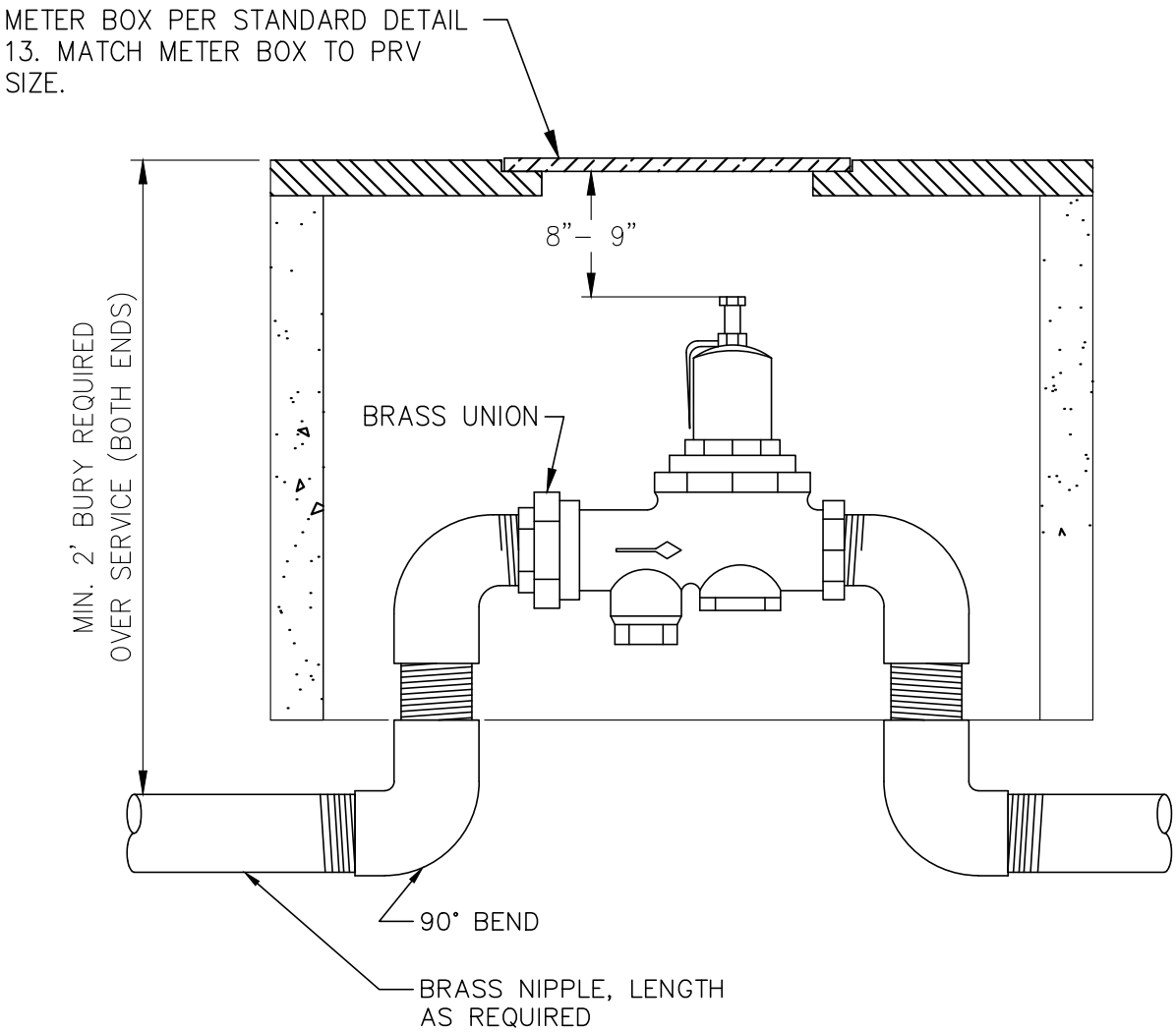

NOTES:

1. BOX TO BE LOCATED BEHIND WATER METER ON PRIVATE PROPERTY & SHALL BE THE PROPERTY OWNERS RESPONSIBILITY TO MAINTAIN. METER BOX PER LAKE MERIDIAN WATER DISTRICT STANDARD DETAIL 13.

2. WILKENS NO. 600 SERIES REGULATOR, ALL BRONZE WATER REDUCING VALVE & STRAINER, 1", 1–1/2", OR 2", BY–PASS, MONEL TRIM. MAX. INITIAL PRESSURE SETTING 50 LBS FOR WATER–AIR OR DISTRICT APPROVED EQUAL.

3. ALL FITTINGS TO BE LEAD FREE BRASS.

Lake Meridian WATER DISTRICT

PRESSURE REDUCING VALVE

APPROVED:

DISTRICT — DATE 6/15/21

REVISION DATE: MAY 2021	DRAWN: MTM	CHECKED: BRL	SCALE: NTS

Gray & Osborne, Inc. CONSULTING ENGINEERS

L:\Lake Meridian WD\District Documents and Standards\Standard Details\Water Details_2021\22.dwg, 6/17/2021 10:15 AM, MADISON MCCROSKY

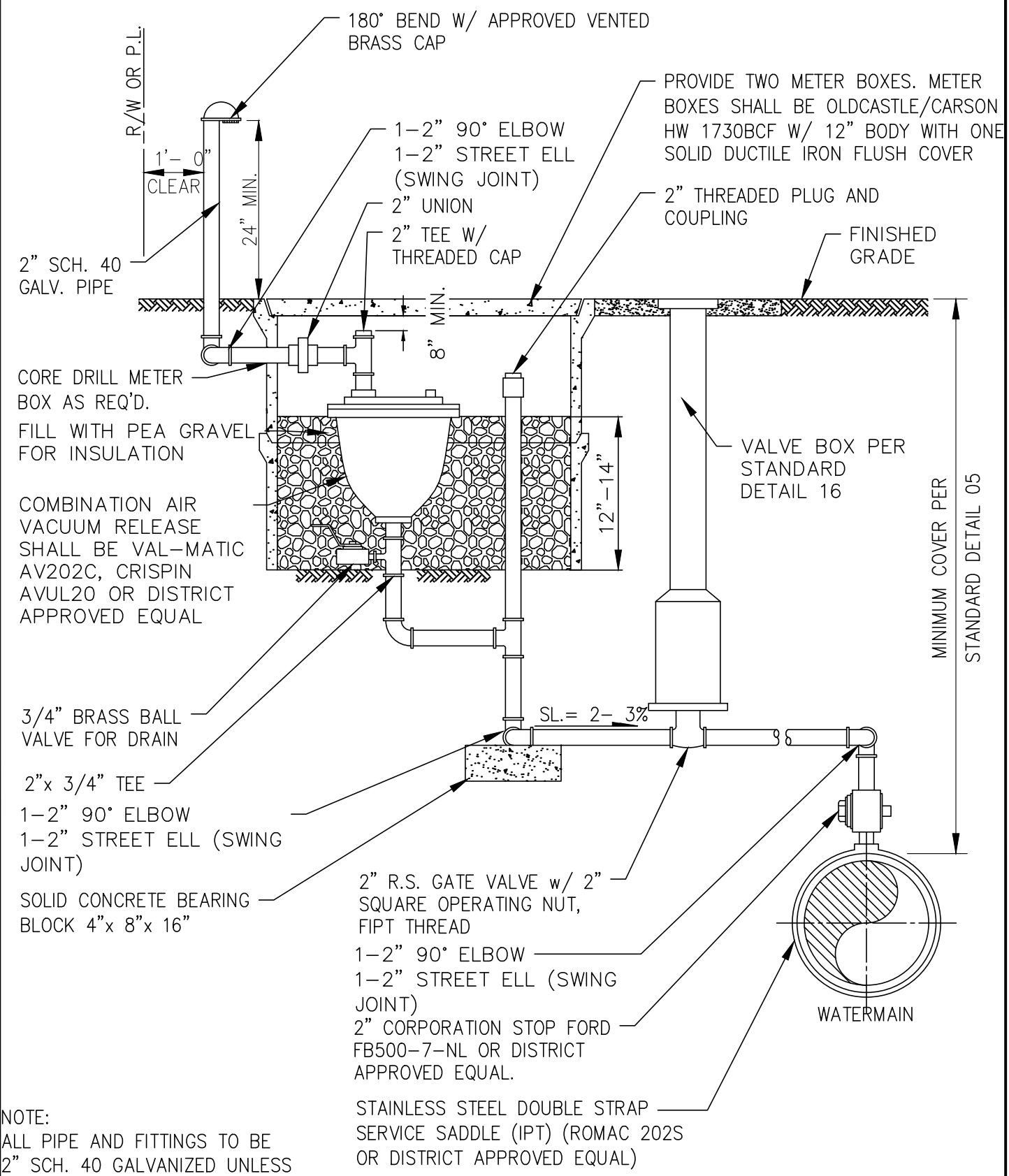

NOTE:
ALL PIPE AND FITTINGS TO BE 2" SCH. 40 GALVANIZED UNLESS OTHERWISE NOTED.

Lake Meridian WATER DISTRICT

2" COMBINATION AIR/VACUUM ASSEMBLY DETAILS

APPROVED:

DISTRICT — DATE 6/15/21

REVISION DATE: MAY 2021	DRAWN: MTM	CHECKED: BRL	SCALE: NTS

Gray & Osborne, Inc. CONSULTING ENGINEERS

L:\Lake Meridian WD\District Documents and Standards\Standard Details\Water Details_2021\23.dwg, 6/17/2021 10:16 AM, MADISON MCCROSKY

Lake Meridian
WATER DISTRICT

APPROVED CONSTRUCTION DRAWINGS

DATE

L:\Lake Meridian WD\District Documents and Standards\Standard Details\Water Details_2021\24.dwg, 6/17/2021 10:16 AM, MADISON MCCROSKY

Lake Meridian
WATER DISTRICT

APPROVAL STAMP

APPROVED:

DISTRICT

6/15/21
DATE

REVISION DATE: **MAY 2021**	DRAWN: **MTM**	CHECKED: **BRL**	SCALE: **NTS**

Gray & Osborne, Inc.
CONSULTING ENGINEERS

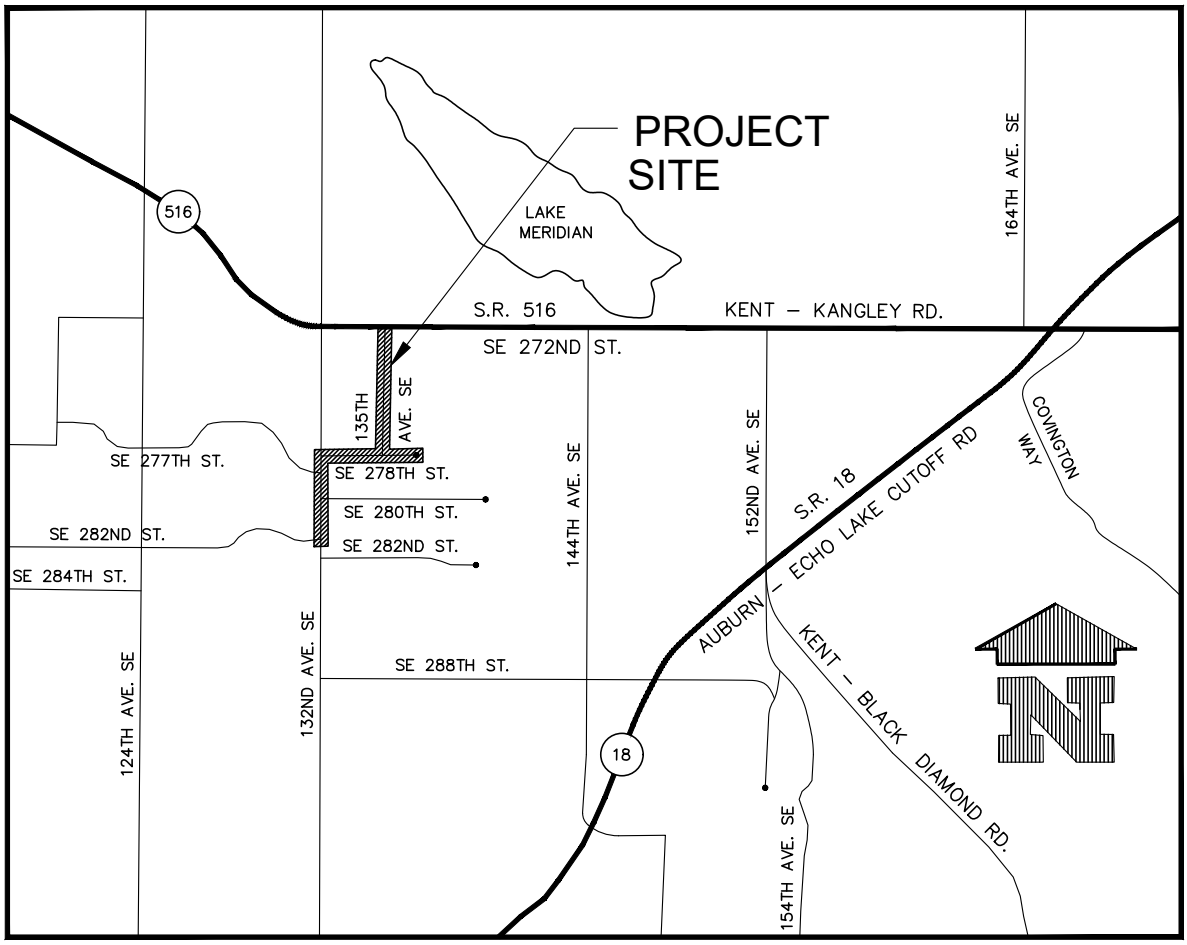

VICINITY MAP

Lake Meridian
WATER DISTRICT

APPROVED:

DISTRICT

6/15/21
DATE

Gray & Osborne, Inc.
CONSULTING ENGINEERS

REVISION DATE: MAY 2021	DRAWN: MTM	CHECKED: BRL	SCALE: NTS

L:\Lake Meridian WD\District Documents and Standards\Standard Details\Water Details_2021\25.dwg, 6/17/2021 10:16 AM, MADISON MCCROSKY

NOTE: ALL SYMBOLS SHOWN AT 20 SCALE

WATER SYMBOLS

EXISTING	PROPOSED	DESCRIPTION
		FIRE HYDRANT (3-NOZZLE)
		WATER METER
		FLANGE/BLIND FLANGE
		MECHANICAL JOINT
		GATE VALVE
		BUTTERFLY VALVE
		CHECK VALVE
		TEE
		COUPLING/ADAPTER
		CAP/PLUG
		FLXMJ ADAPTER
		REDUCER
		BLOW OFF ASSEMBLY
WSS	WSS	SAMPLE STATION

MISCELLANEOUS SYMBOLS

D	D	STORM DRAIN MANHOLE/TYPE 2 CATCH BASIN
		STORM DRAIN CATCH BASIN
S	S	SANITARY SEWER MANHOLE
		CLEAN OUT (SAN. SEWER OR STORM)
BUS	BUS	BUS STOP
		SIGN
		ROCK WALL
		MODULAR BLOCK WALL
		SEGMENTAL BLOCK WALL
		SHRUB
NOTED	NOTED	TREE (CONIFER)
NOTED	NOTED	TREE (DECIDUOUS)
		WETLAND
		EDGE OF CREEK/STREAM OR OHWM

Lake Meridian WATER DISTRICT

STANDARD PLAN LEGEND SYMBOLS

APPROVED:

DISTRICT — DATE 6/15/21

REVISION DATE: MAY 2021 | DRAWN: MTM | CHECKED: BRL | SCALE: NTS

Gray & Osborne, Inc. CONSULTING ENGINEERS

L:\Lake Meridian WD\District Documents and Standards\Standard Details\Water Details_2021\26.dwg, 6/17/2021 10:16 AM, MADISON MCCROSKY

NOTE: ALL LINES AND TEXT SHOWN AT 20 SCALE.

LINETYPES

EXISTING	PROPOSED	
UTILITIES		
		WATER LINE
		WATER SERVICE
OH	OH	OVERHEAD UTILITIES
E	E	BURIED ELECTRICAL
T	T	BURIED TELEPHONE/COMMUNICATIONS
G	G	GAS MAIN (SIZE AS NOTED)
S	S	SANITARY SEWER MAIN (SIZE AS NOTED)
FM	FM	SEWER FORCE MAIN (SIZE AS NOTED)
D	D	STORM DRAIN (SIZE AS NOTED)
D	D	CULVERT (SIZE & TYPE AS NOTED)
		DITCH CENTERLINE
SURFACE FEATURES		
		CURB (TYPE AS NOTED)
		CURB & GUTTER
		ASPHALT PAVEMENT
		GRAVEL SURFACING
		CONCRETE SURFACING
		CEMENT CONC. SIDEWALK
		GUARD RAIL
x x x x x	x x x x x	FENCE/RAILING (TYPE AS NOTED)
SURVEY		
		RIGHT-OF-WAY LINE
		CENTERLINE OF RIGHT-OF-WAY
		PROPERTY LINE
		PERMANENT EASEMENT LINE
10	10	CONTOUR LINE

TEXT

WATER DESIGN TEXT

DESIGN TEXT
STYLE: SIMPLEX
HEIGHT: 2

SE 240TH ST

STREET NAME CALLOUTS
STYLE: ARIAL
HEIGHT: 6

PLAT TEXT

PLAT NAME CALLLOUTS
STYLE: HM0
HEIGHT: 4 OR 3.2

22 EXISTING PLAT LOT NOS.
STYLE: SIMPLEX
HEIGHT: 2.4

12 PROPOSED PLAT LOT NOS.
STYLE: ARIAL
HEIGHT: 2.8

Lake Meridian WATER DISTRICT

STANDARD PLAN LEGEND LINETYPES AND TEXT

APPROVED:
DISTRICT — DATE 6/15/21

REVISION DATE: MAY 2021	DRAWN: MTM	CHECKED: BRL	SCALE: NTS

Gray & Osborne, Inc. CONSULTING ENGINEERS

L:\Lake Meridian WD\District Documents and Standards\Standard Details\Water Details_2021\27.dwg, 6/17/2021 10:17 AM, MADISON MCCROSKY

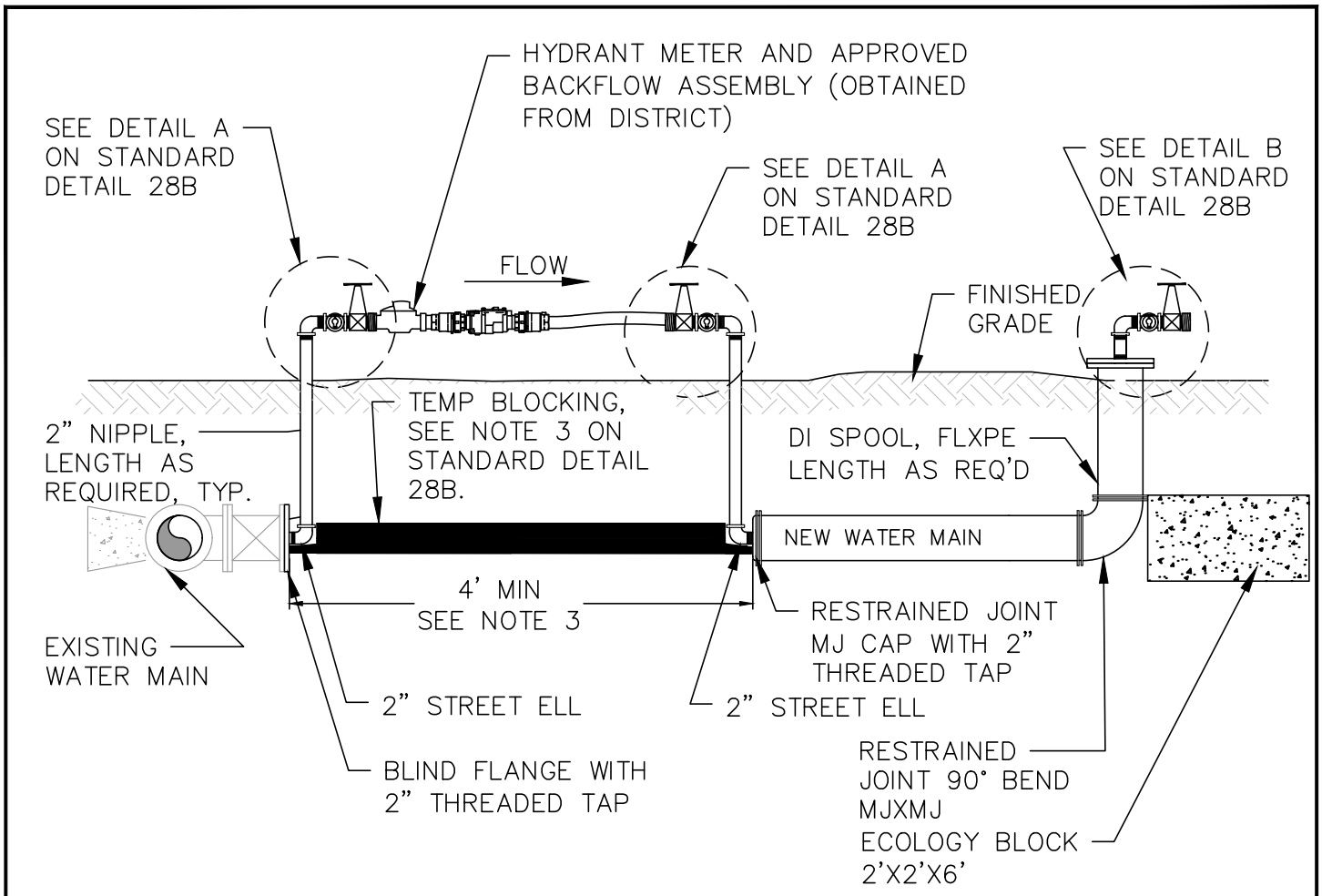

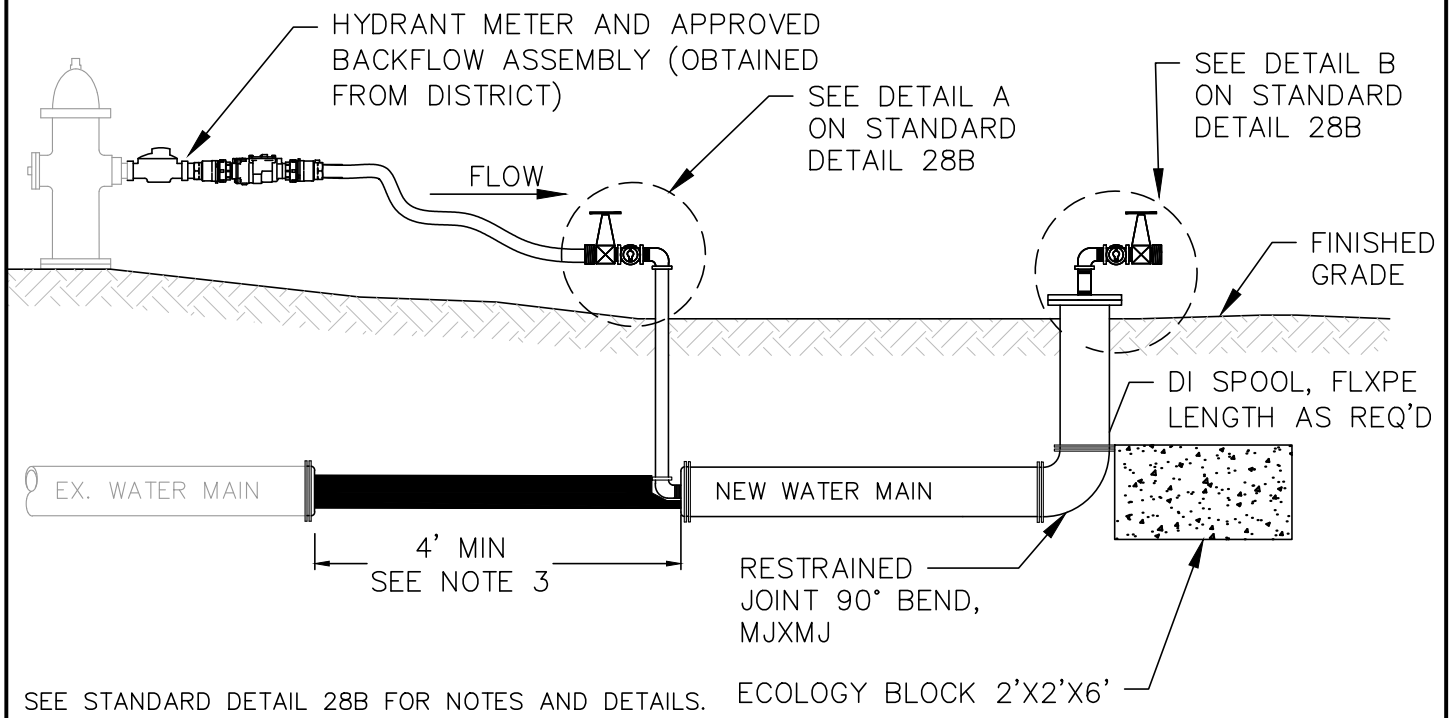

SEE STANDARD DETAIL 28B FOR NOTES AND DETAILS.

Lake Meridian WATER DISTRICT

SEPARATION FROM EXISTING WATER MAIN

APPROVED:

DISTRICT — DATE 6/15/21

REVISION DATE: MAY 2021	DRAWN: MTM	CHECKED: BRL	SCALE: NTS

Gray & Osborne, Inc. CONSULTING ENGINEERS

28A

L:\Lake Meridian WD\District Documents and Standards\Standard Details\Water Details_2021\28.dwg, 6/17/2021 10:17 AM, MADISON MCCROSKY

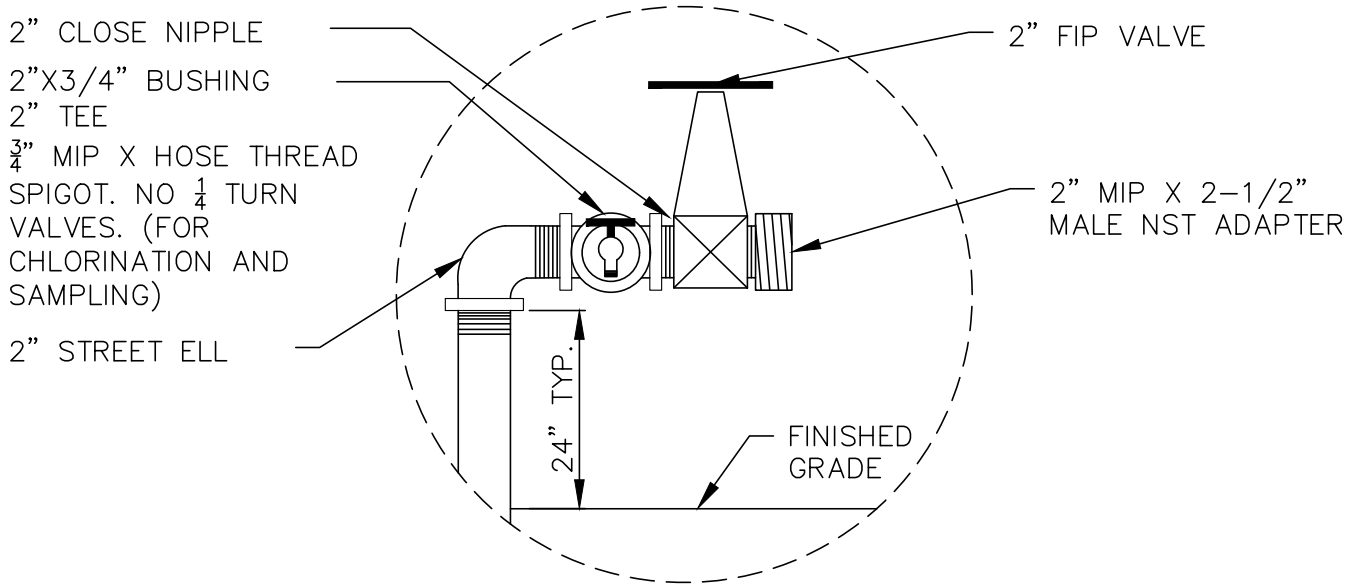

DETAIL A

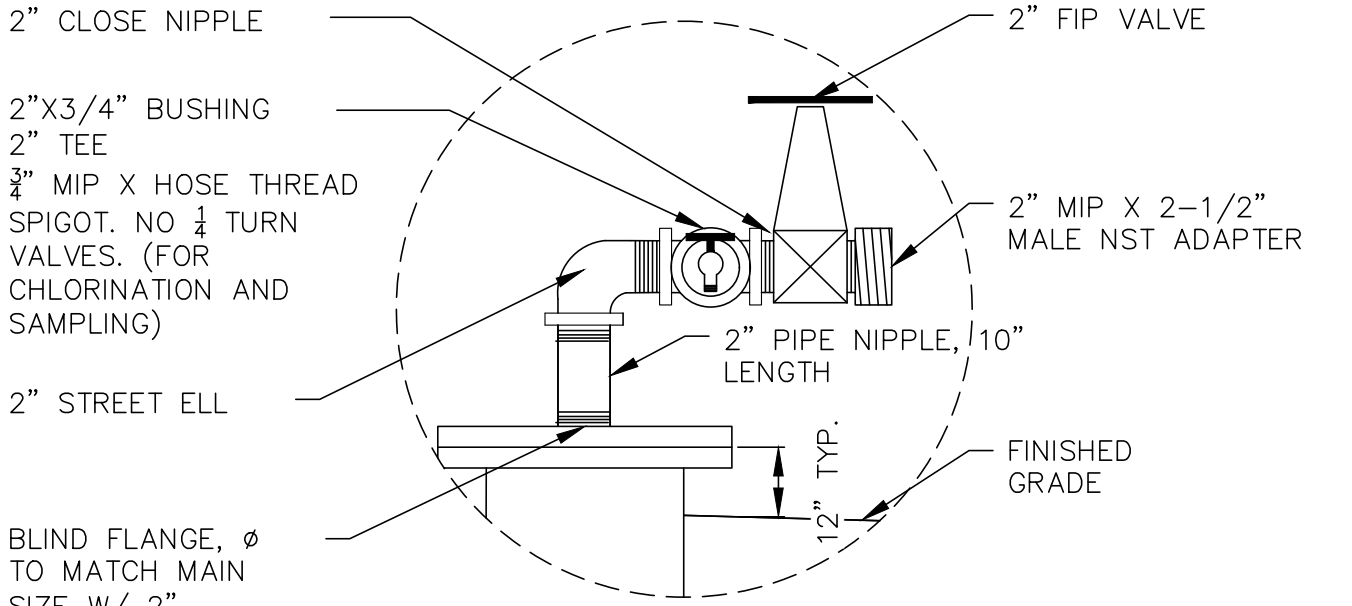

DETAIL B

NOTES:

1. WHEN BOTH SETS OF PURITY SAMPLE RESULTS ARE SATISFACTORY & RECEIVED IN WRITING FROM THE STATE-CERTIFIED LABORATORY, & ALL OTHER LAKE MERIDIAN WATER DISTRICT STANDARDS HAVE BEEN MET, THE CONTRACTOR SHALL BE ALLOWED TO CONNECT THE NEW MAINS TO THE EXISTING DISTRIBUTION SYSTEM FOLLOWING LAKE MERIDIAN WATER DISTRICT & AWWA STANDARDS. IT SHALL BE THE CONTRACTORS RESPONSIBILITY TO PREVENT, AT ALL TIMES, THE CONTAMINATION OF THE NEW & EXISTING WATER MAINS WITH TRENCH WATER, DIRT, DEBRIS, OR OTHER FOREIGN MATERIAL.
2. A LAKE MERIDIAN WATER DISTRICT REPRESENTATIVE MUST BE PRESENT TO WITNESS THE FINAL CONNECTION(S) TO THE EXISTING WATER SYSTEM, TO TURN ON & FLUSH THE NEW WATER SYSTEM, & TO PLACE THE NEW WATER SYSTEM & APPURTENANCES INTO SERVICE.
3. TEMPORARY BLOCKING SHALL BE DI PIPE, ø TO MATCH MAIN SIZE. NOTCH BOTH ENDS TO PROVIDE CONTACT WITH MJ CAPS. ECOLOGY BLOCKS MAY BE USED IN LIEU OF DI PIPE, WITH APPROVAL OF DISTRICT. IF ECOLOGY BLOCKS ARE APPROVED, PROVIDE 6' MINIMUM SEPARATION BETWEEN EXISTING AND NEW WATER MAIN.

SEE STANDARD DETAIL 28A FOR ADDITIONAL DETAILS.

Lake Meridian WATER DISTRICT

SEPARATION FROM EXISTING WATER MAIN NOTES AND DETAILS

APPROVED:

DISTRICT — DATE 6/15/21

REVISION DATE: MAY 2021	DRAWN: MTM	CHECKED: BRL	SCALE: NTS

Gray & Osborne, Inc. CONSULTING ENGINEERS

28B

L:\Lake Meridian WD\District Documents and Standards\Standard Details\Water Details_2021\28.dwg, 6/17/2021 10:17 AM, MADISON MCCROSKY

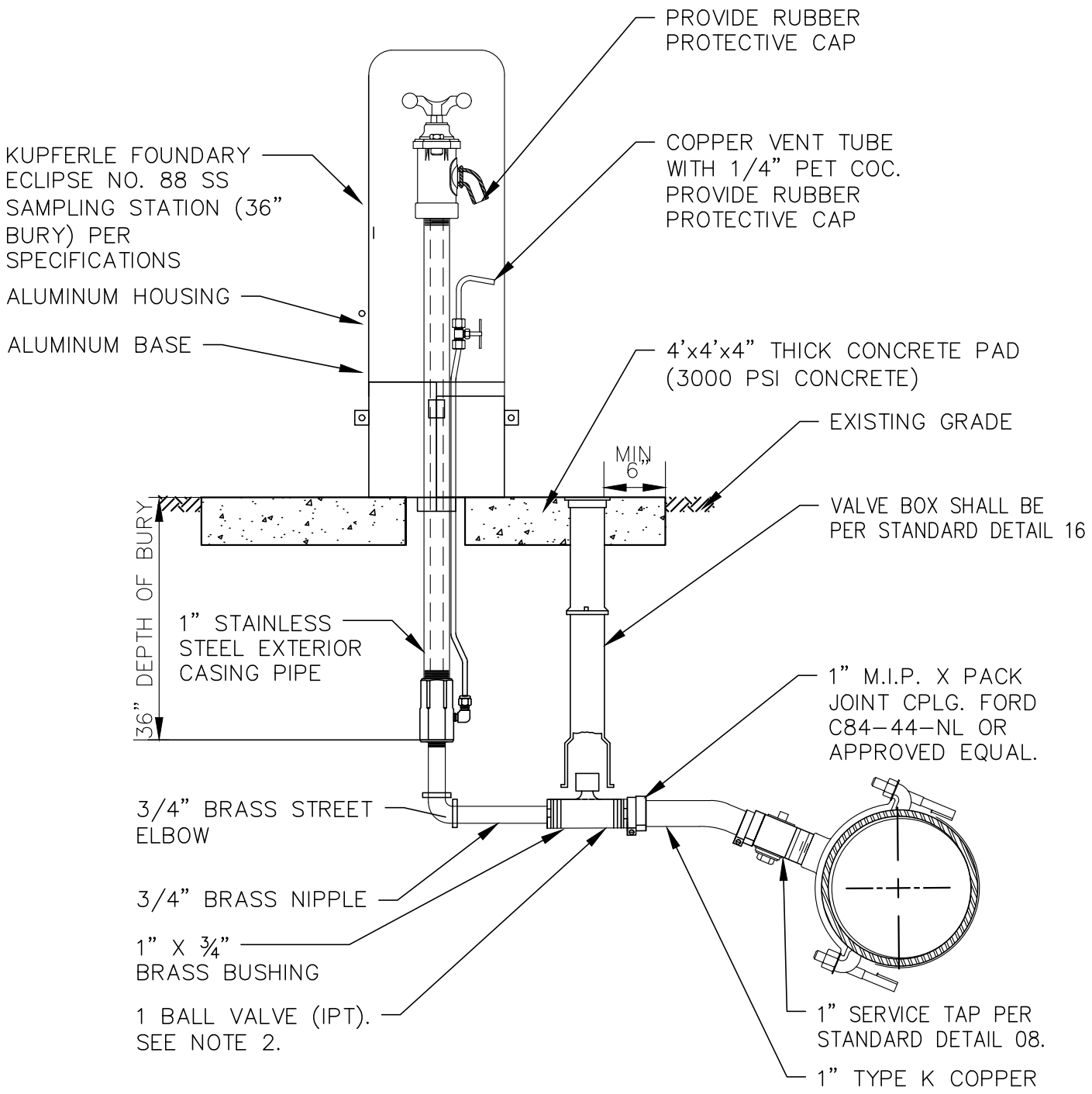

NOTES:

1. DO NOT BACKFILL UNTIL ALL FITTINGS HAVE BEEN INSPECTED BY THE DISTRICT.
2. BALL VALVE SHALL BE FORD B11-444-NL (1 FEMALE IRON PIPE THREADS BOTH ENDS BALL VALVE) WITH FORD QT67 2" GATE VALVE OPERATING NUT.
3. ALL FITTINGS SHALL BE LEAD FREE BRASS.

Lake Meridian WATER DISTRICT

SAMPLING STATION DETAIL

APPROVED:

DISTRICT — DATE 6/15/21

REVISION DATE: MAY 2021	DRAWN: MTM	CHECKED: BRL	SCALE: NTS

Gray & Osborne, Inc. CONSULTING ENGINEERS

L:\Lake Meridian WD\District Documents and Standards\Standard Details\Water Details_2021\29.dwg, 6/17/2021 10:17 AM, MADISON MCCROSKY

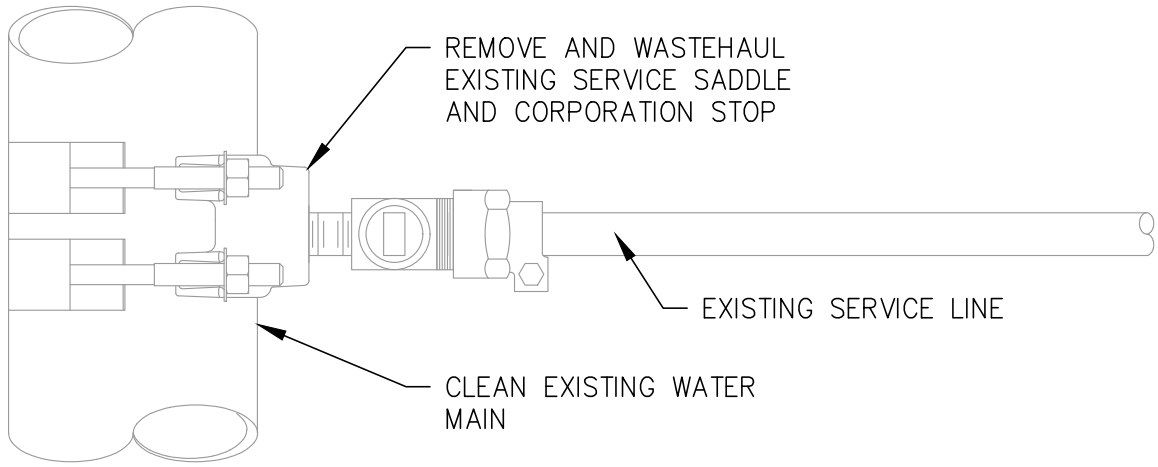

EXISTING

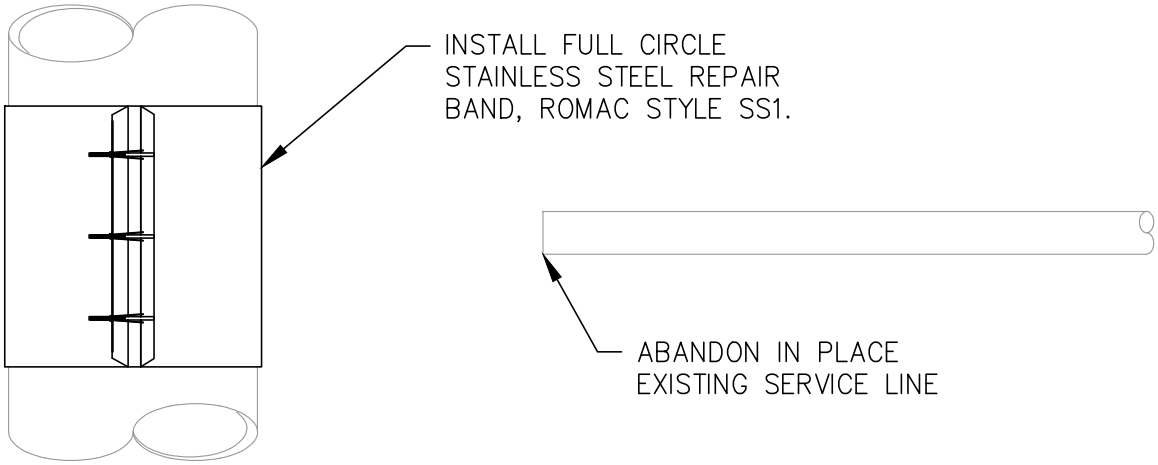

PROPOSED

NOTES:

1. WATER METER SETTER AND BOX SHALL BE REMOVED AND WASTEHAULED.

2. A WATER MAIN SHUT DOWN IS REQUIRED FOR SERVICE LINE ABANDONMENT. PROVIDE DISTRICT A MINIMUM 48 HOURS NOTICE PRIOR TO REQUIRING SHUT DOWN. SHUT DOWNS ARE LIMITED TO TUESDAY THROUGH THURSDAY.

Lake Meridian
WATER DISTRICT

EXISTING SERVICE LINE ABANDONMENT DETAIL

APPROVED:

DISTRICT — DATE 6/15/21

REVISION DATE: **MAY 2021**	DRAWN: **MTM**	CHECKED: **BRL**	SCALE: **NTS**

Gray & Osborne, Inc.
CONSULTING ENGINEERS

L:\Lake Meridian WD\District Documents and Standards\Standard Details\Water Details_2021\30.dwg, 6/17/2021 10:18 AM, MADISON MCCROSKY

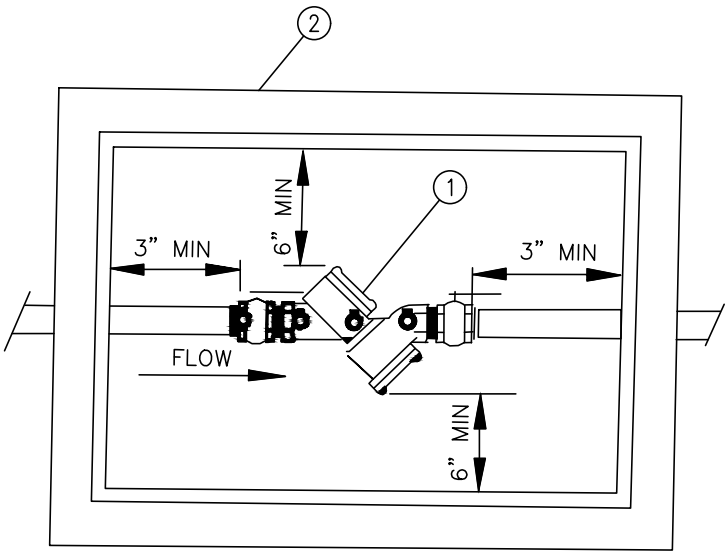

PLAN

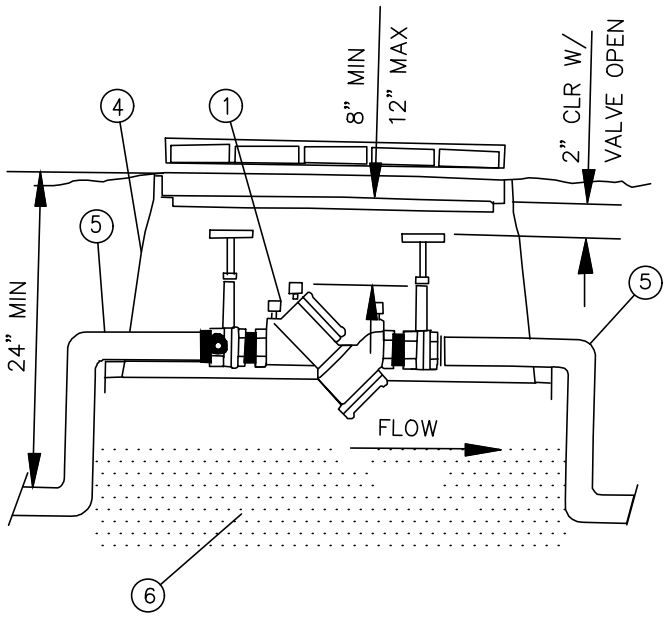

ELEVATION

LEGEND

1. DOUBLE CHECK VALVE ASSEMBLY SHALL BE ON THE LATEST APPROVED LIST APPROVED BY THE UNIVERSITY OF SOUTHERN CALIFORNIA.

2. BOX SHALL BE
   - 1" DCVA: OLD CASTLE/CARSON HW 1527BCF W/ 12" BODY
   - 1-1/2" AND 2" DCVA: OLD CASTLE/CARSON HW 1730BCF W/ 12" BODY

3. ALL ASSEMBLIES SHALL BE INSTALLED IN ACCORDANCE WITH WASHINGTON STATE DEPARTMENT OF HEALTH REQUIREMENTS.

4. A DAYLIGHT DRAIN SHALL BE PROVIDED THERE MUST BE A 4" MIN LAYER OF FREE DRAINING GRAVEL AT THE BOTTOM OF BOX.

5. ANGLES MAY BE IN OR OUT OF BOX SO LONG AS SUFFICIENT ROOM IS ALLOWED AT EACH END FOR VALVE OPERATOR AND DCVA REPAIR OR MAINTENANCE.

6. PROVIDE FREE DRAINING SOIL.

NOTES

1. ALL TEST COCKS MUST HAVE BRASS PLUGS.
2. TEST COCKS MUST FACE UP OR SIDEWAYS WHICH EVER IS MORE ACCESSIBLE

Lake Meridian
WATER DISTRICT

DOUBLE CHECK VALVE ASSEMBLY (2" AND SMALLER)

APPROVED:
DISTRICT — DATE 6/15/21

REVISION DATE: MAY 2021	DRAWN: MTM	CHECKED: BRL	SCALE: NTS

Gray & Osborne, Inc.
CONSULTING ENGINEERS

L:\Lake Meridian WD\District Documents and Standards\Standard Details\Water Details_2021\31.dwg, 6/17/2021 10:18 AM, MADISON MCCROSKY

Appendix G

Population Analysis

THIS PAGE INTENTIONALLY BLANK.

MEMORANDUM

Date: November 6, 2020

To: Lake Meridian Water District (Chris Hall, Brent Lewis)

From: BHC Consultants (Lauren Moore, Ron Dorn, Emma Van Orden, Dave Harms)

Subject: Population and Employment Projections, Lake Meridian Water District

1. Introduction

The Lake Meridian Water District, previously known as King County Water District 111, is updating its Water System Plan (WSP) to plan for future growth. This memorandum discusses population and employment projections for the water district area for the following years: 2019 (baseline), 2025, 2030, 2035, and 2040. Projections for additional years can be interpolated, if needed.

2. Residential Population Baseline

2.1 Datasets

Population and employment data were collected from the Office of Financial Management (OFM) and Puget Sound Regional Council (PSRC). To establish the boundaries where data was collected, a GIS shapefile was submitted to OFM and PSRC containing the Lake Meridian Water District Retail Water Service Area (RWSA) geography. Residential and employment population estimates were produced for the entire Lake Meridian RWSA.

2.2 Population Baseline

The residential population baseline year was 2019, the most recent year for which water demand data is available. The OFM Small Area Estimates Program (SAEP) prepares custom population estimates upon request. OFM provided a 2019 population estimate for the requested geography, recorded in Table 2-1. This estimate provides the population baseline against which forecasted growth can be compared.

Table 2-1
Baseline Population Estimates

	Area (ac.)	2019 Population Estimate
Lake Meridian Water District RWSA	4,550	21,988

The total baseline population is 21,988 people. OFM notes that an accuracy evaluation for this program is still in progress. Errors in accuracy may arise because OFM's estimates are developed year-by-year based

on the last Census. New Census data will be available in the spring of 2021. Until then, OFM's estimates are the best available.

3. Employment Baseline

The employment baseline year was 2019. Employment population projections were collected from 2019 Covered Employment data provided by PSRC and are summarized in Table 3-1.

Table 3-1
Baseline Employment Estimates

	2019 Employment Estimate
Lake Meridian Water District RWSA	3,503 employees

The total baseline employment is 3,503 employees. The total employment number captures employees covered by the Washington Unemployment Insurance Act (the Act) as well as those who are self-employed.

4. Forecast Datasets

Residential population and employment forecasts, estimated for the years 2020, 2025, 2030, 2035, and 2040, were obtained from PSRC using the Land Use Vision (LUV) regional model. According to PSRC's Growth Projection Users Guide, "The Land Use Vision (LUV) is a policy-directed growth projection out to 2040 for jurisdictions and other geographies. It represents the urban-focused growth pattern the region is planning for under VISION 2040 and local comprehensive plans and supports PSRC's long-range planning analyses and modeling. The current Land Use Vision was released in October 2017 and utilizes the 2015 macroeconomic forecast."

PSRC acknowledges that the LUV, while the most current forecasting tool available at PSRC, may occasionally return improbable or off-target forecasts for small geographies. This appears to be the case for the employment projections, which show a disconnect between the totals projected by the model, and current on-the-ground estimates. The employment discrepancy is discussed in greater detail below.

Table 4-1 shows the population forecast generated by PSRC's model. These totals include the population living in group quarters, a Census designation that includes dormitories, nursing facilities, military barracks, and other group living arrangements. The group quarters population is an estimate approximated to the geography by aggregating TAZ projections, and when summed with household population outputs from the model yield Total Population estimates & projections.

Table 4-1
Population Forecast Generated by PSRC

	2020	2025	2030	2035	2040
Lake Meridian Water District RWSA	21,979	22,999	23,591	23,964	24,370

The population forecast generated by PSRC begins with 21,979 people in 2020, which is similar to OFM's 2019 baseline of 21,988. The minor difference between the two (nine people) indicates compatibility between both sources of data.

Table 4-2 compares the data collected here to the projections that were employed in the previous draft 2017 Water System Plan. Differences between the two can plausibly be attributed to differences in methodology. At the time of the previous draft WSP, BHC was not able to obtain projections with the level of sophistication available in the current model. The population projections generated by PSRC in 2020 are reasonable for anticipated growth in the area.

Table 4-2
Population Forecast Compared to Previous Draft WSP

	2020	2025	2030	2035	2040
Previous Draft WSP	21,011	22,158	N/A	24,452	N/A
Current Projections	21,979	22,999	23,591	23,964	24,370
Difference	+968	+841	N/A	-488	N/A

Unlike population growth, however, the employment projections generated by the model do not appear to be consistent with anticipated growth. The results of the employment forecast analysis are summarized in Table 4-3.

Table 4-3
Employment Forecast Generated by PSRC

	2020	2025	2030	2035	2040
Lake Meridian Water District RWSA	2,497	2,499	2,553	2,668	2,783

PSRC's model returned an improbably low forecast: even by 2040, with 2,783 employees, the projection still falls short of the 2019 baseline of 3,503 employees by a considerable margin of 720. PSRC shared several potential explanations for this. One is that the model misread the District's job capacity. However, given that the Lake Meridian RWSA encompasses growing cities, the estimate of 3,503 employees seems more likely. It seems less plausible that employment would be suppressed in this region. This is also supported by a comparison to the previous draft WSP, which forecasted higher employment projections as shown in Table 4-4.

Table 4-4
Employment Forecast Compared to Previous Draft WSP

	2020	2025	2030	2035	2040
Previous Draft WSP	2,585	2,829	N/A	3,318	N/A
Current Projections	2,497	2,499	2,553	2,668	2,783
Difference	-88	-330	N/A	-650	N/A

Given this, a reasonable explanation might instead be that the model failed to project sufficient demand. Occasionally, PSRC forecasts generate growth forecasts that fall below market demand. This may be the case for Lake Meridian. From here, there are two potential approaches to adjusting the data to generate a forecast better aligned to expectations. One approach would be to assume that employment capacity has been met and will stall through 2040, and to flatten the curve in response. However, this seems unlikely for the reasons described above.

Otherwise, under an alternative assumption that job growth will continue and that the District planning area still has room to grow in terms of employment, then another approach would be to shift the curve by a reasonable amount. Table 4-5 shows an adjusted projection that uses 3,503 employees as a 2020 baseline and increases at the same rate as forecasted by the model in Table 4-3.

Table 4-5
Proposed Adjusted Employment Forecast

	2020	2025	2030	2035	2040
Lake Meridian Water District RWSA	3,503	3,506	3,582	3,743	3,904

Appendix H

Water Quality Test Results

THIS PAGE INTENTIONALLY BLANK.

Water District No. 111 of King County
Annual Water Quality Report

	MCLG	MCL	Level Found	Range Found	Violation	Date of Sample	Typical Source of Contaminant
KCWD No. 111 Contaminants							
Inorganic Contaminants							
Nitrate (ppm)	10	10	<0.2 ppm	<0.2 ppm	No	2015	Run off from fertilizer use; leaching from septic tanks, sewage
Copper (30 houses tested) ppm	1.3	AL=1.3	0.39 ppm	<0.02 - 0.39 ppm	No	2015	Corrosion of household plumbing systems, erosion of natural deposits.
Lead (30 houses tested) ppb	0	AL=.015	0.004 ppb	<0.001-0.004 ppb	No	2015	Corrosion of household plumbing systems, erosion of natural deposits.
Fluoride (substance) ppm	4	4	1.10 ppm	0.7-1.10 ppm	No	2015	Erosion of natural deposits; Water additive which promotes strong teeth; Discharge from fertilizer and aluminum factories
Disinfection Byproducts (ppb)							
Haloacetic Acids (HAA5) (ppb)	n/a	60	14.7 ppb	ND-14.7 ppb	No	2015	By-product of drinking water chlorination
Total Trihalomethanes (TCHM) (ppb)	n/a	80	30.6 ppb	1.3-30.6 ppb	No	2015	By-product of drinking water chlorination
Chlorine Residual (ppm)	4 (MDRL)	4 (MRDLG)	1.36 ppm	0.30-1.36 ppm	No	2015	Measure of disinfectant added to water
Microbiological Contaminants							
Total Coliform (positive samples/month)	0	Presence of coliform bacteria in 5% of monthly samples	0	NA	No	2015	Naturally present in the environment
City of Auburn Contaminants							
Inorganic Contaminants							
Fluoride (ppm)	4	4	0.90 ppm	0.10-0.90 ppm	No	2015	Discharge from metal degreasing sites and other factories
Turbidity, NTU	N/A	TT (5)	6.75 NTU	0.2-6.75 NTU	Yes	2015	Soil runoff
Arsenic (ppb)	N/A	10	2.0 ppb	ND-2.0 ppb	No	2015	Erosion of natural deposits; Runoff from orchards; Runoff from glass and electronics production wastes
Nitrate (ppm)	10	10	3.5 ppm	ND-3.5 ppm	No	2015	Run off from fertilizer use; leaching from septic tanks, sewage
Disinfection Byproducts (ppb)							
Haloacetic Acids (HAA5) (ppb)	n/a	60	9.8 ppb	ND-9.8 ppb	No	2015	By-product of drinking water chlorination
Total Trihalomethanes (TCHM) (ppb)	n/a	80	17.7 ppb	0.4-17.7 ppb	No	2015	By-product of drinking water chlorination
Other Monitored Substance							
Sulfate (ppm)	N/A	250	15 ppm	6-15 PPM	No	2015	Naturally present in the environment.
Chorine Residual (ppm)	4	4	1.43 ppm	0.05-1.43 ppm	No	2015	Measure of disinfectant added to water.
Total Coliform (positive samples/month)	0	Presence of coliform bacteria in 5% of monthly samples	0	One of the samples collected on 9/8/2014 was positive. All required repeat samples were negative.	No	2015	Naturally present in the environment
Vanadium (ppb)	NA	0.2 ppb	4 ppb	0.53-4.0 ppb		2015	Vanadium occurs naturally in about 65 different minerals and in fossil fuel deposits.
Strontium (ppb)	NA	0.3 ppb	110 ppb	11-110 ppb		2015	Strontium commonly occurs in nature.
Chromium (ppb)	NA	0.3 ppb	0.56 ppb	0.21-0.56 ppb		2015	Chromium is abundant element in Earth's crust
Chromium-6(ppb)	NA	0.2 ppb	0.46 ppb	0.05-0.46 ppb		2015	It occurs naturally in various types of rock, soil, ore and volcanic dust as well as in plants, animals and humans.
Chlorate(ppb)	NA	20 ppb	100 ppb	25-100 ppb		2015	Present in Nature.
Testosterone(ppb)	NA	0.0001 ppb	0.00053 ppb	0.00053 ppb		2015	Testosterone is a steroid hormone from the androgen group and is found in humans and other vertebrates.

Water District No. 111 of King County
Annual Water Quality Report

	MCLG	MCL	Level Found	Range Found	Violation	Date of Sample	Typical Source of Contaminant
Covington Water District Contaminants							
Inorganic Contaminants							
Nitrate (ppm)	10	10	0.7	0.7	No	2015	Run off from fertilizer use; leaching from septic tanks, sewage
Copper (30 houses tested) ppm	1.3	AL=1.3	0.35 ppb	0.35 ppb	No	2013	Corrosion of household plumbing systems, erosion of natural deposits.
Lead (30 houses tested) ppb	0	AL=.015	10 ppb	10 ppb	No	2013	Corrosion of household plumbing systems, erosion of natural deposits.
Fluoride (substance) ppm	4	4	1.5 ppm	0.6-1.5 ppm	No	2015	Erosion of natural deposits; Water additive which promotes strong teeth; Discharge from fertilizer and aluminum factories
Disinfection Byproducts (ppb)							
Haloacetic Acids (HAA5) (ppb)	n/a	60	37.33 ppb	7.38-37.33 ppb	No	2015	By-product of drinking water chlorination
Total Trihalomethanes (TCHM) (ppb)	n/a	80	34.75 ppb	11.13-34.75 ppb	No	2015	By-product of drinking water chlorination
Chlorine Residual (ppm)	4 (MDRL)	4 (MRDLG)	1.15 ppm	0.01-1.15 ppm	No	2015	Measure of disinfectant added to water
Microbiological Contaminants							
Total Coliform (positive samples/month)	0	Presence of coliform bacteria in 5% of monthly samples	0	NA	No	2015	Naturally present in the environment
Nickel (PPB)	100	100	3 ppb	3 ppb	No	2015	Natural Erosion
Chlorate (ppb)	NA	NA	120 ppb	20-120 ppb	NA	2015	Disinfection Interaction
Strontium (ppb)	NA	NA	71 ppb	12-71 ppb	NA	2015	Natural Erosion
Vanadium (ppb)	NA	NA	0.66 ppb	0.21-0.66 ppb	NA	2015	Natural Erosion
Hexavalent Chromium	NA	NA	0.13 ppb	0.05-0.13 ppb	NA	2015	Natural Erosion

Unit Descriptions	
Term	**Definition**
ppm	ppm: parts per million, or milligrams per liter (mg/L)
ppb	ppb: parts per billion, or micrograms per liter (µg/L)
positive samples/month	positive samples/month: Number of samples taken monthly that were found to be positive
NA	NA: Not applicable
NR	NR: Monitoring not required, but recommended.
Important Drinking Water Definitions	
MCLG	MCLG: Maximum Contaminant Level Goal: The level of a contaminant in drinking water below which there is no know expected risk to health. MCLGs allow for a margin of safety.
MCL	MCL: Maximum Contaminant Level: The highest level of a contaminant that is allowed in drinking water. MCLs are set as close to the MCLGs as feasible using the best available treatment technology.
TT	TT: Treatment Technique: A required process intended to reduce the level of a contaminant in drinking water.
AL	AL: Action Level: The concentration of a contaminant which, if exceeded, triggers treatment or other requirements which a water system must follow.
MRDLG	MRDLG: Maximum residual disinfection level goal. The level of a drinking water disinfectant below which there is no known or expected risk to health. MRDLGs do not reflect the benefits of the use of disinfectants to control microbial contaminants.
MRDL	MRDL: Maximum residual disinfectant level. The highest level of a disinfectant allowed in drinking water. There is convincing evidence that addition of a disinfectant is necessary for control of microbial contaminants.

Water District No. 111 of King County
Annual Water Quality Report

	MCLG	MCL	Level Found	Range Found	Violation	Date of Sample	Typical Source of Contaminant
KCWD No. 111 Contaminants							
Inorganic Contaminants							
Nitrate (ppm)	10	10	<0.2 ppm	<0.2 ppm	No	2016	Run off from fertilizer use; leaching from septic tanks, sewage
Copper (30 houses tested) ppm	1.3	AL=1.3	0.39 ppm	<0.02 - 0.39 ppm	No	2015	Corrosion of household plumbing systems; erosion of natural deposits
Lead (30 houses tested) ppb	0	AL=.015	0.004 ppb	<0.001-0.004 ppb	No	2015	Corrosion of household plumbing systems; erosion of natural deposits
Fluoride (substance) ppm	4	4	1.10 ppm	0.5-0.7ppm	No	2016	Erosion of natural deposits; Water additive which promotes strong teeth; Discharge from fertilizer and aluminum factories
Disinfection Byproducts (ppb)							
Haloacetic Acids (HAA5) (ppb)	n/a	60	13.05 ppb	ND-14.2 ppb	No	2016	By-product of drinking water chlorination
Total Trihalomethanes (TCHM) (ppb)	n/a	80	27.6	2.3-28.1 ppb	No	2016	By-product of drinking water chlorination
Chlorine Residual (ppm)	4 (MDRL)	4 (MRDLG)	1.36 ppm	0.30-1.36 ppm	No	2016	Measure of disinfectant added to water
Microbiological Contaminants							
Total Coliform (positive samples/month)	0	Presence of coliform bacteria in 5% of monthly samples	0	NA	No	2016	Naturally present in the environment
City of Auburn Contaminants							
Inorganic Contaminants							
Fluoride (ppm)	4	4	0.2 ppm	0-0.2 ppm	No	2016	Discharge from metal degreasing sites and other factories
Turbidity, NTU	N/A	TT (5)	0.2 NTU	0-0.2 NTU	no	2016	Soil runoff
Arsenic (ppm)	N/A	.01	.001 ppm	ND-.001 ppm	No	2016	Erosion of natural deposits; Runoff from orchards; Runoff from glass and electronics production wastes
Nitrate (ppm)	10	10	2.4 ppm	1-2.4 ppm	No	2016	Run off from fertilizer use; leaching from septic tanks, sewage
Disinfection Byproducts (ppb)							
Haloacetic Acids (HAA5) (ppb)	n/a	60	6 ppb	ND-6 ppb	No	2016	By-product of drinking water chlorination
Total Trihalomethanes (TCHM) (ppb)	n/a	80	23.1 ppb	2.2-23.1 ppb	No	2016	By-product of drinking water chlorination
Other Monitored Substance							
Sulfate (ppm)	N/A	250	12 ppm	ND-12 PPM	No	2016	Naturally present in the environment
Chorine Residual (ppm)	4	4	.64 ppm	0.37-0.89 ppm	No	2016	Measure of disinfectant added to water
Total Coliform (positive samples/month)	0	Presence of coliform bacteria in 5% of monthly samples	1	One of the samples collected on 11/2/2016 was positive. All required repeat samples were negative.	No	2016	Naturally present in the environment
Vanadium (ppb)	NA	0.2 ppb	4 ppb	0.53-4.0 ppb		2015	Vanadium occurs naturally in about 65 different minerals and in fossil fuel deposits
Strontium (ppb)	NA	0.3 ppb	110 ppb	11-110 ppb		2015	Strontium commonly occurs in nature
Chromium (ppb)	NA	0.3 ppb	0.56 ppb	0.21-0.56 ppb		2015	Chromium is an abundant element in the Earth's crust
Chromium-6(ppb)	NA	0.2 ppb	0.46 ppb	0.05-0.46 ppb		2015	Occurs naturally in various types of rock, soil, ore and volcanic dust as well as in plants, animals and humans
Chlorate(ppb)	NA	20 ppb	100 ppb	25-100 ppb		2015	Present in Nature
Testosterone(ppb)	NA	0.0001 ppb	0.00053 ppb	0.00053 ppb		2015	Testosterone is a steroid hormone from the androgen group and is found in humans and other vertebrates

Water District No. 111 of King County
Annual Water Quality Report

	MCLG	MCL	Level Found	Range Found	Violation	Date of Sample	Typical Source of Contaminant
Covington Water District Contaminants							
Inorganic Contaminants							
Nitrate (ppm)	10	10	0.3 ppm	0-0.3 ppm	No	2016	Run off from fertilizer use; leaching from septic tanks, sewage
Copper (30 houses tested) ppm	1.3	AL=15 ppb	1.3 ppm	0.14 ppm	No	2016	Corrosion of household plumbing systems, erosion of natural deposits
Lead (30 houses tested) ppb	0	AL=15ppb	0 ppb	2 ppb	No	2016	Corrosion of household plumbing systems, erosion of natural deposits
Fluoride (substance) ppm	4	4	.67 ppm	0.67-1.5 ppm	No	2016	Erosion of natural deposits; Water additive which promotes strong teeth; Discharge from fertilizer and aluminum factories
Disinfection Byproducts (ppb)							
Haloacetic Acids (HAA5) (ppb)	n/a	60	16.6 ppb	5.08-15.38 ppb	No	2016	By-product of drinking water chlorination
Total Trihalomethanes (TCHM) (ppb)	n/a	80	31.9 ppb	7.2-23.98 ppb	No	2016	By-product of drinking water chlorination
Chlorine Residual (ppm)	4 (MDRL)	4 (MRDLG)	1.34 ppm	0.05-1.34 ppm	No	2016	Measure of disinfectant added to water
Microbiological Contaminants							
Total Coliform (positive samples/month)	0	Presence of coliform bacteria in 5% of monthly samples	1 1 of 604 samples taken All repeat samples were negative	NA	No	2016	Naturally present in the environment
Chlorate (ppb)	NA	NA	120 ppb	20-120 ppb	NA	2015	Disinfection Interaction
Strontium (ppb)	NA	NA	71 ppb	12-71 ppb	NA	2015	Natural Erosion
Vanadium (ppb)	NA	NA	0.66 ppb	0.21-0.66 ppb	NA	2015	Natural Erosion
Hexavalent Chromium	NA	NA	0.13 ppb	0.05-0.13 ppb	NA	2015	Natural Erosion

Unit Descriptions	
Term	**Definition**
ppm	ppm: parts per million, or milligrams per liter (mg/L)
ppb	ppb: parts per billion, or micrograms per liter (µg/L)
positive samples/month	positive samples/month: Number of samples taken monthly that were found to be positive
NA	NA: Not applicable
NR	NR: Monitoring not required, but recommended
Important Drinking Water Definitions	
MCLG	MCLG: Maximum Contaminant Level Goal: The level of a contaminant in drinking water below which there is no known expected risk to health. MCLGs allow for a margin of safety
MCL	MCL: Maximum Contaminant Level: The highest level of a contaminant that is allowed in drinking water. MCLs are set as close to the MCLGs as feasible using the best available treatment technology
TT	TT: Treatment Technique: A required process intended to reduce the level of a contaminant in drinking water
AL	AL: Action Level: The concentration of a contaminant which, if exceeded, triggers treatment or other requirements which a water system must follow
MRDLG	MRDLG: Maximum residual disinfection level goal. The level of a drinking water disinfectant below which there is no known or expected risk to health. MRDLGs do not reflect the benefits of the use of disinfectants to control microbial contaminants
MRDL	MRDL: Maximum residual disinfectant level. The highest level of a disinfectant allowed in drinking water. There is convincing evidence that addition of a disinfectant is necessary for control of microbial contaminants

Water District No. 111 of King County
Annual Water Quality Report

	MCLG	MCL	Level Found	Range Found	Violation	Date of Sample	Typical Source of Contaminant
KCWD No. 111 Contaminants							
Inorganic Contaminants							
Nitrate (ppm)	10	10	<0.2 ppm	<0.2 ppm	No	2017	Run off from fertilizer use; leaching from septic tanks, sewage
Copper (30 houses tested) ppm	1.3	AL=1.3	0.39 ppm	<0.02 - 0.39 ppm	No	2015	Corrosion of household plumbing systems; erosion of natural deposits
Lead (30 houses tested) ppb	0	AL=.015	0.004 ppb	<0.001-0.004 ppb	No	2015	Corrosion of household plumbing systems; erosion of natural deposits
Fluoride (substance) ppm	4	4	0.89 ppm	0.5-0.89ppm	No	2017	Erosion of natural deposits; Water additive which promotes strong teeth; Discharge from fertilizer and aluminum factories
Disinfection Byproducts (ppb)							
Haloacetic Acids (HAA5) (ppb)	n/a	60	16.2 ppb	13.5-16.2 ppb	No	2017	By-product of drinking water chlorination
Total Trihalomethanes (TCHM) (ppb)	n/a	80	34.2 ppb	32.6-34.2 ppb	No	2017	By-product of drinking water chlorination
Chlorine Residual (ppm)	4 (MDRL)	4 (MRDLG)	1.41 ppm	0.34-1.2 ppm	No	2017	Measure of disinfectant added to water
Microbiological Contaminants							
Total Coliform (positive samples/month)	0	Presence of coliform bacteria in 5% of monthly samples	0	NA	No	2017	Naturally present in the environment
City of Auburn Contaminants							
Inorganic Contaminants							
Fluoride (ppm)	4	4	0.2 ppm	0-0.2 ppm	No	2017	Erosion of natural deposits
Turbidity, NTU	N/A	TT (5)	0.1 NTU	0-0.1 NTU	No	2017	Soil runoff
Arsenic (ppm)	N/A	.01	.002 ppm	.001-.002 ppm	No	2017	Erosion of natural deposits; Runoff from orchards; Runoff from glass and electronics production wastes
Nitrate (ppm)	10	10	3.4 ppm	0.4-3.4 ppm	No	2017	Run off from fertilizer use; leaching from septic tanks, sewage
Disinfection Byproducts (ppb)							
Haloacetic Acids (HAA5) (ppb)	n/a	60	6.9 ppb	1.1-6.9 ppb	No	2017	By-product of drinking water chlorination
Total Trihalomethanes (TCHM) (ppb)	n/a	80	15.0 ppb	1.7-15.0 ppb	No	2017	By-product of drinking water chlorination
Other Monitored Substances							
Sulfate (ppm)	N/A	250	15 ppm	6-15 ppm	No	2017	Naturally present in the environment
Chorine Residual (ppm)	4	4	.79 ppm	0.32-0.79 ppm	No	2017	Measure of disinfectant added to water
Total Coliform (positive samples/month)	0	Presence of coliform bacteria in 5% of monthly samples	0	0	No	2017	Naturally present in the environment
Chromium (ppb)	NA	100 ppb	.007 ppb	0-.007ppb		2017	Chromium is an abundant element in the Earth's crust

Water District No. 111 of King County
Annual Water Quality Report

	MCLG	MCL	Level Found	Range Found	Violation	Date of Sample	Typical Source of Contaminant
Covington Water District Contaminants							
Inorganic Contaminants							
Nitrate (ppm)	10	10	0.8 ppm	0-0.8 ppm	No	2017	Run off from fertilizer use; leaching from septic tanks, sewage
Copper (30 houses tested) ppm	1.3	AL=15 ppb	1.3 ppm	0.14 ppm	No	2016	Corrosion of household plumbing systems, erosion of natural deposits
Lead (30 houses tested) ppb	0	AL=15ppb	0 ppb	2 ppb	No	2016	Corrosion of household plumbing systems, erosion of natural deposits
Fluoride (substance) ppm	4	4	1.35 ppm	0.15-1.35 ppm	No	2017	Erosion of natural deposits; Water additive which promotes strong teeth; Discharge from fertilizer and aluminum factories
Disinfection Byproducts (ppb)							
Haloacetic Acids (HAA5) (ppb)	n/a	60	14.7 ppb	5.9-13.23 ppb	No	2017	By-product of drinking water chlorination
Total Trihalomethanes (TCHM) (ppb)	n/a	80	28.9 ppb	8.33-23.93 ppb	No	2017	By-product of drinking water chlorination
Chlorine Residual (ppm)	4 (MRDL)	4 (MRDLG)	1.35 ppm	0.15-1.35 ppm	No	2017	Measure of disinfectant added to water
Microbiological Contaminants							
Total Coliform (positive samples/month)	0	Presence of coliform bacteria in 5% of monthly samples	0	0	No	2017	Naturally present in the environment
Chlorate (ppb)	NA	NA	120 ppb	20-120 ppb	NA	2015	Disinfection Interaction
Strontium (ppb)	NA	NA	71 ppb	12-71 ppb	NA	2015	Natural Erosion
Vanadium (ppb)	NA	NA	0.66 ppb	0.21-0.66 ppb	NA	2015	Natural Erosion
Hexavalent Chromium	NA	NA	0.13 ppb	0.05-0.13 ppb	NA	2015	Natural Erosion

Unit Descriptions	
Term	**Definition**
ppm	ppm: parts per million, or milligrams per liter (mg/L)
ppb	ppb: parts per billion, or micrograms per liter (µg/L)
positive samples/month	positive samples/month: Number of samples taken monthly that were found to be positive
NA	NA: Not applicable
NR	NR: Monitoring not required, but recommended
Important Drinking Water Definitions	
MCLG	MCLG: Maximum Contaminant Level Goal: The level of a contaminant in drinking water below which there is no known expected risk to health. MCLGs allow for a margin of safety
MCL	MCL: Maximum Contaminant Level: The highest level of a contaminant that is allowed in drinking water. MCLs are set as close to the MCLGs as feasible using the best available treatment technology
TT	TT: Treatment Technique: A required process intended to reduce the level of a contaminant in drinking water
AL	AL: Action Level: The concentration of a contaminant which, if exceeded, triggers treatment or other requirements which a water system must follow
MRDLG	MRDLG: Maximum residual disinfection level goal. The level of a drinking water disinfectant below which there is no known or expected risk to health. MRDLGs do not reflect the benefits of the use of disinfectants to control microbial contaminants
MRDL	MRDL: Maximum residual disinfectant level. The highest level of a disinfectant allowed in drinking water. There is convincing evidence that addition of a disinfectant is necessary for control of microbial contaminants

Lake Meridian
WATER DISTRICT

2018 Lake Meridian Water District Testing Results

Regulated Substance	MCLG	MCL	Range or Level Detected	Sample Year	Typical Source	Clean Water?
Nitrate ppm	10	10	0.29	2018	Runoff from fertilizer use; leaching from septic tank, sewage	YES
Chlorine ppm	NA	MRDL = 4	0.35 to 1.35	2018	Treatment Additive for Disinfection	YES
Flouride ppm	4	4	0.79	2018	Erosion of Natural Deposits; Water Additive which Promotes Strong Teeth	YES
Disinfection By-Products						
Haloacetic Acids (HAA5s) ppb	NA	60	14.5	2018	By-Product of Drinking Water Chlorination	YES
Total Trihalomethanes (TTHMs) ppb	NA	80	34.04	2018	By-Product of Drinking Water Chlorination	YES
Microbiological Contaminants						
Total Coliforms (positive samples per month)	0	5.0% of 22 samples per month	3 of 264 samples taken	6/19/2018 7/7/2018 8/27/2018	Naturally Present in the Environment	YES
EPA Unregulated Contaminants Monitoring (UCMR3)						
Chlorate ppb	NA	NA	120	2015	Disinfection interaction	YES
Strontium ppb	NA	NA	71	2015	Natural Erosion	YES
Vanadium ppb	NA	NA	0.66	2015	Natural Erosion	YES
Hexavalent Chromium ppb	NA	NA	0.13	2015	Natural Erosion	YES
Regulated at the Customer's Tap						
Copper ppm	1.3	AL = 1.3	0.094	2018	Corrosion of household plumbing systems; erosion of natural deposits	YES
Lead ppm	0	AL = 0.015	<0.001	2018	Corrosion of household plumbing systems; erosion of natural deposits	YES

2018 Covington Water District Testing Results

Regulated Substance	MCLG	MCL	Range or Level Detected	Sample Year	Typical Source	Clean Water?
Nitrate ppm	10	10	0.53	2018	Runoff from fertilizer use; leaching from septic tank, sewage	YES
Chlorine ppm	NA	MRDL = 4	0.13 to 1.37	2018	Treatment Additive for Disinfection	YES
Flouride ppm	4	4	0.53 to 0.90	2018	Erosion of Natural Deposits; Water Additive which Promotes Strong Teeth	YES
Disinfection By-Products						
Haloacetic Acids (HAA5s) ppb	NA	60	14.10	2018	By-Product of Drinking Water Chlorination	YES
Total Trihalomethanes (TTHMs) ppb	NA	80	25.23	2018	By-Product of Drinking Water Chlorination	YES
Microbiological Contaminants						
Total Coliforms (positive samples per month)	0	5.0% of 50 samples per month	0 of 600 samples taken	2018	Naturally Present in the Environment	YES
EPA Unregulated Contaminants Monitoring (UCMR3)						
Chlorate ppb	NA	NA	20 to 120	2015	Disinfection interaction	YES
Strontium ppb	NA	NA	12 to 71	2015	Natural Erosion	YES
Vanadium ppb	NA	NA	0.21 to 0.66	2015	Natural Erosion	YES
Hexavalent Chromium ppb	NA	NA	0.05 to 0.13	2015	Natural Erosion	YES
Regulated at the Customer's Tap						
Copper ppm	1.3	AL = 1.3	0.14	2016	Corrosion of household plumbing systems; erosion of natural deposits	YES
Lead ppm	0	AL = 0.015	0.002	2016	Corrosion of household plumbing systems; erosion of natural deposits	YES

Lake Meridian
WATER DISTRICT

2019 Lake Meridian Water District Testing Results

Regulated Substance	MCLG	MCL	Range or Level Detected	Sample Year	Typical Source	Clean Water?
Nitrate ppm	10	10	0.20	2019	Runoff from fertilizer use; leaching from septic tank, sewage	YES
Chlorine ppm	NA	MRDL = 4	0.39 to 1.55	2019	Treatment Additive for Disinfection	YES
Flouride ppm	4	4	0.67	2019	Erosion of Natural Deposits; Water Additive which Promotes Strong Teeth	YES
Disinfection By-Products						
Haloacetic Acids (HAA5s) ppb	NA	60	11.47	2019	By-Product of Drinking Water Chlorination	YES
Total Trihalomethanes (TTHMs) ppb	NA	80	31.55	2019	By-Product of Drinking Water Chlorination	YES
Microbiological Contaminants						
Total Coliforms (positive samples per month)	0	5.0% of 22 samples per month	0 of 264 samples taken	2019	Naturally Present in the Environment	YES
EPA Unregulated Contaminants Monitoring (UCMR3)						
Chlorate ppb	NA	NA	120	2015	Disinfection interaction	YES
Strontium ppb	NA	NA	71	2015	Natural Erosion	YES
Vanadium ppb	NA	NA	0.86	2015	Natural Erosion	YES
Hexavalent Chromium ppb	NA	NA	0.13	2015	Natural Erosion	YES
Regulated at the Customer's Tap						
Copper ppm	1.3	AL = 1.3	0.094	2018	Corrosion of household plumbing systems; erosion of natural deposits	YES
Lead ppm	0	AL = 0.015	<0.001	2018	Corrosion of household plumbing systems; erosion of natural deposits	YES

2019 Covington Water District Testing Results

Regulated Substance	MCLG	MCL	Range or Level Detected	Sample Year	Typical Source	Clean Water?
Nitrate ppm	10	10	Highest - 0.49	2019	Runoff from fertilizer use; leaching from septic tank, sewage	YES
Chlorine ppm	NA	MRDL = 4	0.09 to 1.82	2019	Treatment Additive for Disinfection	YES
Flouride ppm	4	4	Highest - 0.8 Average - 0.67	2019	Erosion of Natural Deposits; Water Additive which Promotes Strong Teeth	YES
Disinfection By-Products						
Haloacetic Acids (HAA5s) ppb	NA	60	Highest - 18.54 LRAA 15.73 to 14.64	2019	By-Product of Drinking Water Chlorination	YES
Total Trihalomethanes (TTHMs) ppb	NA	80	Highest - 29.28 LRAA 19.08 to 21.79	2019	By-Product of Drinking Water Chlorination	YES
Microbiological Contaminants						
Total Coliforms (positive samples per month)	0	5.0% of 90 samples per month	0 of 800 samples taken	2019	Naturally Present in the Environment	YES
EPA Unregulated Contaminants Monitoring (UCMR3)						
Chlorate ppb	NA	NA	20 to 120	2015	Disinfection interaction	YES
Strontium ppb	NA	NA	12 to 71	2015	Natural Erosion	YES
Vanadium ppb	NA	NA	0.31 to 0.86	2015	Natural Erosion	YES
Hexavalent Chromium ppb	NA	NA	0.05 to 0.13	2015	Natural Erosion	YES
Regulated at the Customer's Tap						
Copper ppm	1.3	AL = 1.3 ppm	.199 (Amount detected 90%)	2019	Corrosion of household plumbing systems; erosion of natural deposits	YES
Lead ppb	0	AL = 15 ppb	2.10 (Amount detected 90%)	2019	Corrosion of household plumbing systems; erosion of natural deposits	YES

Unit Descriptions and Definitions

Term	Definition
ppm	Parts per million or milligrams per liter (mg/L)
ppb	Parts per billion or micrograms per liter (Ug/L)
NA	Not applicable
MCLG	Maximum Contaminant Level Goal: The level of a contaminant in drinking water below which there is no known expected risk to health. MCLGs allow for a margin of safety.
MCL	Maximum Contaminant Level: The highest level of a contaminant that is allowed in drinking water. MCLs are set as close to the MCLGs as feasible using the best available treatment technology.
AL	Action Level: The concentration of a contaminant which, if exceeded, triggers treatment or other requirements which a water system must follow.
MRDL	Maximum Residual Disinfectant Level: The highest level of a disinfectant allowed in drinking water. There is convincing evidence that addition of a disinfectant is necessary for control of microbial contaminants.

Testing to Protect Your Family

If present, elevated levels of lead can cause serious health problems, especially for pregnant women and young children. Lead in drinking water is primarily from components and materials associated with service lines and home plumbing. Lake Meridian Water District is responsible for providing high quality drinking water, but cannot control the variety of materials used in various plumbing components.

If your water has been sitting for several hours, you can minimize the potential for lead exposure by flushing your tap for 30 seconds to 2 minutes before using water for drinking or cooking. If you are concerned about lead in your water, you may wish to have your water tested. Information on lead in drinking water, testing methods, and steps you can take to minimize exposure is available from the Safe Drinking Water Hotline 1-800-426-4791 or at http://www.epa.gov/safewater/lead.

Have Questions? Let us know...

Please contact the District office at (253) 631-3770 or visit our website at **LakeMeridianWater.com**.

Location:
Lake Meridian Water District
27224 144th Avenue Southeast
Kent, Washington 98042

THIS PAGE INTENTIONALLY BLANK.

Appendix I

Coliform Monitoring Plan 2019

THIS PAGE INTENTIONALLY BLANK.

Routine Coliform Monitoring Plan for: Lake Meridian Water District

A. System Information

Water System Name: Lake Meridian Water District 27224 144th Ave SE Kent, Wa 98042	County: King	System I.D. Number: 41900B
Attach copy of current WFI		
Number of Routine Samples Required Monthly by Regulation: 25	Number of Sample Sites Needed to Represent the Distribution System: 27	

Sources:

DOH Source #	Source Name	Well Depth
S02 (Offline)	Well #1	256'
S03 (Offline)	Well #2	68'
S04	Well #3	85'
S05 (Offline)	Well #4	170'
S06	Well #5	373'
S07	Well #6	397'
S08	Well #9	443'

Storage: Three storage reservoirs which include a 2MG standpipe, a 2MG concrete tank and a 150,000 gallon elevated tank.

Treatment: A treatment facility is located with each of the four sources being used. (Wells #3, #5, #6 and #9) Treatment includes Atec filters for iron and manganese removal, chlorine generating systems and sodium fluoride injection systems. Wells #1, #2, and #4 are not in operation at the present time.

Covington Water Wholesale intertie: Water is received 24/hrs a day 365 days a year with a flow rate of between .75 and 1.2 MGD depending on seasonal system demand.

Pressure stations: We have one pressure zone which is dictated by the water level of the standpipe tank as well as the elevated tank. Hydraulic conditions will change regularly based on sources in operation as well as the water levels in the storage tanks.

Population served: approximately 25,887 as of 9/14/2022

Total number of residential service connections: 7,177 as of 9/14/2022

ERU: 7,714 as of 9/14/2022

B. Routine Monthly Samples

Routine sampling required by regulation: 25 samples per month

27 routine samples are taken each month to adequately cover the distribution system.

Location/Address for Routine Sample Sites	Location/Address for Repeat Sample Sites
X1. 150th & 255th S.S.	1-1. 25420 150th Pl
	1-2. 25514 150th Pl
X2. 250th & 135th MVCC S.S.	2-1. 13449 250th Ct
	2-2. 13531 250th St
X3. 13904 241st St	3-1. 13842 SE 241st St
	3-2. 13921 SE 241st St
X4. 27530 146th Ave SS	4-1. 27534 146th Ave
	4-2. 14517 275th St
X5. 24918 129th Pl S.S.	5-1. 12928 SE 250th St
	5-2. 24902 129th Pl
X6. 26034 142nd Ave S.S.	6-1. 26204 142nd Ave
	6-2. 26005 142nd Ave
X7. 15400 278th St S.S.	7-1. 15215 SE 278th St
	7-2. 15422 SE 278th St
X8. 14116 243rd MVCC S.S.	8-1. 14204 243rd St
	8-2. 14103 243rd St

X9. 128th & 299th S.S.	9-1. 12829 SE 299th St
	9-2. 12850 SE 299th St
X10. North Ridgeview S.S.	10-1. 12418 SE 286th St
	10-2. 12448 SE 286th St
X11. 25423 123rd Pl S.S.	11-1. 25423 123rd pl
	11-2. 12326 255th St
X12. 14041 283rd Pl S.S.	12-1. 14057 283rd Pl
	12-2. 14016 283rd Pl
X13. 24800 145th Pl S.S.	13-1. 24625 145th Pl
	13-2. 24800 145th Ln
X14. 128th & 261st S.S.	14-1. 26125 129th Ave
	14-2. 12730 SE 261st Pl
X15. 12648 282nd St. S.S.	15-1. 12641 SE 282nd Way
	15-2. 12730 SE 282nd Way
X16. 14452 264th St S.S.	16-1. 14436 SE 264th St
	16-2. 14522 SE 264th St

X17. 25506 142nd Ave	17-1. 25420 142nd Ave
	17-2. 14205 SE 255th Pl
X18. 127th & 268th S.S.	18-1. 26630 127th Ave
	18-2. 12724 268th St

X19. 27708 128th Pl	19-1. 27714 128th Pl
	19-2. 27639 128th Pl
X20. 12822 SE 241st St S.S.	20-1. 24046 129th Ct
	20-2. 24028 129th Ct
X21. 27401 137th Ave S.S.	21-1. 27339 137th Ave
	21-2. 27416 137th Ave
X22. 157th & 255th S.S.	22-1. 25506 157th Ave
	22-2. 25514 157th Ave
X23.	23-1.
	23-2.
X24.	24-1.
	24-2.

X25.	25-1.
	25-2.
X26.	26-1.
	26-2.
X27.	27-1.
	27-2.
X28.	28-1.
	28-2.
X29.	29-1.
	29-2.
X30.	30-1.
	30-2.

Sampling Schedule

Date:

Time:	Low CL2 Residual:	Site:	Address:	Sampled by:

Date:

WEEK B

Time:	Low CL2 Residual:	Site:	Address:	Sampled by:

Sampling Schedule

Date:

Time	Low CL2 Residual	Site	Address	Sampled by
		X4	14530 276th Pl SS	
		X7	15400 278th SS	
		X16	14452 264th SS	
		X22	157th & 255th SS	
		X3	13904 241st St	
		X2	250th & 135th mvcc SS	
		X20	12822 241st SS	
		X5	24918 129th Pl SS	
		X11	25423 123rd Pl SS	
		X18	127th & 268th SS	
		X15	12648 282nd SS	
		X9	128th & 299th SS	

Date:

Time	Low CL2 Residual	Site	Address	Sampled by
		X10	North Ridgeview SS	
		X21	27401 137th Ave SS	

Sampling Schedule

Date:

Time	Low CL2 Residual	Site	Address	Sampled by
		X12	14041 283rd SS	
		X7	15400 278th SS	
		X6	26034 142nd SS	
		X1	150th & 255th SS	
		X13	24800 145th PL SS	
		X8	14116 243rd mvcc SS	
		X17	25506 142nd Ave	
		X14	128th & 261st SS	
		X19	27708 128th PL	
		X10	North Ridgeview SS	
		X9	128th & 299th SS	
		X21	27401 137th SS	

Date:

Time	Low CL2 Residual	Site	Address	Sampled by
		X4	14530 276th PL SS	

Sampling Schedule

Date:

Time	Low CL2 Residual	Site	Address	Sampled by

Date:

Time	Low CL2 Residual	Site	Address	Sampled by

C. Within 24hrs. following unsatisfactory routine coliform samples

Upon notification from lab of an unsatisfactory routine coliform sample:

-Follow up with DOH

-Notify General Manager as well as convene with Operations Superintendent and field crew to delegate immediate course of action

-Notify Covington Water District, regarding their wholesale intertie, to take appropriate sampling action

3 Repeat samples must be collected (per coliform positive routine sample) whenever it is a confirmed coliform present sample.

- One repeat sample from original location
- 1 repeat sample taken within 5 service connections upstream and 1 repeat sample taken within 5 service connections downstream
- Raw water sample from each groundwater source that was in use at the time the coliform positive sample was collected
- Covington Water District to respond with appropriate sampling within their system

In the month following coliform positive sample –

(collect the normal monthly number of routine samples)

D. Confirmed Total Coliform in Repeat Samples

(Confirmed Total Coliform in two or more routine / repeat samples in one month, or failure to collect all three repeat samples following coliform positive and E.coli positive routine sample.)

- Treatment Technique Trigger – perform DOH **Level 1 Assessment** for ground water

- Draft copy of **Level 1 Assessment** is available from WA. Department of Drinking Water

Assessment can be performed by water system and is a basic inspection

E. E.coli MCL Violation

- E.coli positive routine or repeat sample

- Total coliform positive routine, with coliform positive repeat

- Missing repeat sample after positive routine

- Multiple confirmed coliform positive samples in “rolling” 12 month period

- Second level 1 assessment in 12 months

Treatment technique trigger- perform **Level 2 Assessment**

- Draft copy of level 2 Assessment form is available from WA. Department of Drinking Water.

- **Level 2 Assessment** must be performed by person with state required qualifications, such as an engineer, certified operator (WDM 2 or higher), or WA. Department of Health staff.

F. Preparation Information

System Name Lake Meridian Water District	Date Plan Completed 2/22/2018	Dates Last Modified 8/2/2022
Name of Plan Preparer: Mike McGraw Position: Field Technician 3		Daytime Phone # (253) 631-3770
State Reviewer	Date Last Review	

G. Lab information

Water Management Laboratories

1515 80th St E

Tacoma, Wa 98404

(253) 531-3121

Backup lab:

Lab/cor

7619 6th ave NW

Seattle, Wa 98117

(206)781-0155

Level 1 Assessment for Ground Water

System Name:	Source Water:	Water System ID #:
System Type:	Population Served:	Water System Mailing Address:
Operator in Responsible Charge (ORC):	Phone:	
City, State:		
County:		
Sample Collector:	Phone:	
Address, City, State, Zip:		
Date(s) Assessment Completed:		

Notes: 1.Each Section Below Requires a Response
2. Within 30 days of triggering the assessment requirement, you must submit a completed assessment to the Office of Drinking Water and keep a copy in your water system files. Send form to: [list email address, postal address and fax numbers]

Best Management Practices

Best Management Practice[1]	In Place*		Potential Issue		Corrective Action Necessary	
1. Sources are protected from fecal contamination by appropriate placement and construction.	☐ Yes	☐No	☐ Yes	☐No	☐ Yes	☐No
2. Disinfection residual is maintained throughout the distribution system.	☐ Yes	☐No	☐ Yes	☐No	☐ Yes	☐No
3. Maintain the distribution system properly:						
- Employ appropriate pipe replacement and repair procedures	☐ Yes	☐No	☐ Yes	☐No	☐ Yes	☐No
- Have a regular flushing program	☐ Yes	☐No	☐ Yes	☐No	☐ Yes	☐No
- Have a storage tank & reservoir cleaning program	☐ Yes	☐No	☐ Yes	☐No	☐ Yes	☐No
- Inspect vaults routinely	☐ Yes	☐No	☐ Yes	☐No	☐ Yes	☐No
- Fully implement a Cross Connection Control Program	☐ Yes	☐No	☐ Yes	☐No	☐ Yes	☐No
- Maintain positive pressure in all parts of the distribution system.	☐ Yes	☐No	☐ Yes	☐No	☐ Yes	☐No
4. Operate and maintain disinfection treatment facilities properly (check chlorine solution tank level daily, etc.)	☐ Yes	☐No	☐ Yes	☐No	☐ Yes	☐No
5. Comply with Wellhead Protection Program requirements WAC 246-290-135(3).	☐ Yes	☐No	☐ Yes	☐No	☐ Yes	☐No
6. Ensure that the sample siting plan provides water samples that represent the distribution system	☐ Yes	☐No	☐ Yes	☐No	☐ Yes	☐No
7. Monitor that the condition of each routine and repeat sample site to ensure that no site will contaminate the sample water as it flows through the tap.	☐ Yes	☐No	☐ Yes	☐No	☐ Yes	☐No
8. Ensure that all sample collectors are thoroughly trained before being allowed to collect compliance samples.	☐ Yes	☐No	☐ Yes	☐No	☐ Yes	☐No
9 Collect investigative coliform samples after working on the water system and following any pressure loss event.	☐ Yes	☐No	☐ Yes	☐No	☐ Yes	☐No

Best Management Practices have been identified by the U.S. EPA as the best technology, treatment techniques, or procedures available for preventing the microbial contamination of the of the distribution system or the submission of coliform samples that are not representative of the distribution system water quality. The assessor is expected to evaluate the condition of the

water system and its operation against these practices and determine whether potential issues exist, conclude whether the issues could result in the coliform event, and outline if corrective action is necessary.

***Practices are not in place unless they are available in writing, such as in written Standard Operating Procedures (SOPs). Please attach copies of written SOPs to this assessment.** [1] **The Best Management Practices listed above can be found in the Safe Drinking Water Act regulations (Title 40 CFR141.63(e)) and in the U.S. EPA Publication 815-R-14-006, Revised Total Coliform Rule Assessments and Corrective Actions Guidance Manual Interim Final, September 2014.**

Incident Investigation

A list of potential issues associated with each system element is included in each section below. The list does not represent every potential issue with the element; the list is intended as a guide for the assessor.		
System Elements to Assess	**Issue(s) Found**	**Issue Description (attach photographs, if helpful)**
1. Sample site condition **-condition and location of sample tap** **-recent activity at the service connection or sample tap potentially affecting water quality**	☐ Yes ☐No	
2. Sample protocol **-flush tap** **-remove aerator** **-fixed faucet (no swivel)** **-fresh sample bottle** **-acceptable sample storage**	☐ Yes ☐No	
3. System operational changes **-new sources brought on line** **-new or modified treatment processes** **-pressure zone changes** **-new staff or change in duties**	☐ Yes ☐No	
4. Distribution System **-system pressure changes** **-fire-fighting event, flushing operation** **-cross connection control program implementation** **-new construction** **-pump stations** **-air relief valves** **-vaults** **-fire hydrants or blow offs** **-main or service line breaks** **-repairs** **-vandalism**	☐ Yes ☐No	
5. Pressure Tank **-bladder integrity (water-logged?)** **-hydropneumatic tank air compressor operation** **-hydropneumatic tank sanitary integrity of air inlet**	☐ Yes ☐No	
6. Storage Tank **-screens** **-security/vandalism** **-access opening** **-condition of tank (cracking or spalling concrete)(excessive corrosion on steel tanks)** **-liner issues** **-roof penetrations** **-vent** **-drain overflow** **-operation & maintenance**	☐ Yes ☐No	
7. Treatment Process **-interruptions** **-operation & maintenance**	☐ Yes ☐No	
8. Source – Wells **-Sanitary Control Area** **-sanitary seal** **-vent screened** **-air gap** **-cross connection** **-security/vandalism** **-pump to waste line**	☐ Yes ☐No	
9. Source – **Springs** **-Sanitary Control Area** **-condition of spring development** **-condition of spring box** **-security/vandalism**	☐ Yes ☐No	

Assessment Summary:

Issues Found	Discussion
1.	
2.	
3.	
4.	
5.	
6.	

☐ Check if Assessor did not find any causes for the contamination.

Conclusions
1.
2.
3.
4.
5.

Corrective Action Taken or Required to be Taken	Completion Date (attach photographs of completed work)
1.	
2.	
3.	
4.	
5.	

Print Name of Assessor: _____

Signature: _____ Date:_____

DOH Use Only:
Reviewed by:
Level 1 Assessment Sufficient: Yes/No
PWS has completed all corrective actions needed as defined in the assessment: Yes/No
Corrective Action Plan approved: Yes/No

Comments:

1. Pathway Identified? _____ 2. Source of coliform identified? _____

3. Low Pressure/Back Pressure? _____

Level 2 Assessment for Ground Water

System Name:	Source Water:	Water System ID #:
System Type:	Population Served:	Water System Mailing Address:
Operator in Responsible Charge (ORC):	Phone:	
City, State:		
County:		
Sample Collector:	Phone:	
Address, City, State, Zip:		
Date Assessment Completed:		

Mandatory Certified Operators (Attach separate sheet for additional mandatory positions)		
Operator Classification	Name	Certification Number
1.		
2.		
3.		
4. Cross Connection Control Specialist for and Community System and some Non-Community Systems		

Pipe Material (Attach additional sheets if necessary)	**Amount (LF)**
1.	
2.	
3.	

Coliform Summary (Review all samples collected 30 days prior and following the date of the assessment trigger.)	**Collection Date**	**Sample Purpose (Routine, Repeat, or Investigative)**	**Sample Location**	**Result**

Note: Each Section Below Requires a Response

Best Management Practices

Best Management Practices have been identified by the U.S. EPA as the best technology, treatment techniques, or procedures available for preventing the microbial contamination of the distribution system or the submission of coliform samples that are not representative of the distribution system water quality. The Best Management Practices presented below can be found in the Safe Drinking Water Act regulations (Title 40 CFR141.63(e)) and in the U.S. EPA Publication 815-R-14-006, Revised Total Coliform Rule Assessments and Corrective Actions Guidance Manual Interim Final, September 2014. The assessor is expected to evaluate the condition of the water system and its operation against these practices and determine whether potential issues exist, conclude whether the issues could cause the coliform event, and outline the corrective action required to fix the problem. *Practices are not in place unless they are available in writing, such as in written Standard Operating Procedures (SOPs). Please attach copies of written SOPs.

Best Management Practice	**In Place***	**Potential Issue**	**Corrective Action Necessary**
A. Sources are protected from fecal contamination by appropriate placement and construction.	☐ Yes ☐No	☐ Yes ☐No	☐ Yes ☐No

B. A disinfection residual is maintained throughout the distribution system.	☐ Yes	☐No	☐ Yes	☐No	☐ Yes	☐No
C. Proper maintenance of the distribution system including:						
- Appropriate pipe replacement and repair procedures	☐ Yes	☐No	☐ Yes	☐No	☐ Yes	☐No
- Flushing program	☐ Yes	☐No	☐ Yes	☐No	☐ Yes	☐No
- Storage tanks & reservoirs cleaning program	☐ Yes	☐No	☐ Yes	☐No	☐ Yes	☐No
- Routine vault inspections	☐ Yes	☐No	☐ Yes	☐No	☐ Yes	☐No
- Fully implemented Cross Connection Control Program	☐ Yes	☐No	☐ Yes	☐No	☐ Yes	☐No
- Positive pressure maintained in all parts of the distribution system.	☐ Yes	☐No	☐ Yes	☐No	☐ Yes	☐No
D. Proper operation and maintenance of disinfection treatment facilities	☐ Yes	☐No	☐ Yes	☐No	☐ Yes	☐No
E. Compliance with Wellhead Protection Program requirements WAC 246-290-135(3).	☐ Yes	☐No	☐ Yes	☐No	☐ Yes	☐No
F. Sample siting plan ensures that the quality of the water in the sample is representative of the water in the distribution system	☐ Yes	☐No	☐ Yes	☐No	☐ Yes	☐No
G. The condition of routine and repeat sample sites is monitored to ensure that each site will not contaminate the sample as it flows through the tap.	☐ Yes	☐No	☐ Yes	☐No	☐ Yes	☐No
H. All sample collectors are thoroughly trained before being allowed to collect compliance samples.	☐ Yes	☐No	☐ Yes	☐No	☐ Yes	☐No
I. Investigative coliform samples are collected whenever work is performed on the water system and following any pressure loss event.	☐ Yes	☐No	☐ Yes	☐No	☐ Yes	☐No

Incident Investigation

A list of potential issues associated with each system element is included in each section below.

System Elements to Assess **(Multiple forms may be required; Field Inspection Forms with photographs must be included)**	**Issue(s) Found**		**Issue Description**
A. Evaluate sample site.			
1. Sample tap condition	☐ Yes	☐No	
2. Sample tap location	☐ Yes	☐No	
3. Irregular use of the sample tap or service connection	☐ Yes	☐No	
4. Plumbing changes associated with the sample tap or service connection	☐ Yes	☐No	
5. Plumbing failures	☐ Yes	☐No	
6. Unprotected cross connections on the service line or plumbing	☐ Yes	☐No	
7. All backflow assemblies on the service line or plumbing are tested annually and properly operated and maintained	☐ Yes	☐No	
8. Low pressure events or changes in water pressure on the service line or plumbing	☐ Yes	☐No	
9. Point of Entry or Point of Use treatment devices installed on the service line or plumbing	☐ Yes	☐No	
10. Sample site concerns in general	☐ Yes	☐No	
B. Sample protocol			
1. Sampling protocols followed	☐ Yes	☐No	

System Elements to Assess (multiple forms may be required; Field inspection Forms with photographs must be included)	**Issue(s) Found**	**Issue Description**
2. Tap flushed, aerator removed, non-swivel faucet, fresh sample bottles, appropriate sample storage	☐ Yes ☐No	
C. Investigative Coliform Samples		
1. Investigative sample results	☐ Yes ☐No	
D. Records Review		
1. Operation and maintenance	☐ Yes ☐No	
2. Recent water quality tests	☐ Yes ☐No	
3. Pumping records	☐ Yes ☐No	
4. SCADA records	☐ Yes ☐No	
5. Valve records	☐ Yes ☐No	
6. Cross connection control records	☐ Yes ☐No	
7. Vault records	☐ Yes ☐No	
8. Fire hydrant records	☐ Yes ☐No	
9. Flushing records	☐ Yes ☐No	
10. Construction records	☐ Yes ☐No	
11. Water main repair records	☐ Yes ☐No	
12. Storage tank records	☐ Yes ☐No	
E. System Operations		
1. New sources placed into service	☐ Yes ☐No	
2. Pressure zone changes	☐ Yes ☐No	
3. New employees or changes in job duties	☐ Yes ☐No	
F. Distribution System		
1. Evidence of low or negative distribution system pressures	☐ Yes ☐No	
2. Pipe Material, Biofilm, and/or Water Chemistry Concerns	☐ Yes ☐No	
3. Unprotected cross connections	☐ Yes ☐No	
4. Sanitary defects at pump stations	☐ Yes ☐No	
5. Pump station operations	☐ Yes ☐No	
6. Pump controls	☐ Yes ☐No	
7. Below grade facilities, such as air relief valves, proper venting and no standing water	☐ Yes ☐No	
8. Fire hydrant testing and maintenance	☐ Yes ☐No	
9. All backflow assemblies are tested and operational	☐ Yes ☐No	
10. New construction	☐ Yes ☐No	
11. Recent water main breaks or repairs	☐ Yes ☐No	
12. Flushing program	☐ Yes ☐No	
13. Evidence of intentional distribution system contamination	☐ Yes ☐No	
G. Storage Tank		
1. Overflow and vent screens	☐ Yes ☐No	
2. Security and vandalism	☐ Yes ☐No	
3. Access hatch seal	☐ Yes ☐No	

System Elements to Assess (multiple forms may be required; Field inspection Forms with photographs must be included)	**Issue(s) Found**	**Issue Description**
4. Storage tank physical condition	☐ Yes ☐No	
5. Venting and screening	☐ Yes ☐No	
6. Drain and overflow line designs	☐ Yes ☐No	
7. Is proper O & M being performed?	☐ Yes ☐No	
8. Leakage	☐ Yes ☐No	
9. Tank circulation/water age	☐ Yes ☐No	
10. What is the measured chlorine residual of the water in the tank?	Residual	
11. Unsealed openings	☐ Yes ☐No	
H. Treatment Process (if applicable)		
1. Treatment devices operational and maintained	☐ Yes ☐No	
2. New installations or repairs	☐ Yes ☐No	
3. Modified treatment processes	☐ Yes ☐No	
4. Treatment interruptions	☐ Yes ☐No	
5. Free chlorine residual downstream of the point of application	Residual	
6. CT failures	☐ Yes ☐No	
7. Flow rate compatible with treatment capacity	☐ Yes ☐No	
8. Treatment plant housekeeping	☐ Yes ☐No	
I. Source – Wells (if applicable)		
1. Sanitary Control Area	☐ Yes ☐No	
2. Intact sanitary seal	☐ Yes ☐No	
3. Well cap vent and screen	☐ Yes ☐No	
4. Pump to Waste air gap	☐ Yes ☐No	
5. Unprotected cross connections	☐ Yes ☐No	
6. Well Use	☐ Primary ☐ Seasonal ☐ Emergency	
7. Casing extends six inches above grade	☐ Yes ☐No	
8. Standing water near the wellhead	☐ Yes ☐No	
9. Security and vandalism	☐ Yes ☐No	
10. Material spills	☐ Yes ☐No	
11. Source water quality testing	☐ Yes ☐No	
12. Well house condition	☐ Yes ☐No	
J. Source – Spring (If applicable)		
1. Sanitary Control Area	☐ Yes ☐No	
2. Spring development	☐ Yes ☐No	
3. Spring box condition and maintenance	☐ Yes ☐No	
4. Security and vandalism	☐ Yes ☐No	
5. Source water quality sampling	☐ Yes ☐No	
K. Environmental Events		
1. Rainfall events	☐ Yes ☐No	
2. Rapid snow melt or flooding concerns	☐ Yes ☐No	

System Elements to Assess (multiple forms may be required; Field inspection Forms with photographs must be included)	**Issue(s) Found**	**Issue Description**
1. Aquifer characteristics	☐ Yes ☐No	
2. Power outages	☐ Yes ☐No	
3. Temperature concerns	☐ Yes ☐No	

Note: Within 30 days of triggering the assessment requirement, you are required to return the completed assessment form to the Office of Drinking Water and keep a copy in your water system files.

Assessment Summary:

Issues Found	Discussion
1.	
2.	
3.	
4.	
5.	
6.	

☐Check if Assessor did not find any causes for the contamination

Conclusions
1.
2.
3.
4.
5.

Corrective Action Taken or Required to be Taken (for actions yet to be completed include Interim Corrective Action required to protect public health and, if applicable, lift an active Health Advisory)	Actual or Proposed Completion Date (attach photographs of completed work)
1.	
2.	
3.	
4.	
5.	

DOH Use Only:
Reviewed by:
Level 2 Assessment Sufficient: Yes/No
PWS has completed all corrective actions needed as defined in the assessment: Yes/No
Corrective Action Plan approved: Yes/No

Comments:

1. Pathway Identified? _____
2. Source of *E.coli* identified? _____
3. Low Pressure/Back Pressure? _____

Appendix J

Cross Connection Control Plan

THIS PAGE INTENTIONALLY BLANK.

LAKE MERIDIAN WATER DISTRICT
KING COUNTY, WASHINGTON

RESOLUTION NO. 678-03-23

RESOLUTION OF THE BOARD OF COMMISSIONERS OF LAKE MERIDIAN WATER DISTRICT, KING COUNTY, WASHINGTON, APPROVING A REVISED CROSS CONNECTION CONTROL PROGRAM MANUAL.

WHEREAS, the Lake Meridian Water District of King County, Washington ("District") provides water supply to residents and property located within its corporate and service area boundaries; and

WHEREAS, the District is required by law to develop and implement a cross connection control program to eliminate cross connections in the District's public water supply system whenever possible or, when cross connections cannot be eliminated, to control such cross connections by installation of approved backflow prevention devices commencement with the degree of hazard relating to the cross connection; and

WHEREAS, Washington Administrative Code 246-290-490 (WAC) requires that all community water systems comply with the cross connection control requirements specified in such regulations, include a written description of the cross connection control program in the water system plan for a community water system required under WAC 246-290-100 and include the minimum program elements described in WAC 246-290-490(3) in such cross connection control program; and

WHEREAS, the District previously adopted policies and procedures relating to cross connection control and the District has updated and revised its cross connection control program, such revised and updated cross connection control program as set forth in a document entitled "Cross Connection Control Program – March, 2023" which is attached hereto as Exhibit A and incorporated herein by this reference (the "Cross Connection Control Program"); and

WHEREAS, the purpose of the Cross Connection Control Program is to protect the public water system from contamination via cross connections by eliminating cross connections or, when cross connections cannot be eliminated, by controlling cross connections through the installation of backflow prevention assemblies; and the development and implementation of the Cross Connection Control Program is necessary to protect public health and safety;

WHEREAS, pursuant to RCW 57.08.005(3), the District has full authority to regulate and control the use, content, distribution and price of water supplied by the District to it's customers and properties; now, therefore,

BE IT RESOLVED, by the Board of Commissioners of Lake Meridian Water District as follows:

1. The Cross Connection Control Program as set forth in Exhibit A attached hereto is hereby approved and adopted for implementation.

2. All District resolutions, policies and procedures, are hereby rescinded, superseded and/or amended to be in accordance with the Cross Connection Control Program approved and adopted herein.

3. This resolution shall be effective the date set forth below.

ADOPTED by the Board of Commissioners of Lake Meridian Water District, King County, Washington, at the regular open public meeting thereof held on the 23rd day of March, 2023.

Lake Meridian Water District
Board of Commissioners

By: _____
Patrick M. Hanis, President

By: Charles E. Wilson
Charles E. Wilson, Secretary

By: _____
Gary G. Cline, Commissioner

Lake Meridian Water District
Cross Connection Control Program

Updated 3/21/2023

Lake Meridian Water District
CROSS-CONNECTION CONTROL PROGRAM
(March 2023)

Commissioners
Gary G. Cline
Patrick M. Hanis
Charles E. Wilson

Lake Meridian Water District
27224 – 144th Avenue SE
Kent, WA 98042
Telephone: (253) 631-3770

William C. Hall, General Manager
Brent Lewis, Operations Manager

Consulting Engineer
BHC Consultants, LLC
1601 fifth Ave South
Ste. 500
Seattle, WA 98101
Telephone: (206) 505-3400
Fax: (206) 505-3406

Attorney
Curtis Chambers, Attorney
Inslee, Best, Doezie, & Ryder PS
10900 NE 4th Street, Suite 1500
Bellevue, Washington 98004
Telephone: 425 455-1234

Table of Contents

PURPOSE 3
GENERAL POLICY 3
RESPONSIBILITY 3
District 3
Water Customer 4
Local Administrative Authority 4
PERSONNEL 4
Program Administrator 4
HAZARD EVALUATION 5
New Service Connections 5
SCHEDULE FOR INITIAL HAZARD ASSESSMENTS 6
Existing Services 6
Inspection of High Hazard Sites 7
REGULATIONS AND REFERENCES 9
BACKFLOW PREVENTION REQUIREMENTS 9
BACKFLOW ASSEMBLY INSTALLATION 10
General Requirements 10
Thermal Expansion 10
BACKFLOW ASSEMBLY TESTING 12
BACKFLOW PREVENTION INSPECTION PROCEDURE 13
Inspection and Testing of New Installations 14
Previously Installed Assemblies 14
Inspection and Testing of Repaired or Replaced Installations 17
ENFORCEMENT 17
District Authorized To Hire Approved Contractor 18
RECORDS AND REPORTS 18
CONSUMER EDUCATION 19
Customer Information Packet 20
BACKFLOW INCIDENT RESPONSE PROCEDURES 20
PROCUEDURE FLOW CHART CONFIRMED BACKFLOW INCIDENT 22
PROTECTION OF STAFF 23
DETERMINING THE CAUSE OF CONTAMINATION 23
Wells 23
Treatment 23
Storage Tanks 23
Distribution System 24
Customers Service 24
EMERGENCY CONTACTS 24
Department of Health 24

APPENDICES

A - District Adopting Resolution
B - Definitions
C - Application for Water Service and Water-Use Questionnaire
D - Preliminary Non-Residential Customers Cross-Connection Control Hazard Assessment Form
E - BAT List Customer Information
F - Letters
G - Annual Summary
H - Backflow Incident Report Form
I - Standard Details

LAKE MERIDIAN WATER DISTRICT

CROSS-CONNECTION CONTROL PROGRAM

PURPOSE

Lake Meridian Water District has developed this Cross-Connection Control Program under the requirements of the Washington Administrative Code (WAC 246-290-490) the purpose of which is to protect the public water system and public health from contamination via a cross connection. This program addresses this requirement by establishing minimum operating policies, backflow assembly installation practices and testing procedures. It is supplemented with published documents and materials to aid in identifying hazards and devices and to better inform the public. The authority to enforce these practices and policies is set forth in WAC 246-290-490, Chapter 57.08 Revised Code of Washington and District Resolution (see **Appendix A**).

GENERAL POLICY

In order to provide for an orderly and adequate means of backflow prevention for the public water distribution system, new water service connections will be required to sign a service agreement (**Appendix C**) as a condition of service. For customers supplied prior to the adoption of the resolution in **Appendix A**, an implied service contract allows the District to protect the distribution system from contamination through a system-installed backflow prevention assembly on the customer's service line. Common definitions used in this Program are included in **Appendix B**.

RESPONSIBILITY

District

The District or designated representative shall prevent the contamination of the water distribution system by eliminating or controlling cross-connections, providing guidance for new installations and existing connections, maintaining records on backflow assembly devices, and responding to customer inquiries to meet the requirements of the state regulations in cross connection control.

The District's responsibility for cross-connection control shall begin at the water supply source; include all the public water treatment, storage and distribution facilities, and end at the point of delivery to the consumer's water system, which begins at the downstream end of the service connection or water meter on the public right-of-way or utility held easement.

The District shall use a combination of in-premise and premise isolation as a means of controlling cross-connections.

- Premise isolation, as defined in WAC 246-290-010, is the District's preferred method of cross-connection control to isolate the consumer's water system from the District's distribution system, whereby an approved air gap or approved backflow prevention assembly is installed at the service connection.

- When the in-premises isolation method is to be used for backflow protection for residential irrigation systems, residential swimming pools, spas, decorative ponds and boilers, the backflow prevention must provide a level of protection commiserate with the District's assessed degree of hazard. In-premises isolation employs an approved air gap or approved backflow assembly that is located within the property lines of the customer's premises, which is generally a plumbing fixture. If the customer denies access for inspection and there is not an immediate hazard present, the District at the customer's expense shall install an air gap or reduced pressure backflow assembly at the property line.

Water Customer

The water consumer shall be responsible for identifying and eliminating cross-connections or controlling them through the installation, regular testing and maintenance of approved backflow prevention assemblies.

The water customer shall be responsible for providing the necessary information, scheduling and providing access for inspection (as required) to allow a determination of cross-connection potential and the necessary control.

The water customer is responsible for notifying the District of any assemblies that the customer believes are no longer required.

The water customer is responsible for all costs associated with the installation, testing repair and replacement of backflow prevention assemblies.

Local Administrative Authority

Lake Meridian Water District and the local administrative authority (local city and county building and plumbing officials) agree to delineate responsibilities and coordinate activities relating to cross-connection control. The District will be responsible for the protection of the water distribution system from back flow at the property line. The local administrative authority will be responsible for cross-connection control within the property lines as required by the Uniform Plumbing Code.

PERSONNEL

Program Administrator

The Cross-Connection Control Specialist (CCS) is responsible for organizing and implementing the District's program. The CCS shall hold a valid Washington State Cross-Connection Control Specialist certification in accordance with WAC 246-290-490 and be experienced in water works operations. Duties include:

- The initial screening of all service applications and determination of the need for the proper backflow prevention assembly.
- Issuing correspondence to customers and state health authorities.

- Record keeping of the program database.
- Periodic review of customer activities that would indicate changes.
- Initiation of enforcement action; and response to backflow incidents.
- Initial and repeat survey of facilities.
- Maintain a list of District pre-approved Backflow Assembly Testers (BAT) to perform backflow prevention assembly inspection and testing.
- Review of testing done by a certified BAT within 30 days of receipt.
- Provide follow-up on test reports that are deficient in any way.
- Recommend installation standards and procedures required for premise isolation.
- Recommend material for public education.
- Input test results and device data into the cross connection control program database.
- Report incidences of fraud or gross incompetence on the part of any BAT or CCS to the DOH Operator Certification staff.

HAZARD EVALUATION

The Cross-Connection Control Specialist (CCS) for the District shall establish the priority for the Health Hazard Evaluation and repeat survey of new and existing premises for cross connections, based on the risk management policies established by the District, and the minimum requirements imposed by the State Department of Health.

In accordance with the Washington State Department of Health regulations (WAC 246-290-490), and the Pacific Northwest Section of the American Water Works Association, Cross-Connection Control Manual, Accepted Procedure and Practice sixth edition (or latest edition thereof), the CCS shall establish standards and procedures governing the application, installation, approval and testing of backflow prevention assemblies, and other related tasks. If deemed necessary to reduce the risk of contamination of the public water supply system, more stringent requirements may be established.

The systematic program of health hazard evaluations shall be established with priority given on the basis of risk to public health and shall be as follows:

The procedures for evaluating the backflow prevention requirements for new and existing customers are as follows:

New Service Connections

For all new residential services, the District will require that the customer submit with the application for water service with a completed “Water Use Questionnaire” (see **Appendix C**). If the customer’s questionnaire indicates special plumbing, such as a lawn sprinkler system, or hazardous water use on premises, the District’s CCS will complete an evaluation of the hazard posed by the proposed special plumbing system and provide recommendations for the installation at the meter of either a DCVA or an RPBA. As an alternative to the above requirement for a

survey by the CCS, at the discretion of the District, may specify the type of backflow assembly required to be installed as a condition of service.

For commercial services, the District will require the customer to submit, within 60 days of notification, a completed Water Use Questionnaire (See **Appendix C**). The procedure used for evaluating the hazard re-assessment and the potential change in the required backflow prevention will be the same as used for the initial hazard assessment.

SCHEDULE FOR INITIAL HAZARD ASSESSMENTS

Evaluation of Hazards – Initial Assessment Task	**Schedule**
Assessment of all new connections water service	At time of application for water service
Identification and assessment of high hazard premises which are listed on Table 9 of WAC 246-290-490	Within 9 months
Identification and assessment of hazardous premises supplemental to Table 9	Within 12 months
Identification of residential connections with special plumbing facilities and/or water use on the premises	Within 18 months

Existing Services

For all existing non-residential services, the District will require the customer to submit, within nine months of notification an evaluation (Preliminary Cross-Connection Control Hazard Assessment Form for Non-Residential Customers, **Appendix D**), by the District's CCS, of the hazard posed by the plumbing system. The CCS will provide recommendations for the installation at the meter of either a DCVA or an RPBA.

As an alternative to the above requirement for a survey by the CCS, the customer may agree to install an AG or RPBA for premises isolation within 90 days of notification by the District or an alternate time period acceptable to the District.

For all existing residential services, the District will require the customer to submit within four months of notification, a completed "Water Use questionnaire" in **Appendix C**. An example letter is included in Appendix F, L_1. If the customer's reply indicated special plumbing or water use on premises, the customer shall submit to an evaluation by the District's CCS of the hazard posed to the water system by the customer's plumbing system. The CCS will provide recommendations for the installation at the meter of either a DCVA or an RPBA.

As an alternative to the above requirement for a survey by a CCS, the District may specify the backflow assembly required as a condition of service. The District's CCS will provide guidance on the type of backflow assembly to be installed.

For all existing services where the customer fails to supply the required information for a hazard assessment or fails to submit a completed "Water Use Questionnaire," the District may have the assessment made by the CCS, require the installation of a Reduced Pressure Backflow Assembly for premises isolation, or take other such actions consistent with the previously stated policies and bill the customer for any associated costs, including, but not limited to, labor and materials.

The following schedule will be utilized in conducting hazard reassessments.

Type of Service	Frequency of Re-evaluation
Any services with Reduced Pressure Backflow Assemblies (RPBA) installed for premises isolation	Non required as long as the RPBA passes annual tests and inspections
Commercial services with Double Check Valve Assemblies (DCVA)	Every two years and upon change in use or ownership
Commercial services when purveyor relies upon in-premises protection	Every two years and upon change in use, ownership or plumbing system
Residential services with special plumbing where the purveyor relies upon compliance with the Uniform Plumbing Code (UPC)	Every 2 – 3 years
Residential services with DCVA installed for premises isolation	Every 4 – 5 years
Residential services with no known special plumbing or water use on the premises	Every 4 – 5 years and upon change in use, ownership or plumbing

Inspection of High Hazard Sites

Identification of the High Hazard Premises listed in Table 9 of WAC 246-290-490, shall be assigned priority inspections by the District. Special emphasis will be on the following types of facilities: Hospitals; schools; clinics; laboratories; piers and docks; mortuaries; sewage facilities; food and beverage processing plants; chemical plants using water process, metal plating industries, petroleum processing or storage plants, car washes, facilities having a non-potable auxiliary water supply, and any others as specified by the District.

TABLE 9 of the WAC 246-290-490
HIGH HEALTH CROSS-CONNECTION HAZARD PREMISES
REQUIRING PREMISES ISOLATION BY AG OR RPBA

Agricultural (farms and dairies)

Beverage bottling plants

Car washes

Chemical plants

Commercial laundries and dry cleaners

Premises where both reclaimed water and potable water are provided

Film processing facilities

Food processing plants

Hospitals, medical centers, nursing homes, veterinary, medical and dental clinics, and blood plasma centers

Premises with separate irrigation systems using the purveyor's water supply and with chemical addition+

Laboratories

Metal plating industries

Mortuaries

Petroleum processing or storage plants

Piers and docks

Radioactive material processing plants or nuclear reactors*

Survey access denied or restricted

Wastewater lift stations and pumping stations

Wastewater treatment plants*

Premises with an unapproved auxiliary water supply interconnected with the potable water supply

+ For example, parks, playgrounds, golf courses, cemeteries, estates, etc.

* RPBAs for connections serving these premises are acceptable only when used in combination with an in-plant approved air gap; otherwise, the purveyor shall require an approved air gap at the service connection.

The District shall use the Cross-Connection Control Hazard Survey Report located in the appendix to identify the need for approved backflow assemblies to protect from the hazard identified on the report and to locate any existing assemblies in need of testing.

The District shall notify the owner or other responsible party of the high hazard property or premises of the inspection requirement.

- If during the site survey, a cross-connection is found that presents in the opinion of the CCS an imminent threat to public health water service to the site shall be immediately terminated, and shall remain off until the hazard is corrected.
- The state certified CCS shall provide the customer, the property owner and the District a written notice of the results of the cross-connection survey including a list of any cross-connections found. If an approved backflow assembly is required on the customer's system, the type and location of the assembly shall be specified in the CCS' written notice. The owner shall have the required backflow prevention assembly installed and tested within 30 days after the date of the issuance of the written notice.
- The water customer shall notify the District at the completion of the required work and certification that the backflow assembly has been installed and tested by a certified Backflow Assembly Tester, with a satisfactory test result.

- If the water customer does not complete the work required in the CCS' letter within the time specified, the District will send a letter will by certified mail, requiring the water customer to complete the work within 15 days and reminding the customer of the District's authority to deny water service to anyone who does not comply with backflow protection requirements. The District will levy a standard charge against the customer's water service account for each certified letter sent to the customer.
- The District shall have the authority to collect any fees, charges and penalties levied or assessed against the customer's water service account under this program pursuant to the provisions of RCW 57.08.081 and as such statute is revised or amended, including the right to file and foreclose a lien for non-payment against the real property receiving water service.

Premises defined as having moderate or low health hazard conditions will be assigned lower priorities of inspections by the District CCS

REGULATIONS AND REFERENCES

The control or elimination of cross-connections shall be in accordance with the most recent revisions of applicable state, county and local rules and regulations, including but not limited to:

- The Federal Safe Drinking Water Act
- WAC 246-290-490 Cross-Connection Control
- Washington State Plumber Code 18.106 RCW
- Washington State Builders Code 19.27 RCW
- Washington State Public Water Systems Mandate RCW 70.119A.060
- Washington State powers and Duties of the State Board of Health RCW 43.20.050
- Lake Meridian Water District Resolution No. 39

The policies, procedures and criteria for determining and interpreting appropriate levels of protection and control shall be in accordance with the most current edition of the following references:

- Cross-Connection Control Manual: Accepted procedure and Practice published by the Cross-Connection Control Committee of the Pacific Northwest subsection of the American Water Works Association.
- Manual of Cross-Connection Control, published by the University of Southern California Foundation for Cross-Connection control and Hydraulic Research.
- Recommended Practice for Backflow Prevention and Cross-Connection Control (M-14), published by the American Water Works Association.

BACKFLOW PREVENTION REQUIREMENTS

When cross-connections cannot be eliminated the following methods of backflow prevention control shall be considered as minimum protection for Lake Meridian Water District.

- An Air Gap (AG) separation or a Reduced Pressure Backflow Assembly (RPBA) shall be installed if the cross connection creates an actual or potential health hazard.
- When the cross-connection does not pose an unreasonable health risk, but causes an objectionable taste, odor or color, a Double Check Detector Assembly (DCDA) or Double Check Valve Assembly (DCVA) shall be installed.
- A Pressure Vacuum Breaker Assembly (PVBA) or an Atmospheric Vacuum Breaker (AVB) my be installed where the substance which could backflow is objectionable but does not pose an unreasonable risk to health and where there is no possibility of back pressure in the down- stream piping. Pressure Vacuum Breaker Assemblies (PVBA) and Atmospheric Vacuum Breakers are not allowed by the District as premise or in-premise isolation from irrigation systems.

BACKFLOW ASSEMBLY INSTALLATION

General Requirements

The District has no regulatory responsibility or authority over the installation and operation of the customer's plumbing system. The customer is solely responsible for compliance with all applicable regulations and for the prevention of contamination of his plumbing system from sources within the premises. Any action taken by the District to survey plumbing, inspect or test backflow prevention assemblies, or to require premise isolation is solely for the purposes of reducing the risk of contamination of the District's distribution system. An example letter requesting the backflow prevention assembly is included in **Appendix F, L_2**.

- All approved assemblies installed shall be the size, type and model pre-approved by the Washington State Department of Health and Lake Meridian Water District. The District's approved standard details for Double Check Valve Assembly (17A, 17B, 18A, and 18B) are located in **Appendix I**.
- The orientation for which they are approved;
- A manner and location that facilitates their proper operation, maintenance, and testing or inspection;
- A manner that will protect them from weather-related conditions such as flooding and freezing; and
- Compliance with all applicable safety regulations.
- For installations where 24-hour uninterrupted service is necessary, a parallel backflow prevention assembly shall be provided to permit assembly testing and maintenance. The bypass or parallel assembly must be of the same type as the main assembly.

Thermal Expansion

A backflow assembly placed on a water service can cause thermal expansion. Serious damage could occur to a plumbing system if the pressure and high temperature caused by thermal expansion is not relieved. Excessive water temperature or pressure inside a hot water tank, if not relieved, could cause the tank to explode. The customer's hot water tank and connected plumbing system is normally protected by a temperature/pressure relief valve located at or near

the top of the hot water heater. In addition, some plumbing codes require a thermal expansion tank to be installed.

Schedule for Installation of Backflow Assemblies

Type of Service	Schedule
New connections with cross-connections	Before service is initiated
Existing connections with Table 9 of WAC 246-290-490 and other high hazard cross-connection hazards cross-connection hazards	Within 90 days after notification
Existing connections with other Table 9 of WAC 246-290-490 or high hazard cross-connections	Within 180 days after notification
Existing fire protection systems using chemicals or supplied by an unapproved auxiliary source	Within 90 days after notification
Existing fire protection systems not using chemicals and supplied by District water	Within one year after notification

BACKFLOW ASSEMBLY TESTING

All Backflow preventers that the District relies on for protection of the water system shall be inspected and if applicable tested, including backflow preventers for in-premise protection. Inspection and testing will be conducted by a DOH certified CCS for proper application and installation. A DOH certified BAT will perform inspections for the proper installation of devises (backflow preventer that can't be tested) and will conduct all testing of assemblies (backflow preventers that can be tested) relied upon by the District to protect the public water system. A list of approved BAT is included in **Appendix E**.

All backflow prevention devices and assemblies, approved by the Washington State Department of Health, shall be inspected and tested at the time of:

- Initial installation. If an assembly was installed prior to the adoption and implementation of this program, an initial inspection time shall be scheduled.
- After the assembly is repaired, reinstalled or relocated.
- Annually after the initial installation.
- As required by the District if testing indicates repeated failures.

Annual testing of backflow assemblies shall be per WAC 246-290-490. The District may require more frequent testing of assemblies if it deems necessary. The testing procedure shall be in accordance with the requirements of the Washington State Department of Health. The District will notify in writing all owners of backflow assemblies that the District relies upon for protection of the District public water system that the device needs to be inspected and tested. See example letter in **Appendix F, L_3**.This will be sent out not less than 30 days before the due date of inspection or testing. The notice will specify the date the inspection/test report must be received by the District.

Backflow Prevention Inspection Procedure

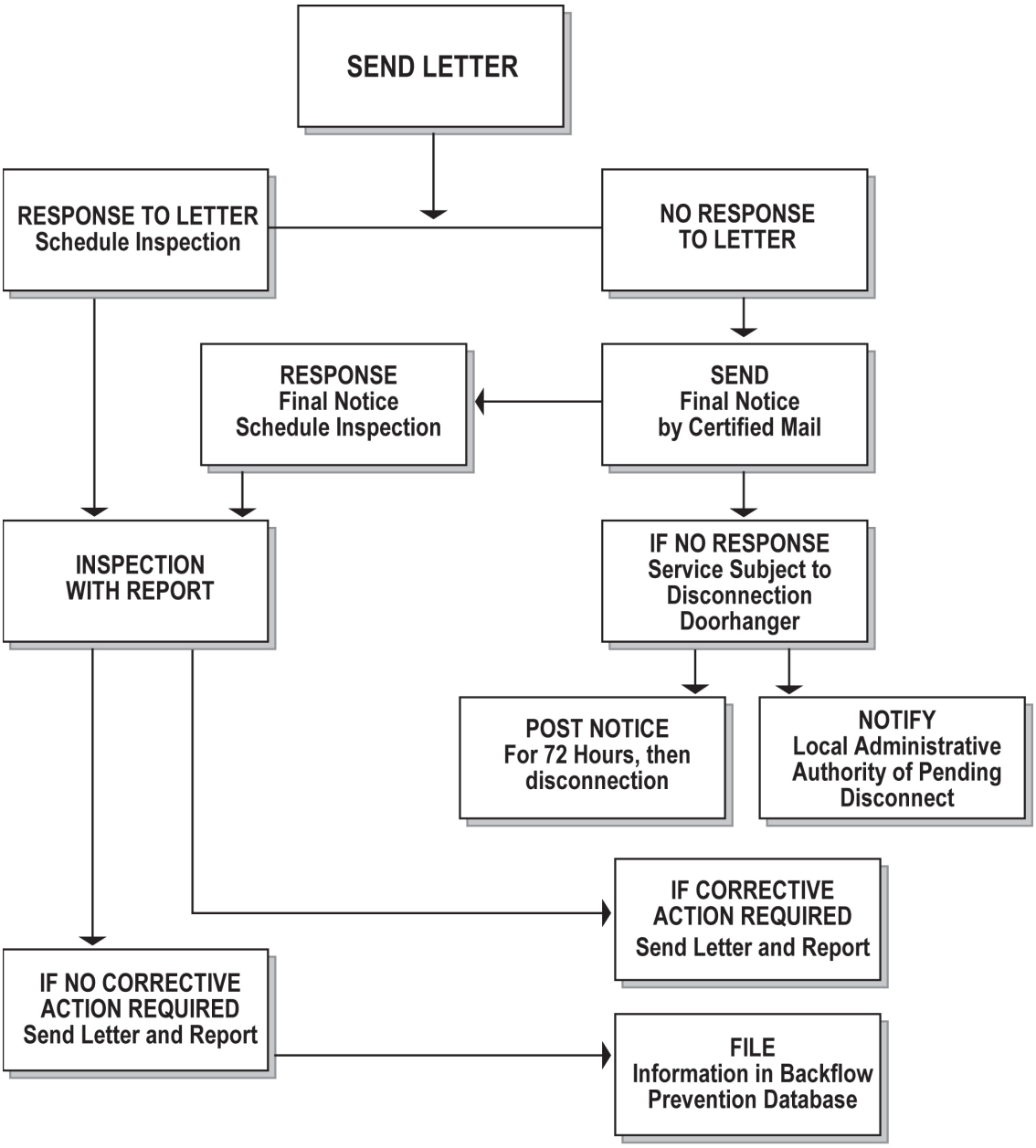

Inspection and Testing of New Installations

All new assemblies shall be tested upon initial installation and the results forwarded to the District. The District shall notify property owners of the required backflow prevention assemblies required, including air gaps. The District shall notify property of required yearly inspection of newly installed backflow assemblies.

If at the inspection, the test of the newly installed backflow assembly fails its performance test, the installer/owner of the backflow assembly shall have the repair completed, and provide evidence of satisfactory performance by a state certified backflow assembly tester, submitted to the District within 30 days of the initial failed performance test. All test reports whether satisfactory or unsatisfactory shall be submitted to the District.

The District or its designated representative shall assess the degree of hazard prior to and after the elimination and removal of any assembly. An assembly no longer needed, and for which the site was inspected, shall be removed from the District's database of active backflow prevention devices.

If at the inspection, the test of the newly installed backflow assembly fails its performance test, the installer/owner of the backflow assembly shall have the repair completed, and provide evidence of satisfactory performance by a state certified backflow assembly tester, submitted to the District within 30 days of the initial failed test. All test reports whether satisfactory or unsatisfactory shall be submitted to the District.

Previously Installed Assemblies

All assemblies shall be tested annually by a certified backflow assembly tester who has on file at the District a certificate providing verification of the accuracy of his test equipment. If this information is not on file, the tester shall submit verification prior to doing any testing.

The District shall notify customers with backflow assembly devices of the requirement for testing not less than 30 days prior to the required test date. The completed satisfactory test results shall be forwarded to the District not more than 30 days after the test date.

If the satisfactory test results haven't been received by the District within 30 days of notification, a second letter, included in **Appendix F, L_4**, will be sent to the property owner or customer, by certified mail, requesting satisfactory testing reports to be forwarded to the District within 15 days of the mailing of this second letter. If the District has not received satisfactory test results after this 45 day period, notification of water shut off within 72 hours shall be hand delivered to the premises.

If the District has determined a high health hazard exists, termination of water service will follow immediately thereafter. If the District determines there is a low health hazard and no imminent danger, the following corrective measures shall be followed.

- Denying or discontinuing water service to a customer's premises until the cross-connection hazard is eliminated or controlled to the satisfaction of the District. Shutoff will follow within 72 hours of the posting of the notice.

- Requiring the consumer to install an approved backflow assembly for premises isolation commensurate to the degree of hazard.
- The District will install an approved backflow assembly for premises isolation commensurate with the degree of hazard.
- The District shall levy a standard charge against the customer's water service account for each notification of water shut-off and/or installation of a backflow prevention assembly in order to achieve premises isolation.
- Water service shall be terminated if the backflow assembly is not tested and/or repaired and retested to the District's satisfaction and will remain disconnected until the testing is successfully completed and satisfactory reports are provided to the District. The District shall levy a standard charge against the customer's water account for each shut-off and turn-on action required at the affected address.
- The District of its designated representative may require testing more often than annually or may field verify test results if site conditions change or if the assembly has had previous failures.

The District or its designated representative shall assess the degree of hazard prior to and after the elimination and removal of any assembly. An assembly no longer needed, and for which the site was inspected, shall be removed from the District database of active backflow prevention assemblies.

Backflow Inspection-Action Required
(Customers With Approved Backflow Assembly)

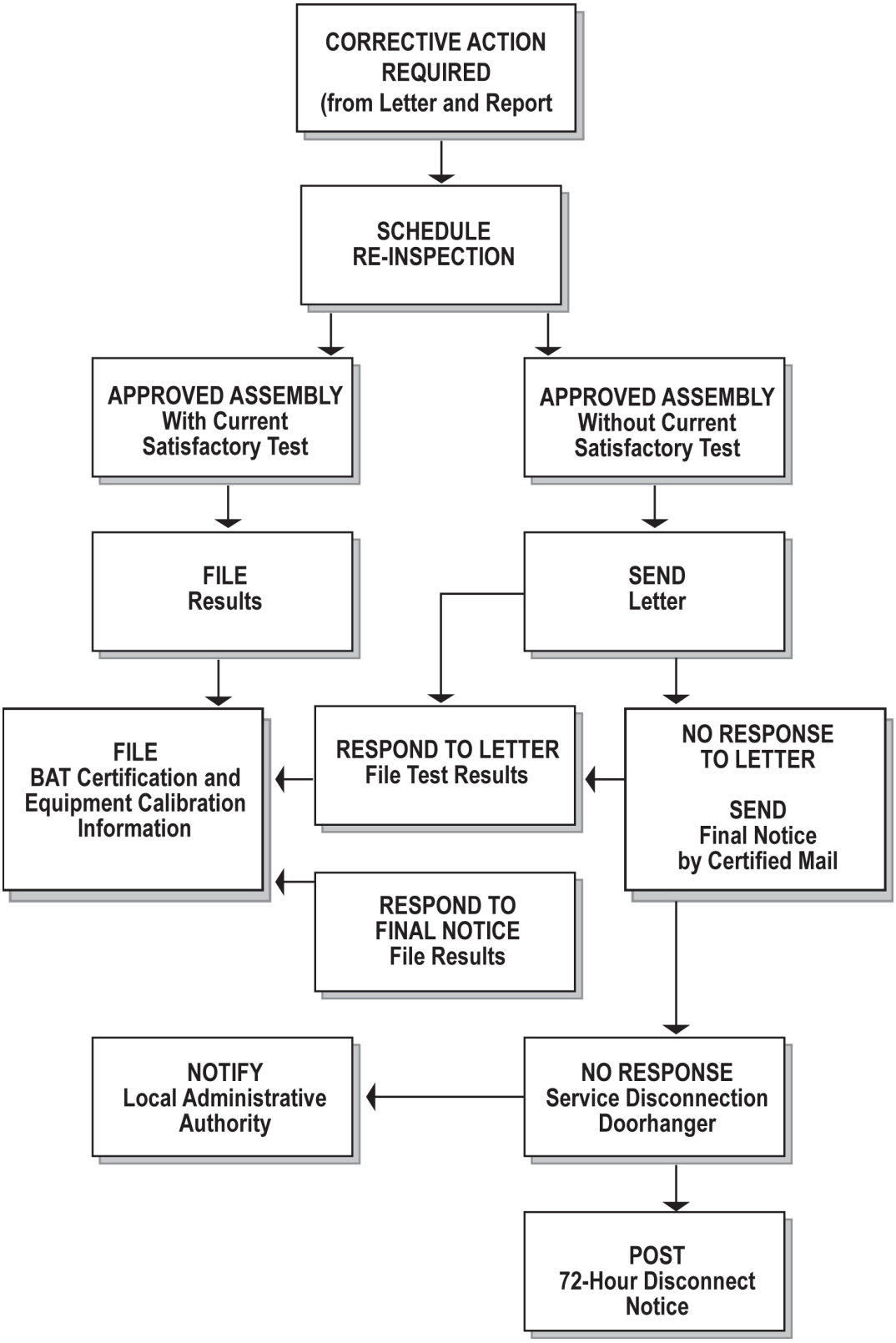

Inspection and Testing of Repaired or Replaced Installations

Testing is required of any assembly that is repaired, replaced, reinstalled, or relocated due to problems found during the annual test or due to revisions of the plumbing system.

ENFORCEMENT

The installation or maintenance of a cross connection to Lake Meridian Water District's public water supply is prohibited. The District may immediately terminate water service, require disconnection of service, or have the proper backflow assembly installed at the customers expense when it has been determined a health hazard may exist. Such as when an uncontrolled cross-connection exists, or is not controlled commensurate with the degree of health hazard.

Termination of service will occur immediately if a cross-connection posing a High Hazard health risk is discovered.

Termination of service may also occur 72 hours after written notice has been delivered to the customer or posted on the customer's front door. Prior to taking action to disconnect or deny service to a premise, the appropriate Local Administrative Authority and Fire Marshal shall be notified.

In each of the following instances, enforcement options may be utilized:

- Refusal to install a backflow prevention assembly when required by the District, or the State Department of Health.
- Existence of an improper type, defective or improperly installed backflow prevention assembly.
- Failure to have the backflow prevention assembly tested per District and State requirements.
- Existence of a Low Health hazard cross-connection to the District public water system.
- Refusal to allow inspection of the premises.

In the event that the water service is terminated and/or the meter removed, then the service shall not be resumed nor the meter reinstalled until the customer has complied with the cross-connection program requirements, and paid any the delinquent rates, charges or fines. In addition the customer shall have paid the Districts standard turn-on and/or meter reinstallation charges.

The District, at it option, may offer to arrange for the installation, inspection and/or testing of the customer-owned backflow assembly by a certified Backflow Assembly Tester and will bill the customer the actual or typical cost of inspection, installation and/or testing plus administrative costs.

The cost of disconnection or installation of a proper backflow assembly by the District shall be charged to the property, and payment enforced in the same manner as for other rates and charges.

The foregoing remedy for violations shall not be exclusive. The District, the State Department of Health, and/or other regulatory agencies shall be entitled to enforce the cross-connection prevention program and the attached regulations in any manner available by law.

The District shall not be liable for damages nor will allowances be made for loss of production, sales or services, or any other consequential damages arising from the implementation of any of the measures required by and/or contained in the cross-connection prevention program.

District Authorized To Hire Approved Contractor

In the event the cross-connection is not abated within the prescribed time, water service to the premises will be discontinued unless the General Manager and CCS determine that the service should not be interrupted. The District then may hire a contractor to install the appropriate backflow protection required for the hazard that exists. In such event the District will bill the customer for all costs and administrative charges incurred.

RECORDS AND REPORTS

An adequate record keeping system is essential for the operation of a cross-connection prevention program. These records form the basis for any enforcement action or legal defense by the District, as well as giving a basis for comparing test results of different backflow assemblies. In accordance with WAC 246-290-490(3) information kept in the District's cross-connection control database will consist of the following.

For approved air gaps:

- Customer address/ property owner
- Assessed health hazard level
- Exact location(s) on premises
- Installation date(s)
- Inspection results and history, test results and repairs
- Name of person conducting inspection

These records will be retained for as long as the air gap remains in use.

For approved backflow prevention assemblies:

- Customer address/property owner
- Assessed health hazard level
- Required backflow assembly
- Assembly type, manufacturer, model, serial number, size
- Exact location(s) on premises
- Installation date(s)
- Inspection results and history, test results and repairs
- Name of person conducting inspection

These records will be retained for the life of the backflow assembly.

For approved Atmospheric Vacuum Breakers:

- Customer address/ property owner
- Assessed health hazard level
- Required backflow assembly
- Assembly type, manufacturer, model, serial number, size
- Exact location(s) on premises
- Installation date(s)
- Inspection results and history, test results and repairs
- Name of person conducting inspection

These records will be retained for the life of the backflow assembly.

In addition the following reports are required and are to be kept on file for five years:

- An annual Cross-Connection Control Program activities report for the calendar year, to be sent to the Department of Health when requested, examples in **Appendix G**. This form is to report (for a calendar year) the CCC implementation activities, such as status of high-hazard premises protection, backflow preventer inventory/testing information, and hazard evaluations. Referred to the "blue form" by the Department of Health.
- Cross-Connection Control Summary information report when requested by DOH, or when there are significant policy changes, examples in **Appendix G**. This form is used to report the type, policies, and provisions of the CCC written program. Referred to as the "cream form" by the Department of Health.
- Backflow Incident report which shall be made available to the Washington State Department of Health upon request. This form is to document and report exceptions to mandatory premises isolation requirements allowed under WAC 246-290-490(4)(b)(iii). This is only used when granting exceptions. Referred to as the "green form" by the Department of Health.

CONSUMER EDUCATION

Public education is a most important aspect of the cross-connection prevention program. Customers should be provided with information brochures describing cross-connection hazards in homes and the recommended devices that should be installed to reduce the hazard. The District's education efforts should make it clear that the information provided is based on its perspective of cross connection control and the necessary backflow prevention required in protecting the public water supply, and that the customer has the obligation to comply with these requirements.

The District public education program will explain the necessity of the cross connection program and prevent misunderstandings. This education program consists of: speeches to local civic groups, articles in customer newsletters, fact sheets and brochures, consumer confidence reports, displays at public gatherings and special training sessions for District employees and interested persons.

Customer Information Packet

The customer information packet will be handed out to each customer pertaining to the assessed degree of hazard at their premises, see **Appendix E**. The priority will be determined from the risk assessment conducted by the District CCS. The packet will summarize the cross-connection control program and the responsibility to protect the public water system by both the District and the customer.

Explanation of the types of facilities requiring backflow prevention assemblies, which type of assembly is required to mitigate the hazard and an explanation of each assembly and its installation and testing requirements. An explanation of the annual inspection/ test reports, the time frame for returning reports, and the enforcement actions by the District.

BACKFLOW INCIDENT RESPONSE PROCEDURES

Due to the potential impact on the public water system from contamination caused by cross-connections, the District shall respond to backflow incidents upon receipt of an incident report as soon as possible. An example report is included in **Appendix H**. The response time may vary depending upon the location of the incident, time of day of the report and location of the responder, but the District will strive to respond within 30 minutes. An action plan for responding to a contamination emergency, can also be found in the District's Emergency Response Plan and a more detailed plan is discussed below.

A backflow incident may be a complaint of bad tasting or smelling water; water that is discolored; or may involve a chemical that was back siphoned into the system.

When a water taste, odor and/or color complaint is received, the person responding should gather as much information from the caller as possible. While it is important to get a good description of the problem, the person taking the complaint should refrain from suggesting possible problems or situations as people tend to follow your expertise rather than carefully assessing the situation.

The next step is to determine what level of response is needed. Multiple calls dictate a larger number of responders. Certain steps need to be taken whether one call or many calls are received. These include:

1. Notify the General Manager and the Operations Manager.
2. Respond to site and interview customer/caller to determine an obvious cause.
3. Try to determine the cause and eliminate it.
4. Note anything unusual (work activity, tanker trucks, sick people, etc) in the surrounding area.
5. Evaluate the complaint to determine further actions.
6. Take a water sample from the tap and from the meter. Take pH and chlorine residual readings.
7. Deliver samples to Water Management Laboratories for analysis.
8. If problem results in numerous calls, a portion of the system may need to be shut down, another source of water provided or a boil order issued. These actions require notification of the Department of Health.

9. CALL the media before they contact the District!

Actions for a confirmed contamination event are dependent upon consideration of involving law enforcement. If it is believed to be a simple backflow incident than following response will be utilized. If however there has been a security breach, a threat to a public water supply, an eyewitness account of suspicious activity at a District facility or if in the opinion of staff that this is something other than a backflow incident, law enforcement needs to be notified immediately.

Once a confirmed backflow has occurred (probably multiple calls from the same area of the District), these immediate response procedures will be utilized:

1. A confirmed backflow incident should be treated the same as a hazardous materials spill in terms of personal safety. Use established protocols, safety equipment and common sense.
2. Respond to site and interview customer/caller to determine any obvious cause.
3. Determine the cause of the problem; give consideration to the distribution system as a potential source of the contaminant (e.g., air valve inlet below ground). Conduct a house-to-house survey to search for the source of contamination and the extent that the contaminant has spread through the distribution system. A check of water meters may show a return of water (meter running backward) to the distribution system.
4. Eliminate the source of the problem and minimize the effects of the backflow through containment (Isolating the area from the rest of the water system, leave one valve open to ensure that positive water pressure is maintained throughout the isolated system.) and begin public notification. Contact DOH (1-877-481-4901), King county Public Health (206-296-9755) and the local administrative authority. and follow any directions they may give. When the cross connection responsible for the system contamination is located, discontinue water service to that customer, until the customer completes the corrective action ordered.
5. Begin customer notification as soon as possible, notify customers not to consume or use water. Start the notification with the customers nearest in location to the assumed source of contamination (usually the customer(s) making the water quality complaint. Inform the customer about the reason for the backflow incident investigation and the District's efforts to restore water quality as soon as possible. Let the customer know that they will be informed when they may use water, the need to boil water used for consumption until a satisfactory bacteriological test result is obtained from the lab, etc. Where a customer cannot be contacted immediately, then Place a written notice on the front door handle, and a follow-up visit will be made to confirm that the customer received notice about the possible contamination of the water supply. When dealing with a backflow incident, let customers know that it could take several days to identify the source and type of contaminant(s) and to clean and disinfect the distribution system.
6. If appropriate, refer customers that may have consumed the contaminant or had their plumbing systems contaminated to public health personnel and the local administrative authority (plumbing inspector).
7. Take a water sample from the tap and from the meter. Take pH and chlorine residual readings.
8. Deliver samples to Water Management Laboratory for analysis.
9. CALL the media before they contact the District!

10. Restore water quality by flushing the customer's service line and the main line in the contaminated area. DO NOT start flushing until the source of contamination is identified (flushing may aggravate the backflow situation.
11. Take repeat chlorine and pH readings and water samples for lab analysis.

If local law enforcement has determined that the backflow incident is a terrorist event, the District will be acting in support of several other federal, state and local agencies.

PROCEDURE FLOW CHART CONFIRMED BACKFLOW INCIDENT

The following actions will be utilized by the responder to a backflow incident and by the office in making notifications.

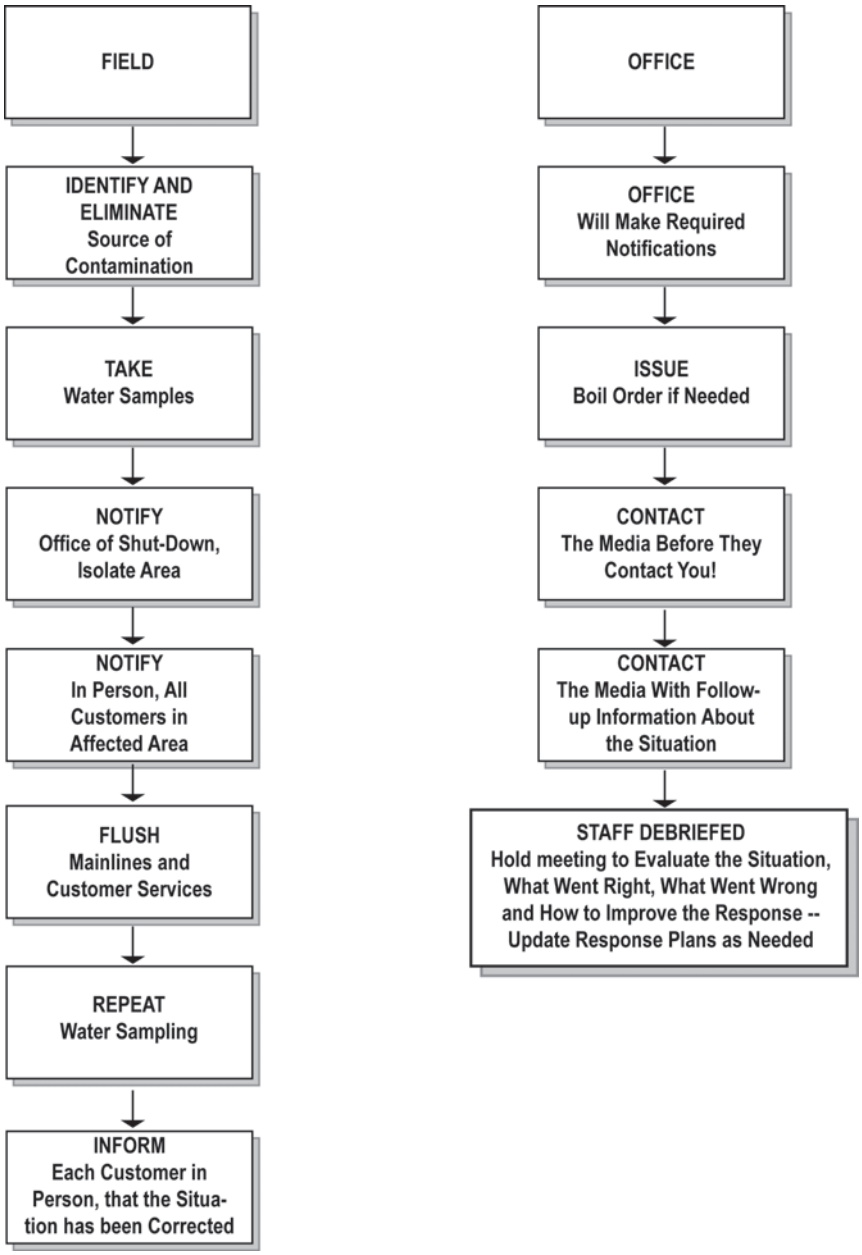

PROTECTION OF STAFF

In most cases, the investigation of a suspected contamination site will not present a significant hazard. It is presumed that any contaminants that might be present are confined to water and are present in dilute concentrations where risk to personnel can be minimized through use of good safety practices including:

- DO NOT eat, drink or smoke at the site.
- DO NOT taste or smell the water samples.
- Avoid all skin contact with the water. If contact does occur, immediately flush the affected are with clean water brought to the site for that purpose.
- MINIMIZE the time personnel are on site collecting samples.
- USE personal protective equipment such as splash proof goggles, disposable gloves, proper footwear, disposable shoe covers, and disposable rain gear.
- Fill sampling bottles slowly to avoid volatilization or aerosolization of contaminants.

DETERMINING THE CAUSE OF CONTAMINATION

Check the following:

Wells/Monitoring Wells

- Well casing is above ground and the area around well is clean.
- There are no openings in the well cap or casing, including around electrical wires.
- There is no standing water around the source.
- The well is at least 100 feet from sources of possible contamination (septic tank, drain field, sewer lines, manure or garbage).
- The well has been effectively disinfected following any well or pump repairs.

Treatment

- Check chlorine residual for adequate levels. It should be higher than 0.2 mg/l at the entrance point to the distribution system.

Storage Tanks

- Check that there are no openings that allow entry of insects, surface water, debris etc.
- The access hatch has no openings and the seal is intact.
- Overflow and drain lines are protected with screens or angle-flap valves and discharge is above ground level. The drain pipe should not be submerged in non-potable water.
- There are no signs of dirt, insects, growth, sediment or debris inside tank.
- There are no cracks, leaks, or vegetation growth on the outside of tank.
- Check chlorine residual.

Distribution System

- There are no obvious breaks or leaks.
- The fire department didn't flow a large amount of water.
- Faulty or submerged airvac.
- The system has been effectively disinfected following new construction or repair work.
- There have been no low pressure water outage incidents.
- Non-looped, dead end sections of the system are regularly flushed.
- Take chlorine residual, it should be greater than 0.2 mg/l. Water turbidity should be greater than 5 NTU.

Customers Service

- Check chlorine residual.
- Check for cross connections at hose bibs and faucets.
- Check pop machines and co2 container hook-ups in commercial establishments.
- Check mop sinks.

EMERGENCY CONTACTS

A full list of emergency contacts can be found in the District Emergency Response Plan.

Department of Health

DOH 24-hour hot line	1-877-481-4901
Regional Office	253-395-6750
Seattle/King County Public Health	206-296-4600
Water Management Laboratories (Tacoma)	253-531-3121
Television	
KOMO TV 4	206-404-4145
KING TV 5	206-448-5555
KIRO TV 7	206-728-7777

Appendix A

District Adopting Resolution

Appendix B

Definitions

APPENDIX B

DEFINITIONS (DEFINITIONS AND ACRONYMS FROM WAC 246-290-010)

Approved Air Gap – is separation between the free- flowing end of a potable water supply pipeline and the overflow rim of an open or non-pressurized receiving vessel. To be approved the separation must be at least:

- Twice the diameter of the supply piping measured vertically from the overflow rim of the receiving vessel, and in no case is less than one inch, when unaffected by vertical surfaces (sidewalls).
- Three times the diameter of the supply piping if the horizontal distance between the supply pipe and a vertical surface (sidewall) is less than or equal to three times the diameter of the supply pipe. Or if the horizontal distance between the supply pipe and intersecting vertical surfaces (sidewalls) is less than or equal to four times the diameter of the supply pipe and in no case less than one and one-half inches.

Approved Atmospheric Vacuum Breaker – means an AVB of make, model and size that is approved by the Health Department. AVB's that appear on current approved backflow prevention assemblies list developed by the University of Southern California Foundation for Cross-Connection Control and Hydraulic Research or that are listed or approved by other nationally recognized testing agencies acceptable to the local administrative authority.

Approved Backflow Prevention – an air gap or backflow assembly that has been approved by the Department of Health.

Auxiliary Water Supply – any water supply on/or available to, the premises other than supplied by the District.

Backflow – the undesirable reversal or flow of water or other substances through a cross connection into the district water system, or the consumers potable water system.

Backflow Assembly Tester (BAT) – a person certified by the Washington State Department of Health to test backflow prevention assemblies.

Backflow Prevention Assembly – a certified device that prevents backflow into the District water distribution system.

Backflow Prevention Device – refers to a backflow preventer that is not designated for in-line testing.

Backflow/Cross Connection Specialist – a person holding a valid CCS in accordance with WAC 246-290.

Backpressure – means a pressure caused by a pump, elevated tank or piping, boiler or other means, on the consumer's side of the service connection that is greater than the pressure provided by the public water system and which may cause backflow.

Backsiphonage – means backflow due to a reduction in system pressure in the purveyor's distribution system and/or consumer's water system.

Certified Cross-Connection Control Specialist – an individual certified by DOH and approved by the District to administer a cross connection control program and to conduct cross connection health hazard surveys.

Check Valve – is a generic term used for a variety of valves that specifically allow flow in one direction only.

Combined Fire Protection System –a fire sprinkler system that:

- Is supplied only by the purveyor's water
- Does not have a fire department pumper connection; and
- Is constructed of approved potable water piping and materials that serve both the fire sprinkler system and the consumer's potable water system.

Consumers Water System – is any potable and/or industrial water system that begins at the point of delivery from the District water meter or connection and is located on the customer's premises.

Contaminant – any substance present in drinking water that any adversely affect the health of the consumer or the aesthetic qualities of the water.

Cross-connection – any physical arrangement connected directly or indirectly to the District water distribution system whereby it may be possible for contaminated or used water or other substances to enter any part of the District's water distribution system.

Cross-Connection Control Program – means the administrative and technical procedures the purveyor implements to protect the public water system from contamination via cross-connections as required in WAC 246-292

Cross-Connection Control Specialist – means a person holding a valid CCS certificate issued in accordance with WAC 246-292.

Cross-Connection Control Summary Report–means the annual report that describes the status of the purveyor's cross-connection program.

Customer – any person or organization who receives water from the District.

Customer's System – the water piping system located immediately downstream from the District water meter or service connection.

Degree of Hazard – shall express the results of an evaluation of a health, system or plumbing hazard.

Distribution System – the District's network of pipes and other facilities which are used to distribute water from the source, treatment, transmission, or storage facilities to the water user.

District – Lake Meridian Water District

Double Check Detector Assembly – an approved assembly consisting of two approved double check valve assemblies, set in parallel, equipped with a meter on the bypass line to detect small amounts of water leakage or use.

Double Check Valve Assembly – an approved assembly composed of two single, independently acting check valves, loaded to the closed position by springs or weights, and installed as a unit with, and between, two resilient seated shutoff valves and having suitable connections for testing.

Facility Survey – the on site review for the purpose of evaluating any health hazards to the potable water system. A survey of the customer's premises is not intended to be an inspection of the entire plumbing system, it allows the District CCS to make a judgment of what requirements will be imposed upon the customer to obtain, or continue to obtain water from the purveyor.

Flow Through Fire System – means a sprinkler system that:

- Is supplied by the purveyor's water;
- Does not have a fire department pumper connection;
- Is constructed of approved water piping and materials to which sprinkler heads are attached; and
- Terminates at a connection to a toilet or other plumbing fixture to prevent the water from becoming stagnant.

High Health Hazard – a cross-connection which could impair the quality of potable water and create an actual public health hazard through poisoning or spread of disease by sewage, industrial liquids or waste.

In-Premise Protection – means a method of protecting the health of consumers served by the consumer's potable water system, located within the property lines of the consumer's premises by the installation of an approved air gap or backflow prevention assembly at the point of hazard, which is generally a plumbing fixture.

Local Administrative Authority – the local official, board, department or agency authorized to administer and enforce the provisions of the Uniform plumbing Code as adopted under chapter 19.27 RCW.

Low Health Hazard – a cross-connection that could cause an impairment of the quality of potable water to a degree that does not create a hazard to the public health, but does adversely and unreasonably affect the aesthetic qualities of such potable waters for domestic use.

Maximum Contaminant Level (MCL) – the maximum amount of a contaminant allowed in a sample of water according to federal and state regulations.

Non-Potable Fluid – any water, other liquid, gas, or other substance which is not safe for human consumption, or is not part of the public potable water supply as described by the health authority.

Primary Disinfection – means a treatment process for achieving inactivation of Giarda lambliaq cysts, viruses, or other pathogenic organisms of public health concern to comply with the treatment technique requirements of Part 6 of this chapter.

Potable Water – water, which is safe for human consumption and free from harmful or objectionable materials, as described by the health authority.

Premises – a piece of land to which water is provided, including all structures and improvements located on it.

Reclaimed Water – means effluent derived in any part from sewage from a wastewater treatment system that has been adequately and reliably treated so that as a result of that treatment, it is suitable for beneficial use or a controlled use that would otherwise occur, and it is no longer considered wastewater.

Reduced Pressure Backflow Assembly (RPBA) – a device incorporating two or more check valves and an automatically opening differential relief valve located between the two checks, two shut off valves, and equipped with the necessary appurtenances for testing.

Reduced Pressure Detector Assembly (RPDA) – an approved assembly consisting of two approved reduced pressure backflow assemblies, set in parallel, equipped with a meter on a bypass line to detect small amounts of water leakage or use.

Safe Drinking Water Act – Legislation enacted by the US Congress in1974 to ensure that the public is provided with safe drinking water.

Service Connection – the piping connection by means of which water is conveyed from the District's distribution main to a customer's property line, or to the end of the water connection.

Thermal Expansion –the pressure increase due to a rise in water temperature. The problem becomes acute in heated water piping systems when such a system becomes "closed" due to ma backflow prevention assembly, which disallows expansion beyond that point.

Un-Approved Auxiliary Water Supply – means a supply (other than Lake Meridian Water District's supply) available to the customers premises that is either not approved for human consumption by the health agency having jurisdiction or is not otherwise acceptable to the purveyor.

Uniform Plumbing Code – means the code adopted under RCW 19.27.031(4) an amended under chapter 51-46 WAC. This code establishes statewide minimum plumbing standards applicable within the property lines of the consumers premises.

Used Water – means water which has left the control of the purveyor.

USC FCCCHR – The abbreviation for the UNIVERSITY OF Southern California Foundation for Cross-Connection Control and Hydraulic Research. It is the agency which tests and approves backflow prevention assemblies by approved standards.

ABBREVIATIONS AND ACRONYMS

AG – Air Gap

AVB – Atmospheric Vacuum Breaker

BAT – Backflow Assembly Tester

CCS – Cross-Connection Control Specialist

DCDA – Double Check Detector Assembly

DCVA – Double Check Valve Assembly

IAPMO – International Association of Plumbing and Mechanical Officials

PVBA – Pressure Vacuum Breaker Assembly

RPBA – Reduced Pressure Backflow Assembly

RPDA – Reduced Pressure Backflow Device

SVBA – Spill Resistant Vacuum Breaker Assembly

UBC – Uniform Building Code

UL – Underwriters laboratory

UPC – Uniform Plumbing Code

Appendix C

Application for Water Service and Water-Use Questionnaire

Lake Meridian Water District
Application for Residential and Non-residential
Water Service (Service Agreement)

Owner's Name: _____**Phone:** _____

Mailing Address: _____

Location Address: _____

Legal Description: _____

The undersigned applicant hereby applies for a water connection to the above-described property.

1. The applicant is the owner of the described property or the authorized agent of the owner.

2. As a condition of King County Water District No. 111, hereinafter referred to as the Purveyor, providing and continuing service to the above described property, the property owner, by signing this application, agrees to comply with:

   a. All provisions of the attached current Ordinance, Resolution and/or By-laws of the Purveyor, or latest revision thereof; and

   b. Other such current (attached) and future rules and regulations that govern the Purveyor's water system.

3. The property owner specifically agrees:

   a. To install and maintain at all times his plumbing system in compliance with the most current edition of the **insert applicable code, i.e., city, county and/or state** Plumbing Code as it pertains to the prevention of potable water system contamination and prevention of pressure surges and thermal expansion in his water piping (for thermal expansion, it shall be assumed that a check valve is installed by the Purveyor on the water service pipe);

   b. Within 30 days of the Purveyor's request (or alternate schedule acceptable to the Purveyor):

      i) To install, maintain, test and repair in accordance with the Purveyor's cross-connection control standards all premises isolation backflow prevention assemblies required by the Purveyor to be installed to protect the public water system from contamination; and
      ii) To report to the Purveyor the results of all assembly tests and/or repairs to the premises isolation backflow prevention assemblies.

   c. As a condition of the Purveyor waiving the requirement for premises isolation by a reduced pressure backflow assembly on the property owner's service pipe:

i) To authorize the Purveyor to make periodic water use surveys of the premises;
ii) Within 30 days of the Purveyor's request, to install, test, maintain, and repair in accordance with the Purveyor's cross connection control standards (copy received with this application) all in-premises backflow prevention assemblies that provide equivalent protection for the Purveyor's distribution system;
iii) To report to the Purveyor within 30 days of obtaining the results of all tests and repairs to the aforementioned backflow prevention assemblies; and
iv) To report to the Purveyor any change to the plumbing system.

d. Not to make a claim against the Purveyor or its agents or employees for damages and/or loss of production, sales or service, in case of water pressure variations, or the disruption of the water supply for water system repair, routine maintenance, power outages, and other conditions normally expected in the operation of a water system.

e. To pay his water bill within 30 days from the date of billing.

After 30 days of the Purveyor mailing a written notice to the property owner of his breach of this agreement, the Purveyor may terminate water service.

In the event legal action is required and commenced between the parties to this agreement to enforce the terms and conditions herein, the substantially prevailing party shall be entitled to reimbursement of all its costs and expenses including but not limited to reasonable attorney's fees as determined by the Court.

Applicant's Signature _____Date _____

Attachments received (have customer initial):

Water Rates/Charges _____
Service Connection Information _____
Water Service Policy _____

For Purveyor Use Only

_____/_____/____ Date connection fee received
_____/_____/____ Date Water Use Survey questionnaire received
_____/_____/____ Date risk assessment completed; by _____
Name of CCS
_____/_____/____ Date customer notified of requirement for BPA
_____/_____/____ Date BPA installation approved
_____/_____/____ Date BPA test report accepted
_____/_____/____ Date BPA information entered into data base

WATER USE QUESTIONNAIRE
Residential Customers

Customer Account Number (optional)
Customer Name
Address Line 1
Address Line 2

Please indicate whether the special plumbing or activities listed below apply to your premises:

Yes	*No*	*Plumbing or Activity Present on Customer's Premises**
		Underground sprinkler system
		Water treatment system (e.g., water softener)
		Solar heating system
		Residential fire sprinkler system
		Other water supply (whether or not connected to plumbing system)
		Sewage pumping facilities or grey water system
		Boat moorage with water supply
		Hobby farm
		Animal watering troughs
		Swimming pool or spa
		Greenhouse
		Decorative pond
		Photo lab or dark room
		Home-based business. If Yes, list type/describe (e.g., beauty salon, machine shop, etc.): _____ _____ _____

* Based on their knowledge of residential connections served, public water systems may "customize" this list by adding or deleting plumbing categories or activities

Completed by (print name): _____ Date: _____

Resident's Signature: _____

Appendix D

Preliminary Non-Residential Customers Cross-Connection Control Hazard Assessment Form

PRELIMINARY NON-RESIDENTIAL CUSTOMERS
CROSS-CONNECTION CONTROL HAZARD ASSESSMENT FORM

Name of Customer or Business: _____

Address: _____

Phone Number: _____

Description of Business: _____

Is your business or premises of a type included in the table below (check all that apply)?

Agricultural (farm or dairy)		Metal plating industry	
Beverage bottling plant		Mortuary	
Car wash		Petroleum processing or storage plant	
Chemical plant		Pier or dock	
Commercial laundry or dry-cleaners		Radioactive material processing plant or nuclear reactor	
Having both reclaimed water and potable water provided		Survey access denied or restricted	
Film processing facility		Wastewater lift station or pumping station	
Food processing plant		Wastewater treatment plant	
Hospital, medical center, nursing home, veterinary, medical, or dental clinic, or blood plasma center		Having an unapproved auxiliary water supply interconnected with the potable water supply	
Having separate irrigation system using purveyor's water and adding chemicals*		Other (describe) *[Purveyor to add other types of premises considered to be high-hazard]*	
Laboratory		Other (describe) *[See above]*	

*e.g., parks, playgrounds, golf courses, cemeteries, estates, etc.

Other potential cross-connection concerns:

☐ Irrigation system

☐ Fire sprinkler system, using ☐ not using ☐ chemicals or anti-freeze

☐ Swimming pool

☐Other (describe): _____

Note to Customer: This form is used for preliminary assessment only. The water purveyor may require a more thorough assessment at a later date.

This form was completed by (print name): _____ Date: _____

Please return completed form by {insert date} and send to: King County Water District No. 111, 27224 – 144th Avenue SE, Kent, WA 98042

CROSS-CONNECTION CONTROL HAZARD SURVEY REPORT
NON-RESIDENTIAL CUSTOMERS

Survey date: _____

Customer Information

Premises name: _____Telephone: _____

Address: _____ZIP: _____

Contact person: _____Title: _____

Description of premises: _____

Description of water use: _____

Water Service and Backflow Prevention Assembly (BPA) Size/Type

Service Type	Service Size	Meter Size	BPA Size	BPA Type
Domestic				
Fire				
Irrigation				
Other				

Cross-Connection Control Specialist (CCS) Information

Name: _____ Telephone: _____

Company name: _____

Address: _____ ZIP: _____

DOH CCS Certification #: _____ Year certified: _____

Cross Connection Control Survey Report (Continued)
Page 2 of 3

Survey Results

Note: The CCS's survey shall include an inspection of the premises isolation assembly to verify that it is installed correctly and is a currently listed DOH-approved assembly.

Item	Location & Description of Cross Connection	Backflow Prevention Provided/Required

Attach additional sheets if needed.

Surveyor's Comments

_____
_____
_____
_____
_____
_____
_____
_____
_____
_____
_____
_____

Cross-Connection Control Survey Report (Continued)
Page 3 of 3

Surveyor's Recommendations

I certify that this cross-connection hazard survey accurately reflects the overall risk posed by the customer's plumbing system to the Purveyor's distribution system. Based on the above survey, I certify that:

1. I found the following type(s) of premises isolation backflow preventer(s):

   Air Gap ____ RPBA/RPDA ____ DCVA/DCDA _____ None ____.

2. The existing backflow preventer(s) is/are properly installed.

   Yes ____ No ____ N/A ____.

3. The existing backflow preventer(s) is/are commensurate with the degree of hazard:.

   Yes ____ No ____ N/A ____.

4. Since no backflow preventer was installed for premises isolation, the premises owner should install a premises isolation backflow preventer of the following type:

   Air Gap ____ RPBA/RPDA ____ DCVA/DCDA ____ N/A ____.

5. The premises owner should replace the existing premises isolation backflow preventer(s) with the following:

   Air Gap ____ RPBA/RPDA ____ DCVA/DCDA ____ N/A ____.

The completed survey report shall be first signed by the CCS conducting the survey, and then counter-signed by the owner of the premises or the owner's authorized agent.

CCS Signature: _____Date: _____

As the Owner of the Premises (or Owner's authorized agent), I certify that I have received a copy of this completed Cross-Connection Control Hazard Survey Report.

Signature: _____**Date**: _____

Note: Customers and regulatory agencies should be aware that the Purveyor's requirement for this cross-connection hazard survey and/or for the installation of a specific backflow prevention assembly on a service pipe ***do not*** constitute an approval of the customer's plumbing system, compliance of the customer's plumbing system with the Uniform Plumbing Code or an assurance of the absence of cross connections in the customer's plumbing system.

Appendix E

BAT List
Customer Information

BACKFLOW ASSEMBLY TESTERS PRE-APPROVED FOR SUBMITTING TEST REPORTS TO LAKE MERIDIAN WATER DISTRICT

The following table lists Backflow Assembly Testers (BATs) that are pre-approved to test backflow assemblies in our water system's service area. We compiled the list by identifying individual testers who requested to work in this area or who previously submitted properly completed test reports to our system. An asterisk (*) denotes BATs that are also DOH-certified Cross-Connection Control Specialists (CCSs). ***Note: listing does not constitute an endorsement of these BATs by our system or a certification of the quality of services they provide.***

To appear on our pre-approved BAT list, the tester must:

- Show proof of current BAT certification from DOH;
- Submit documentation that his/her assembly test equipment has been verified for accuracy within the last 12 months and calibrated if needed; and

As an alternative to the above, pre-approved testers must document that they appear on the approved BAT list of another nearby water system that has a testing QA/QC program acceptable to our system.

WAC 246-290-490 requires a DOH-certified BAT to test all assemblies (RPBA, RPDA, DCVA, etc.) that protect the distribution system. Assemblies that protect the public water system must be tested in accordance with DOH-approved field test procedures:

- Upon installation, and annually thereafter;
- After repair, reinstallation, or relocation; and
- After a backflow incident.

Note: the DOH BAT certification is a special certification separate from other waterworks operator certification categories, plumbing licenses, contractor registration, etc. Other licenses, certifications and/or registrations may be required to install backflow prevention assemblies and/or perform maintenance work on assemblies within buildings. However, only a currently DOH-certified BAT may test the assemblies that protect the public water system from contamination.

Name of Tester Company Name and Address	**Phone Number**	Email Address
1st Choice Testing	(425) 273-3106	office@1stchoicetesting.com
Backflow Systems, LLC	(310) 251-9809	manny@backflowsystemsnet
5 Star Backflow Services	(425) 516-3580	info@5starbackflow.com
A+ Backflow, Inc.	(425) 830-3749	aplusbackflow@hotmail.com
Backflows NW, Inc.	(425) 277-2888	office@backflowsnw.com
Royal Waldock and Associates	(253) 549-5573	waldockdesign@aol.com

Name of Tester **Company Name and Address**	**Phone Number**	Email Address
P.L.E. Backflow Testing	(253) 297-4387	backflowtester@hotmail.com
ABC Water Specialty	(253) 355-9826	info@abcwaterspecialty.com
Affordable Washington Backflow	(360) 333-2057	info@washingtonbackflowtesting.com
Batmaster	(425) 397-0275	batmaster@backflowservice.net
Axis Backflow Testing	(206) 886-1860	axisbackflow@outlook.com

BACKFLOW PREVENTION ASSEMBLY TEST/AIR GAP INSPECTION REPORT

PWS ID 41900B WATER SYSTEM NAME Lake Meridian Water District COUNTY King

ACCOUNT #_____ BACKFLOW PREVENTER ID _____ TEST REPORT ID _____

NAME OF PREMISES _____ Commercial ☐ ☐Residential ☐

SERVICE ADDRESS _____ CITY _____ ZIP _____

CONTACT PERSON _____ PHONE ( ) _____ FAX ( ) _____

LOCATION OF ASSEMBLY _____

DOWNSTREAM PROCESS _____ DCVA ☐ RPBA ☐☐☐ PVBA ☐☐ OTHER _____

NEW INSTALL☐ EXISTING☐ REPLACEMENT☐ OLD SER. #_____ PROPER INSTALLATION? YES ☐ NO ☐

MAKE OF ASSEMBLY_____ MODEL _____ SERIAL NO. _____ SIZE _____

INITIAL TEST **PASSED** ☐ **FAILED** ☐	DCVA / RPBA CHECK VALVE NO.1 **LEAKED** ☐ _____**PSID**	DCVA / RPBA CHECK VALVE NO.2 LEAKED ☐ _____PSI	**RPBA** OPENED AT ____ PSID #1 CHECK _____PSID AIR GAP OK? _____	**PVBA/SVBA** AIR INLET OPENED AT_____PSID DID NOT OPEN ☐
NEW PARTS AND REPAIRS	CLEAN REPLACE ☐ ☐_____ ☐ ☐_____ ☐ ☐_____ ☐ ☐_____	CLEAN REPLACE ☐ ☐_____ ☐ ☐_____ ☐ ☐_____ ☐ ☐_____	CLEAN REPLACE ☐ ☐_____ ☐ ☐_____ ☐ ☐_____ ☐ ☐_____	CHECK VALVE HELD AT _____PSID LEAKED ☐ _____ CLEANED ☐ REPAIRED ☐
TEST AFTER REPAIRS **PASSED** ☐ **FAILED** ☐	LEAKED ☐ _____PSID	LEAKED☐ ☐ _____PSID	OPENED AT ____PSID #1 CHECK_____PSID	AIR INLET _____ PSID CHK VALVE _____PSID

AIR GAP INSPECTION:
Required minimum air gap separation provided? Yes ☐☐ No☐ **Detector Meter Reading** _____

REMARKS: _____ LINE PRESSURE _____PSI

_____CONFINED SPACE? _____

I certify that this report is accurate, and I have used WAC 246-290-490 approved test methods and test equipment.

TESTERS SIGNATURE: _____ CERT. NO. _____DATE _____/_____/_____

TESTERS NAME PRINTED: _____ TESTERS PHONE # ( ) _____

REPAIRED BY: _____DATE _____/_____/_____

FINAL TEST BY:_____ CERT. NO. _____ DATE _____/_____/_____

CALIB/VERIF DATE __ /__ /___ GAUGE # _____ MODEL_____

SERVICE RESTORED? YES ☐ NO ☐

(SPECIALTY) PLUMBER CERT. NO. _____ CONTRACTOR LICENSE NO. _____

CUSTOMER INFORMATION PACKET

DEAR CUSTOMER:

Under Washington State Law, Lake Meridian Water District has the responsibility to protect the public water supply from possible contamination due to cross-connections. A cross-connection is the connection point of two otherwise separate water systems, one of which is public containing safe drinking water and the other which is private containing water of questionable safe drinking quality, such as steam, gas or chemicals.

Cross-connection control is necessary because of physics. Water always flows towards the path of least resistance or to the point of lowest pressure. It is logical to assume that because water is under pressure, it can only flow in one direction, but this assumption is wrong. Under certain circumstances, such as loss or reduced pressure, water can and will flow backwards.

Imagine what could potentially happen if a water main broke just as your neighbor began to use a water hose to spray insecticide or flush a car radiator. Or the fire district turned on several hydrants to fight a fire just as someone was dispensing carbonated water from a soft drink machine. These contaminants could be siphoned into the public water system.

The District cross-connection program consists of inspections to identify actual or potential cross-connections, requiring the installation of needed assemblies to mitigate the hazard, and the testing of installed backflow prevention assembles on an annual basis.

Generally the risk to the public water supply can be assessed as either High Health Hazard or as a Low Health Hazard.

A High Health Hazard is one in which a substance could impair the quality of the potable water supply and create an actual public health hazard through the poisoning or spread of disease by sewage, industrial liquids or waste.

A Low Health Hazard is one in which a substance could cause an impairment of the quality of the potable water supply to the degree that it does not create a hazard to public health, but does adversely and unreasonably affect the aesthetic qualities for domestic use.

The District has no regulatory responsibility or authority over the installation and operation of the customer's plumbing system. The customer is solely responsible for compliance with all applicable regulations and for the prevention of contamination of his plumbing system from sources within his/her premises. Any action taken by the District to survey plumbing, inspect or test backflow prevention assemblies, or to require premises isolation, installation of a DCVA or RPBA on the service line, is solely for the purpose of reducing the risk of contamination of the District's public water system.

Any action taken by the District shall not be construed as guidance on the safety or reliability of the customer's plumbing system. Installation of backflow prevention assemblies shall be in accordance with the most recently published edition of the Pacific Northwest Section, American Water Works Association Cross Connection Control Manual.

The District will notify each customer at least 30 days before the due date for each required inspection and or testing of any backflow devices by a certified Department of Health Cross-Connection Control Specialist (CCS) and/or a Backflow Assembly Tester (BAT). The District has on hand a list of certified testers.

The inspection or test reports conducted by the CCS and/or BAT are to be received by the District within 15 days following the due date. After this time enforcement actions may be taken.

TYPE OF FACILITY/REQUIRED DEVICE
AUXILIARY WATER SUPPLY

Any water supply on or available to a premise in addition to the District's approved potable water supply. Backflow protection requires an Air Gap or the installation of an approved Reduced Pressure Backflow Assembly downstream of the meter on the customer's property.

WATER RE-USE SYSTEMS
Reclaimed water can be systems that use treated sewage effluent, Stormwater reuse, and Graywater systems from untreated household wastewater that has not come in contact with toilet or food processing waste. All classes of reclaimed water are considered as a high health hazard and NO Direct connects to the District system will be allowed.

FIRE PROTECTION SYSTEMS
High-Hazard
This includes all fomite systems, systems with an auxiliary water supply connected to the fire system and systems with chemical additives. Backflow protection will be by a Reduced Pressure Backflow Assembly located at the service connection.

Low-Hazard
Are all other fire systems and require a Double Check Valve Assembly at the service connection.

SEWAGE LIFT/PUMPING STATIONS
All sewer lift and grinder pump stations pose a sever health hazard due to the potential presence of human pathogens. Backflow protection will be with an approve Reduce Pressure Backflow Assembly located at the service connection.

ACCESS RESTRICTED OR DENIED
The District must consider the health hazard to be severe unless it has the knowledge to make an assessment otherwise. Without the health hazard evaluation, backflow prevention is with an approved air gap of a reduced pressure backflow assembly.

CAR WASHES
Most automatic car washes use re-circulating water with chemical additives in heated water. The system is considered high hazard because of these chemicals and bacteriological contaminants in the water. Backflow protection will be with a reduced pressure backflow assembly.

HOSPITALS, MEDICAL CENTERS, VETERINARY CLINICS, DENTAL CLINICS, MEDICAL CLINICS AND NURSING HOMES
The primary health hazard is the presence of waterborne disease transmitted in the feces, urine, and blood of humans and animals. The secondary health hazard is from the numerous chemicals used in these facilities. Backflow protection will be with an approved reduced pressure backflow assembly.

Laboratories
Laboratories are facilities using and handling chemicals and bacteriological materials such as medical, biological, chemical, environmental, and material testing laboratories including government agencies and schools.

All laboratories should be considered a high health hazard due to storage, use and/'or processing of chemicals and soils, liquid's or products containing bacteria. An approved reduced pressure backflow assembly will be utilized for backflow prevention.

Lawn Irrigation Systems
Irrigation systems can be either assessed as either a low or high health hazard. High health hazard systems contain pumps or injectors for addition of chemicals. An approve air gap or reduced pressure backflow assembly is needed on these systems.

A low health hazard is assessed to all other irrigation systems. An approved double check valve assembly is the minimum approved.

Retail Centers
Due to the high probability of changes in water use by tenants, retail centers are considered a high health hazard. An approved reduced pressure backflow assembly shall be installed to protect against backflow.

Recreational Vehicle Parks
Recreational vehicle parks usually contain a transient population that significantly increases the probability of cross-connections due to plumbing that has not been approved. As such a high health hazard is assessed and protection will be with a reduced pressure backflow assembly.

Heat Exchangers/Solar Hot Water Systems
Heat exchangers physically separate one medium from another and either heat or cool a medium by transferring energy between the two mediums across an enlarged surface. Backflow conditions exist when a leak develops in the piping or tank walls separating potable from non-potable water. Backflow protection will utilize an approved reduce pressure backflow assembly.

Buildings Over 30 Inches In Height
Whenever the hydraulic gradient (water pressure) falls below the elevation of a plumbing fixture, backsiphonage conditions occur. This increased probability of backflow conditions elevates the risk for structures over thirty feet in height. Backflow protection will be with an approved reduced pressure backflow assembly.

Tanker Trucks
Tanker trucks are assessed a high health hazard, the same as an unapproved auxiliary source. Chemical and bacteriological contaminants could be present in any tank. Backflow protection will be with an approved air gap or an approved reduced pressure backflow assembly. Additionally tankers may only connect to the District water supply after obtaining a permit and only at specific locations.

Sewer Flushing
When sewer or storm lines are flushed, an approved air gap separation will be maintained to protect the potable water supply. If al all possible tanker trucks should be utilized to flush lines.

Other
In cases where there has been a history of repeating the same or similar cross-connections or backflows, even though these conditions have been removed or disconnected, a high health hazard is assessed. Backflow prevention will be with an approved reduced pressure backflow assembly.

In cases where intricate plumbing makes it impractical to ascertain whether or not a cross-connection exists, or where any fixture is subject to being submerged, a high health hazard is assessed and protection will be with a reduced pressure backflow assembly.

INSTALLATION STANDARDS
All backflow preventers relied upon by the District to protect the public water system shall meet the definition of “approved backflow preventer” as contained in WAC 246-290-010. The District will maintain a current list of assemblies approved for installation in Washington State.

Installation standards contained in the most recently published edition of the Pacific Northwest Section, American Water Works Association Cross-Connection Manual or the University of Southern California Foundation for Cross-Connection Control and Hydraulic Research Manual shall be followed unless the manufacturer's requirements are more stringent.

Special considerations to note for each type of assembly are:

Air Gap (AG)

- Separations are measured vertically and must be at least twice the inside diameter of the inlet pipe, but never less than one-inch.
- An obstruction around or near an AG may restrict flow of air into the outlet pipe and nullify the effectiveness in preventing backsiphonage. When affected by sidewalls the vertical separation must be at least three (3) times that of the inside pipe diameter.

Reduced Pressure Backflow Assembly (RPBA)

- The RPBA must be installed above ground or maximum flood level whichever is greater.
- Because of the inherent design of a RPBA, fluctuating water supply pressure may cause nuisance dripping and potential fouling on the assembly. If located inside a building drainage should be provided for these discharges.

Double Check Valve Assembly (DCVA)

- Unless evaluated and approved otherwise a DCVA is only to be installed in the horizontal position.
- If installed in a pipe or meter box, adequate room must be provided for testing.
- Plugs must be installed in the test cocks to reduce the risk of ground water being siphoned through a leaking test cock.
- Sufficient drainage must be provided to prevent the assembly from becoming submerged.
- The DCVA must be protected from freezing, other severe weather and physical damage.

Appendix F

Letters

Lake Meridian
WATER DISTRICT

27224 144th Avenue S.E.
Kent, WA 98042-9058
(253) 631-3770

Date

Customer
Customer Address Line 1
Customer Address Line 2

Service Address: Customer Account Number:
Service Description: Service Number:

Re: Request to Complete Water-Use Questionnaire

Dear Water System Customer:

Washington State drinking water regulations, WAC 246-290-490, require public water systems to develop and implement cross-connection control programs. Cross-connection control programs help protect public health by preventing contamination of the drinking water as it is delivered to water system customers. The attached Customer Information Packet explains what a cross connection is, describes typical household cross connections and what you can do to help protect your drinking water.

As part of our efforts to keep your drinking water safe, we are conducting a cross-connection control hazard survey of residential customers served by our system. The purpose of the survey is to help us determine if any of our residential customers have special plumbing or activities on their premises that could increase the risk of contamination to our water system.

For most residential customers, the cross-connection control hazard posed to the public water system is minimal. This is because your household plumbing was installed in compliance with the Uniform Plumbing Code. The Uniform Plumbing Code generally provides adequate protection of your water potable water piping and our public water distribution system from cross connections. However, a few customers with special plumbing or activities on their premises may pose an increased health risk to other customers served by our system. These customers may need to have a backflow preventer installed on their service lines or provide alternate protection to prevent contamination of the public water system.

Please complete the attached questionnaire by checking the applicable boxes on the table; and return the completed, signed questionnaire by {insert date} to the address shown on the letterhead.

Thanks in advance for filling out the questionnaire. We appreciate your cooperation in helping us to protect the drinking water we deliver to our customers. If you have any questions about the survey or how to fill out the questionnaire, please contact me at (253) 631-3770. We will review your questionnaire and determine whether we need to contact your for further information.

Sincerely,

Name
CCC Program Manager

Lake Meridian
WATER DISTRICT

27224 144th Avenue S.E.
Kent, WA 98042-9058
(253) 631-3770

Date

Customer
Customer Address Line 1
Customer Address Line 2

Service Address: Customer Account Number:
Service Description: Service Number:

Re: Request to Install Backflow Prevention Assembly

Dear Water System Customer:

Washington State drinking water regulations, WAC 246-290-490, require public water systems to develop and implement cross-connection control programs. Cross-connection control programs protect public health by preventing contamination of the drinking water as it is delivered to people served by the water system. **The purpose of this letter is to inform you of a requirement to install a backflow assembly.**

Our water system's policy considers each of our customers plumbing systems, starting from the termination of the service pipe downstream of the water meter, to pose a potential cross-connection hazard to the public water system. Our policy requires a backflow prevention assembly commensurate with the degree of hazard to be installed on the service line. The purpose of this backflow prevention assembly is to isolate your plumbing system from the water distribution system. We've attached a copy of Resolution {**insert number**} describing our cross-connection control policy.

We have received the cross-connection control survey report submitted by your Cross-Connection Control Specialist (CCS). The survey assessed the overall public health hazard posed by your plumbing system (and water use) to the public water system. We agree with the assessment made by the CCS. **Based on the assessment, a Department of Health-approved {insert type of assembly} is required to be installed on your service line (at a location downstream of the water meter).**

Please make arrangements for the assembly to be installed by {**insert date**} or when your plumbing system is modified, whichever comes sooner. We realize that this expense was not anticipated, so if you are unable to comply with this deadline, please contact us to discuss an alternative date. We've enclosed a copy of our standard installation drawings for this type of assembly. Your CCS should oversee the installation of the assembly to ensure compliance with these standards.

We appreciate your cooperation in this matter. If you have any questions, please contact me at (253) 361-3770.

Sincerely,

Name
CCC Program Manager

Lake Meridian
WATER DISTRICT

27224 144th Avenue S.E.
Kent, WA 98042-9058
(253) 631-3770

Date

Customer
Customer Address Line 1
Customer Address Line 2

Service Address: Customer Account Number:
Service Description: Service Number:

Re: Request to Submit Test of Backflow Prevention Assembly

Dear Water System Customer:

Washington State drinking water regulations, WAC 246-290-490, require public water systems to develop and implement cross-connection control programs to protect the drinking water supply from contamination. As part of this program, backflow prevention assemblies have been installed on your water service(s) and/or within your plumbing system to protect our water distribution system. Annual testing is required to ensure that the backflow prevention assemblies properly function.

The purpose of this letter is to request that you now arrange for the annual testing of the reduced pressure principle (RPBA), double check valve (DCVA), and/or pressure vacuum breaker (PVBA or SVBA) assembly/assemblies described on the attached list. A Washington State Department of Health certified backflow assembly tester (BAT) must conduct the testing. **Testing results should be sent to the address above and submitted by {insert date}.**

For your convenience, we are enclosing a list of backflow assembly testers pre-approved to test assemblies that protect our water system. Test report forms are also enclosed. The test report forms need to be properly completed by the BAT, signed by the customer/assembly owner, and returned to us.

Note: the Uniform Plumbing Code in effect in Washington also requires annual assembly testing. In addition to the testing required for the assemblies that protect the public water system (i.e., identified on the attached list), you may wish to have all of the remaining assemblies within your premises tested at this time.

If you have any questions, please feel free to contact me at (253) 631-3770.

Sincerely,

Name
CCC Program Manager

Lake Meridian
WATER DISTRICT

27224 144th Avenue S.E.
Kent, WA 98042-9058
(253) 631-3770

Date

Customer
Customer Address Line 1
Customer Address Line 2

Service Address: Customer Account Number:
Service Description: Service Number:

RE: Testing of Backflow Prevention Assembly - Second Notice
First Notice Date: _____ Second Notice Date: _____

Dear Water System Customer:

Washington State drinking water regulations, WAC 246-290-490, require public water systems to implement cross-connection control programs to protect the drinking water supply from contamination. As part of this program, backflow prevention assemblies were installed on your service or within your premises to protect our water distribution system from contamination. The WAC requires these assemblies to be tested annually to verify that they are in good working condition.

The assembly/assemblies identified in our letter of {**insert date**} (copy attached) must be tested by a Department of Health certified Backflow Assembly Tester (BAT) upon installation and annually thereafter. This requirement is a condition of our system continuing to supply potable water to your premises. **According to our records, as of today's date, you have not submitted the requested Assembly Test Report(s).** If you believe this is in error, please contact me as soon as possible at the number below.

If you have not submitted the Assembly Test Reports as requested, please:

- Immediately employ a DOH-certified BAT to test the listed assembly/assemblies; and
- Submit a signed copy of the completed Assembly Test Report(s) to me at the address above **within 15 days of the date of this letter**.

Your cooperation in this matter is essential for protecting your drinking water supply and the public water supply from contamination. Failure to comply with the annual assembly testing requirement will trigger an enforcement action by our system. Enforcement could include a shut-off of your water service.

If you have any questions, please contact me at (253) 631-3770.

Sincerely,

Name
CCC Program Manager

Appendix G

Annual Summary

PUBLIC WATER SYSTEM CROSS-CONNECTION CONTROL ACTIVITIES
ANNUAL SUMMARY REPORT FOR YEAR 2022

Part 1: Public Water System (PWS) and Cross-Connection Control Specialist (CCS) Information

PWS ID: 41900B	PWS Name: Lake Meridian Water District	County: King
Provide name and Certification Number of CCS who develops and implements your CCC program.		
CCS Name (Last, First & MI): ,		CCS Phone: (253) 631-3770
CCS Cert. No.:	BAT Cert. No. (if applicable):	
CCS is (check one): PWS owner or employee ☐	On contract to PWS ☐	Volunteer or other ☐

Part 2: Status of Cross-Connection Control (CCC) Program

PWS has: A written CCC program Y ☒ N ☐ CCC implementation activities Y ☒ N ☐

(Written program may be a separate document or part of water system plan or small water system management program.)

Please provide information regarding PWS's specific CCC Program Elements. Check one box in each column.

Program Element Number	Description of Element [See WAC 246-290-490(3)]	This Program Element is Currently:	
		Included in Written Program	Being Implemented or is Completed
1	Legal Authority Established	Y ☐ N ☐	Y ☐ N ☐
2	Hazard Evaluation Procedures and Schedules	Y ☐ N ☐	Y ☐ N ☐
3	CCC Procedures and Schedules	Y ☐ N ☐	Y ☐ N ☐
4	Certified CCS Provided	Y ☐ N ☐	Y ☐ N ☐
5	Backflow Preventer Inspection and Testing	Y ☐ N ☐	Y ☐ N ☐
6	Testing Quality Control Assurance Program	Y ☐ N ☐	Y ☐ N ☐
7	Backflow Incident Response Procedures	Y ☐ N ☐	Y ☐ N ☐
8	Public Education Program	Y ☐ N ☐	Y ☐ N ☐
9	CCC Records	Y ☐ N ☐	Y ☐ N ☐
10	Reclaimed Water Permit	Y ☐ N ☐ N/A ☐	Y ☐ N ☐ N/A ☐

Part 3A: System Characteristics at End of 2022

Indicate the number of connections of each type that the PWS serves (whether or not they are protected by backflow preventers). Estimate if necessary.

Type of Service Connection	Number
Residential (as defined by PWS)	
All Other (include dedicated fire sprinkler and irrigation lines and PWS-owned facilities such as water and wastewater treatment plants and pumping stations, parks, piers and docks)	
Total Number of Connections	

Part 3B: Cross-Connection Control for High-Hazard Premises or Systems Served by the PWS

If PWS does not serve any high-hazard premises or systems, check here ☐ and go to Part 4.

- Complete all cells. Count only premises PWS serves water to. Enter zero (0) in cells if PWS does not serve such premises.
- Estimate number of connections served if necessary (OK to use phone book).
- Hazard evaluations do not need to be done to complete this table.

Type of High-Hazard Premises or Systems [WAC 246-290-490(4)(b)]	Number of Connections at end of 2022			
	Being Served Water by PWS[1]	With Premises Isolation by AG/RP[2]	With Premises Isolation AG/RP Inspected or Tested[3]	Granted Exception from Mandatory Premises Isolation
Agricultural (farms and dairies)				
Beverage bottling plants (including breweries)				
Car washes				
Chemical plants				
Commercial laundries and dry cleaners				
Both reclaimed water and potable water provided				
Film processing facilities				
Dedicated fire protection systems with chemical addition or using unapproved auxiliary supplies				
Food processing plants (including canneries, slaughter houses, rendering plants)				
Hospitals, medical centers, nursing homes, veterinary, medical and dental clinics, and blood plasma centers				
Separate irrigation systems using purveyor's water supply and chemical addition[4]				
Laboratories				
Metal plating industries				
Mortuaries				
Petroleum processing or storage plants				
Piers and docks				
Radioactive material processing plants or nuclear reactors				
Survey access denied or restricted				
Wastewater lift stations and pumping stations				
Wastewater treatment plants				
Unapproved auxiliary water supply interconnected with potable water supply				
Other high-hazard premises (list)[5]				
Totals				

[1]Count multiple connections or parallel installations as separate connections.

[2] Count only those connections with AG or RP installed for premises isolation. Do not include connections with only in-premises protection, or those with DCVA/DCDAs installed for premises isolation.

[3] Count only those connections ***whose premises isolation preventers*** were tested or inspected during year 2022

[4] For example, parks, playgrounds, golf courses, cemeteries, estates, etc.

[5] Premises with hazardous materials or processes (requiring isolation by AG or RP), such as: aircraft and automotive manufacturers, pulp and paper mills, metal manufacturers, military bases, and wholesale customers that pose a high hazard to the PWS. May be grouped together in categories, e.g.: other manufacturing, or other commercial. ***If needed, attach additional sheet giving same information as requested by table.***

Part 4A: Backflow Preventer Inventory and Testing Data During Year 2022

- Complete all cells. Enter zero (0) if there are no backflow preventers in the category.
- **Count only the backflow preventers that the PWS relies upon for protection of the distribution system.** ***If your records do not distinguish between premises isolation and in-premises protection preventers, enter all data in Premises Isolation section and check the box.***
- Count AVBs on irrigation systems only. **If you do not track AVBs, check box above the "AVB" column.**
- Count multiple tests or failures for any particular backflow preventers as one test or failure for that backflow preventer.
- Multiple Service or Parallel Connections**:** count each assembly separately.
- Assemblies on Dedicated Fire or Irrigation Lines: count as Premises Isolation Assemblies. **If PWS does not track AVBs check here** ☐

	Backflow Preventer Category and Testing/ Inspection Information	**Air Gap**	**RPBA**	**RPDA**	**DCVA**	**DCDA**	**PVBA**	**SVBA**	**AVB**
Premises Isolation, including preventers isolating PWS-owned facilities. ***If In-Premises Protection preventers are also included, check here*** ☐									
Rows 1 – 3 pertain ONLY to Premises Isolation preventers in service at beginning of 2022									
1	**In service at beginning of 2022**								
2	Inspected and/or tested in 2022[1]								
3	Failed Inspection or test in 2022								
Rows 4 – 6 pertain ONLY to NEW Premises Isolation preventers installed during 2022									
4	New preventers installed in 2022								
5	Inspected and/or Tested in 2022								
6	**Failed inspection or test in 2022**								
Premises Isolation Total at end of 2022									
Installed for In-Premises Protection (Fixture Protection or Area Isolation), including preventers within PWS-owned facilities.									
Rows 7 – 9 pertain ONLY to In-Premises Protection preventers in service at beginning of 2022									
7	**In service at beginning of 2022**								
8	Inspected and/or Tested in 2022								
9	Failed Inspection or Test in 2022								
Rows 10 – 12 pertain ONLY to NEW In-Premises Protection preventers installed during 2022									
10	New preventers installed in 2022								
11	Inspected and/or Tested in 2022								
12	**Failed inspection or test in 2022**								
In-Premises Protection Total at end of 2022									
Grand Total at end of 2022									

[1] Initial and/or routine annual inspection (for proper installation and approval status) and/or test (for testable assemblies only using DOH/USC test procedures).

[2] Includes preventers installed on connections where backflow prevention was not previously required and any preventers that replaced preventers those in service at beginning of 2007. Replacement preventers may be of a different type than the original.

[3] Total installed at end of 2007 can't be more than preventers in service at beginning of 2007 plus those installed during 2007. May be less due to changes in preventer type and preventers taken out of service during 2007.

Part 4B: Other Implementation Activities in 2022

Complete all cells. Enter zero (0) if not applicable.

Activity or Condition	Number
New services connections evaluated for cross-connection hazards to PWS in 2022.	
New services connections requiring backflow protection to protect PWS.[1]	
Existing services connections evaluated for cross-connection hazards to PWS in 2022.	
Existing services connections requiring backflow protection to protect PWS.[1, 2]	
Exceptions granted to high-hazard premises per WAC 246-290-490(4)(b) in 2022.	
CCC Corrective enforcement actions taken by PWS during 2022.	

[1] **Include services where either premises isolation or in-premises preventers were required to protect the PWS.**
[2] **Include existing services that need new, additional or higher level backflow prevention.**
[3] **A DOH Exception to Hazard Premises Form *must* be attached for each exception granted during the year.**
[4] "Enforcement actions" mean actions taken by the PWS (such as water shut-off, PWS installation of backflow preventer) when the customer fails to comply with PWS's CCC requirements.

Part 5: Backflow Incidents, Risk Factors and Indicators during 2007

	Backflow Incidents, Risk Factors and Indicators during 2007	Number (Enter 0 if none)	Check if Data Not Available
Backflow Incidents during 2022			
1	Backflow incidents that contaminated the PWS.[5]		☐
2	Backflow incidents that contaminated the customer's drinking water system ***only***.[5]		☐
Risk Factors for Backflow during 2022			
3	Distribution main breaks per 100 miles of pipe.		☐
4	Low pressure events (<20 psi in PWS distribution system).		☐
5	Water outage events.		☐
Indicators of Possible Backflow during 2022			
6	Total health-related complaints received by PWS.[6]		☐
7	Received during BWA or PN events.[7]		☐
8	Received during low pressure or water outage events.		☐
9	Total aesthetic complaints (color, taste, odor, air in lines, etc.).		☐
10	Received during BWA or PN events.[7]		☐
11	Received during low pressure or water outage events.		☐

[5] Complete and submit a Backflow Incident Report form for each known backflow incident.
[6] Such as stomach ache, headache, vomiting, diarrhea, skin rashes, etc.
[7] "**BWA**" means ***Boil Water Advisory*** and **"PN"** means ***Public Notification*** for water quality reasons.

Part 6: Comments and Clarifications

Enter comments or clarifications to any of the information included in this report.
Note for on-screen completion: Comments will not “wordwrap” from one line to the next. Press <Enter> to continue on new line. Maximum length of each comment is 255 characters, including spaces.

Part No.	Comment

Part 7: Report Completion Information

Enter dates in MM/DD/YYYY format.

I certify that the information provided in this CCC Activities Report is complete and accurate to the best of my knowledge.		
CCC Program Administrator Name (Print):		Title:
Signature:		Date:
Phone: (___) ___-____	E-mail: _____@_____	
I have reviewed this report and certify that the information provided is complete and accurate to the best of my knowledge.		
General Manager Name (Print):		Title:
Signature:	Op. Cert. No.:	Date:

CROSS-CONNECTION CONTROL PROGRAM SUMMARY

For 2022

Part 1: Public Water System (PWS) Identification

PWS ID: 41900B	PWS Name: Lake Meridian Water District	County: King

Part 2: Cross-Connection Control (CCC) Program Characteristics

A. TYPE OF PROGRAM CURRENTLY IMPLEMENTED

Type of Program	*Check One*
Premises isolation only.	☐
Combination program: reliance on both premises isolation and in-premises protection.	☒
In transition from a combination program to a premises isolation only program.	☐

B. Coordination with Local Administrative Authority (LAA) on Cross-Connection Issues

Indicate the status of coordination with LAAs in your service area. The LAA is the entity that enforces the Uniform Plumbing Code. ***Check one box in each of last 3 columns for each LAA in your service area***.

LAA No.	Name of LAA[1] (e.g., the City or County Building Department)	PWS currently: Coordinates with LAA	PWS currently: Has Written Agreement with LAA	If not coordinating, did LAA Decline to Coordinate?
1	City of Covington	Y ☐ N ☐	Y ☐ N ☐	Y ☐ N ☐
2	City of Kent	Y ☐ N ☐	Y ☐ N ☐	Y ☐ N ☐
3	King County	Y ☐ N ☐	Y ☐ N ☐	Y ☐ N ☐
4	City of Auburn	Y ☐ N ☐	Y ☐ N ☐	Y ☐ N ☐
5		Y ☐ N ☐	Y ☐ N ☐	Y ☐ N ☐

[1] If more than 5 LAAs, attach separate sheet giving the above information.

C. Corrective or Enforcement Actions Available to the Purveyor

Type of Corrective Action	Indicate Whether Available	Most Often Used (Check one)
Denial or discontinuance of water service.	Y ☒ N ☐	☐
purveyor installs backflow preventer and bills customer.	Y ☒ N ☐	☐
Assessment of fines (in addition to elimination or control of cross-connection).	Y ☒ N ☐	☐
Other corrective actions (describe below):	Y ☐ N ☐	☐

D. CCC Program Typical Responsibilities

Typical responsibilities *do not* include enforcement action related procedures or circumstances.

CCC Program Activity	Responsible Party (Check one per row)	
	Customer	**Purveyor**
Hazard Evaluation by DOH-certified CCS.	☒	☐
Backflow preventer (BP) ownership.	☒	☐
BP installation.	☒	☐
BP *initial* **inspection (for proper installation – all BPs).**	☒	☐
BP *initial* **test (for testable assemblies).**	☒	☐
BP *annual* **inspection (Air Gaps and AVBs).**	☒	☐
BP *annual* **test (for testable assemblies).**	☒	☐
BP maintenance and repair.	☒	☐

E. Backflow Protection for Fire Protection Systems

Please remember to enter number of days allowed if you require retrofitting.

PWS coordinates with ***LAA*** on CCC issues for fire protection systems (FPS).	Y ☒	N ☐	N/A ☐
PWS coordinates with ***local Fire Marshal*** on CCC issues for FPS.	Y ☒	N ☐	N/A ☐
PWS ensures backflow prevention is installed before serving ***new*** connections with FPS.	Y ☒	N ☐	
PWS requires retrofits to ***high***-hazard FPS.	Y ☒ (No. of days allowed: _____)	N ☐	N/A ☐
PWS requires retrofits to ***low***-hazard FPS.	Y ☒ (No. of days allowed: _____)	N ☐	N/A ☐

F. Backflow Protection for Irrigation Systems

Minimum level of backflow prevention required on irrigation systems ***without*** chemical addition.	Not Addressed ☐	AVB ☒	PV/SVBA ☐ DCVA ☐ RPBA ☐
PWS currently inspects AVBs upon ***initial*** installation.	Y ☒	N ☐	N/A ☐
PWS currently inspects AVBs upon repair, reinstallation or relocation.	Y ☒	N ☐	N/A ☐

G. Used Water

PWS prohibits, by ordinance, rules, policy or agreement, the intentional return of used water (e.g., for heating or cooling) into the distribution system.		**Y** ☒ **N** ☐
If not prohibited at present, date plan to prohibit.	**Date (mm/dd/yyyy):**	**N/A** ☐
Current number of service connections returning used water to distribution system.		

H. Backflow Protection for Unapproved Auxiliary Water Supplies1 NOT Interconnected with PWS

Indicate the **minimum** backflow preventer and type of protection required for service connections having unapproved auxiliary water supplies *when they are NOT interconnected to the PWS.* Check only one per row.

Existing service connections.	None ☐ DCVA ☐ RPBA ☒ AG ☐
Type of protection required.	None ☐ In-premises protection ☒ Premises isolation ☐
New service connections.	None ☐ DCVA ☐ RPBA ☒ AG ☐
Type of protection required.	None ☐ In-premises protection ☒ Premises isolation ☐

I. Backflow Protection for Tanker Trucks and Temporary Water Connections

Minimum level of backflow protection (installed on or associated with the truck) required for tanker trucks taking water from PWS.	AG ☐ DCVA ☒ RPBA ☐ Not specified ☐ Tanker trucks not allowed ☐
PWS requires tanker trucks to obtain water at designated filling sites each equipped with permanently installed backflow preventer(s).	Y ☒ (Min. site protection: DCVA ☐ RPBA ☐) N ☐ N/A ☐ No sites provided ☐
PWS currently accepts tanker trucks approved by other PWSs without further inspection or testing.	Y ☐ N ☐ N/A ☐
Minimum level of backflow protection required for temporary water connections (e.g., for construction sites).	AG ☐ DCVA ☒ RPBA ☐ Not specified ☐ Temp. connections not allowed ☐
PWS requires testing each time the temporary connection backflow preventer is relocated.	Y ☐ N ☒ N/A ☐ (Temp. connections not allowed)
PWS provides approved backflow preventer for temporary connections.	Y ☒ N ☐ N/A ☐ (Temp. connections not allowed)

J. Backflow Protection for Non-Residential Connections

For each category shown, indicate whether the District has non-residential connections of that type and the **minimum** level of ***premises isolation*** backflow protection required (whether or not that type of customer currently exists).

Type of Connection	**PWS has Customers of this Type**	**Minimum Premises Isolation Backflow Protection Required**
Commercial	Y ☐ N ☐	Not required ☐ DCVA ☐ RPBA ☐
Industrial	Y ☐ N ☐	Not required ☐ DCVA ☐ RPBA ☐
Institutional	Y ☐ N ☐	Not required ☐ DCVA ☐ RPBA ☐
Other (specify): _____	Y ☐ N ☐	Not required ☐ DCVA ☐ RPBA ☐
Other (specify): _____	Y ☐ N ☐	Not required ☐ DCVA ☐ RPBA ☐

K. Backflow Protection for Wholesale Customers
Indicate whether the District requires backflow protection at interties with wholesale customers (other PWSs).

Type of Intertie	**District has (plans to have) Customers of this Type**	**Backflow Protection Required** (If protection is required, indicate minimum level)
Existing	Y ☐ N ☐	Not specified/Not required ☐ Always required ☐ Required only if purchaser's CCC program is inadequate ☐ Minimum required (if applicable): DCVA ☐ RPBA ☐
New	Y ☐ N ☐	Not specified/Not required ☐ Always required ☐ Required only if purchaser's CCC program is inadequate ☐ Minimum required (if applicable): DCVA ☐ RPBA ☐

Part 3: CCC Program Record-Keeping and Inventory

Indicate the type or name of computer software used by the District to track CCC records.

BMI ☐ BPMS ☐ Engsoft ☐ Tokay ☐ Other commercial CCC software ☐ (specify): _____
Custom developed for or by PWS[1] ☐ Other non-CCC software (e.g., Excel) ☐ None Used ☐

[1] Do not include customized commercial CCC software. Indicate these on line above.

Part 4: Comments and Clarifications
Enter comments or clarifications to any of the information included in this report.

Part No.	Comment

Part 5: CCC Program Summary Completion Information

Enter dates in MM/DD/YYYY format.

I certify that the information provided in this CCC Program Summary is complete and accurate to the best of my knowledge.		
CCC Program Administrator Name (Print):		**Title:**
Signature:		**Date:**
Phone: (___) ___-____	**E-mail: _____@_____**	
I certify that the information provided in this report accurately represents the status and description of this water system's CCC Program.		
General Manager Name (Print):		**Title:**
Signature:	**Op. Cert No:**	**Date:**

EXCEPTIONS TO HIGH HEALTH HAZARD PREMISES ISOLATION REQUIREMENTS FOR 2022 ANNUAL SUMMARY REPORT

Exceptions forms must be completed and submitted to the Department of Health (DOH) with the Annual Summary Report per WAC 246-290-490(4)(b)(iii).

Complete one form for **each** exception that was granted:

- During 2022; or
- Prior to 2022, **if** you didn't submit an Exceptions form to DOH previously (i.e., don't duplicate previously submitted Exception forms).

If your system didn't grant any exceptions in 2022, and you have already submitted forms for exceptions granted prior to 2022, don't complete any Exception forms for 2022.

Part 1: Public Water System (PWS) Information

PWS ID: 41900B	**PWS Lake Meridian Water District**	**County: King**

Part 2: Premises Information

Name of Premises	
Service Address	
Premises Type or Category – Refer to Table 9 of WAC 246-290-490(4)(b)	
Additional Information or Description of Premises to help explain why exception is appropriate:	

Part 3: Information Regarding Exception to Premises Isolation

Enter dates in MM/DD/YYYY format.

Date of Hazard Evaluation	
Date Exception Granted	
Expiration Date of Exception (if any)	
Date of Next Hazard Evaluation	

Part 4: Justification for not Requiring Premises Isolation Using AG, RPBA or RPDA

- The reasons for not requiring mandatory premises isolation shown in the table are typical examples. *purveyors are not required to follow or apply any of these reasons.*
- purveyors may provide other reasons consistent with WAC 246-290-490(4)(b)(ii), i.e., no hazard exists for this particular service.

Reason that the Premises Do Not *Pose a High Health Hazard to PWS*	**Check if Applicable**
Medical/Health Services Facility not having laboratory or similar facilities, e.g., Psychiatric or Counseling Office.	☐
Dental Office having independent water supplies for dental work (no interconnection with purveyor's water system).	☐
"Bottling Plant" without bottling processes, e.g., Warehousing only.	☐
Laundry or Dry Cleaners without cleaning processes on premises, e.g., customer drop-off and/or pick-up only.	☐
Marina/Dock for small boat moorage only (no water/sewage facilities on board).	☐
Agricultural Premises with "hobby farm" (non-commercial) activities only.	☐
Other (please describe):_____	☐
	☐
	☐
	☐

Part 5: Form Completion Information

Enter dates in MM/DD/YYYY format.

I am the Cross-Connection Control Specialist (CCS) who granted this exception to mandatory premises isolation and certify that the information provided is complete and accurate to the best of my knowledge.		
Name (Print):		**CCS Cert. No:**
Signature:		**Date:**
Phone: (___) ___-____	**E-mail: _____@_____**	
I am the Manager* of the PWS and I concur with the granting of this exception to mandatory premises isolation and certify that the information provided is complete and accurate to the best of my knowledge.		
Name (Print):		**Title:**
Signature :	**Op. Cert. No:**	**Date:**

* The person that the CCS reports to or other manager having direct responsibility for and/or oversight of the CCC program. It is not required that this person be in charge of the entire water system.

Appendix H

Backflow Incident Report Form

LAKE MERIDIAN WATER DISTRICT
BACKFLOW INCIDENT REPORT

Reporting Agency: _____ Report Date: _____

Reported By: _____ Title: _____

Mail Address: _____ City: _____

State: _____ Zip Code: _____ Telephone: _____

Date of Incident: _____ Time of Occurrence: _____

General Location (Street, etc.): _____

Backflow Originated From:

Name of Premises: _____

Street Address: _____ City: _____

Contact Person: _____ Telephone: _____

Type of Business: _____

Description of Contaminants:
(Attach Chemical Analysis or MSDS if available)

_____

_____

Distribution of Contaminants:

Contained within customer's premises: Yes: _____ No: _____

Number of persons affected: _____

Effect of Contamination:

Illness Reported: _____

Physical irritation reported: _____

Cross-Connection Source of Contaminant (boiler, chemical pump, irrigation system, etc.):

_____

_____

Cause of Backflow (main break, fire flow, etc.):

_____

_____

Corrective Action Taken to Restore Water Quality (main flushing, disinfection, etc.):

_____

_____

Corrective Action Ordered to Eliminate or Protect from Cross Connection (type of backflow preventer, location, etc.)

_____

_____

Previous Cross-Connection Survey of Premises:

Date: _____ By: _____

Types of Backflow Preventer Isolating Premises:

RPBA: _____ RPDA: _____ DCVA: _____ DCDA: _____ PVBA: _____ SVBA: _____

AVB: _____ Air Gap: _____ None: _____ Other Type: _____

Date of Latest Test of Assembly: _____

Notification of Washington State Health Department:

Date: _____ Time: _____ Person Notified: _____

OPTIONAL - Attach sheets with additional information, sketches, and/or media information, and mail to:

PNWS-AWWA CCC Committee
c/o George Bratton
1252 S. Farragut Drive
Coupeville, WA 98239

Appendix I

Standard Details

Appendix K

WFI Form

THIS PAGE INTENTIONALLY BLANK.

WATER FACILITIES INVENTORY (WFI) FORM

Washington State Department of Health
Division of Environmental Health
Office of Drinking Water

ONE FORM PER SYSTEM

Quarter: 1
Updated: 08/02/2022

Printed: 3/17/2023
WFI Printed For: On-Demand
Submission Reason: Pop/Connect Update

RETURN TO: Central Services - WFI, PO Box 47822, Olympia, WA, 98504-7822 or email wfi@doh.wa.gov

1. SYSTEM ID NO.	2. SYSTEM NAME	3. COUNTY	4. GROUP	5. TYPE
41900 B	LAKE MERIDIAN WATER DISTRICT	KING	A	Comm

6. PRIMARY CONTACT NAME & MAILING ADDRESS	7. OWNER NAME & MAILING ADDRESS
WILLIAM "CHRIS" C. HALL [MANAGER] 27224 144TH AVE SE KENT, WA 98042	KING COUNTY WATER DIST. #111 WILLIAM "CHRIS" C. HALL 27224 144TH AVE SE KENT, WA 98042 SMA - PRIMARY CONTACT
STREET ADDRESS IF DIFFERENT FROM ABOVE	**STREET ADDRESS IF DIFFERENT FROM ABOVE**
ATTN	ATTN
ADDRESS	ADDRESS
CITY STATE ZIP	CITY STATE ZIP

9. 24 HOUR PRIMARY CONTACT INFORMATION		10. OWNER CONTACT INFORMATION	
Primary Contact Daytime Phone: (253) 631-3770 x109		Owner Daytime Phone: (253) 631-3770	
Primary Contact Mobile/Cell Phone: (206) 793-5016		Owner Mobile/Cell Phone:	
Primary Contact Evening Phone: (xxx)-xxx-xxxx		Owner Evening Phone: (xxx)-xxx-xxxx	
Fax:	E-mail: cxxxl@lakemeridianwater.c	Fax: (253) 631-8072	E-mail:

11. SATELLITE MANAGEMENT AGENCY - SMA (check only one)

- ☐ Not applicable (Skip to #12)
- ☒ Owned and Managed
- ☐ Managed Only
- ☐ Owned Only

SMA NAME: King County Water Dist. #111 SMA Number: 135

12. WATER SYSTEM CHARACTERISTICS (mark all that apply)

- ☐ Agricultural
- ☒ Commercial / Business
- ☒ Day Care
- ☒ Food Service/Food Permit
- ☐ 1,000 or more person event for 2 or more days per year
- ☐ Hospital/Clinic
- ☐ Industrial
- ☒ Licensed Residential Facility
- ☐ Lodging
- ☐ Recreational / RV Park
- ☒ Residential
- ☒ School
- ☐ Temporary Farm Worker
- ☒ Other (church, fire station, etc.):

13. WATER SYSTEM OWNERSHIP (mark only one)

- ☐ Association
- ☐ City / Town
- ☐ County
- ☐ Federal
- ☐ Investor
- ☐ Private
- ☒ Special District
- ☐ State

14. STORAGE CAPACITY (gallons)

4,150,000

- SEE NEXT PAGE FOR A COMPLETE LIST OF SOURCES -

WATER FACILITIES INVENTORY (WFI) FORM - Continued

1. SYSTEM ID NO.	2. SYSTEM NAME	3. COUNTY	4. GROUP	5. TYPE
41900 B	LAKE MERIDIAN WATER DISTRICT	KING	A	Comm

15	16 SOURCE NAME	17 INTERTIE	18 SOURCE CATEGORY										19 USE			20	21 TREATMENT						22 DEPTH	23	24 SOURCE LOCATION			
Source Number	LIST UTILITY'S NAME FOR SOURCE AND WELL TAG ID NUMBER. Example: WELL #1 XYZ456 IF SOURCE IS PURCHASED OR INTERTIED, LIST SELLER'S NAME Example: SEATTLE	INTERTIE SYSTEM ID NUMBER	WELL	WELL FIELD	WELL IN A WELL FIELD	SPRING	SPRING FIELD	SPRING IN SPRINGFIELD	SEA WATER	SURFACE WATER	RANNEY / INF. GALLERY	OTHER	PERMANENT	SEASONAL	EMERGENCY	SOURCE METERED	NONE	CHLORINATION	FILTRATION	FLUORIDATION	IRRADIATION (UV)	OTHER	DEPTH TO FIRST OPEN INTERVAL IN FEET	CAPACITY (GALLONS PER MINUTE)	1/4, 1/4 SECTION	SECTION NUMBER	TOWNSHIP	RANGE
S01	InAct 02/12/1998 381501/KENT	38150 1													X		X							0	NE SW	26	22N	05E
S02	WELL NO 1		X												X	Y	X						43	150	SE SE	22	22N	05E
S03	WELL NO 2		X												X	Y	X						44	150	SE SE	22	22N	05E
S04	WELL NO 3		X										X			Y		X	X	X			51	400	NW SW	23	22N	05E
S05	WELL NO 4		X												X	Y	X						144	300	SE SE	22	22N	05E
S06	WELL NO 5		X										X			Y		X	X	X			302	129	SW SW	21	22N	05E
S07	WELL NO 6		X										X			Y		X	X	X			225	750	SE SE	33	22N	05E
S08	WELL NO 9		X										X			Y		X	X	X			393	800	NW NW	35	22N	05E
S09	03350V/AUBURN	03350 V											X			Y				X		X		1750			00N	00E
S10	416508/COVINGTON	41650 8											X			Y	X							1000	SE SE	26	22N	05E
S11	401008/SOOS CREEK	40100 8													X	Y	X							1000	NW NW	27	22N	05E
S12	381501/KENT 256 & 124	38150 1													X	Y	X							1000	NW NE	28	22N	05E
S13	381501/KENT 277 & 124	38150 1													X	Y	X							1000	NE SW	33	22N	05E
S14	381501/KENT 282 & 124	38150 1													X	Y	X							1000	SE NW	33	22N	05E
S15	86880N/Tacoma	86800 N													X	N	X							833	NE SW	17	20N	03E

WATER FACILITIES INVENTORY (WFI) FORM - Continued

1. SYSTEM ID NO.	2. SYSTEM NAME	3. COUNTY	4. GROUP	5. TYPE
41900 B	LAKE MERIDIAN WATER DISTRICT	KING	A	Comm

	ACTIVE SERVICE CONNECTIONS	DOH USE ONLY! CALCULATED ACTIVE CONNECTIONS	DOH USE ONLY! APPROVED CONNECTIONS
25. SINGLE FAMILY RESIDENCES (How many of the following do you have?)		7177	Unspecified
A. Full Time Single Family Residences (Occupied 180 days or more per year)	5745		
B. Part Time Single Family Residences (Occupied less than 180 days per year)	0		
26. MULTI-FAMILY RESIDENTIAL BUILDINGS (How many of the following do you have?)			
A. Apartment Buildings, condos, duplexes, barracks, dorms	106		
B. Full Time Residential Units in the Apartments, Condos, Duplexes, Dorms that are occupied more than 180 days/year	1432		
C. Part Time Residential Units in the Apartments, Condos, Duplexes, Dorms that are occupied less than 180 days/year	0		
27. NON-RESIDENTIAL CONNECTIONS (How many of the following do you have?)			
A. Recreational Services and/or Transient Accommodations (Campsites, RV sites, hotel/motel/overnight units)	0	0	
B. Institutional, Commercial/Business, School, Day Care, Industrial Services, etc.	89	89	
28. TOTAL SERVICE CONNECTIONS		7266	

29. FULL-TIME RESIDENTIAL POPULATION

A. How many residents are served by this system 180 or more days per year? 22387

30. PART-TIME RESIDENTIAL POPULATION	JAN	FEB	MAR	APR	MAY	JUN	JUL	AUG	SEP	OCT	NOV	DEC
A. How many part-time residents are present each month?												
B. How many days per month are they present?												

31. TEMPORARY & TRANSIENT USERS	JAN	FEB	MAR	APR	MAY	JUN	JUL	AUG	SEP	OCT	NOV	DEC
A. How many total visitors, attendees, travelers, campers, patients or customers have access to the water system each month?	632	632	632	632	632	632	632	632	632	632	632	632
B. How many days per month is water accessible to the public?	30	30	30	30	30	30	30	30	30	30	30	30

32. REGULAR NON-RESIDENTIAL USERS	JAN	FEB	MAR	APR	MAY	JUN	JUL	AUG	SEP	OCT	NOV	DEC
A. If you have schools, daycares, or businesses connected to your water system, how many students, daycare children and/or employees are present each month that are NOT already included in the residential population?	30	30	30	30	30	30	30	30	30	30	30	30
B. How many days per month are they present?	20	20	20	20	20	20	20	20	20	20	20	20

33. ROUTINE COLIFORM SCHEDULE	JAN	FEB	MAR	APR	MAY	JUN	JUL	AUG	SEP	OCT	NOV	DEC
	25	25	25	25	25	25	25	25	25	25	25	25

34. NITRATE SCHEDULE	QUARTERLY	ANNUALLY	ONCE EVERY 3 YEARS
(One Sample per source by time period)			

35. Reason for Submitting WFI: Update Boxes 31 and 32 based on WSP review comments. The number of people-days per month for these categories is currently based on the state average of 7.1 persons per day per connection for box 31 and 0.5 persons per day per connection. The District is currently investigating these connections to adjust this number if appropriate.

☒ Update - Change ☐ Update - No Change ☐ Inactivate ☐ Re-Activate ☐ Name Change ☐ New System ☐ Other _____

36. I certify that the information stated on this WFI form is correct to the best of my knowledge.

SIGNATURE: William C. Hall DATE: 3/27/2023

PRINT NAME: WILLIAM. C. HALL TITLE: GENERAL MANAGER

Intentionally left blank

WS ID	WS Name
41900	Lake Meridian Water District

Total WFI Printed: 1

Washington State Department of
Health
Division of Environmental Health
Office of Drinking Water

Water Facilities Inventory (WFI)

Report Create Date:	3/17/2023	
Water System Id(s):	41900B	
Print Data on Distribution Page:	ALL	
Print Copies For:	DOH Copy	
Water System Name:	ALL	
County:	-- Any --	
Region:	ALL	
Group:	ALL	
Type:	ALL	
Permit Renewal Quarter:	ALL	
Water System Is New:	ALL	
Water System Status:	ALL	
Water Status Date From:	ALL	**To** ALL
Water System Update Date	ALL	**To** ALL
Owner Number:	ALL	
SMA Number:	ALL	
SMA Name:	ALL	
Active Connection Count From:	ALL	**To:** ALL
Approved Connection Count	ALL	**To:** ALL
Full-Time Population From:	ALL	**To:** ALL
Water System Expanding	ALL	
Source Type:	ALL	
Source Use:	ALL	
WFI Printed For:	On-Demand	

Appendix L

Water Rights

THIS PAGE INTENTIONALLY BLANK.

Water Right Self-Assessment Form for Water System Plan

Mouse-over any link for more information. Click on any link for more detailed instructions.

Water Right Permit, Certificate, or Claim # *If water right is interruptible, identify limitation in yellow section below	WFI Source # If a source has multiple water rights, list each water right on separate line	Existing Water Rights Qi= Instantaneous Flow Rate Allowed (GPM or CFS) Qa= Annual Volume Allowed (Acre-Feet/Year) This includes wholesale water sold				Current Source Production – Most Recent Calendar Year Qi = Max Instantaneous Flow Rate Withdrawn (GPM or CFS) Qa = Annual Volume Withdrawn (Acre-Feet/Year) This includes wholesale water sold				10-Year Forecasted Source Production (determined from WSP) This includes wholesale water sold				20-Year Forecasted Source Production (determined from WSP) This includes wholesale water sold			
		Primary Qi Maximum Rate Allowed	Non-Additive Qi Maximum Rate Allowed	Primary Qa Maximum Volume Allowed	Non-Additive Qa Maximum Volume Allowed	Total Qi Maximum Instantaneous Flow Rate Withdrawn	Current Excess or (Deficiency) Qi	Total Qa Maximum Annual Volume Withdrawn	Current Excess or (Deficiency) Qa	Total Qi Maximum Instantaneous Flow Rate in 10 Years	10-Year Forecasted Excess or (Deficiency) Qi	Total Qa Maximum Annual Volume in 10 Years	10-Year Forecasted Excess or (Deficiency) Qa	Total Qi Maximum Instantaneous Flow Rate in 20 Years	20-Year Forecasted Excess or (Deficiency) Qi	Total Qa Maximum Annual Volume in 20 Years	20-Year Forecasted Excess or (Deficiency) Qa
1 G1-23817C	S02 – Well 1 & S03 – Well 2	300 GPM	-	384 AFY	-	0 GPM	(300 GPM)	0 AFY	(384 AFY)	0 GPM	(300 GPM)	0 AFY	(384 AFY)	0 GPM	(300 GPM)	0 AFY	0 AFY
2 G1-24299C	S06 – Well 5a	275 GPM	-	308 AFY	-	140 GPM	(135 GPM)	25 AFY	(283 AFY)	140 GPM	(135 GPM)	25 AFY	(283 AFY)	140 GPM	(135 GPM)	25 AFY	283 AFY
3 G1-24301C	S05 – Well 4	300 GPM	-	336 AFY	-	0 GPM	(300 GPM)	0 AFY	(336 AFY)	0 GPM	(300 GPM)	0 AFY	(336 AFY)	0 GPM	(300 GPM)	0 AFY	0 AFY
4 G1-24302C	S04 – Well 3	400 GPM	-	448 AFY	-	335 GPM	(65 GPM)	77 AFY	(371 AFY)	335 GPM	(65 GPM)	77 AFY	(371 AFY)	335 GPM	(65 GPM)	77 AFY	371 AFY
5 G1-24568C	S07 – Well 6	650 GPM	-	728 AFY	-	650 GPM	0 GPM	225 AFY	(503 AFY)	650 GPM	0 GPM	230 AFY	(498 AFY)	650 GPM	0 GPM	230 AFY	498 AFY
6 G1-25374P	S08 – Well 9	-	800	-	960	800 GPM	0 GPM	290 AFY	(0 AFY)	800 GPM	0 GPM	534 AFY	(0 AFY)	800 GPM	0 GPM	720 AFY	0 AFY
	TOTALS =	1925 GPM		2204 AFY		1925 GPM	0 GPM	617 AFY	(1587 AFY)	1925 GPM	0 GPM	866 AFY	(1338 AFY)	1925 GPM	0 GPM	1052 AFY	1152 AFY
Column Identifiers for Calculations:		A		B		C	=A-C	D	=B-D	E	= A-E	F	=B-F	G	=A-G	H	=B-H

PENDING WATER RIGHT APPLICATIONS: Identify any water right applications that have been submitted to Ecology.

Application Number	New or Change Application?	Date Submitted	Quantities Requested			
			Primary Qi	Non-Additive Qi	Primary Qa	Non-Additive Qa

INTERTIES: Systems receiving wholesale water complete this section. Wholesaling systems must include water sold through intertie in the current and forecasted source production columns above.

Name of Wholesaling System Providing Water	Quantities Allowed In Contract		Expiration Date of Contract	Currently Purchased Current quantity purchased through intertie				10-Year Forecasted Purchase Forecasted quantity purchased through intertie				20-Year Forecasted Purchase Forecasted quantity purchased through intertie			
	Maximum Qi Instantaneous Flow Rate	Maximum Qa Annual Volume		Maximum Qi Instantaneous Flow Rate	Current Excess or (Deficiency) Qi	Maximum Qa Annual Volume	Current Excess or (Deficiency) Qa	Maximum Qi 10-Year Forecast	Future Excess or (Deficiency) Qi	Maximum Qa 10-Year Forecast	Future Excess or (Deficiency) Qa	Maximum Qi 20-Year Forecast	Future Excess or (Deficiency) Qi	Maximum Qa 20-Year Forecast	Future Excess or (Deficiency) Qa
1Covington Water District	833 GPM	1,195 AFY	**12/31/2057**	833 GPM	0 GPM	967 AFY	(228 AFY)	833 GPM	0 GPM	934 AFY	(261 AFY)	833 GPM	0 GPM	934 AFY	(261 AFY)
2															
3															
TOTALS =	833 GPM	1,195 AFY		833 GPM	0 GPM	967 AFY	(228 AFY)	833 GPM	0 GPM	934 AFY	(261 AFY)	833 GPM	0 GPM	934 AFY	(261 AFY)
Column Identifiers for Calculations:	A	B		C	=A-C	D	=B-D	E	=A-E	F	=B-F	G	=A-G	H	=B-H

INTERRUPTIBLE WATER RIGHTS: Identify limitations on any water rights listed above that are interruptible.

Water Right #	Conditions of Interruption	Time Period of Interruption
1		
2		
3		

ADDITIONAL COMMENTS:

Water Source Supply Forecast Model

Year	Well #3	Well#5	Well#6	Well#9	Covington Intertie	Auburn Intertie	Actual Yearly Gallons	Actual QA Acre Feet	Comp Plan Acre Feet	Comp Plan Yearly Gallons
2019	24,398,529	7,027,405	72,492,188	72,981,445	315,958,000	0	492,857,567	1,513	1,826	492,857,567
2020	25,116,577	8,029,449	73,192,383	94,342,773	315,155,000	0	515,836,182	1,583	1,826	515,836,182
2021	25,200,000	8,200,000	75,000,000	120,000,000	315,155,000	0	543,555,000	1,668	1,837	598,600,000
2022	25,200,000	8,200,000	75,000,000	126,000,000	304,250,000	0	538,650,000	1,653	1,860	605,900,000
2023	25,200,000	8,200,000	75,000,000	132,000,000	304,250,000	0	544,650,000	1,671	1,871	609,550,000
2024	25,200,000	8,200,000	75,000,000	138,000,000	304,250,000	0	550,650,000	1,690	1,882	613,200,000
2025	25,200,000	8,200,000	75,000,000	144,000,000	304,250,000	0	556,650,000	1,708	1,904	620,500,000
2026	25,200,000	8,200,000	75,000,000	150,000,000	304,250,000	0	562,650,000	1,727	1,904	620,500,000
2027	25,200,000	8,200,000	75,000,000	156,000,000	304,250,000	0	568,650,000	1,745	1,916	624,150,000
2028	25,200,000	8,200,000	75,000,000	162,000,000	304,250,000	0	574,650,000	1,764	1,927	627,800,000
2029	25,200,000	8,200,000	75,000,000	168,000,000	304,250,000	0	580,650,000	1,782	1,938	631,450,000
2030	25,200,000	8,200,000	75,000,000	174,000,000	304,250,000	0	586,650,000	1,800	1,949	635,100,000
2031	25,200,000	8,200,000	75,000,000	180,000,000	304,250,000	0	592,650,000	1,819	1,957	637,655,000
2032	25,200,000	8,200,000	75,000,000	186,000,000	304,250,000	0	598,650,000	1,837	1,965	640,210,000
2033	25,200,000	8,200,000	75,000,000	192,000,000	304,250,000	0	604,650,000	1,856	1,973	642,765,000
2034	25,200,000	8,200,000	75,000,000	198,000,000	304,250,000	0	610,650,000	1,874	1,981	645,320,000
2035	25,200,000	8,200,000	75,000,000	204,000,000	304,250,000	0	616,650,000	1,892	1,988	647,875,000
2036	25,200,000	8,200,000	75,000,000	210,000,000	304,250,000	0	622,650,000	1,911	1,996	650,430,000
2027	25,200,000	8,200,000	75,000,000	216,000,000	304,250,000	0	628,650,000	1,929	2,004	652,985,000
2038	25,200,000	8,200,000	75,000,000	222,000,000	304,250,000	0	634,650,000	1,948	2,012	655,540,000
2039	25,200,000	8,200,000	75,000,000	228,000,000	304,250,000	0	640,650,000	1,966	2,020	658,095,000
2040	25,200,000	8,200,000	75,000,000	234,610,000	304,250,000	0	647,260,000	1,986	2,028	660,650,000

2/1/2022

Water Source Supply Forecast Model

Year	Well #3 QA Acre Feet	Well#5 QA Acre Feety	Well#6 QA Acre Feet	Well#9 QA Acre Feet	Covington Intertie QA Acre Feet	Auburn Intertie QA Acre Feet	Comp Plan Acre Feet	Actual QA Acre Feet	Comp Plan Yearly Gallons	Actual Yearly Gallons
2019	75	22	222	224	970	0	1,826	1,513	492,857,567	492,857,567
2020	77	25	225	290	967	0	1,826	1,583	515,836,182	515,836,182
2021	77	25	230	368	967	0	1,837	1,668	598,600,000	543,555,000
2022	77	25	230	387	934	0	1,860	1,653	605,900,000	538,650,000
2023	77	25	230	405	934	0	1,871	1,671	609,550,000	544,650,000
2024	77	25	230	424	934	0	1,882	1,690	613,200,000	550,650,000
2025	77	25	230	442	934	0	1,904	1,708	620,500,000	556,650,000
2026	77	25	230	460	934	0	1,904	1,727	620,500,000	562,650,000
2027	77	25	230	479	934	0	1,916	1,745	624,150,000	568,650,000
2028	77	25	230	497	934	0	1,927	1,764	627,800,000	574,650,000
2029	77	25	230	516	934	0	1,938	1,782	631,450,000	580,650,000
2030	77	25	230	534	934	0	1,949	1,800	635,100,000	586,650,000
2031	77	25	230	552	934	0	1,957	1,819	637,655,000	592,650,000
2032	77	25	230	571	934	0	1,965	1,837	640,210,000	598,650,000
2033	77	25	230	589	934	0	1,973	1,856	642,765,000	604,650,000
2034	77	25	230	608	934	0	1,981	1,874	645,320,000	610,650,000
2035	77	25	230	626	934	0	1,988	1,892	647,875,000	616,650,000
2036	77	25	230	644	934	0	1,996	1,911	650,430,000	622,650,000
2027	77	25	230	663	934	0	2,004	1,929	652,985,000	628,650,000
2038	77	25	230	681	934	0	2,012	1,948	655,540,000	634,650,000
2039	77	25	230	700	934	0	2,020	1,966	658,095,000	640,650,000
2040	77	25	230	720	934	0	2,028	1,986	660,650,000	647,260,000

2/1/2022

2019 - 2020 Water Source Supply

Year	Well #3	Well #3	Well #3 Yearly Total	Well#5	Well#5	Well#5 Yearly Total	Yearly Gallon Total	Yearly QA - Acre Feet	Well#5	Well#5 Yearly Total
2019			24,398,529			7,027,405	31,425,934	96		7,027,405
2020			25,116,577			8,029,449	33,146,026	102		8,029,449

Year	Well#6	Well#6	Well#6 Yearly Total	Well#9	Well#9	Well#9 Yearly Total	Yearly Gallon Total	Yearly QA - Acre Feet	Well#9	Well#9 Yearly Total
2019			72,492,188			72,981,445	145,473,633	446		72,981,445
2020			73,192,383			94,342,773	167,535,156	514		94,342,773

Year	Covington Intertie	Covington Intertie	Covington Intertie Yearly Total	Auburn Intertie	Auburn Intertie	Auburn Intertie Yearly Total	Yearly Gallon Total	Yearly QA - Acre Feet	Auburn Intertie	Auburn Intertie Yearly Total
2019			315,958,000			0	315,958,000	970		0
2020			315,155,000			0	315,155,000	967		0
							492,857,567	1,513		
							515,836,182	1,583		
										2/1/2022

STATE OF WASHINGTON
DEPARTMENT OF ECOLOGY

CERTIFICATE OF WATER RIGHT

☐ Surface Water (Issued in accordance with the provisions of Chapter 117, Laws of Washington for 1917, and amendments thereto, and the rules and regulations of the Department of Ecology.)

☒ Ground Water (Issued in accordance with the provisions of Chapter 263, Laws of Washington for 1945, and amendments thereto, and the rules and regulations of the Department of Ecology.)

PRIORITY DATE	APPLICATION NUMBER	PERMIT NUMBER	CERTIFICATE NUMBER
April 1, 1981	G1-23817	G1-23817P	G1-23817C

NAME
KING COUNTY WATER DISTRICT #111

ADDRESS (STREET)	(CITY)	(STATE)	(ZIP CODE)
27239 - 132nd Ave. S. E.	Kent	Washington	98031

This is to certify that the herein named applicant has made proof to the satisfaction of the Department of Ecology of a right to the use of the public waters of the State of Washington as herein defined, and under and specifically subject to the provisions contained in the Permit issued by the Department of Ecology, and that said right to the use of said waters has been perfected in accordance with the laws of the State of Washington, and is hereby confirmed by the Department of Ecology and entered of record as shown.

PUBLIC WATER TO BE APPROPRIATED

SOURCE
3 wells

TRIBUTARY OF (IF SURFACE WATERS)

MAXIMUM CUBIC FEET PER SECOND	MAXIMUM GALLONS PER MINUTE	MAXIMUM ACRE-FEET PER YEAR
	300	384

QUANTITY, TYPE OF USE, PERIOD OF USE
Municipal supply - continuously

LOCATION OF DIVERSION/WITHDRAWAL

APPROXIMATE LOCATION OF DIVERSION—WITHDRAWAL
#1 is approximately 300 feet north and 300 feet west of SE corner of Sec. 22

LOCATED WITHIN (SMALLEST LEGAL SUBDIVISION)	SECTION	TOWNSHIP N.	RANGE, (E. OR W.) W.M.	W.R.I.A.	COUNTY
SE¼SE¼	22	22	5 E	9	King

RECORDED PLATTED PROPERTY

LOT	BLOCK	OF (GIVE NAME OF PLAT OR ADDITION)

LEGAL DESCRIPTION OF PROPERTY ON WHICH WATER IS TO BE USED

Area served by King County Water District #111.

Installation and maintenance of an access port as described in Ground Water Bulletin No. 1 is required. An air line and gauge may be installed in addition to the access port.

An approved measuring device shall be installed and maintained in accordance with RCW 90.03.360, WAC 508-64-020 through WAC 508-64-040.

The right to the use of the water aforesaid hereby confirmed is restricted to the lands or place of use herein described, except as provided in RCW 90.03.380, 90.03.390, and 90.44.020.

This certificate of water right is specifically subject to relinquishment for nonuse of water as provided in RCW 90.14.180.

Given under my hand and the seal of this office at Redmond *Washington, this* 15th *day of* April, *19* 85

ENGINEERING DATA

OK

Department of Ecology

by Jean E. Thomas

STATE OF WASHINGTON
DEPARTMENT OF ECOLOGY

CERTIFICATE OF WATER RIGHT

☐ Surface Water (Issued in accordance with the provisions of Chapter 117, Laws of Washington for 1917, and amendments thereto, and the rules and regulations of the Department of Ecology.)

☒ Ground Water (Issued in accordance with the provisions of Chapter 263, Laws of Washington for 1945, and amendments thereto, and the rules and regulations of the Department of Ecology.)

PRIORITY DATE	APPLICATION NUMBER	PERMIT NUMBER	CERTIFICATE NUMBER
April 5, 1983	G1-24302	G1-24302P	G1-24302C

NAME
KING COUNTY WATER DISTRICT NO. 111

ADDRESS (STREET)	(CITY)	(STATE)	(ZIP CODE)
27239 - 132nd S. E.	Kent	Washington	98031

This is to certify that the herein named applicant has made proof to the satisfaction of the Department of Ecology of a right to the use of the public waters of the State of Washington as herein defined, and under and specifically subject to the provisions contained in the Permit issued by the Department of Ecology, and that said right to the use of said waters has been perfected in accordance with the laws of the State of Washington, and is hereby confirmed by the Department of Ecology and entered of record as shown.

PUBLIC WATER TO BE APPROPRIATED

SOURCE
Well #3

TRIBUTARY OF (IF SURFACE WATERS)

MAXIMUM CUBIC FEET PER SECOND	MAXIMUM GALLONS PER MINUTE	MAXIMUM ACRE-FEET PER YEAR
	400	448.0

QUANTITY, TYPE OF USE, PERIOD OF USE
Municipal Supply - continuously

LOCATION OF DIVERSION/WITHDRAWAL

APPROXIMATE LOCATION OF DIVERSION—WITHDRAWAL
2500 feet north and 100 feet east of southwest corner of Sec. 23

LOCATED WITHIN (SMALLEST LEGAL SUBDIVISION)	SECTION	TOWNSHIP N.	RANGE, (E. OR W.) W.M.	W.R.I.A.	COUNTY
NW¼SW¼	23	22	5 E	9	King

RECORDED PLATTED PROPERTY

LOT	BLOCK	OF (GIVE NAME OF PLAT OR ADDITION)

LEGAL DESCRIPTION OF PROPERTY ON WHICH WATER IS TO BE USED

Area served by King County Water District No. 111.

Installation and maintenance of an access port as described in Ground Water Bulletin No. 1 is required. An air line and gauge may be installed in addition to the access port.

An approved measuring device shall be installed and maintained in accordance with RCW 90.03.360, WAC 508-64-020 through WAC 508-64-040.

The right to the use of the water aforesaid hereby confirmed is restricted to the lands or place of use herein described, except as provided in RCW 90.03.380, 90.03.390, and 90.44.020.

This certificate of water right is specifically subject to relinquishment for nonuse of water as provided in RCW 90.14.180.

Given under my hand and the seal of this office at Redmond *Washington, this* 15th *day of* April *19* 85.

STATE OF WASHINGTON
DEPARTMENT OF ECOLOGY

CERTIFICATE OF WATER RIGHT

☐ Surface Water (Issued in accordance with the provisions of Chapter 117, Laws of Washington for 1917, and amendments thereto, and the rules and regulations of the Department of Ecology.)

☒ Ground Water (Issued in accordance with the provisions of Chapter 263, Laws of Washington for 1945, and amendments thereto, and the rules and regulations of the Department of Ecology.)

PRIORITY DATE	APPLICATION NUMBER	PERMIT NUMBER	CERTIFICATE NUMBER
April 5, 1983	G1-24301	G1-24301P	G1-24301C

NAME
KING COUNTY WATER DISTRICT NO. 111

ADDRESS (STREET)	(CITY)	(STATE)	(ZIP CODE)
27239 - 132nd S. E.	Kent	Washington	98031

This is to certify that the herein named applicant has made proof to the satisfaction of the Department of Ecology of a right to the use of the public waters of the State of Washington as herein defined, and under and specifically subject to the provisions contained in the Permit issued by the Department of Ecology, and that said right to the use of said waters has been perfected in accordance with the laws of the State of Washington, and is hereby confirmed by the Department of Ecology and entered of record as shown.

PUBLIC WATER TO BE APPROPRIATED

SOURCE
Well #4

TRIBUTARY OF (IF SURFACE WATERS)

MAXIMUM CUBIC FEET PER SECOND	MAXIMUM GALLONS PER MINUTE	MAXIMUM ACRE-FEET PER YEAR
	300	336.0

QUANTITY, TYPE OF USE, PERIOD OF USE
Municipal supply - continuously

LOCATION OF DIVERSION/WITHDRAWAL

APPROXIMATE LOCATION OF DIVERSION—WITHDRAWAL
2100 feet north and 800 feet west of southeast corner of Sec. 22.

LOCATED WITHIN (SMALLEST LEGAL SUBDIVISION)	SECTION	TOWNSHIP N.	RANGE, (E. OR W.) W.M.	W.R.I.A.	COUNTY
NE¼SE¼	22	22	5 E	9	King

RECORDED PLATTED PROPERTY

LOT	BLOCK	OF (GIVE NAME OF PLAT OR ADDITION)

LEGAL DESCRIPTION OF PROPERTY ON WHICH WATER IS TO BE USED

Area served by King County Water District No. 111.

PROVISIONS

Installation and maintenance of an access port as described in Ground Water Bulletin No. 1 is required. An air line and gauge may be installed in addition to the access port.

An approved measuring device shall be installed and maintained in accordance with RCW 90.03.360, WAC 508-64-020 through WAC 508-64-040.

The right to the use of the water aforesaid hereby confirmed is restricted to the lands or place of use herein described, except as provided in RCW 90.03.380, 90.03.390, and 90.44.020.

This certificate of water right is specifically subject to relinquishment for nonuse of water as provided in RCW 90.14.180.

Given under my hand and the seal of this office at Redmond *Washington, this* 15th *day of* April, *19* 85.

ENGINEERING DATA
OK

Department of Ecology

by Joan K. Thomas
JOAN K. THOMAS, Regional Manager

STATE OF WASHINGTON
DEPARTMENT OF ECOLOGY

CERTIFICATE OF WATER RIGHT

☐ Surface Water (Issued in accordance with the provisions of Chapter 117, Laws of Washington for 1917, and amendments thereto and the rules and regulations of the Department of Ecology.)

☒ Ground Water (Issued in accordance with the provisions of Chapter 263, Laws of Washington for 1945, and amendments thereto, and the rules and regulations of the Department of Ecology.)

PRIORITY DATE	APPLICATION NUMBER	PERMIT NUMBER	CERTIFICATE NUMBER
April 5, 1983	G1-24299	G1-24299P	G1-24299C

NAME
KING COUNTY WATER DISTRICT #111

ADDRESS (STREET)	(CITY)	(STATE)	(ZIP CODE)
27239 - 152nd S. E.	Kent	Washington	98[illegible]

This is to certify that the herein named applicant has made proof to the satisfaction of the Department of Ecology of a right to the use of the public waters of the State of Washington as herein defined, and under and specifically subject to the provisions contained in the Permit issued by the Department of Ecology, and that said right to the use of said waters has been perfected in accordance with the laws of the State of Washington, and is hereby confirmed by the Department of Ecology and entered of record as shown.

PUBLIC WATER TO BE APPROPRIATED

SOURCE
Well #5

TRIBUTARY OF (IF SURFACE WATERS)

MAXIMUM CUBIC FEET PER SECOND	MAXIMUM GALLONS PER MINUTE	MAXIMUM ACRE-FEET PER YEAR
	275	308.0

QUANTITY, TYPE OF USE, PERIOD OF USE
Municipal supply - continuously

LOCATION OF DIVERSION/WITHDRAWAL

APPROXIMATE LOCATION OF DIVERSION—WITHDRAWAL
1200 feet north and 1600 feet west of SE corner of Section 21

LOCATED WITHIN (SMALLEST LEGAL SUBDIVISION)	SECTION	TOWNSHIP N.	RANGE, (E. OR W.) W.M.	W.R.I.A.	COUNTY
SW¼SE¼	21	22	5 E	9	King

RECORDED PLATTED PROPERTY

LOT	BLOCK	OF (GIVE NAME OF PLAT OR ADDITION)

LEGAL DESCRIPTION OF PROPERTY ON WHICH WATER IS TO BE USED

Area served by King County Water District No. 111.

Installation and maintenance of an access port as described in Ground Water Bulletin No. 1 is required. An air line and gauge may be installed in addition to the access port.

An approved measuring device shall be installed and maintained in accordance with RCW 90.03.360, WAC 508-64-020 through WAC 508-64-040.

The right to the use of the water aforesaid hereby confirmed is restricted to the lands or place of use herein described, except as provided in RCW 90.03.380, 90.03.390, and 90.44.020.

This certificate of water right is specifically subject to relinquishment for nonuse of water as provided in RCW 90.14.180.

Given under my hand and the seal of this office at Redmond *Washington, this* 15th *day of* April *19* 85

Department of Ecology

ENGINEERING DATA

STATE OF WASHINGTON
DEPARTMENT OF ECOLOGY

CERTIFICATE OF WATER RIGHT

☐ Surface Water (Issued in accordance with the provisions of Chapter 117, Laws of Washington for 1917, and amendments thereto, and the rules and regulations of the Department of Ecology.)

☒ Ground Water (Issued in accordance with the provisions of Chapter 263, Laws of Washington for 1945, and amendments thereto, and the rules and regulations of the Department of Ecology.)

PRIORITY DATE	APPLICATION NUMBER	PERMIT NUMBER	CERTIFICATE NUMBER
October 19, 1984	G1-24568	G1-24568P	G1-24568C

NAME
King County Water District #111

ADDRESS (STREET)	(CITY)	(STATE)	(ZIP CODE)
27239 - 132nd S.E.	Kent	Washington	98042

This is to certify that the herein named applicant has made proof to the satisfaction of the Department of Ecology of a right to the use of the public waters of the State of Washington as herein defined, and under and specifically subject to the provisions contained in the Permit issued by the Department of Ecology, and that said right to the use of said waters has been perfected in accordance with the laws of the State of Washington, and is hereby confirmed by the Department of Ecology and entered of record as shown, but is limited to an amount actually beneficially used.

PUBLIC WATER TO BE APPROPRIATED

SOURCE
Well #6

TRIBUTARY OF (IF SURFACE WATERS)

MAXIMUM CUBIC FEET PER SECOND	MAXIMUM GALLONS PER MINUTE	MAXIMUM ACRE-FEET PER YEAR
---	650	728.*

QUANTITY, TYPE OF USE, PERIOD OF USE
Municipal supply - continuously

*Supplemental to primary rights.

LOCATION OF DIVERSION/WITHDRAWAL

APPROXIMATE LOCATION OF DIVERSION—WITHDRAWAL
150' north and 200' west of the east corner of Section 33.

LOCATED WITHIN (SMALLEST LEGAL SUBDIVISION)	SECTION	TOWNSHIP N.	RANGE, (E. OR W.) W.M.	W.R.I.A.	COUNTY
SE¼ NE¼	33	22	5E	9	King

RECORDED PLATTED PROPERTY

LOT	BLOCK	OF (GIVE NAME OF PLAT OR ADDITION)

LEGAL DESCRIPTION OF PROPERTY ON WHICH WATER IS TO BE USED

Area served by King County Water District No. 111.

PROVISIONS

Installation and maintenance of an access port as described in Ground Water Bulletin No. 1 is required. An air line and gauge may be installed in addition to the access port.

An approved measuring device shall be installed and maintained in accordance with RCW 90.03.360, WAC 508-64-020 through WAC 508-64-040 (Installation, operation and maintenance requirements attached hereto).

The right to the use of the water aforesaid hereby confirmed is restricted to the lands or place of use herein described, except as provided in RCW 90.03.380, 90.03.390, and 90.44.020.

This certificate of water right is specifically subject to relinquishment for nonuse of water as provided in RCW 90.14.180.

Given under my hand and the seal of this office at Redmond *Washington, this* 15th *day of* August *19* 89

Department of Ecology

ENGINEERING DATA
OK: (R)

by Herman H. Huggins
Herman H. Huggins, Section Supervisor Water Resources

FOR COUNTY USE ONLY

DEPARTMENT OF ECOLOGY

PERMIT

TO APPROPRIATE PUBLIC WATERS OF THE STATE OF WASHINGTON
Replaces PERMIT issued on 12/29/95

☐ Surface Water (Issued in accordance with the provisions of Chapter 117, Laws of Washington for 1917, and amendments thereto, and the rules and regulations of the Department of Ecology.)

☒ Ground Water (Issued in accordance with the provisions of Chapter 263, Laws of Washington for 1945, and amendments thereto, and the rules and regulations of the Department of Ecology.)

PRIORITY DATE	APPLICATION NUMBER	PERMIT NUMBER	CERTIFICATE NUMBER
January 3, 1989	G1-25374	G1-25374	

NAME
King County Water District No. 111

ADDRESS (STREET)	(CITY)	(STATE)	(ZIP CODE)
27224 144th SE	Kent	Washington	98042

The applicant is, pursuant to the Report of Examination which has been accepted by the applicant, hereby granted a permit to appropriate the following public waters of the State of Washington, subject to existing rights and to the limitations and provisions set out herein.

PUBLIC WATERS TO BE APPROPRIATED

SOURCE
Well #9

TRIBUTARY OF (IF SURFACE WATERS)

MAXIMUM CUBIC FEET PER SECOND	MAXIMUM GALLONS PER MINUTE	MAXIMUM ACRE FEET PER YEAR
	*800	*960

QUANTITY, TYPE OF USE, PERIOD OF USE
Municipal supply
*Total instantaneous quantity and annual consumption from all existing rights held by KCWD No. 111 shall not exceed 1925 gallons per minute and 2204 acre-feet per year.

LOCATION OF DIVERSION/WITHDRAWAL

APPROXIMATE LOCATION OF DIVERSION–WITHDRAWAL
400 feet south and 1160 feet east of the NW corner of Section 35.

LOCATED WITHIN (SMALLEST LEGAL SUBDIVISION)	SECTION	TOWNSHIP N.	RANGE, (E. OR W.) W.M.	W.R.I.A.	COUNTY
NW1/4 NW1/4	35	22	5E	9	King

RECORDED PLATTED PROPERTY

LOT	BLOCK	OF (GIVE NAME OF PLAT OR ADDITION)

LEGAL DESCRIPTION OF PROPERTY ON WHICH WATER IS TO BE USED

Area served by King County Water District No. 111 in accordance with its 1997 water system plan.

DESCRIPTION OF PROPOSED WORKS

Well – 12" x 443'
SWL (at time of well development) – 9.1 feet below ground

DEVELOPMENT SCHEDULE

BEGIN PROJECT BY THIS DATE:	COMPLETE PROJECT BY THIS DATE:	WATER PUT TO FULL USE BY THIS DATE:
Started	Complete	June 16, 2010

PROVISIONS

The total yearly withdrawal and use from well #9 shall not exceed 800 gpm and 960 af/yr for municipal supply; however instantaneous and annual quantities shall not be added on to the existing rights already held by the water district.

Operation of the district's ground water system (including Well #9) shall not exceed the combined instantaneous quantity of 1925 gpm and total combined annual consumption of 2204 af/yr.

An approved metering device shall be installed and maintained in accordance with RCW 90.03.360, WAC 508-64-020 through -040 (installation, operation, and maintenance requirements). Meter readings shall be recorded at least monthly.

In order to monitor the resource, static water level (SWL) shall be measured at least once each month. Measurements shall be taken after the pump has been shut off and the water level in the well has been stabilized. The data shall be maintained and made available to Ecology upon request. However, Ecology's Water Resources Section (NWRO) shall be notified if the SWL is determined to be below the level normally recorded at that time of year.

Upon completion of the Auburn intertie with KCWD facilities (projected during 1998), KCWD shall place their Wells 1, 2, and 4 in emergency back up status in perpetuity for use only when required to provide normal or peaking supply because of mechanical failure of KCWD or Auburn water production, transmission or distribution facilities. Until completion of the Auburn intertie, KCWD will use Wells 1, 2, and 4 only when necessary to provide peaking supply or in case of a mechanical failure as described in this paragraph.

KCWD 111 shall implement the monitoring program as proposed in Dr. Massman's September 9, 1996, plan for Well #9.

Contingent upon the results of the hydrogeologic monitoring conducted pursuant to Dr. Massman's plan, and the mutual agreement of all parties that such monitoring demonstrates that the impact of such withdrawal(s) upon the quantity and quality of streamflows in the Soos Creek system or the Green River is no greater than the impacts from the withdrawals from the water district's Wells 3, 5, 6, and 9, Ecology shall authorize well #7 (relating to application G1-25263; PCHB No. 96-79) and the Meridian Valley Country Club well (also known as district well #10, relating to application G1-26086; PCHB No. 96-78) as additional points of withdrawal for the district to be also operated within the quantities and conditions of existing rights.

The water district recognizes and has recognized its obligation to conserve water. To that end, the water district has adopted a rate structure which incorporates demand charges to provide its customers with an incentive to conserve water. The water district shall structure future water rates to include a demand charge to encourage customers to conserve water. Ecology and the Muckleshoot Tribe recognize that the water district's base rate is an important component of the revenue needed to operate and maintain the system; and that operation and maintenance requirements will be accounted for in future rate studies and future water rates.

This permit is subject to the implementation of the minimum requirements established in the Conservation Planning Requirements; Guidelines for Public Water Systems Regarding Water Use Reporting, Demand Forecasting Methodology and Conservation Programs, March 1994.

A certificate of water right will not be issued until a final investigation is made.

This permit shall be subject to cancellation should the permittee fail to comply with the above development schedule and/or to give notice to the Department of Ecology on forms provided by that Department documenting such compliance.

Given under my hand and the seal of this office at Bellevue, Washington,

this 16th day of June, 1998

DEPARTMENT OF ECOLOGY STATE OF WASHINGTON

ENGINEERING DATA
OK

Department of Ecology

by Daniel L. Swenson
Daniel L. Swenson, Section Supervisor

RECEIVED
MAR 6 1997
ATTORNEY GENERAL'S OFFICE
Ecology Div. - Legal

RECEIVED
FEB 28 1997
ENVIRONMENTAL
HEARINGS OFFICE

BEFORE THE POLLUTION CONTROL HEARINGS BOARD
STATE OF WASHINGTON

WATER DISTRICT NO. 111, a municipal corporation. Appellant, -vs- STATE OF WASHINGTON, DEPARTMENT OF ECOLOGY, Respondent.	PCHB NOS. 96-78, 96-79, and 96-80 **STIPULATION AND AGREED ORDER OF DISMISSAL**

Appellant Water District No. 111 (the "District"), through its attorney, Michael P. Ruark, respondent State of Washington, Department of Ecology ("Ecology"), through its attorney, Tom McDonald, Assistant Attorney General, and intervenor Muckleshoot Tribe, through its attorney, Robert L. Otsea, do hereby agree and stipulate as follows:

STIPULATION

On June 22, 1988, the District applied for a groundwater right for the use of 1,500 gallons per minute of water for municipal supply from District well 7, located in the SW ¼ SW¼ of S. 34, T. 22 N, R. 5 E, King County, Washington. The application was assigned No. G1-25263. On January 8, 1996, Ecology issued an order denying the application. The District timely filed an appeal to the Pollution Control Hearings Board ("PCHB") challenging Ecology's denial. The appeal was assigned No. 96-79.

ATTORNEY GENERAL OF WASHINGTON
Ecology Division
PO Box 40117
Olympia, WA 98504-0117
FAX (360) 438-7743

On January 3, 1989, the District applied for a groundwater right for the use of 1,000 gallons per minute of water for community domestic supply, from District well 9, located in the NW ¼ NW¼ of S. 35, T. 22 N, R. 5 E, King County, Washington. The application was assigned No. G1-25374. On January 8, 1996, Ecology issued an order denying the application. The District timely filed an appeal to the Pollution Control Hearings Board ("PCHB") challenging Ecology's denial. The appeal was assigned No. 96-80.

On March 4, 1991, the District applied for a groundwater right for the use of 750 gallons per minute of water for community domestic supply, from a District well known as the Meridian Valley Country Club Well, located in the NW ¼ NW ¼ of S. 22, T. 22 N, R. 5 E, King County, Washington. The application was assigned No. G1-26086. On January 8, 1996, Ecology issued an order denying the application. The District timely filed an appeal to the Pollution Control Hearings Board ("PCHB") challenging Ecology's denial. The appeal was assigned No. 96-78.

Intervenor Muckleshoot Tribe (the "Tribe") moved for and was granted authorization to intervene in these appeals as an interested party.

The District, Ecology, and the Tribe (the "Parties"), desire to avoid the expense and time commitment involved in a formal hearing of these appeals, and therefore agree to the following:

1. Upon completion of the Auburn intertie with District facilities (projected during 1998), the District shall place District wells 1, 2, and 4 in emergency back up status in perpetuity for use only when required to provide normal or peaking supply because of mechanical failure of District or Auburn water production, transmission or distribution facilities. Until completion of the Auburn intertie, the District will use wells 1, 2, and 4 only when necessary to provide peaking supply or in case of a mechanical failure as described in this paragraph.

ATTORNEY GENERAL OF WASHINGTON
Ecology Division
PO Box 40117
Olympia, WA 98504-0117
FAX (360) 438-7743

2. Upon payment of the statutory fee by the District, Ecology shall authorize well 9 (relating to application G1-25374, PCHB No. 96-80) as an additional point of withdrawal for the District's water rights, by issuing a superseding Report of Examination and a permit; provided that operation of the District's groundwater system does not exceed in total the limits in the District's current rights of an instantaneous withdrawal of 1,925 gallons per minute and an annual quantity of 2,204 acre feet per year. The superseding Report of Examination to be issued by Ecology shall list the District's current rights for instantaneous and annual withdrawals.

3. The District shall implement the monitoring program as proposed in Dr. Massmann's September 9, 1996 plan for District well 9. Dr. Massman's plan is attached and incorporated herein. The District further agrees that the Meridian Valley Country Club well (also known as District well 10) and District well 7 will only be permitted as provided in paragraph 4 below.

4. Contingent upon the results of the hydrogeologic monitoring conducted pursuant to Dr. Massman's plan, and the mutual agreement of all Parties that such monitoring demonstrates that the impact of such withdrawal(s) upon the quantity and quality of streamflows in the Soos Creek system or the Green River is no greater than the impacts from the withdrawals from the District's wells 3, 5, 6, and 9, Ecology shall authorize well 7 (relating to application G1-25263; PCHB No. 96-79) and the Meridian Valley Country Club well (also known as District well 10, relating to application G1-26086; PCHB No. 96-78) as additional points of withdrawal for the District to be also operated within the quantities and conditions of existing rights.

5. The District recognizes and has recognized its obligation to conserve water. To that end, the District has adopted a rate structure which incorporates demand charges to provide its customers with an incentive to conserve water. The District shall structure future water rates to include a demand charge to encourage customers to conserve water.

ATTORNEY GENERAL OF WASHINGTON
Ecology Division
PO Box 40117
Olympia, WA 98504-0117
FAX (360) 438-7743

Ecology and the Tribe recognize that the District's base rate is an important component of District revenue needed to operate and maintain the District's system and that operation and maintenance requirements will be accounted for in future rate studies and future water rates.

6. This stipulation will be entered as an order by the Board, and any violation of the stipulation will be a violation of the order. The Board, upon the request of a party, may enforce the terms of the stipulation.

7. Compliance with this stipulation resolves all disputes and issues arising in the appeals of Ecology's decisions related to applications No. G1-25263, No. G1-25374 and No. G1-26086; appeals No. 96-78, No. 96-79, and No. 96-80.

DATED this 27th day of ~~November~~ February, ~~1996~~ 1997.

CHRISTINE O. GREGOIRE
Attorney General

Alan M. Reuther (For)

TOM McDONALD, WSBA #17549
Assistant Attorney General
Attorneys for
State of Washington
Department of Ecology
(360) 459-6162

DATED this 5th day of ~~November~~ December, 1996.

INSLEE, BEST, DOEZIE & RYDER, P.S.

Michael P. Ruark

MICHAEL P. RUARK
WSBA #2220
Attorneys for Appellant
Water District No. 111

ATTORNEY GENERAL OF WASHINGTON
Ecology Division
PO Box 40117
Olympia, WA 98504-0117
FAX (360) 438-7743

DATED this ____ day of November, 1996.

OFFICE OF THE TRIBAL ATTORNEY

ROBERT L. OTSEA, JR.
WSBA #9367
KAREN D. ALLSTON
WSBA #25336
Attorneys for Intervenor
Muckleshoot Indian Tribe

ATTORNEY GENERAL OF WASHINGTON
Ecology Division
PO Box 40117
Olympia, WA 98504-0117
FAX (360) 438-7743

RECEIVED
MAR 6 1997
ATTORNEY GENERAL'S OFFICE
Ecology Div. - Lacey

ORDER

The Pollution Control Hearings Board, having reviewed the foregoing stipulation, hereby adopts the stipulation as an order, and upon issuance of the superseding Report of Examination and permit under paragraph 2 of the stipulation, the appeals of No. 96-78, No. 96-79, and No. 96-80 are dismissed with prejudice.

DONE IN OPEN COURT this 5th day of March 1997.

POLLUTION CONTROL HEARINGS BOARD

ROBERT V. JENSEN, Presiding

RICHARD C. KELLEY, Chair

JAMES A. TUPPER JR., Member

Presented by:

CHRISTINE O. GREGOIRE
Attorney General

Alan Reichman FOR

THOMAS McDONALD
WSBA #17549
Assistant Attorney General
Attorneys for Respondent
State of Washington
Department of Ecology

ATTORNEY GENERAL OF WASHINGTON
Ecology Division
PO Box 40117
Olympia, WA 98504-0117
FAX (360) 438-7743

Approved for entry; notice
of presentation waived:

INSLEE, BEST, DOEZIE & RYDER, P.S.

MICHAEL P. RUARK
WSBA #2220
Attorneys for Appellant
Water District No. 111

OFFICE OF THE TRIBAL ATTORNEY

ROBERT L. OTSEA, JR.
WSBA #9367
KAREN D. ALLSTON
WSBA #25336
Attorneys for Intervenor
Muckleshoot Indian Tribe

ATTORNEY GENERAL OF WASHINGTON
Ecology Division
PO Box 40117
Olympia, WA 98504-0117
FAX (360) 438-7743

Proposed Monitoring at WD 111 Well #9

1. Summary of Monitoring Activities

Monitoring activities are recommended to estimate hydrogeologic parameters in the vicinity of Well #9. We recommend that these activities focus on the local flow system and the effects of the wells within this local system. The overall objective of the monitoring activities is to evaluate the effect of Well #9 on water levels in more shallow aquifers and confining units. A pumping test is recommended to estimate site-specific values for leakage rates through confining layers. This information will be used to better manage water resources within the Soos Creek basin.

The pumping tests that are recommended would involve measuring drawdowns in observation wells within and above the Q(B)c aquifer as a function of time. At least one additional observation well cluster would likely be required in the immediate vicinity of Well #9. This well cluster would be completed in the Q(B)c aquifer, in the Q(B)f confining unit, and in the Q(A)c aquifer. Multiple-completion monitoring wells could be used. The well system would need to be shut down for a period of several weeks to a month prior to the pumping tests. The duration of the pumping tests would be on the order of several weeks.

The data that are collected during the pumping tests would be used to estimate hydraulic conductivities for the confining units above the pumped aquifer and to evaluate the degree of hydraulic communication between aquifers. This information would then be used to refine estimates for the response times for the aquifer system. Better estimates of response times and leakage rates would ultimately allow operating conditions to be identified that would reduce adverse impacts on surface water flows.

2. Details of Monitoring Activities

Well #9

1. One set of clustered or nested piezometers at Well #9, preferably within 200 feet of the Well #9. This cluster will have at least three piezometers, as noted above. The actual depth of each piezometer will be determined the time of drilling and will be agreed upon by Muckleshoot and WD 111.

2. A 3 day controlled, constant rate pumping test will be conducted according to procedures specified in "Aquifer Test Procedures," WDOE, 1976.

3. Based on the results of the 3-day test, a second set of piezometers may be installed if either Muckleshoot or WD 111 deems necessary to contribute to the overall objectives of the monitoring program.

4. Water levels will be monitored in each piezometer on a week basis for at least one year.

b. Wells #7 and #10

Same as above, with depths adjusted based on extraction well depth and completion zone.

SUPERSEDING REPORT OF EXAMINATION

TO APPROPRIATE PUBLIC WATERS OF THE STATE OF WASHINGTON
Replaces Report of Examination issued on 12/29/95

☐ Surface Water (Issued in accordance with the provisions of Chapter 117, Laws of Washington for 1917, and amendments thereto, and the rules and regulations of the Department of Ecology.)

☒ Ground Water (Issued in accordance with the provisions of Chapter 263, Laws of Washington for 1945, and amendments thereto, and the rules and regulations of the Department of Ecology.)

PRIORITY DATE	APPLICATION NUMBER	PERMIT NUMBER	CERTIFICATE NUMBER
January 3, 1989	G1-25374		

NAME
King County Water District No. 111

ADDRESS (STREET)	(CITY)	(STATE)	(ZIP CODE)
27224 144th SE	Kent	Washington	98042

PUBLIC WATERS TO BE APPROPRIATED

SOURCE
Well #9

TRIBUTARY OF (IF SURFACE WATER)

MAXIMUM CUBIC FEET PER SECOND	MAXIMUM GALLONS PER MINUTE	MAXIMUM ACRE FEET PER YEAR
	*800	*960

QUANTITY, TYPE OF USE, PERIOD OF USE
Municipal supply
*Total instantaneous quantity and annual consumption from all existing rights held by KCWD No. 111 shall not exceed 1925 gallons per minute and 2204 acre-feet per year.

LOCATION OF DIVERSION/WITHDRAWAL

APPROXIMATE LOCATION OF DIVERSION-WITHDRAWAL
400 feet south and 1160 feet east of the NW corner of Section 35.

LOCATED WITHIN (SMALLEST LEGAL SUBDIVISION)	SECTION	TOWNSHIP N	RANGE (E OR W) W.M.	W.R.I.A.	COUNTY
NW1/4 NW1/4	35	22	5E	9	King

RECORDED PLATTED PROPERTY

LOT	BLOCK	OF (GIVE NAME OF PLAT OR ADDITION)

LEGAL DESCRIPTION OF PROPERTY ON WHICH WATER IS TO BE USED

Area served by King County Water District No. 111 in accordance with its 1997 water system plan.

DESCRIPTION OF PROPOSED WORKS

Well – 12" x 443'
SWL (at time of well development) – 9.1 feet below ground

DEVELOPMENT SCHEDULE

BEGIN PROJECT BY THIS DATE:	COMPLETE PROJECT BY THIS DATE:	WATER PUT TO FULL USE BY THIS DATE:
Started	Complete	2010

REPORT

BACKGROUND:

Application:	G1-25374
Name:	King County Water District No. 111 (KCWD 111)
Request:	1000 gallons per minute from a well (#9) on 1/3/89
Location:	NW¼ NW¼ Section 35, T. 22 N., R. 5 E., W.M. in King County
Purpose:	Municipal supply
Notice:	Valley Daily News on March 1 and 8, 1989
Protests:	None

Ecology evaluated the request and issued a denial on 12/29/1995 based on water not available without causing impairment to existing rights. KCWD 111 timely filed an appeal to the Pollution Control Hearings Board and the case was assigned number 96-80. The Muckleshoot Indian Tribe moved for and was granted authorization to intervene the appeal as an interested party. In March 1997, KCWD 111, Ecology, and the Muckleshoot Indian Tribe reached an agreement, which resolved the issues and disputes arising in the appeal of Ecology's denial of the application. A stipulation and agreed order was signed by the Pollution Control Hearings Board on March 5, 1997, with one of the conditions of the order that Ecology issue a Superseding Report of Examination.

INVESTIGATION:

In addition to all the information used as a basis for evaluating the application request in December 1995, information from the applicant's latest update (1997) to their water system plan was used in preparation of this superseding report.

FINDINGS:

The well covered by this application was drilled and tested in 1989. The firm of Robinson and Noble, Ground Water and Environmental Geologists, conducted the testing of well #9 and prepared a report recommending use at 800 gallons per minute (gpm). The well has been designed and developed to be capable of supplying 800 gpm. The instantaneous quantity to be approved for a permit should be reduced from the applied quantity of 1000 gpm to 800 gpm. The applicant agrees to the reduced quantity.

KCWD 111 holds the following certificated ground water rights totaling 1925 gpm and 2204 acre feet per year (af/yr).

G1-23817C	Wells 1,2,& 3	4/1/81	300 / 384
G1-24299C	Well 5a	4/5/83	275 / 308
G1-24301C	Well 4	4/5/83	300 / 336
G1-24302C	Well 3	4/5/83	400 / 448
G1-24568C	Well 6	10/19/84	650 / 728

In addition to this application for well #9, KCWD 111 filed two additional applications, G1-25263 for well #7, and G1-26086 for well #10. These applications were denied permit approval in 1995 along with the application for well #9. However, as part of the stipulation and agreed order, depending on results of monitoring of the ground water system, it may be possible to allow permits to be issued for wells 7 and 10 for additional points of withdrawal only.

Per the stipulation and agreed order, KCWD 111 will only be able to utilize well #9 as an additional point of withdrawal (to protect existing rights from any additional impairment). Both instantaneous and annual quantities allocated to be pumped from well #9 would not be added to the existing rights held by the district. The total quantities held by the district would remain at 1925 gpm and 2204 af/yr.

Based on design capacity and operation at a maximum of 75% continuous pumping, well #9 would be authorized to pump a maximum of 800 gpm and up to 960 af/yr.

CONCLUSION:

In accordance with Section 90.03 and 90.44 RCW and the stipulation and agreed order, water is available as recommended for this beneficial appropriation from the source in question and that the appropriation as recommended will not impair existing rights or be detrimental to the public welfare. Therefore, a permit should issue subject to existing rights and indicated provisions.

RECOMMENDATION:

A water right permit should issue for a reduced quantity of 800 gpm, 960 af/yr from Well #9 subject to existing rights and conditions of the stipulation and agreed order as well as other pertinent conditions.

> The total yearly withdrawal and use from well #9 shall not exceed 800 gpm and 960 af/yr for municipal supply; however instantaneous and annual quantities shall not be added on to the existing rights already held by the water district.

SUPERSEDING MEMORANDUM OF RECOMMENDATION

Operation of the district's ground water system (including Well #9) shall not exceed the combined instantaneous quantity of 1925 gpm and total combined annual consumption of 2204 af/y.

An approved measuring device shall be installed and maintained in accordance with RCW 90.03.360, WAC 508-64-020 through 508-64-040 (Installation, operation and maintenance requirements enclosed). Meter readings shall be recorded monthly and this data shall be maintained and be made available to the Department of Ecology upon request.

In order to monitor the resource, static water level (SWL) shall be measured at least once each month. Measurements shall be taken after the pump has been shut off and the water level in the well has been stabilized. The data shall be maintained and made available to Ecology upon request. However, Ecology's Water Resources Section (NWRO) shall be notified if the SWL is determined to be below the level normally recorded at that time of year. See enclosed form.

Upon completion of the Auburn intertie with KCWD facilities (projected during 1998), KCWD shall place their Wells 1, 2, and 4 in emergency back up status in perpetuity for use only when required to provide normal or peaking supply because of mechanical failure of KCWD or Auburn water production, transmission or distribution facilities. Until completion of the Auburn intertie, KCWD will use Wells 1,2, and 4 only when necessary to provide peaking supply or in case of a mechanical failure as described in this paragraph.

KCWD 111 shall implement the monitoring program as proposed in Dr. Massman's September 9, 1996, plan for Well #9. (Plan attached and incorporated herein).

Contingent upon the results of the hydrogeologic monitoring conducted pursuant to Dr. Massman's plan, and the mutual agreement of all parties that such monitoring demonstrates that the impact of such withdrawal(s) upon the quantity and quality of streamflows in the Soos Creek system or the Green River is no greater than the impacts from the withdrawals from the water district's Wells 3, 5, 6, and 9, Ecology shall authorize well #7 (relating to application G1-25263; PCHB No. 96-79) and the Meridian Valley Country Club well (also known as district well #10, relating to application G1-26086; PCHB No. 96-78) as additional points of withdrawal for the district to be also operated within the quantities and conditions of existing rights.

Additionally, the Stipulation and Agreed Order of Dismissal, dated March 5, 1997, is attached hereto and is incorporated by reference as part of this Superseding Report of Examination. Accordingly, the recommended approval of Ground Water Application G1-25374 to permit is subject to all terms and conditions specified in the Stipulation and Agreed Order of Dismissal.

The water district recognizes and has recognized its obligation to conserve water. To that end, the water district has adopted a rate structure which incorporates demand charges to provide its customers with an incentive to conserve water. The water district shall structure future water rates to include a demand charge to encourage customers to conserve water. Ecology and the Muckleshoot Tribe recognize that the water district's base rate is an important component of the revenue needed to operate and maintain the system; and that operation and maintenance requirements will be accounted for in future rate studies and future water rates.

This permit is subject to the implementation of the minimum requirements established in the Conservation Planning Requirements: Guidelines for Public Water Systems Regarding Water Use Reporting, Demand Forecasting Methodology and Conservation Programs, March 1994, which are enclosed.

A certificate of water right will not be issued until a final investigation is made.

REPORT BY: Janet Jang DATE: April 23, 1999

Appendix M

Combined Hazard Inventory

THIS PAGE INTENTIONALLY BLANK.

ROBINSON NOBLE SALTBUSH INC. Established 1947
GROUNDWATER & ENVIRONMENTAL SCIENTISTS

KING COUNTY WATER DISTRICT 111
HAZARD INVENTORY UPDATE

MAY 2005

By

James E. Hay, L.HG.
Senior Hydrogeologist

State of Washington
Hydrogeologist
365
Licensed Geologist
JAMES E. HAY

3011 South Huson Street, Suite A Tacoma, Washington 98409 ▪ (253) 475-7711 ▪ Fax: (253) 472-5846
e-mail: mail@robinson-noble.com

KING COUNTY WATER DISTRICT 111
HAZARD INVENTORY UPDATE
MAY 2005
Table of Contents

Introduction **1**

Contaminant Source Inventory Methodology **1**

Contaminant Source Inventory Results **3**
Databases of Known or Suspected Contamination 4
Databases of Potential Contamination 8

Discussion **11**
Well Nos. 1, 2, 3 and 4 11
Wells 5/5A 12
Wells 6 and 7 12
Well 9 12
Land Use 12

TABLES

TABLE 1 Federal Environmental Databases searched by EDR
TABLE 2 State and Other Environmental Databases searched by EDR
TABLE 3 Confirmed and Suspected Contaminated Sites
TABLE 4 Leaking Underground Storage Tanks (LUST) List
TABLE 5 Washington Independent Cleanup Report and Voluntary Cleanup Program Lists
TABLE 6 SPILLS Database
TABLE 7 Underground Storage Tanks (UST) List
TABLE 8 RCRA Small Quantity Generators
TABLE 9 Sites of Potential Contamination Not Listed in Reviewed Databases

APPENDIX

EDR Report (Report located on attached CD)

Summary Hazard Table B1

Introduction

Roth Hill is in the process of preparing a new Comprehensive Plan for King County Water District 111 (District) and, as a component of the Comprehensive Plan, Roth Hill is updating the District's Source Water Assessment Plan (SWAP). Robinson, Noble & Saltbush was contracted to assist with this aspect of the project.

A source water assessment plan typically consists of: the identification of Source Water Protection Areas (SWPAs), specifically Wellhead Protection Areas (WHPAs) in the case of groundwater supplies; an inventory within each WHPA for potential contaminant sources; a susceptibility assessment conducted for each drinking water source; and the public distribution of findings. As no substantial changes to the production from District wells are proposed, a revision of the wellhead protection areas (WHPAs) was not warranted. Susceptibility assessments for each source have previously been accomplished and other entities will address the public distribution and discussion issues as necessary. With these aspects already addressed, Robinson, Noble & Saltbush was tasked with preparing an updated inventory of potential contaminant sources. As a precautionary step, Robinson, Noble & Saltbush personnel contacted representatives of the Washington State Department of Health Office of Drinking Water (Health) and confirmed that Health did not have any additional expectations for the update of the District's SWAP.

Contaminant Source Inventory Methodology

The primary task to be accomplished was a review of federal, state, and local databases for potential point sources of contamination within the roughly 18-square-mile area encompassing the District's WHPAs. A summary of the potential sources of groundwater contamination, presented as Table 5.1 in the original *King County Water District 111 Wellhead Protection Plan* (1997[1]; WHPP), provided guidance for this update. A review of land use and zoning changes in the District, accomplished by Roth Hill, revealed only minor changes since the 1997 effort.

Environmental Data Resources, Inc. (EDR), a database research company, was subcontracted to review the available federal, state, and other environmental databases (see Tables 1 and 2) for any known or potential contaminant sites within this area. To ensure coverage of the irregular area covered by the WHPAs, a four-mile-radius area centered just east of Lake Meridian was specified for this review. Due to its bulk, the EDR Radius Atlas report is presented on a CD-ROM in the Appendix. The results for this large area (roughly 50 square miles) were reviewed to determine which sites were located within the 1997 WHPP study area.

---

[1] Robinson & Noble, Inc. and Hedges & Roth Engineering, Inc., 1997, *King County Water District 111 Wellhead Protection Plan*: prepared for King County Water District 111, 71 p, 27 figs., 1 app.

Table 1: Federal Environmental Databases searched by EDR

Database Acronym	Database Name/Description	Database Source	No. of Sites Identified in Study Area
CERCLIS	Comprehensive Environmental Response, Compensation, and Liability Information	U. S. Environmental Protection Agency (EPA)	1
CERC-NFRAP	CERCLIS No Further Remedial Action Planned	EPA	0
NPL	National Priority List	EPA	0
De-listed NPL	NPL Deletions	EPA	0
NPL Lien	NPL (Federal Superfund) Liens	EPA	0
--	US Brownfields	EPA	1
CORRACTS	Corrective Action Report	EPA	0
RCRIS-TSD	Resource Conservation and Recovery Information System - Treatment, Storage, or Disposal Sites	EPA	0
RCRIS-LQG	RCRIS-Large Quantity Generators	EPA	0
RCRIS-SQG	RCRIS-Small Quantity Generators	EPA	23
RAATS	RCRA Administrative Action Tracking System	EPA	0
SSTS	Section Seven Tracking System (pesticide producing establishments)	EPA	0
HMIRS	Hazardous Material Information Reporting System	EPA	1
PADS	PCB Activity Database System	EPA	0
ERNS	Emergency Response Notification System	EPA	2
TRIS	Toxic Chemical Release Inventory System	EPA	0
TSCA	Toxic Substance Control Act	EPA	0
MLTS	Material Licensing Tracking System	EPA	0
MINES	Mines Master Index File	EPA	0
CONSENT	Superfund (CERCLIS) Consent Decrees	EPA	0
FTTS	FIFRA/ TSCA Tracking System (Federal Insecticide, Fungicide, & Rodenticide Act)/TSCA (Toxic Substances Control Act)	EPA	1
INDIAN LUST	Leaking Underground Storage Tanks on Indian Lands	EPA	0
INDIAN UST	Underground Storage Tanks on Indian Lands	EPA	0
INDIAN RESERVE	Indian Reservations	U.S. Geological Survey	0
DOD	Department of Defense sites	U.S. Department of Defense (DOD)	0
FUDS	Formerly Used Defense Sites	DOD	0
UMTRA	Uranium Mill Tailings Remedial Action	U.S. Department of Energy	0

EDR assigns sites listed on these databases an identification number, starting at the center of the search radius and moving outwards, such that larger numbers generally reflect sites at greater distance from the center of the four-mile radius. Where several sites are close together, EDR assigns the cluster a letter in addition to the numeric designation. The sites identified by the EDR search and found to be within the study area were further reviewed for duplicate and errant record entries which often occur when a site is listed in multiple databases. EDR site listings reflected between one and five database entries and up to six listings were found to reflect a single property. Each of these sites was then assigned a single Site Number for reference in this report. Those sites for which the database search provided addresses and for which current parcel numbers could be determined through the King County GISCenter webpage

(http://www.metrokc.gov/gis/Mapportal/PViewer_main.htm) were considered adequately located for the purposes of this update. Those sites for which no address was provided in the databases or for which current parcel numbers could not be identified were targeted for a site visit.

Table 2: State and Other Environmental Databases searched by EDR

Database Acronym	Database Name/Description	Database Source	# of Sites Identified in Study Area
CSCSL	Confirmed and Suspected Contaminated Sites List	Washington State Department of Ecology (Ecology)	3
CSCSL NFA	Confirmed and Suspected Contaminated Sites List with No Further Action designations	Ecology	7
HSL	Hazardous Sites List	Ecology	1
SWF/LF	Solid Waste Facility Database	Ecology	0
LUST	Leaking Underground Storage Tank Database	Ecology	13
UST	Underground Storage Tank Database	Ecology	28
WA ICR	Washington Independent Cleanup Reports	Ecology	19
AST	Aboveground Storage Tanks	Ecology	0
DRYCLEANERS	Drycleaners registered as hazardous waste generators	Ecology	0
CDL	Clandestine Drug Labs (typically methamphetamine)	Ecology	1
EMI	Washington Emissions Data System	Ecology	0
VCP	Voluntary Cleanup Program	Ecology	7
SPILLS	Spills reported to the Spill Prevention, Preparedness and Response Division	Ecology	43
Coal Gas	Former Manufactured Gas (Coal Gas) Sites	EDR	0

On December 30, 2004, a windshield survey was performed with the assistance of District personnel to verify the physical locations of sites identified in the database review. Parcel numbers were ultimately identified for all but six sites. Two of these sites could not be physically located at the addresses provided in the databases and the facilities in question no longer appear to be present. The remaining four sites for which parcel numbers could not be determined were identified from a single database, SPILLS, referencing addresses that no longer exist or road intersections that do not correspond with a particular parcel.

Contaminant Source Inventory Results

The attached EDR report lists 271 entries in multiple environmental databases. After eliminating those sites outside of the 1997 study area, combining duplicate entries, and correcting address errors in the Ecology databases, a total of 39 sites of known current or historic contamination, as determined by database listings (CERCLIS, CSCSL, LUST, WA ICR/VCP, SPILLS), were identified within the study area. Another 22 sites of potential contamination concern were identified from database listings, typically from the RCRIS and UST databases. An additional ten sites of possible contamination potential (not listed in any of the reviewed databases) were identified during the field inventory. A summary table of these 71 sites, our site reference number, corresponding EDR reference numbers, site address, a list of the databases on which each site is listed, and the best-match King County parcel number is provided in the appendix as Table B1. These sites were map located (see updated Figure 5.2) according to these parcel

numbers and provided to Roth Hill for inclusion in the updated SWAP and Comprehensive Plan being prepared for the District.

The following paragraphs and Tables 3 – 6 summarize the sites of known current or historic contamination. Many of these sites have already initiated site remediation. Sites listed on specific databases are summarized below.

Databases of Known or Suspected Contamination

EPA Region 10, Comprehensive Environmental Response, Compensation, and Liability Information System (CERCLIS): This system tracks sites that have been reviewed by EPA under the Comprehensive Environmental Response, Compensation, and Liability Act (CERCLA). Only one site in the study area, the US DOE BPA Covington Substation (Site No. 31), is listed in this system. This site was initially assessed and inspected in 1995 and assigned a high priority status, perhaps related to the ongoing cleanup of a LUST on the property. The site was subsequently reassessed in 2000 and assigned a low priority status; the site is not listed on the National Priority List (Superfund).

EPA Region 10, US Brownfields: These are sites listed by EPA which meet the definition of a brownfield: real property, the expansion, redevelopment, or reuse of which may be complicated by the presence of a hazardous substance, pollutant, or contaminant. In Washington State, this program began as an outgrowth of the Model Toxics Control Act (MTCA), which included cleanup standards for industrial sites. Only one site on this list was identified, Covrox, Inc. (Site No. 8). This site was not mapped by EDR due to poor location information. Communications with Ecology personnel revealed that the records were confused due in part to the fact that this site was given a second name, the Kaufman Covington Property. Some site remediation of this property has occurred and the cleanup status is being reevaluated (see discussion below).

EPA Region 10, Emergency Response Notification System (ERNS): This system, maintained for the EPA by the National Response Center, is the sole federal point of contact for reporting releases of oil and hazardous substances. Two sites were identified on this list. Site No. 31, US DOE BPA Covington Substation, is in the ERNS system due to the release of 25 gallons of PCB-containing oil from a failed seal in a power transformer. The oil was collected with absorbent blankets and the affected soil was to be removed. At the location of Site No. 39, an unknown quantity of white, oil-based paint was reportedly dumped or spilled into a ditch feeding Lake Meridian.

Ecology, Confirmed and Suspected Contaminated Sites Report: As discussed in the 1997 Wellhead Protection Plan, sites on this list have been investigated under the Model Toxic Control Act (MTCA). Once a site is reported to Ecology, a site hazard assessment (SHA) is performed to determine basic information about the site. If warranted, the sites are then evaluated with the Washington Ranking Method (WARM) to estimate the potential threat the site poses, if not cleaned up, to human health and the environment. Ranks are relative and range from "1" for sites of highest concern to "5" for sites of lowest concern. Sites that have been so ranked are then placed on Ecology's Hazardous Sites List (HSL) and the ranking is used to assess cleanup priority.

Table 3 lists sites that are either on the Confirmed and Suspected Contaminated Sites list (CSCSL) or have received a "No Further Action" designation (CSCSL-NFA). A total of nine sites were identified in the District area. Site No. 8 (the current site of Bowen-Scarff Ford) warrants particular mention. According to Ecology, this location was initially the site of an auto recycler, Covrox, Inc., and subsequently the site of illegal construction/demolition activities and

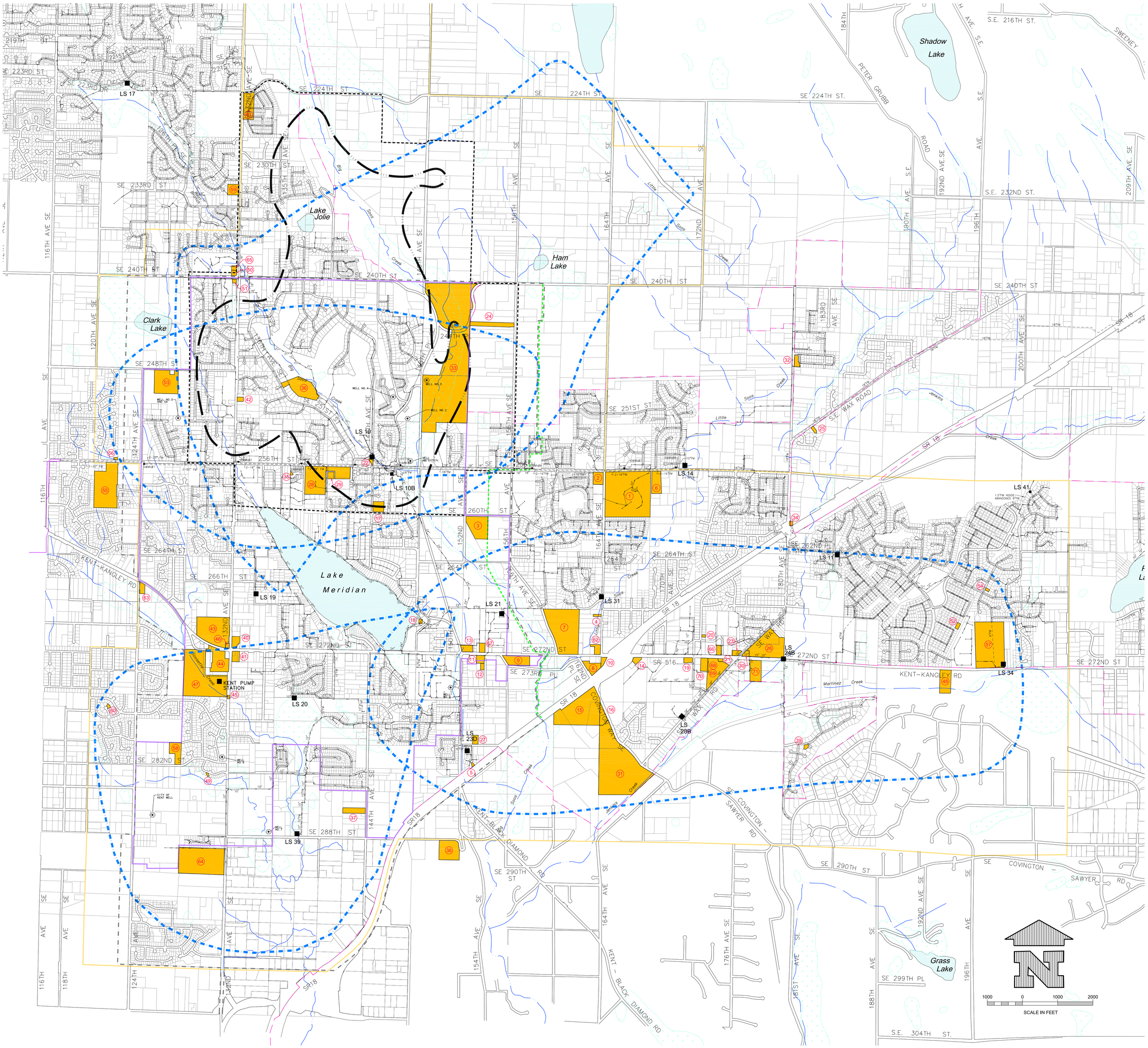

WATER DISTRICT #111 OF KING COUNTY

HAZARDOUS WASTE GENERATOR LOCATION MAP

FIGURE 5.2

DECEMBER 2005

LEGEND

- SERVICE AREA - ANNEXED
- PLANNING AREA -CWSP
- COVINGTON BOUNDARY AGREEMENT
- WHPA BOUNDARY
- STUDY AREA BOUNDARY
- URBAN GROWTH BOUNDARY
- EXISTING FORCE MAIN
- SEWAGE LIFT STATION
- DISTRICT SUPPLY WELLS
- WETLAND
- NORTH MERIDIAN AQUIFER
- RECOMMENDED WELLHEAD PROTECTION ZONES
- HAZARDOUS WASTE GENERATOR
- REFERENCE NUMBER

Roth Hill Engineering Partners, LLC
RothHill
2600 116th Avenue NE #100
Bellevue, Washington 98004
Tel 425.869.9448
Fax 425.869.1190

F:\003400180\PLAN\DWGS\HWG-MAP-FIG-5.2

household dumping. Following a SHA, the site received a WARM ranking of "2" indicating a moderately high contamination risk and the site has been on the HSL since August 2000. When the property owner subsequently entered the Voluntary Cleanup Program (VCP), the VCP Coordinator listed the site under the name "Kaufman Covington Property" and some level of remedial activity was performed. In February 2003, this site received a "No Further Action" (NFA) designation from Ecology; however, concerns have been raised regarding the procedural processing of this NFA designation and the site is currently being re-evaluated.

Table 3: Confirmed and Suspected Contaminated Sites

Site No.	Site Name(s)	Site Address	Status
Sites with uncertain remediation status			
8	Kaufman Covington Property/ Covrox, Inc.	27230 Covington Way SE	Media affected: soil (confirmed)/groundwater (suspected); **also on Ecology Hazardous Sites List as of August 2000**; NFA issued following IRAP/VCP (being re-evaluated)
Sites awaiting remedial action			
48	Northwest Pipeline Covington	19241 SE 272nd Ave	Media affected: soil (confirmed)/air (suspected); Awaiting Remedial Action
Sites undergoing remediation			
10	Circle K/76/BP/Kayo Oil	16405 SE 272nd St	Media affected: ground water and soil (confirmed); Independent Remedial Action in progress
Sites with some level of remediation completed			
11	Zerr Farm & Garden	15323 SE 272nd St	Media affected: soil (confirmed); NFA issued following IRAP/VCP
13	Lake Meridian Dry Cleaners	15220 SE 272nd St	Media affected: soil (confirmed); Final Independent Remedial Action Report filed
15	Lakeside Industries/Iddings Bark, Topsoil, Sand & Gravel	27525 Covington Way SE	NFA issued following IRAP/VCP
26	Multicare Property Covington	17700 SE 272nd St & 17841 SE Wax Rd	Media affected: ground water and soil (confirmed); NFA issued following IRAP/VCP
30	Circle K / 76 / Tosco	17600 272nd St SE	Media affected: ground water and soil (confirmed); NFA issued following IRAP/VCP
40	Walgreens	27112 132nd Ave	NFA issued following IRAP/VCP
53	Columbia Greenhouse	12525 SE 248th	Media affected: ground water and soil (confirmed); NFA issued following IRAP/VCP

Ecology Leaking Underground Storage Tank (LUST) List: According to Ecology's Underground Storage Tank Regulations (WAC 173-360), owners and operators of registered USTs are required to report confirmed releases within 24 hours. Model Toxic Control Act Cleanup Regulation (WAC 173-340) requires that UST owners exempt from the registration process also report potentially dangerous releases. Releases from underground storage tanks (USTs) to soil and ground water which have been reported to Ecology are recorded on this list. The date of the release and the affected media, if known, are recorded along with the status of remedial action to date. Additional information regarding this list is available in the 1997 Wellhead Protection Plan. Thirteen reported LUSTs were identified within or immediately adjacent to the District area and are listed in Table 4.

Table 4: Leaking Underground Storage Tanks (LUST) list

Site No.	Site Name(s)	Site Address	Status
Sites awaiting remedial action			

41	Texaco #63 232 0182	13201 SE Kent Kangley Rd	Soil and ground water awaiting cleanup

Table 4: Leaking Underground Storage Tanks (LUST) list (cont.)

Site No.	Site Name(s)	Site Address	Status
55	Kent School District Maintenance	12033 SE 256th St	Soil and ground water awaiting cleanup; monitoring
Sites undergoing remediation			
23	Arco AM/PM Mini Market	17450 SE 272nd St	Soil cleanup started
46	BP Service Station #03138/ Exxon #7 2879	13054 Kent Kangley Rd	Soil and ground water cleanup started
51	7-Eleven Store/Union 76/Circle K	13131 SE 240th	Soil and ground water cleanup started; monitoring
Sites with some level of remediation completed			
10	Circle K/76/BP/Kayo Oil	16405 SE 272nd St	Soil and ground water reported cleaned up
21	Former Shell #246/Napa Auto Parts/ Harris Enterprises	17239 SE 272nd St	Soil and ground water reported cleaned up
28	Kent School District Meridian	25621 140th Ave SE	Soil reported cleaned up
30	Circle K/76/Tosco	17600 272nd St SE	Soil and ground water reported cleaned up
31	US DOE BPA Covington Substation	28401 Covington Way SE	Soil reported cleaned up
47	Springwood Apartments	27360/27361 129th Pl SE	Soil and ground water reported cleaned up
57	Kent School District 415 Junior High School (#6)	19640 SE 272nd St	Soil reported cleaned up
Sites not located in King County Assessor's data or during area reconnaissance			
34	Lakeside Industries	26010 180th Ave SE	Final cleanup report received

Washington Independent Cleanup Reports, Independent Remedial Action Program, and Voluntary Cleanup Program: Site remediation can be accomplished with varying degrees of oversight from Ecology personnel. Independent Cleanup Reports received by Ecology document remediation efforts undertaken by the owner or operator of a site without any oversight or approval by Ecology; this database is no longer updated by Ecology. The Voluntary Cleanup Program (VCP) and its predecessor the Independent Remedial Action Program (IRAP) offer varying degrees of fee-based technical assistance to those performing independent cleanup efforts. Remediation efforts performed under the VCP that meet state requirements may result in a written "No Further Action" (NFA) determination. Sites listed on these databases are indicated on Table 5.

Table 5: Washington Independent Cleanup Report/Voluntary Cleanup Program lists

Site No.	Site Name(s)	Site Address	Status
Sites with uncertain remediation status			
8	Kaufman Covington Property/Covrox, Inc.	27230 Covington Way SE	NFA after IRAP or VCP (being re-evaluated)
Sites undergoing remediation			
10	Circle K/76/BP/Kayo Oil	16405 SE 272nd St	Independent Remedial Action
13	Lake Meridian Dry Cleaners	15220 SE 272nd St	Independent Remedial Action
21	Former Shell #246/Napa Auto Parts/Harris Enterprises	17239 SE 272nd St	Interim cleanup reports on file
40	Walgreens	27112 132nd Ave	NFA after assessment, IRAP, or VCP

Site No.	Site Name(s)	Site Address	Status
41	Texaco #63 232 0182	13201 SE Kent Kangley Rd	Interim cleanup reports on file
46	BP Service Station #03138/Exxon #7 2879	13054 Kent Kangley Rd	Interim cleanup reports on file

Table 5: Washington Independent Cleanup Report/Voluntary Cleanup Program lists (cont.)

Site No.	Site Name(s)	Site Address	Status
51	7-Eleven Store/Union 76/Circle K	13131 SE 240th	Interim cleanup reports on file
55	Kent School District Maintenance	12033 SE 256th St	Interim cleanup report on file
Sites with some level of remediation completed			
11	Zerr Farm & Garden	15323 SE 272nd St	NFA after assessment, IRAP, or VCP
15	Lakeside Industries/Iddings Bark, Topsoil, Sand & Gravel	27525 Covington Way SE	NFA after assessment, IRAP, or VCP
26	Multicare Property Covington	17700 SE 272nd St 17841 SE Wax Rd	NFA after assessment, IRAP, or VCP
28	Kent School District Meridian	25621 140th Ave SE	Final cleanup report received
30	Circle K / 76 / Tosco	17600 272nd St SE	NFA after assessment, IRAP, or VCP
31	US DOE BPA Covington Substation	28401 Covington Way SE	Final cleanup report received (PCBs); Interim cleanup report received (petroleum)
37	Small & Sons Oil Dist Co	28449 144th Ave SE	Final cleanup report received
47	Springwood Apartments	27360/27361 129th Pl SE	Final cleanup report received
49	Puget Sound Energy	13025 SE 282nd Pl	Final cleanup report received
53	Columbia Greenhouse	12525 SE 248th	NFA after assessment, IRAP, or VCP
57	Kent School District 415 Junior High School (#6)	19640 SE 272nd St	Final cleanup report received
Sites not located in King County Assessor's data or during area reconnaissance			
34	Lakeside Industries	26010 180th Ave SE	Final cleanup report received

Ecology SPILLS database: As reported by EDR, there were 44 sites listed in this database that were reported to the Spill Prevention, Preparedness and Response Division of Ecology, several of which appear on other databases reported herein. These database entries correspond to Ecology's Environmental Response Tracking System (ERTS) records and include various reports, often from the public, which may or may not reflect a material spill. Complete initial and followup ERTS reports were obtained from Ecology and reviewed. These reports reflect 24 events at 22 sites, listed in Table 6, which confirmed either a release of material or ongoing activities, such as chronic dumping, which could contaminate groundwater sources. The other 20 database entries reflect no identified or confirmed material spills, the majority of which involve the discovery and removal of materials discarded from methamphetamine manufacture.

Table 6: SPILLS database

Site No.	Site Name(s)	Site Address	Status
3	Schreiber Homes	26000 152nd Ave SE	Minor gas spillage from above ground tank
4	N/A	26820 164th Ave SE	Complaint re: fluid leaks from amateur auto repair
5	Yousify, Abdullah and Mevan	28120 153rd Ave SE	30-35 gallon transformer oil/PCB spill; soil removed
6	Kent School District No 415	16807 SE 256th ST	500 gallon heating oil tank removed; concern re: contamination
11	Zerr Farm & Garden	15323 SE 272nd St	LUST at former gas station; NFA issued for soil and ground water
12	Wells Fargo Bank	27223 154th Ave SE	3 gallon transformer oil/PCB spill; soil removed

Site No.	Site Name(s)	Site Address	Status
14	Union 76/White Glove Car Wash	16703 SE 272nd St	Offsite discharge of soap and wastewater
15	Lakeside Industries/Iddings Bark, Topsoil, Sand & Gravel	27525 Covington Way SE	Mixed debris in wood/paper recycling operation
18	N/A	14800 SE 272nd St	Oil sheen on Lake Meridian; burned off

Table 6: SPILLS database (cont.)

Site No.	Site Name(s)	Site Address	Status
23	Arco AM/PM Mini Market	17450 SE 272nd St	2 SPILLS listings: 10 gallon gas spill during truck to tank transfer, no discharge offsite; 10 gallon gas spill on paved roadway, discharge to storm drain
30	Circle K / 76 / Tosco	17600 272nd St SE	LUST at former gas station; 10 yards of petroleum contaminated soil removed
32	N/A	24620 180th Ave SE	Heating oil UST punctured during site grading; 1-2 gallon spill on soil, removed with tank
33	N/A	24812 148th Ave SE	2 partial drums of non-chlorinated oil and water on District Well 3 driveway; removed
35	Gale Laning	13708 SE 256th Pl	15 gallon transformer oil/PCB spill; soil removed
36	Meridian Valley Country Club	24830 136th Ave SE	<1,000 gallon sewage overflow from manhole; vacuumed up and disinfected
45	N/A	276th & 132nd Ave SE	Truck wreck in Little Soos Creek; 6-8 quarts of fluid in creek
47	Springwood Apartments	12805 SE 275th & 27360/27361 129th Pl SE	1 gallon transformer oil/PCB spill, soil removed; leaking 500 gallon gas tank, 1 yard soil removed
50	Circle K Store 5490/ BP Store #11058	13122 SE 240th St	LUST; no soil sampling but BTEX confirmed in water
52	N/A	26801 195th Pl SE	5-10 yards of garbage/debris in residential back yard—no spill indicated
59	Bushaw, Linda M.	23215 132nd Ave SE	2 SPILLS listings for drug laboratory waste; chronic dumping site
60	Fesili, Papataia and Tusula Sivaivai	27650 121st Pl SE	Pickup of methamphetamine drub lab wastes—no spill indicated; also list on CDL database

Databases of Potential Contamination

Ecology Underground Storage Tank (UST) List: This report contains a list of regulated USTs, as defined in WAC 173-360, which have been registered with Ecology. However, certain USTs (e.g., home heating oil USTs) are exempt from the registration process and are typically not included on this list. Newly installed USTs have been required to meet leak detection requirements since December 1993 and existing USTs were required to meet corrosion protection and spill/overfill prevention requirements since December 1998. As such, USTs installed since 1998 likely represent a lower contamination potential than older USTs. Twenty-nine sites and 90 tanks (operational, removed, and in the process of closure) are included on this list, summarized in Table 7.

Table 7: Underground Storage Tanks (UST) list

Site No.	Site Name(s)	Site Address	Status

Site No.	Site Name(s)	Site Address	Status
2	Foss Market	16255 SE 256th St	Closure in progess (3 tanks)
9	Kent City UST100933/Station 75	15635 SE 272nd St	Operational (1 tank, diesel)
10	Circle K/76/BP/Kayo Oil	16405 SE 272nd St	Operational (2 tanks, unleaded; 1 tank, leaded) Closure in progress (2 tanks, unleaded; 2 tanks, leaded)
11	Zerr Farm & Garden	15323 SE 272nd St	Removed (3 tanks, unleaded)
14	Union 76/White Glove Car Wash	16703 SE 272nd St	Operational (2 tanks, unleaded)

Table 7: Underground Storage Tanks (UST) list (cont.)

Site No.	Site Name(s)	Site Address	Status
15	Lakeside Industries (Iddings Bark, Topsoil, Sand & Gravel)	27525 Covington Way SE	Exempt (2 tanks, diesel; 1 tank, leaded)
17	USWCOM Kent Meridian Co. /Qwest Communications	14422 SE 260th St	Operational (1 tank, diesel) Removed (1 tank)
21	Shell #246/Napa Auto Parts /Harris Enterprises	17239 SE 272nd St	Removed (1 tank, unleaded; 2 tanks, leaded)
22	Lift Station #10	14321 SE 255th Pl	Operational (1 tank, diesel) Removed (1 tank)
23	Arco AM/PM Mini Market	17450 SE 272nd St	Operational (2 tanks, unleaded; 1 tank, leaded)
28	Kent School District Meridian	25621 140th Ave SE	Removed (1 tank, waste oil; 1 tank, heating oil)
29	Station 72 UST 553	25620 140th Ave SE	Removed (1 tank, unleaded; 1 tank, unknown)
30	Circle K / 76 / Tosco	17600 272nd St SE	Operational (2 tanks, unleaded; 1 tank, leaded)
31	US DOE BPA Covington Substation	28401 Covington Way SE	Removed (1 tank, unleaded; 1 tank, leaded; 1 tank, waste oil; 2 tanks, unknown)
36	Meridian Valley Country Club	24830 136th Ave SE	Operational (1 tank, unleaded; 1 tank, diesel) Exempt (1 tank, diesel) Removed (1 tank, leaded)
41	Texaco #63 232 0182	13201 SE Kent Kangley Rd	Operational (4 tanks, unleaded) Removed (3 tanks, unleaded; 1 tank, leaded)
44	Safeway Fuel Center #1965 Chevron 96399	13101 Kent Kangley Rd/ 13055 Kent Kangley Rd	Not reported (1 tank, unleaded) Deferred (3 tanks, unleaded) Removed (2 tanks, unleaded; 1 tank, leaded; 1 tank, waste oil; 1 tank, unknown)
46	BP Service Station #03138 Exxon #7 2879	13054 Kent Kangley Rd	Operational (2 tanks, unleaded; 1 tank, leaded; 1 tank, waste oil)
47	Springwood Apartments	27360 129th Pl SE	Closure in process (1 tank, unleaded)
50	Circle K Store 5490 (BP Store #11058)	13122 SE 240th St	Operational (2 tanks, unleaded; 1 tank, leaded)
51	7-Eleven Store/Union 76/Circle K	13131 SE 240th	Operational (2 tanks, unleaded; 1 tank, leaded)
53	Columbia Greenhouse	12525 SE 248th	Exempt (3 tanks, heating oil) Removed (1 tank, leaded)
55	Kent School District Maintenance	12033 SE 256th St	Closure in process (1 tank, leaded)
56	Meadow Hills Pump Station	12130 SE 256th St	Removed (1 tank, unknown)
57	Kent School District 415 Junior High School (#6)	19640 SE 272nd St	Removed (1 tank, leaded; 1 tank, unknown)
58	Paul Reilley	12648 SE 282nd	Removed (2 tanks, unleaded)

Site No.	Site Name(s)	Site Address	Status
Sites not located in King County Assessor's data or during area reconnaissance			
34	Lakeside Industries	26010 180th Ave SE	Removed (1 tank, diesel; 1 tank, leaded; 1 tank, unknown)
61	Building 7-90	22480 132nd Ave SE	Removed (1 tank, unknown)

EPA Region 10, Resource Conservation and Recovery Information System (RCRIS): This system contains information on sites that generate, transport, store, treat and/or dispose of hazardous waste as defined by the Resource Conservation and Recovery Act (RCRA). Sites on this list have the potential to contaminate should spills, inappropriate storage or disposal, or mishandling of materials occur. Only small quantity generators (SQG), generating between 220 and 2,200 pounds of hazardous material per month, and conditionally exempt small quantity generators (CESQG), generating less than 220 pounds of hazardous material per month, were identified; no large quantity generators (LQG) were found. Table 8 lists the 22 SQGs that were identified.

Table 8: RCRA Small Quantity Generators

Site No.	Site Name(s)	Site Address	Status
1	Kentwood High School	25800 164th SE	CESQG
10	Circle K/76/BP/Kayo Oil	16405 SE 272nd St	CESQG
13	Lake Meridian Dry Cleaners	15220 SE 272nd St	CESQG
16	US Transmissions Inc	27623 Covington Way SE	CESQG
17	USWCOM Kent Meridian Co./ Qwest Communications	14422 SE 260th St	SQG
19	Lees Cleaners	17051 SE 272nd St, Ste. 25	CESQG
20	Blair Industries	26872 172nd Pl SE	SQG
21	Former Shell #246/Napa Auto Parts/Harris Enterprises	17239 SE 272nd St	SQG
23	Arco AM/PM Mini Market	17450 SE 272nd St	SQG
25	US DOJ DEA Wax Rd	18065 SE Wax Rd	CESQG
26	Multicare Property Covington	17700 SE 272nd St and 17841 SE Wax Rd	SQG
27	Kent Meth Lab	15242 SE 280th St	SQG
30	Circle K / 76 / Tosco	17600 272nd St SE	CESQG
31	US DOE BPA Covington Substation	28401 Covington Way SE	CESQG
41	Texaco #63 232 0182	13201 Kent Kangley Rd	SQG
43	Meridian Cleaners	12908 Kent Kangley Rd	SQG
46	BP Service Station #03138/ Exxon #7 2879	13054 Kent Kangley Rd	CESQG
48	PSE/Williams Covington Gate Station #1348	19241 SE 272nd Ave	SQG
50	Circle K Store 5490 (BP Store #11058)	13122 SE 240th St	SQG
54	Knudson Oil Environmental SVC	26432 197th Pl SE	SQG
55	Kent School District Maintenance	12033 SE 256th St	CESQG
Site not located in King County Assessor's data or during area reconnaissance			
34	Lakeside Industries	26010 180th Ave SE	SQG

Additional sites of potential contamination: The following ten sites were identified during our site investigation. While the sites listed in Table 9 were not identified on the databases reviewed by EDR, these businesses are very similar to some of those that are listed in the above databases. Based on this similarity, databases that represent the possible types of potential contamination posed by these databases are also listed in Table 9.

Table 9: Sites of Potential Contamination Not Listed in Reviewed Databases

Site No.	Site Name(s)	Site Address	Possible Database Listing
62	United Rentals (Forte Rentals/Taylor Rentals)	27115 164th Ave SE	Possible RCRIS SQG, UST
63	Unnamed Storage Yard	26712 124th Ave SE	Possible RCRIS SQG
64	Auburn School District #408	12901 SE 290th Pl	Possible RCRIS SQG, UST
65	HP Carwash	23907 132nd Ave SE	Possible RCRIS SQG
66	Jiffy Lube	17410 SE 272nd St	Possible RCRIS SQG
67	Certified Brake & Muffler	15320 SE 272nd St	Possible RCRIS SQG
68	Covington Cleaners	17239 SE 272nd St	Possible RCRIS SQG
69	Napa Auto Parts	17307 SE 272nd St	Possible RCRIS SQG
70	Les Schwab Tire Center	17235 SE 272nd St	Possible RCRIS SQG
71	Schuck's Auto Supply	17709 SE 272nd St	Possible RCRIS SQG

Discussion

This report provides an updated inventory of potential contaminant sources, as indicated by a review of the available environmental databases. Many of these sites were previously identified during the course of the database review and the subsequent field reconnaissance performed for the 1997 WHPP. No ranking of these potential contamination sources was proposed or performed as part of this investigation. However, sites in close proximity to District wells should generally be of greater concern to the District than sites further away. Specifically, sites within Zone 1 (the 1-year horizontal time-of-travel boundary) of District wells are of immediate concern whereas sites within Zone 2 (the 5-year horizontal time-of-travel boundary), Zone 3 (the 10-year horizontal time-of-travel boundary), and the buffer zone of District wells are of less-immediate concern. The level of contamination risk to District wells should also be incorporated into decision making processes, with greater weight (at least initially) given to sites with known or suspected contamination issues, followed by sites or activities with the potential to contaminate groundwater resources but no known actual contamination.

The hazard inventory contained herein consists of known, suspected, or potential sources of point-source contamination identified in the reviewed environmental databases or identified during the December 30, 2004 reconnaissance of the area. As noted in the 1997 WHPP, the relatively shallow depth to ground water and coarse-grained deposits identified at ground surface in a portion of the study area produce relatively susceptible conditions for ground water contamination. This is particularly true for the North Meridian Aquifer. However, the placement of Wells 1, 2, and 4 into emergency standby status means that production from this system is minimized, thereby decreasing this contamination risk. The contamination potential is substantially lower for the deep aquifer system (Wells 5, 6, and 7) and lower yet for the aquifer tapped by Well 9. The following discussion briefly summarizes the potential groundwater quality concerns associated with sites of known contamination and land use within the WHPAs.

Well Nos. 1, 2, 3 and 4

Because of the shallow nature of the North Meridian Aquifer, Well Nos. 1, 2, 3 and 4 are relatively susceptible to contamination events. However, no sites of known contamination were identified within Zone 1 for these wells. The four sites of known contamination identified within Zone 2 (Sites 28, 33, 35, and 36) were primarily due to small spill events and are all reported to have been cleaned up. Three sites of known contamination in Zone 3 (Sites 50, 51, and 53) were all related to LUSTs, two of which are reported cleaned up. According to the SPILLS database, the third site (Site 50) has a LUST with some groundwater contamination identified. The cleanup status of this site is unknown; however, Site 50 is approximately 2,700 feet away and somewhat cross-gradient from the only producing well (Well 3) and likely represents a relatively low

contamination potential. The primary land-use hazards, identified in the 1997 WHPP, are related to the presence of storm water detention ponds and public parks on or adjacent to well parcels.

Wells 5/5A

Only one site of known contamination (Site 53) was identified in Zone 1 of Wells 5/5A. Both groundwater and soil contamination was present, presumably due to a LUST, however both are reported to be cleaned up. Three sites of known contamination, two SPILLS sites (Sites 35 and 36) and one LUST (Site 28), were identified within Zone 2 of Wells 5/5A, all of which are reported to have been remediated. Only one site of known contamination due to a minor spill (Site 33) was identified within Zone 3, and this site has also been cleaned up. The primary land-use hazard related to these wells is due to the location of storm water detention ponds on or adjacent to the well parcel.

Wells 6 and 7

Three sites of known contamination were found within the combined Zone 1 of Wells 6 and 7: two SPILLS sites (Sites 45 and 47), a LUST site (Site 47), and a site listed on the WA ICR database due to an unnamed source of contamination (Site 49). The contamination at all three sites was either of very minor extent or reported as cleaned up. Two sites, a presumed LUST (Site 37) and potentially chronic dumping site for drug wastes (Site 60) were identified within Zone 2 of these wells, both of which have been remediated. Cleanup of Site 41 (a LUST), the only site identified within Zone 3, is reported as ongoing. Agricultural use of property adjacent to Well 7 was the predominant land-use hazard identified in the 1997 WHPP.

Well 9

Due to the orientation of the delineated capture zones for Well 9 along the SE 272nd Street corridor, a greater number of hazards were identified for this well than for the District's other wells. However, the depth and confinement of the Well 9 aquifer also provides for substantially greater protection from contamination than at any other District well. Three sites of known contamination were identified within Zone 1 and reported to be cleaned up: Sites 11 and 13 (CSCSL sites) and Site 12, a minor spill site. Eight sites identified within Zone 2 of Well 9 have already been remediated: Sites 4, 5, 14 and 18 (SPILLS); Site 21 (LUST); Site 26 (CSCSL); Site 30 (LUST/SPILLS); and Site 31 (LUST). An additional three sites are currently undergoing remediation: Site 10 (CSCSL/LUST); Site 15 (CSCSL/SPILLS); and Site 23 (LUST/SPILLS). Despite having received a No Further Action designation from Ecology following some site remediation, the final Zone 2 site, Site 8 (former COVROX, Inc. site), is still listed on the Washington State Hazardous Sites List and the NFA designation is currently being re-evaluated. As such, the status of the cleanup of this site should remain of concern to the District. Three sites were identified within Zone 3: Site 48 (CSCSL); Site 52 (SPILLS), and Site 57 (LUST). Of these, only Site 48 is listed as still awaiting cleanup. As at Wells 5/5A, the primary land-use hazard is due to the location of storm water detention ponds on the well parcel.

Land Use

Zoning and the land uses it regulates are more regional in nature and can also have an impact on the quality of water resources. The 1997 WHPP incorporated an extensive review of historical land use through aerial photographs and maps and identified some contamination potential, particularly from commercial and industrial land use associated with gasoline stations and retail stores. A compilation of zoning in 1997 identified land use ranging from rural-residential to urban, medium-density development, with some continued commercial and industrial land use.

Roth Hill reviewed the land use information presented in Figure 5.1 of the 1997 WHPP; an updated land use map within the WHPP areas is presented in Chapter 2 of this report. As land use has not changed substantially, the contamination risk from these sources is largely unchanged from that identified in 1997. Medium and rural density residential development (including smaller agricultural concerns) and industrial/commercial land use have the potential to introduce nitrates, pesticides, and petroleum hydrocarbons into the shallow subsurface. Major transportation corridors may also introduce metals, in addition to pesticides and petroleum hydrocarbons.

The statements, conclusions, and recommendations provided in this report are to be exclusively used within the context of this document. They are based upon generally accepted hydrogeologic practices and are the result of analysis by Robinson, Noble & Saltbush, Inc. staff. This report and any attachments to it are for the exclusive use of Roth Hill Engineering Partners, LLC. Unless specifically stated in the document, no warranty, expressed or implied, is made.

APPENDIX

Environmental Data Resources, Inc. (EDR) Report

Disk copy of EDR Report

on file at the District

Summary Hazard Table B1

Table B1. Summary of known, suspected, or potential sites of point-source contamination

Site No.	EDR Identification No.	Site Name	Site Address	King County Parcel No.	Listing Databases	Comments
1	3	Kentwood High School	25800 164th SE	2522059006	RCRIS-SQG, FINDS	
2	B4-5	Foss Market	16255 SE 256th St	2622059027	UST, FINDS	Matches "Machine Shop or Works" parcel in 1997 WHPP--listed as Hazard Scale--LS
3	6	Schreiber Homes	26000 152nd Ave SE	8586400070	SPILLS	
4	7	N/A	26820 164 Ave SE	2622059098	SPILLS	
5	8	Yousify Abdullah and Mevan	28120 153rd Ave SE	5468600070	SPILLS	
6	9	Kent School District No 415	16807 SE 256th St	2522059077	SPILLS	
7	10	King County DOT Calhoun Pit	156th Pl SE & SE 272 St	2622059016	FINDS	Calhoun Pit
8	C12, 15-16	Kaufman Covington Property/Covrox, Inc. (now Bowen Scarff Ford)	27230 Covington Way / 27230 162nd Ave SE	3522059084, 3522059074, 3522059075	BROWNFIELDS, FINDS (x2), CSCSL, HSL,VCP, CSCSL NFA	Contacted DOE--Kaufman Covington and COVROX are the same property consisting of 3 parcels (now Bowen Scarff Ford dealership)
9	D13-14	Kent City UST100933/Station 75	15635 SE 272nd St	3522059180	UST, FINDS	Fire Station w/ Onsite Pump--LS
10	E18-20	Circle K/76/BP/Kayo Oil	16405 SE 272nd St	3622059120	LUST, RCRIS-SQG, CSCSL, FINDS, UST, VCP, WA ICR	
11	F23	Zerr Farm & Garden	15323 SE 272nd St	3522059134	SPILL, WA ICR, UST, CSCSL NFA, VCP, FINDS	Lake Meridian Auto Center (Greg's Japanese Auto Service/Meridian Transmission Center/Walts Auto Care Center)
12	D25	Wells Fargo Bank	27223 154th Ave SE	3522059057	SPILLS	
13	F26	Lake Meridian Dry Cleaners	15220 SE 272nd St	2622059064	RCRIS-SQG, FINDS, CSCSL, VCP	In Meridian Town Square
14	G30-31,36	Covington Chevron & Car Wash	16703 SE 272nd St	3622059070	UST, FINDS, SPILLS	Previously Covington Chevron & Carwash
15	H32-35	Lakeside Industries/Iddings Bark, Topsoil, Sand & Gravel	27525 Covington Way SE	3522059208	CSCSL NFA, VCP, UST, FINDS, SPILLS	Listed as Hazard Scale--MD in 1997 WHPP
16	H38	US Transmissions Inc	27623 Covington Way SE	3622059033	RCRIS-SQG, FINDS	In Table 5.7 of 1997 WHPP; Dauntless Motors Corporation on 27635 Covington Way located at southern end of same parcel
17	J39-40	USWCOM Kent Meridian Co./Qwest Communications	14422 SE 260th St	2722059220	UST, RCRIS-SQG, FINDS	USWCOM Kent Meridian Co.--LS
18	I42	N/A	14800 SE 272nd St	N/A	SPILLS	
19	43	Lees Cleaners	17051 SE 272nd, Ste. 25	3622059195	RCRIS-SQG, FINDS	
20	K45	Blair Industries	26872 172nd Pl SE	2569600120	RCRIS-SQG, FINDS	
21	L46-49	Former Shell #246/Napa Auto Parts/Harris Enterprises	17239 SE 272nd St	3622059142	WA ICR, RCRIS-SQG, FINDS, LUST, UST	Gas station gone (now KFC) and NAPA moved west into mall; address on stripmall building (17239) is listed w county for the adjacent parcel (3622059142)
22	M50-51	Soos Creek Water & Sewer Lift Station #10/UST 2751	14321 SE 255th Pl	5469503260	UST, FINDS	
23	N52-55	Arco AM/PM Mini Market	17450 SE 272nd St	2522059032	LUST, SPILLS, UST, HMIRS, RCRIS-SQG, FINDS	
24	56	Residential (EXEMPT) Willard, Ralph	24241 156th Ave SE	2322059051	FINDS	
25	57	US DOJ DEA Wax Rd	18065 SE Wax Rd	1922069132	RCRIS-SQG, FINDS	
26	N58-59, 61-62, P80-81	Multicare Property Covington	17700 SE 272nd St & 17841 SE Wax Rd	059131 & 252205	FINDS (X3), WA ICR (X2), CSCSL-NFA, RCRIS-SQG	Two parcels of the Covington Medical Park--LS
27	60	Kent Meth Lab	15242 SE 280th St	3522059047	RCRIS-SQG, FINDS	WDOE NRO Kent Meth. Lab--LS
28	O63/S86-88	Kent School District Meridian	25621 140th Ave SE	2722059062	WA ICR, UST, LUST, FINDS	Address for UST/LUST is 24521 140th Ave SE, but DOE Facilities website plots at 25621 140 Ave SE; confirmed with DOE that 25621 is the correct address--UST & LUST databases are being corrected
29	O64	King County Fire Dept. Station 72	25620 140th Ave SE	2722059161	FINDS, UST	
30	P66-70	Circle K / 76 / Tosco	17600 272nd St SE	2522059130	UST, SPILLS (x2), LUST, WA ICR, RCRIS-SQG, FINDS, CSCSL NFA, VCP	In Table 5.6 of 1997 WHPP--reparceled from 17624 SE 272nd in databases
31	Q71-74	US DOE BPA Covington Substation	28401 Covington Way SE	3622059010	CERCLIS, RCRIS-SQG, FINDS, WA ICR, ERNS, LUST, UST	ERNS listing due to PCB release from transformer; absorbent blankets used/soil removed
32	75	N/A	24620 180th Ave SE	N/A	SPILLS	Address does not currently exist; located at most likely parcel
33	76	King County	24812 148th Ave SE	2322059013	SPILLS	Driveway of Well 3, address not in Assessor's data; parcel address is 24820 148TH AV SE; Soos Creek Park/Green River Shop on same parcel
34	R78-79	Lakeside Industries	26010 180th Ave SE	N/A	WA ICR, UST, RCRIS-SQG, FINDS, LUST	NOT LOCATED; In Table 5.6 of 1997 WHPP; intersection of SR18 and 180th (overpass) -possible temp asphalt batch plant for road work?
35	82	Gale Laning	13708 SE 256th Pl	4051300100	SPILLS	
36	U91-93	Meridian Valley Country Club	24830 136th Ave SE	5469503681	FINDS, SPILLS, UST	Listed in Table 5.7 in 1997 WHPP
37	98	Small & Sons Oil Dist Co	28449 144th Ave SE	3422059108	WA ICR	
38	W100	AT&T Covington	15041 SE 288th St	0221059008	FINDS	6 cellular phone antennae on site
39	101	Franklin, Patrick and Elizabeth (property owners)	18019 SE 279th Pl	3981200260	ERNS	Release of unknown quantity of white, oil-based paint to ditch
40	X102	Walgreens	27112 132nd Ave SE	2722059173	FINDS, CSCSL NFP, VCP	(Old address on other side of building--prior to remodel? 13210 Kent Kangley Road)
41	X103-105, Y116	Texaco #63 232 0182	13201 SE Kent Kangley Rd	6792200010	RCRIS-SQG, FINDS, LUST, UST, WA ICR	Y116 mislocated due to transposed address--same site
42	108	Residential (EXEMPT) Kirkland, David	25014 132nd Ave	2222059064	FINDS	
43	X109	Meridian Cleaners	12908 Kent Kangley Rd	2822059062	RCRIS-SQG, FINDS	
44	X111-112,Y114-5	Safeway Fuel Center #1965/Chevron 96399	13101 SE Kent Kangley Rd	3322059135	FINDS (X2), UST (X2)	In Table 5.6 of 1997 WHPP; parcel now includes 13055 Kent Kangley
45	Z117	N/A	276th / 132 Ave SE	N/A	SPILLS	
46	Y118-120	BP Service Station #03138/Exxon #7 2879	13054 Kent Kangley Rd	2822059203	RCRIS-SQG, FINDS, LUST, UST, WA ICR	Listed as Hazard Scale--MS in 1997 whpp
47	Z121	N/A	12805 SE 275th	N/A	SPILLS	

Table B1. Summary of known, suspected, or potential sites of point-source contamination

Site No.	EDR Identification No.	Site Name	Site Address	King County Parcel No.	Listing Databases	Comments
47	AA124-6	Springwood Apartments	27360 & 27361 129th Pl SE	3322059001	SPILLS, WA ICR, UST,FINDS, LUST	King County Housing Authority; previously identified in 1997 on Fig 5.2 as Minor Scale hazardous generator but listed in Mixed Scale generator list of appendix; combined with AA126
48	132	PSE/Williams Covington Gate Station #1348	19241 SE 272nd Ave	3122069032	RCRIS-SQG, CSCSL, FINDS	Address not listed, located on parcel between 19235 & 19401 SE 272nd Ave--EDR listed as Northwest Pipeline Covington
49	136	Puget Sound Energy	13025 SE 282nd Pl	8133500090	WA ICR	
50	AC140-142	Circle K Store 5490 (BP Store #11058)	13122 SE 240th St	1622059116	UST, SPILLS, RCRIS-SQG, FINDS	listed in Table 5.6 in 1997 WHPP
51	AC145-146	7-Eleven Store/Union 76/Circle K	13131 SE 240th St	2122059154	LUST, UST, WA ICR	Old Southland #20188--on Table 5.6 of 1997 WHPP
52	147	N/A	26801 195th Pl SE	N/A	SPILLS	Address does not exist, approximate location mapped
53	AD148-149	Columbia Greenhouse	12525 SE 248th	2122059132	WA ICR, UST, CSCSL NFA, FINDS, VCP	Identified in 1997 WHHP--Marked on Fig 5.2 as Mixed Scale hazardous generator but listed in Large Scale generator list of appendix as "Fleet Vehicles--onsite fuel"
54	150	Knudson Oil Environmental SVC	26432 197th Pl SE	8562000260	RCRIS-SQG, FINDS	
55	AF154-155	Kent School District Maintenance	12033 SE 256th St	2822059177	RCRIS-SQG, FINDS, LUST, WA ICR, UST, FTTS INSP	Different address now (12101 SE 256TH ST); previously UST only
56	AF157	Meadow Hills Pump Station	12130 SE 256th St	5412300550	UST	Sewer facility; green electrical box visible; UST for generator backup???? Located as parcel immediately east of new house on corner at 25515 122nd PL SE
57	AG158-160	Kent School District 415 Junior High School (#6)	19640 SE 272nd St	2922069030	LUST, UST, FINDS, WA ICR	Identified in 1997 WHPP--located across 272nd from school; reparceled/address change from 19600 SE 272
58	AH161-162	Paul Reilley	12648 SE 282nd St	1888000045	FINDS, UST	
59	AI164-165	Bushaw Linda M	23215 132nd Ave SE	1622059021	SPILLS	Two incidents
60	169	Fesili, Papataia and Tusula Sivaivai	27650 121st Pl SE	3830620450	SPILLS, CDL	
61	AL181-182	Building 7-90	22480 132nd Ave SE	1522059163	UST, FINDS	NOT LOCATED; area being redeveloped for housing project; old facility gone
62	N/A	United Rentals (Forte Rentals/Taylor Rentals)	27115 164TH Ave SE	2622059126	None	Identified in 1997 WHHP--Marked on Fig 5.2 as Mixed Scale hazardous generator but listed in Large Scale generator list of appendix as Fleet Vehicles--onsite fuel; Identified during hazard inventory
63	N/A	Unnamed Storage Yard	26712 124TH Ave SE	2822059110	None	Identified in 1997 WHHP--Marked on Fig 5.2 as Mixed Scale hazardous generator but listed in Large Scale generator list of appendix as "Fleet Vehicles--onsite fuel" Found during hazard inventory due to old cars/junk
64	N/A	Auburn School District #408	12901 SE 290th Pl	0421059070	None	Reparceled--portion indicated in 1997 WHPP for unknown reason; NEW SCHOOL being built--possible UST/Septic
65	N/A	HP Carwash	23907 132nd Ave SE	1622059132	None	Found during hazard inventory
66	N/A	Jiffy Lube	17410 SE 272nd St	2522059015	None	Address per building and DexOnline is 27125 174th Place SE
67	N/A	Certified Brake & Muffler	15320 SE 272nd St	2622059063	None	Found during hazard inventory; Previously Deano's Meridian Brake & Muffler
68	N/A	Covington Cleaners	17239 SE 272nd St	3622059042	None	Dry cleaners next suite (#108) south of NAPA (69); address on building (17239) is listed for an adjacent parcel
69	N/A	Napa Auto Parts	17307 SE 272nd St	3622059042	None	Mapped at current location to reflect current hazard; moved from 17239 SE 272 across parking lot
70	N/A	Les Schwab Tire Center	17235 SE 272nd St	3622059048	None	Found during hazard inventory
71	N/A	Schuck's Auto Supply	17709 SE 272nd St	3622059062	None	Found during hazard inventory

Appendix N

Water Produced and Purchased

THIS PAGE INTENTIONALLY BLANK.

Lake Meridian Water District
Water Comprehensive Plan
Appendix N

Lake Meridian Water Production & Purchase 2011

Month:	Well #3 Gallons:	Well #5 Gallons:	Well #6 Gallons:	Well #9 Gallons:	Auburn Gallons:	Duberry Gallons:
January	2,514,618	219879	4,846,069	0	25,003,999	14,960
February	4,410,576	353806	4,315,338	0	22,630,997	7,480
March	3,581,177	135925	2,020,203	238678	20,798,189	4,666,813
April	1,276,978	241867	4,248,871	4137085	14,078,355	10,652,642
May	3,282,074	223877	4,020,264	5358673	7,535,044	18,272,959
June	330,322	91,949	5,970,978	4,420,074	9,294,980	19,977,020
July	6,166,351	1,389,236	4,315,338	10,036,560	25,859,478	4,503,525
August	6,462,433	1,400,230	8,212,738	14,067,902	26,346,195	4,004,803
September	5,634,613	1,894,958	4,512,726	8,303,375	27,430,903	-
October	1,899,353	778,572	3,980,988	6,632,629	24,231,999	-
November	986,938	156,914	6,049,530	5,927,673	22,290,998	-
December	2,510,651	1,220,329	5,961,914	974,854	26,004,998	-
Total:	**39,056,084**	**8,107,542**	**58,454,957**	**60,097,503**	**251,506,135**	**62,100,202**

Total Usage **479,322,423** **Gallons**

Lake Meridian Water Production & Purchase 2012

Month:	Well #3 Gallons:	Well #5 Gallons:	Well #6 Gallons:	Well #9 Gallons:	Auburn Gallons:	Tacoma Gallons:
January	188,324	1860977	3,639,587	8595428	21,640,000	
February	1,882,233	1237320	1,891,296	2695953	23,552,000	
March	1,364,594	787567	3,353,577	3313293	25,632,000	
April	1,719,086	842537	4,627,533	3062531	24,044,000	
May	7,559,143	1659088	7,898,514	68481	24,573,000	
June	3,432,129	1,050,423	5,348,602	31,219	29,259,000	
July	4,252,899	1,406,227	8,273,163	4,198,517	28,541,770	2,798,000
August	5,861,206	1,579,132	11,505,890	12,707,336	30,304,000	
September	3,965,881	1,542,152	8,093,903	10,019,958	29,237,000	
October	2,322,327	960,472	7,874,359	5,110,352	23,710,000	
November	1,904,388	262,856	5,555,054	3,874,023	23,230,000	
December	2,715,088	215,881	1,572,052	5,279,297	24,566,010	
Total:	**37,167,298**	**13,404,632**	**69,633,530**	**58,956,388**	**308,288,780**	**2,798,000**

Total Usage **490,248,628** **Gallons**

Lake Meridian Water Production & Purchase 2013

Month:	Well #3 Gallons:	Well #5 Gallons:	Well #6 Gallons:	Well #9 Gallons:	Auburn Gallons:
January	2,945,000	132000	449,000	6476000	23,484,000
February	2,740,000	201000	759,000	5583000	22,472,000
March	1,546,000	847000	4,478,000	2613000	25,488,000
April	1,735,000	900000	2,464,000	7323000	21,859,000
May	3,952,000	1788000	7,367,000	12528000	17,046,000
June	2,889,000	811,000	3,308,000	6,995,000	29,145,000
July	4,265,000	1,575,000	13,681,000	14,686,000	30,380,000
August	3,052,000	1,063,000	12,762,000	11,778,000	30,871,000
September	2,038,000	556,000	4,151,000	4,937,000	29,770,000
October	1,800,000	654,000	5,200,000	6,965,000	23,108,000
November	1,923,000	506,000	4,613,000	5,464,000	22,452,000
December	2,277,000	5,282,000	5,282,000	7,008,000	23,144,000
Total:	**31,162,000**	**14,315,000**	**64,514,000**	**92,356,000**	**299,219,000**

Total Usage **501,566,000** **Gallons**

Lake Meridian Well Water Production & Purchase 2014

Month:	Well #3 Gallons:	Well #5 Gallons:	Well #6 Gallons:	Well #9 Gallons:	Auburn Gallons:
January	2,432,098	665634	5,614,471	5650391	23,121,000
February	1,823,822	655640	5,519,806	5180664	20,696,000
March	2,078,613	728600	5,338,531	6387697	23,073,000
April	1,321,501	677628	6,440,277	6003906	22,369,600
May	1,954,742	658638	8,111,023	7776367	23,104,700
June	4,827,942	2,077,858	6,840,088	1,177,949	29,512,900
July	4,268,005	2,041,878	12,928,894	16,953,125	30,838,200
August	5,441,238	2,650,543	9,366,852	11,796,875	30,852,500
September	4,284,119	2,590,576	4,641,632	5,788,086	29,862,500
October	2,357,574	751,587	7,376,862	5,042,969	23,188,750
November	597,198	249,863	5,565,125	8,506,836	21,816,920
December	1,624,420	771,576	6,593,353	5,468,750	23,101,230
Total:	**33,011,272**	**14,520,021**	**84,336,914**	**85,733,615**	**301,537,300**

Total Usage **519,139,122** **Gallons**

Lake Meridian Well Water Production & Purchase 2015

Month:	Well #3 Gallons:	Well #5 Gallons:	Well #6 Gallons:	Well #9 Gallons:	Duberry Gallons:	Covington Gallons:
January	2,312,000	691,000	6,319,000	5,172,000	23,098,988	-
February	1,394,806	733,597	4,671,844	5,948,242	20,863,964	-
March	3,100,800	1,100,395	5,749,420	4,837,891	23,061,588	-
April	3,456,299	597,672	5,261,993	5,622,070	22,350,240	-
May	5,963,928	386,787	4,458,344	13,343,750	23,083,280	-
June	8,745,483	580,681	4,657,745	20,354,492	30,492,968	-
July	4,329,437	-	6,247,925	21,844,727	30,826,576	-
August	2,196,442	1,221,329	7,464,478	11,366,211	30,665,008	-
September	828,827	251,862	5,395,477	5,930,664	29,805,556	-
October	1,208,496	297,836	5,300,781	10,424,805	23,166,308	-
November	2,001,068	576,683	4,583,008	7,644,531	22,373,428	-
December	1,703,979	563,690	5,078,125	8,682,617	23,047,376	-
Total:	**37,241,565**	**7,001,532**	**65,188,141**	**121,172,000**	**302,835,280**	**0**

Total Usage **533,438,518** **Gallons**

Lake Meridian Well Water Production & Purchase 2016

Month:	Well #3 Gallons:	Well #5 Gallons:	Well #6 Gallons:	Well #9 Gallons:	Duberry Gallons:	Covington Gallons:
January	2,192,413	419,769	5,048,828	8,371,094	23,116,940	-
February	2,394,836	1,010,445	2,201,172	8,262,695	21,620,940	-
March	2,948,730	1,695,068	329,102	10,084,961	23,268,784	-
April	1,751,312	807,556	-	15,235,352	22,358,468	-
May	7,798,828	1,051,422	-	17,371,094	23,099,736	-
June	2,747,314	586,678	7,708,008	8,098,633	29,538,520	-
July	4,398,926	169,907	10,440,430	14,600,586	30,879,684	-
August	6,332,520	587,677	9,654,297	18,642,578	30,676,976	-
September	5,993,134	1,216,331	9,109,375	1,115,234	29,623,792	-
October	5,469,452	981,461	9,771,484	477,539	23,367,520	-
November	5,018,280	971,466	8,373,047	819,336	22,421,300	-
December	5,034,393	973,465	8,743,164	343,750	24,330,944	-
Total:	**52,080,139**	**10,471,245**	**71,378,906**	**103,422,852**	**304,303,604**	**0**

Total Usage **541,656,746** **Gallons**

Lake Meridian Well Water Production & Purchase 2017

Month:	Well #3 Gallons:	Well #5 Gallons:	Well #6 Gallons:	Well #9 Gallons:	Duberry Gallons:	Covington Gallons:
January	5,911,560	2,757,484	9,587,891	1,068,359	337,287	15,203,300
February	4,285,126	1,757,034	7,331,055	-	113	21,148,500
March	5,121,002	1,523,163	8,286,133	-	2	22,692,100
April	4,992,096	1,446,205	7,947,266	-	6	23,647,600
May	5,856,171	1,458,603	9,599,609	-	16	22,834,600
June	1,339,000	492,000	6,233,000	4,940,000	-	35,748,900
July	2,592,066	982,910	11,611,328	11,586,914	20	38,900,200
August	4,700,000	1,667,725	9,088,868	12,139,648	126	37,916,300
September	1,420,000	695,892	7,130,859	5,884,765	4	29,282,500
October	1,900,026	1,268,921	-	7,792,968	19	27,892,500
November	3,100,000	121,856	3,612,305	3,157,226	-	22,294,800
December	3,600,032	100,078	4,615,235	1,322,266	-	21,942,400
Total:	**44,817,079**	**14,271,871**	**85,043,549**	**47,892,146**	**337,593**	**319,503,700**

Total Usage **511,865,938** **Gallons**

Lake Meridian Well Water Production & Purchase 2018

Month:	Well #3 Gallons:	Well #5 Gallons:	Well #6 Gallons:	Well #9 Gallons:	Duberry Gallons:	Covington Gallons:
January	4,005	174	4,662	2,401	-	24,657,300
February	1,543	165	6,598	1,197	-	20,225,300
March	1,810	173	3,556	5,364	-	22,725,000
April	1,760	166	-	12,173	-	20,285,400
May	2,222	199	359	17,233	-	24,682,400
June	2,212	169	4,015	14,447	-	33,694,900
July	2,397	980	5,320	21,221	-	35,440,900
August	3,421	1,891	3,365	11,396	-	42,697,100
September	3,061	1,309	977	2,911	-	36,024,000
October	2,095	763	5,009	2,169	-	25,021,300
November	1,336	641	7,199	2,077	-	22,859,500
December	2,490	751	3,157	3,868	-	23,746,200
Total:	**28,350**	**7,383**	**44,217**	**96,458**	**0**	**332,059,300**

Total Usage **332,235,708** **Gallons**

Lake Meridian Well Water Production & Purchase 2019

Month:	Well #3 Gallons:	Well #5 Gallons:	Well #6 Gallons:	Well #9 Gallons:	Duberry Gallons:	Covington Gallons:
January	2,054,443	905,365	3,565,430	3,925,781	12,445,483	24,416,400
February	625,397	652,588	4,290,039	6,347,656	-	21,225,200
March	2,223,633	746,246	3,740,234	5,444,336	-	23,553,300
April	2,357,574	786,530	4,054,688	4,624,023	-	22,992,500
May	2,194,427	760,345	9,585,938	8,201,172	-	22,552,100
June	2,616,394	878,174	8,946,289	8,578,125	-	31,151,500
July	2,717,102	917,450	9,791,992	6,580,078	-	34,906,000
August	3,052,460	758,331	11,528,320	6,297,852	-	35,676,000
September	2,016,174	594,177	3,732,422	6,084,961	17,939,300	29,422,000
October	703,949	6,042	5,039,063	6,222,656		23,607,000
November	1,590,179	20,142	4,607,422	5,558,594		23,251,000
December	2,246,796	2,014	3,610,352	5,116,211		23,205,000
Total:	**24,398,529**	**7,027,405**	**72,492,188**	**72,981,445**	**30,384,783**	**315,958,000**

Total Usage **523,242,349** **Gallons**

THIS PAGE INTENTIONALLY BLANK.

Appendix O

Satellite Management Policy

THIS PAGE INTENTIONALLY BLANK.

RESOLUTION NO. 404-06-98

A RESOLUTION adopting a policy for new satellite water systems and repealing and superseding Resolution 369-07-96.

WHEREAS the Board of Commissioners of King County Water District #111 ("District") desires to adopt a policy applicable to the design, ownership, and operation of satellite water systems existing within the District's water service boundaries as identified in the South King County Coordinated Water System Plan ("CWSP"); and the policies set forth herein are adopted in order that the District will comply with the CWSP and the directives of the Washington State Department of Health; and

WHEREAS following discussion, the Board has determined that the satellite system policy of the District should be established and implemented as set forth below; now therefore,

IT IS HEREBY RESOLVED as follows:

Effective immediately:

1. The Board adopts the policies set forth in the attached Exhibit "A", "Satellite Systems Policies", which are hereby incorporated herein as though fully set forth, as the District policies applicable to satellite systems.

2. All owners of satellite systems for which the District agrees to provide technical assistance and/or operation as described in Exhibit "A" shall be required to execute a Satellite

Systems Service Contract in the form attached as Exhibit "B" and by this reference incorporated herein as though fully set forth.

3. All owners of satellite systems for which the District agrees to assume ownership and operation as described in Exhibit "A" shall be required to execute a Satellite Systems Ownership Transfer Contract in the form attached as Exhibit "C" and by this reference incorporated herein as though fully set forth.

4. Owners of systems desiring to be considered as satellite systems of the District shall be provided with a letter in the form attached as Exhibit "D", which is, by this reference incorporated herein, setting forth the requirements, pursuant to the policies set forth in Exhibit "A", of the District for consideration of a satellite system for ownership and/or operation by the District.

5. Effective immediately, Resolution 369-07-96 is repealed.

PASSED BY THE BOARD OF COMMISSIONERS OF KING COUNTY WATER DISTRICT NO. 111, at its regular meeting held June 11, 1998.

BOARD OF COMMISSIONERS OF

KING COUNTY WATER DISTRICT NO. 111

By: _____
CHARLES E. WILSON, President

By: _____
GARY G. CLINE, Secretary

By: _____
G.L. DUTCH RANDALL, Commissioner

WATER DISTRICT #111

SATELLITE SYSTEMS POLICIES

1. DEFINATIONS - the terms used herein are defined as follows:

"Standard Specifications" means the District's conditions for water system construction including the District's Standard Specifications.

"Connection" means each user receiving water and all lots in a present or proposed subdivision.

"CWSP" means the South King County Regional Coordinated Water Supply Plan.

"Not permit Satellite Services" means by the District or anyone else.

"SSMA" means a qualified satellite service management agency.

"Satellite System" means a complete water source and distribution system which is independent of and unconnected to another public or private water system and has two or more connected water users.

"Satellite System Services" includes acquisition and ownership of the satellite system by the District, as well as maintenance, repairs, testing, billing and other services provided by the District or another SSMA to a satellite system.

"Service Area" means the District's service area in the South King County Regional Coordinated Water Supply Plan ("CWSP") established pursuant to RCW 70.116, the Public Water System Coordination Act.

2. POLICY - SATELLITE SYSTEMS WITHIN THE DISTRICT'S SERVICE AREA. It is the policy of King County Water District #111 ("District") to require that the District's water system be extended to provide water service to property within the District's service area.

In exceptional situations, the District will permit satellite systems within its service area. The District's decision to permit a satellite system will be based on the following factors:

(a) Whether the minimum distance requirements set forth below, apply.

(b) Whether the existence of a satellite system will discourage or interfere with normal growth of the District's system and/or work a hardship on other property owners that would be benefited by extending the District's system.

(c) Whether the satellite system complies with the all other requirements of the District and the CWSP.

EXHIBIT A

3. CONTRACTS FOR SATELLITE SYSTEMS

All satellite systems must enter into a contract with the District on District form, as a condition to receiving satellite system service from the District or any other SSMA.

Where appropriate, the contract must include, or be accompanied by, a Petition to Annex to the district and an agreement not to protest formation of future Utility Local Improvement District by the District.

4. TYPES OF SATELLITE SERVICE. If the District allows a satellite system within its service area, the District's services will consist of one or more of the following:

(a) Ownership and Operation. Ownership of the satellite system will be transferred to the District, and it will become a part of the district's system.

(b) Technical Assistance and/or Operation. The District will contract to provide technical and operational services to the satellite system. These may include routine and/or emergency repairs, system maintenance, water quality sampling, regulatory compliance, billing, and/or complete operation and management of the satellite systems.

5. SOURCE INTERRUPTION RESPONSIBILITY. Because a satellite system will receive water from a single well or aquifer, and may be so located that no emergency water service is reasonably available, the District will not under any circumstances undertake responsibility for emergency or supplemental supply in the event of diminution in, loss of, or contamination of the satellite system's water supply.

6. MINIMUM DISTANCE REQUIRMENTS. The District will not permit any satellite system, whether served by the District or any other SSMA, where the closest point of the property served is less than the following distances from the District's nearest distribution or transmission water mains:

(a) 2 units 1,300 feet
(b) 3 & 4 units 2,000 feet
(c) More than 4 units will require review by the Board and may require developer's extension agreement.

7. MINIMUM STANDARDS. Satellite systems must meet the District's Standard Specifications and all other requirements for satellite systems.

All facilities of the satellite system shall be designed by a civil engineer licensed in the State of Washington. The plans shall be submitted to the district for review and approval. The plans shall be approved by the Washington State Department of Health Regional Engineer and the King County Department of Health. The costs of the review shall be borne by the satellite system.

EXHIBIT A

The well shall be reviewed by a hydro-geologist whose primary practice is the design and analysis of domestic water wells. All well construction shall be supervised by the project hydro-geologist. The well shall be drilled by a license well driller whose main business is construction domestic wells. The well log shall be recorded with the Washington State Department of Ecology and a copy provided with the district.

The well shall be approved either by the King County Department of Health for wells with less than 5,000 gallons per day capacity or the Washington State Department of Ecology for wells greater than 5,000 gallons per day.

The well shall be capable of providing a sustained pumping rate of 8000 gallons per day per connection for a minimum of 30 consecutive days. The pumping test shall be administered by hydro-geologist whose primary practice is the design and analysis of domestic water wells.

The well shall be capable of providing a minimum of 10 gallons per minute per connection unless storage is provided. In the event that storage is provided, the well shall be capable of providing a minimum of 1 gallon per minute per connection.

All controls, dis-infection equipment and other equipment for the well and associated facilities shall be in an enclosed weather proof building with heat.

The well shall be provided with a gravel access driveway capable of supporting maintenance vehicles. Final size, configuration and location subject to the approval of the district.

The well shall be a minimum 6 inch diameter casing with surface seal and equipped with a 1.5 inch PVC sounding tube.

On-site water storage is not required but encourage.

Emergency power supply facilities are not required but encouraged. However, electrical connection for emergency power is required.

All pipe greater than 3 inch shall be Class 52 ductile iron pipe. All pipe less than 3 inch shall be Type K copper.

The pipe routes shall be subject to district review and approval. The pipe system shall include valves, blow off assemblies and other appurtenances in order to allow reasonable maintenance by the district.

All connections shall be metered.

The limits of the satellite system shall be from the source to the meter. Pipes between the meter and the connections shall be privately owned and maintained lines.

All pipes, wells, structures and associated facilities shall be located on private property with easements granted to the District on a form and of size and

EXHIBIT A

configuration acceptable to the District.

Approval of the satellite system shall not relieve the applicant of approvals by other agencies or other permits that may be required.

Record drawings indicated the final as constructed facilities shall be prepared and stamped by the design engineer. The original documents shall be submitted to the District. Two copies of the record drawings shall be stored at the system's control building.

In rare and exceptional situations the District may permit water mains smaller than required by the District's Standard Specifications. The District's determination of whether to grant such an exception will be on a case by case basis.

Where anyone other than the District is to be the SSMA, the satellite system must meet the CWSP minimum design standards.

8. WELL ADEQUACY. The existing source(s) of water for the satellite systems must:

(a) Be approved and permitted by the Department of Ecology;

(b) Meet all Department of Social & Health Services, King County Department of Health and other purity requirements for public water systems.

9. STREET GRADES/EASEMENTS. If the streets or roads in which the satellite system mains are located have not been accepted by King County or City of Kent for future maintenance, the depth and locations of the satellite systems must meet the approval of the District's engineer.

10. SERVICE OUTSIDE DISTRICT SERVICE AREA. The District will not provide satellite system services to any satellite system located outside the District service area.

11. NO PROTEST AGREEMENT. The District will not provide satellite system services unless all property owners served by the satellite system agree in writing to not protest the future formation of a Utility Local Improvement District to extend the District's system to service the satellite system area.

12. EXISTING SATELLITE SYSTEMS - REQUIRED IMPROVEMENTS.

(a) Inspection by the District. Before accepting a system for satellite services or ownership, the District will inspect the satellite system to determine what improvements must be made prior to the District permitting any satellite system service, and what improvements must be made in the future to meet the District's Standard Specifications.

EXHIBIT A

The applicant must deposit with the District the estimated cost of said inspection and agree to pay any additional costs beyond the initial deposit.

The applicant must, at the applicant's expense, expose for inspection such components of the satellite system as the District requires. The foregoing includes, but is not limited to, the well pump and water distribution lines.

(b) Required Improvements. Following inspection, the District will, in its sole discretion, determine:

1. What repairs or improvements must be performed by the applicant prior to the District providing satellite system services.

2. What improvements will be necessary in the future to bring the system to the District's Standard Specifications;

3. An estimate of the cost of items (1) and (2).

4. A method of payment for items (1) and (2).

(c). Initial Repairs and Improvements. Before the District will permit satellite system services to a satellite system, the applicant must, at the applicant's expense, make such repairs and improvements as the District determines are necessary to meet District Standard Specifications.

13. WATER METERS. All connections thereto must be metered in accordance with District standards.

14. CAPITAL FACILITIES CHARGE and METER INSTALLATION. As a condition to the District permitting any satellite system services, the users thereof must pay the District's capital facilities charge per unit, including the meter installation charges, if required, in advance of the District providing satellite system services.

15. RATES AND CHARGES. The District will charge its standard labor, material and equipment rates for satellite system services, in satellite systems not owned by the District.

The rates and charges to customers where the District is providing satellite systems services shall be determined, from time to time, by the District based on the cost of service and other factors which, by statute, the District is entitled to consider in fixing water rates. In no event, however, shall the rates charged such users be less than those charged the same category of customers connected to the District's water system.

EXHIBIT A

WATER DISTRICT #111

SATELLITE SYSTEM SERVICE CONTRACT

IT IS AGREED by and between Water District #111 (the "District") and the undersigned (the
"Owners") as follows:

1. **Parties**. The District is a municipal corporation organized under and existing by virtue of Chapter 57 of the Revised Code of Washington. The Owners are, collectively, the owners and persons provided water service by a water source and distribution system which is independent of and unconnected to any other public or private water system (the "satellite system").

2. **Legal Description**. The property presently served, and to be served in the future, by the satellite system is located in King County, Washington and is legally described: [ ] as attached [ ]as follows:

The above property is [ ] inside [ ] outside the District's service area under the South King County Coordinated Water Supply Plan.

3. **District Services**. The District will provide the following checked services to the satellite system. The items not checked shall be the responsibility of the owners.

[ ] Operation and management of the satellite system, including all services described below.

[ ] Routine inspection, maintenance and repair of the satellite system in accordance with reasonable and accepted standards and practices for public water systems.

[ ] Emergency repairs, within a reasonable time after the District has been notified that repairs are needed.

[ ] Preparation and filing of reports and other data (including water sample testing) required by governmental bodies having jurisdiction.

If the above is not checked, the owners will send copies of all such reports and data, including water quality test reports, to the District within 30 days of preparation thereof.

EXHIBIT B

[ ] Other: _____

_____

_____

_____

_____

[ ] The District will not provide any satellite system services. [If this box is checked, only Sections 5, 6, 7, 9, 10,11 and 12 of this Contract apply.

4. **District Charges**. The owners agree to pay the following to the District.

(a) Meter Installation Charges. The District will charge for the above services on a time, materials and administrative overhead basis according to usual District policy.

(b) Capital Facilities Charge. All persons connecting to the District's satellite water system are obligated to pay the District's Capital Facilities Charge when requesting service.

(c) Administrative Fee. The owners have paid $300 to the District for the District's initial administrative and record keeping set-up charges.

5. **Terms and Conditions**. This agreement includes all of the terms and conditions set forth in the District's standard specifications.

It is understood by the parties:

(a) The District does not own the satellite system. The District's responsibility is limited to the services set forth above, performed in accordance with accepted public utility practices.

(b) The District has no responsibility in the event that the satellite system water source is interrupted, the volume thereof is reduced, or the water is contaminated.

(c) If any of the services set forth in Paragraph 3 performed by the owners must be in accordance with accepted public utility practices and in accordance with all applicable laws and regulations.

(d) The owners hereby grant the District an irrevocable license to enter onto the well site(s) and their properties to perform the District's responsibilities under this Agreement, and to inspect the water system even though this Agreement does not provide that the District will provide any services to the satellite system.

EXHIBIT B

6. **Waiver of Right to Protest Formation of a U.L.I.D**. The owners waive any and all rights to protest the formation by the District of a Utility Local Improvement District to finance the construction of water to provide District water to the owners. Owners reserve the right to contest the amount of the owners' assessment, in the manner provided by statute.

7. **Future Connection to District System**. At such time as the District's water system is extended to provide District water in lieu of the present satellite system source, the owners must connect to the District's system, at their expense, pursuant to the terms and conditions of the District standard specifications.

8. **Integration**. This Agreement constitutes the entire agreement between the parties. There are no other verbal or written agreements or representations which modify or affect this Agreement.

9. **Covenant Running With the Property**. It is agreed that this Contract creates a covenant running with the property described above and any other properties receiving water in the future from the satellite system, and shall be binding on the owners of all such property, their heirs and successors.

DATED this _____ day of _____ 19__

WATER DISTRICT #111

By:_____

Title:_____

OWNERS [The owners of the satellite system, and of all property served by it, must sign.]

Name	Signature	Mailing Address

EXHIBIT B

STATE OF WASHINGTON)
)SS.
COUNTY OF KING)

I hereby certify that I know or have satisfactory evidence that _____ is/are the person___ who appeared before me and said person___ acknowledged that _____ signed this instrument and acknowledged it to be _____ free and voluntary act for the uses and purposes mentioned in this instrument.

DATED:_____ 19__

Notary Public in and for the State of Washington residing at:

_____

My commission expires:

_____

STATE OF WASHINGTON)
)SS.
COUNTY OF KING)

I hereby certify that I know or have satisfactory evidence that _____ is/are the person___ who appeared before me and said person___ acknowledged that _____ signed this instrument and acknowledged it to be _____ free and voluntary act for the uses and purposes mentioned in this instrument.

DATED:_____ 19__

Notary Public in and for the State of Washington residing at:

_____

My commission expires:

_____

EXHIBIT B

STATE OF WASHINGTON)
)SS.
COUNTY OF KING)

I hereby certify that I know or have satisfactory evidence that _____ is/are the person___ who appeared before me and said person___ acknowledged that _____ signed this instrument and acknowledged it to be _____ free and voluntary act for the uses and purposes mentioned in this instrument.

DATED:_____ 19___

Notary Public in and for the State of Washington residing at:

_____

My commission expires:

_____

EXHIBIT B

WATER DISTRICT #111

SATELLITE SYSTEM OWNERSHIP TRANSFER CONTRACT

IT IS AGREED by and between Water District #111 (the "District") and the undersigned (the "Owner") as follows:

1. Parties. The District is a municipal corporation organized under and existing by virtue of Chapter 57 of the Revised Code of Washington. The Owners are, collectively, the owners and persons provided water service by a water source and distribution system which is independent of and unconnected to another public or private water system (the "satellite system").

2. **Legal Description**. The property presently served, and to be served in the future, by the satellite system is located in King County, Washington and is legally described: [ ] as attached [ ] as follows:

The above property is [ ] inside [ ] outside the District's service area under the South King County Coordinated Water Supply Plan.

3. **Transfer of Ownership**. Upon receipt from the owner of the following, and following review and approval thereof by the District, the District agrees to accept the ownership of the satellite system, and to operate and maintain it in the future as a part of the District's water system:

a) The Washington State Department of Ecology permit for the satellite system well(s).

b) All well driller's record for satellite system well(s).

c) Test reports from a certified testing laboratory, of water samples taken by the District, of the satellite system water at the well(s) and other District selected points in the satellite system, establishing that the water in the

d) Satellite system meets all State and Federal bacterial and other contaminant levels for public water supply.

e) A bill of sale transferring all assets of the satellite system to the District, on the District's standard form.

f) All necessary easement(s) for future operation and maintenance of the satellite system, on the District's standard form.

EXHIBIT C

g) An engineering inspection report describing the condition of the system prepared by a professional engineer approved by the District, at the owner's expense.

h) Proof of completion, at the owner's expense, of all repairs and improvements required in the engineer's report and necessary for the satellite system to meet the District's Standard Specifications.

i) Agreement(s), by all owners of real property served by the satellite system, to not protest formation by the District of a Utility Local Improvement District for the purpose of constructing water mains extending the District's system to provide District water to the property served by the satellite system. The foregoing does not waive the owners' right to object to the amount of the owner's assessment, in the manner provided by statue.

j) Payment of all of the District's Capital Facilities Charge for the satellite system customers. All customers connecting to the satellite system in the future must, as a condition thereto, pay the District's then standard Capital Facilities Charge

k) Payment of all of the District's $300 Administrative Charge.

4. **Effective Date**. Transfer of ownership of the satellite system to the District shall be effective upon adoption by the District's Board of Water Commissioners of a resolution accepting the system, following the District's receipt and approval of the items above.

5. **Terms and Conditions**. This Agreement includes all of the terms and conditions set forth in the District's standard specifications.

6. **Water Rates**:

Water Rates. The District's current water rates established by resolution will be applied.

7. **Other Agreements**. In addition to the above, it is agreed as follows:

_____

_____

_____

_____

_____

_____

EXHIBIT C

8. **Integration**. This document constitutes the entire agreement between the parties. There are no other verbal or written agreements or representations which modify or affect this Agreement.

DATED this _____day of_____ 19___

WATER DISTRICT #111

By:_____

Title:_____

OWNERS [The owners of the satellite system, and of all property served by it, must sign.]

Name (printed)	Signature	Mailing Address

EXHIBIT C

STATE OF WASHINGTON)
)SS.
COUNTY OF KING)

I hereby certify that I know or have satisfactory evidence that _____ is/are the person___ who appeared before me and said person___ acknowledged that _____ signed this instrument and acknowledged it to be _____ free and voluntary act for the uses and purposes mentioned in this instrument.

DATED:_____ 19___

Notary Public in and for the State of Washington residing at:

_____

My commission expires:

_____

STATE OF WASHINGTON)
)SS.
COUNTY OF KING)

I hereby certify that I know or have satisfactory evidence that _____ is/are the person___ who appeared before me and said person___ acknowledged that _____ signed this instrument and acknowledged it to be _____ free and voluntary act for the uses and purposes mentioned in this instrument.

DATED:_____ 19___

Notary Public in and for the State of Washington residing at:

_____

My commission expires:

_____

EXHIBIT C

STATE OF WASHINGTON)
)SS.
COUNTY OF KING)

I hereby certify that I know or have satisfactory evidence that _____ is/are the person___ who appeared before me and said person___ acknowledged that _____ signed this instrument and acknowledged it to be _____ free and voluntary act for the uses and purposes mentioned in this instrument.

DATED:_____ 19__

Notary Public in and for the State of Washington residing at:

_____

My commission expires:

_____

STATE OF WASHINGTON)
)SS.
COUNTY OF KING)

I hereby certify that I know or have satisfactory evidence that _____ is/are the person___ who appeared before me and said person___ acknowledged that _____ signed this instrument and acknowledged it to be _____ free and voluntary act for the uses and purposes mentioned in this instrument.

DATED:_____ 19__

Notary Public in and for the State of Washington residing at:

_____

My commission expires:

_____

EXHIBIT C

date

name
address
city

RE: Satellite Management No. _____

Dear _____,

Pursuant to our conversation, the following is an overview of the District's Satellite Management Policy.

Water District #111 has a designated "service area," which is defined in the approved South King County Coordinated Water System Plan, established pursuant to RCW 70.116 (The Public Water System Coordination Act). Water District #111 is committed to providing service to all properties within that service boundary either by "direct service" (i.e.; water main extension) or by "Satellite Management" of a private well system. Your property is within the District's service area.

If a satellite system is allowed to exist within the District, the District will either (a) assume full operation and ownership of the system, or, (b) provide contract services to the satellite system.

A satellite system is defined as a water source and distribution system that is independent of any other public or private water system, and which has two or more connected water users or is a non-residential use. Only in exceptional situations will the District allow a satellite system within its service area. Whether the District will permit a satellite system to exist within the service area is determined after the following factors:

a) Whether connecting to the District system will work an unreasonable economic hardship on those desiring water service.

b) Whether or not the minimum distance requirements of District's standard specifications apply.

c) Whether the proposed satellite system will interfere with normal growth of the District's system and/or work a hardship on other property owners, who would be benefited by extension of the

EXHIBIT D

District's system.

d) Whether the proposed satellite system is compatible with the District's Comprehensive Water Supply Plan, including all construction standards.

e) Whether the satellite system complies with all other requirements of the District's standard specifications and the South King County Coordinated Water Supply Plan.

The following documents must be submitted for review and approval by the District, along with an administrative fee in the amount of $300.00 in order to consider your request to function as a satellite water system.

1. A copy of the "Application for Public Water System Plan Review" (King County Health furnishes this form)

2. Proof of legal ownership of the properties to be served by the proposed system.

3. A copy of the Water Right Purveying Permit from the Washington State Department of Ecology.

4. Well log - for existing wells for which satellite management has been requested.

5. Design and specifications for pumping and developing of the well.

6. Site plan showing the location of the well(s), any existing buildings, the protective radius, etc.

7. Copy of the completed well use agreement (must reference the Satellite System Management Agreement and Water District #111. King County Health furnishes this form.)

8. Easement for water pipeline

9. Documentation from the Seattle-King County Environmental Health Department that proposed system meets their requirements.

10. Bills of Sale as necessary

Enclosed you will find the following information:

1. Water District #111 Standard Specifications

EXHIBIT D

2. Satellite System Service Contract
3. Sample - Easement for Water Main Construction
4. Sample - Bill of Sale

If you have any questions, please call me at 253-631-3770.

Sincerely,

Larry Bradbury
General Manager

EXHIBIT D

Appendix P

WUE

THIS PAGE INTENTIONALLY BLANK.

Washington State Department of Health
Division of Environmental Health
Office of Drinking Water

Date Submitted: 6/7/2022

Water Use Efficiency
Annual Performance Report - 2021

WS Name: Lake Meridian Water District

Water System ID# : 41900 WS County: KING

Report submitted by: *Brent Lewis*

Meter Installation Information:

Estimate the percentage of metered connections: *100%*

If not 100% metered – Did you submit a meter installation plan to DOH? No

Within your meter installation plan, what date did you commit to completing meter installation?

Current status of meter installation:

Production, Authorized Consumption, and Distribution System Leakage Information:

12-Month WUE Reporting Period *01/01/2021* To *12/31/2021*

Incomplete or missing data for the year? *No*

If yes, explain:

Total Water Produced & Purchased (TP) – Annual volume gallons	*538,331,642* gallons	
Authorized Consumption (AC) – Annual Volume in gallons	*521,549,732* gallons	
Distribution System Leakage – Annual Volume TP – AC	*16,781,910* gallons	
Distribution System Leakage – DSL = [(TP – AC) / TP] x 100 %	*3.1 %*	
3-year annual average - %	*4.1 %*	*2019, 2020, 2021*

Goal-Setting Information:

Enter the date of most recent public forum to establish WUE goal: *06/22/2017*

Has goal been changed since last performance report? *No*

Note: Customer goal must be re-established every 6 years through a public process.

Customer WUE Goal (Demand Side):

The District will continue public awareness and conservation measures with our customers.

Customer (Demand Side) Goal Progress:

The District has exceeded its goal of a one percent per year reduction per ERU since 2008. In 2021 the District has again seen low consumption per ERU therefore, the District will maintain its conservation measures along with public education in order to meet our goal of 180 gallons per ERU over the next year. We understand there are many factors that impact these results; economics, weather, as well as conservation measures. While the current consumption is low, we know from historical consumption numbers that they will fluctuate and likely increase at some point in time. The District will be submitting a new Comprehensive Water Plan in the near future which will outline the new water use efficiency goals within.

Additional Information Regarding Supply and Demand Side WUE Efforts

The District encourages and periodically provides conservation items to single-family homes and the owners and managers of multi-family buildings. Conservation items available free of charge include toilet leak detection tablets and gauges used to track rainfall and determine how much system water must be used on lawns and landscapes. The District supports new codes by local jurisdiction for all new construction to install low-flow devices before connection to the system. The District provides informational handouts of watering practices and the use of native vegetation, drought tolerant and low water use landscaping. The District has rain gauges available to its customers to track rainfall used to determine how much water must be applied to lawns and landscapes. The District maintains a conservation-oriented pricing structure with increasing block rates to provide an economic conservation incentive to its customers. The District provides a washer rebate of $50 for approved machines.

Describe Progress in Reaching Goals:

- Estimate how much water you saved.
- Report progress toward meeting goals within your established timeframe.
- Identify any WUE measures you are currently implementing.
- If you established a goal to maintain a historic level (such as maintaining daily consumption at 65 gallons per person per day for the next two years) you must explain why you are unable to reduce water use below that level.

The following questions will help DOH better understand water usage, water resources management and drought response. The data will be used to provide technical assistance, not for regulatory purposes.

All questions are voluntary

Month	Date of Measurement	Static Water Level (feet below measuring point)	Dynamic Water Level (feet below measuring point)
January	01/05/2021		277.0
February	02/05/2021	247.0	
March	03/05/2021		281.0
April	04/05/2021		284.0
May	05/05/2021		262.0
June	06/05/2021		272.0
July	07/05/2021		311.0
August	08/05/2021		303.0
September	09/05/2021		254.0
October	10/05/2021		264.0
November	11/05/2021		256.0
December	12/05/2021	249.0	

Water level data:

Please provide the following information (if known) to help us better utilize the water level data.

Well tag Id number:	AFJ 248
Well depth:	443.0
Water level accuracy (within 0.01 ft < 1 ft ~ 1 ft)	0.01-0.03
Completion type (e.g., cased open interval, cased open-ended, cased open-ended with perforations, etc…)	cased, stainless steel 100 slot screened from 393.5' to 414' with bail bottom
Location coordinates (latitude, longitude) and accuracy of the coordinates (< 1ft, ~1ft, >1000ft)	47.355468, -122.139570
Water level parameter name (e.g. depth below measuring point, depth below top of casing, depth below ground surface)	depth below measuring point
Elevation of top of casing OR elevation of measuring point if different than top of casing (as specified in question 7)	350'

Monthly/Seasonal Water Usage:

What was your maximum daily water demand for the previous year (in gallons per day)? 4,150,500

Month	Volume of Water Produced in gallons
January	5,852,539
February	7,473,633
March	8,964,844
April	10,990,234
May	14,089,844
June	15,314,453
July	17,258,789
August	13,683,594
September	7,711,914
October	10,847,656
November	8,148,438
December	7,009,766

Water shortage response:

Did you activate any level of water shortage response plan the previous year?

- ☐ Yes
- ☑ No
- ☐ There was no need to

If you activated a water shortage response plan the previous year, what level did you activate? (Check all that apply)

- ☐ Advisory Conservation
- ☐ Voluntary Conservation
- ☐ Mandatory Conservation
- ☐ Rationing
- ☐ Other

What factors caused your water shortage the previous year?

- ☐ Drought
- ☐ Fire
- ☐ Landslides
- ☐ Earthquakes
- ☐ Flooding
- ☐ Water Supply Limitations
- ☐ Other

Do not mail, fax, or email this report to DOH

LAKE MERIDIAN WATER DISTRICT
KING COUNTY, WASHINGTON

RESOLUTION NO. 679-03-23

A RESOLUTION OF THE BOARD OF COMMISIONERS OF LAKE MERIDIAN WATER DISTRICT OF KING COUNTY, WASHINGTON, READOPTING WATER USE EFFICIENCY GOALS.

WHEREAS, in 2003 the Washington State Legislature enacted Engrossed Second Substitute House Bill 1338, known as the Municipal Water Law, to address the increasing demand on the State's water resources; and the Municipal Water Law established that all municipal water suppliers must use water more efficiently and required the Washington State Department of Health (DOH) to adopt a water use efficiency program to promote and require the efficient use of the State's water resources; and

WHEREAS, DOH adopted a Water Use Efficiency Rule (WUER) codified as WAC 246-290-800 et. seq. which was effective January 22, 2007, and WAC 246-290-830 requires the elected governing board of a municipal water supplier to establish water use efficiency goals to enhance the efficient use of water by the water system and its consumers; and

WHEREAS, the Lake Meridian Water District Board of Commissioners is currently updating the District's Comprehensive Water System Plan (WSP), and District staff and the District's consulting engineers, BHC Consultants (Consulting Engineer) have prepared a draft 2023 Comprehensive Water Comprehensive Plan (Draft WSP); and

WHEREAS, Chapter 5 of the Draft WSP, a copy of which is attached hereto as **Exhibit A** and incorporated herein by this reference, describes the District's water use efficiency program, conservation goals, and the programs necessary to attain those goals; and

WHEREAS, the WUER requires municipal water suppliers to establish water conservation goals in a public forum that provides the opportunity for consumers and the public to participate and comment on the water use efficiency goals, and the District Board of Commissioners, pursuant to a public notification on the District's website held a public hearing on March 9, 2023, at the District office commencing at 10:00 a.m. on the proposed adoption of updated water use efficiency goals; and having received and considered at the meeting staff and consultant reports and recommendations, and public input as was presented regarding the adoption of water use efficiency goals; now, therefore,

BE IT RESOLVED by the Board of Commissioners of Lake Meridian Water District of King County, Washington, as follows:

1. The District's proposed water use efficiency goals as set forth in **Exhibit A** attached hereto are hereby approved and established.

2. District staff are hereby authorized and directed to carry out the District's water use efficiency programs to achieve the District's water use efficiency goals.

3. This resolution and the policies set forth herein shall be effective the date set forth below and shall modify and amend all District resolutions, policies, and procedures to be consistent with the policies set forth herein.

ADOPTED by the Board of Commissioners of Lake Meridian Water District, King County, Washington, at a regular open public meeting thereof held on the 9th day of March, 2023.

Board of Commissioners
Lake Meridian Water District

Patrick M. Hanis, President

Charles E. Wilson, Secretary

Gary G. Cline, Commissioner

Chapter 5 Water Use Efficiency

5.1 History

The Lake Meridian Water District (District), along with other water purveyors and cities in the Puget Sound region, continues to experience population growth that will eventually demand more water than will be available from current regional supply sources.

In 1985, South King County, in which the District is located, was declared a Critical Water Supply Service Area (CWSSA). The South King County Regional Water Association (SKCRWA) was formed in 1989, to develop a Coordinated Water System Plan (CWSP) to ensure that member agencies would have sufficient water supply to meet the needs of the fast-growing area between Seattle and Tacoma. The CWSP included a water conservation element outlining regional and local conservation objectives, including a target reduction of 6.5% by the year 2000 for purveyors of utilities serving 500 or more customers, such as the District. No target reductions were established by the SKCRWA beyond 2000.

The District began its conservation program in 1997 and has produced quantifiable water savings through operations and maintenance, plumbing retrofit programs, water rates, metering approaches, and information programs to educate customers about conservation. In 1997, the District developed a conservation program with the goal of 0.5% per year reduction to the year 2000, and 1% per year thereafter. The resulting projected water use at 20 years (2017) was 212 gallons per day (gpd)/equivalent residential unit (ERU).

The District has maintained its existing program and added elements it deemed necessary and appropriate to meet its commitment to conserving water with excellent results. From 1997 to 2000, the District reduced demand from 255 gpd/ERU to 240 gpd/ERU, a total reduction of 5.9%. While the CWSP target reduction was 6.5% over 11 years (1989 – 2000), the District nearly exceeded it in just three years (1997 – 2000). From 1997 to 2004, the District reduced demand from 255 gpd/ERU to 205 gpd/ERU, a reduction of over 3% per year. From 2004 to 2014 a further reduction of around 28 gpd/ERU, from 205 gpd/ERU to 177 gpd/ERU was achieved. This represented an average reduction of approximately 1.45% per year. These reductions clearly exceed the District's phased targets of 0.5% and 1%.

Having already met and exceeded their conservation goals, the District set a new goal in 2017 to maintain a 3-year average water use at or below 180 gallons per ERU. This goal was met between 2017 and 2019 as water demand never exceeded 180 gallons per ERU. A graphical comparison of the 1997 projection and the historical water savings is shown in Figure 5-1.

In addition to the development of the CWSP, SKCRWA's initial efforts focused on evaluating water supply opportunities that would provide the reliability and water quality needed to meet future needs. Early on, interties with the larger systems operated by Seattle and Tacoma looked attractive. The potential to further develop the Green River for additional municipal water supply became the early focus of the SKCRWA. Acting on behalf of several of its members, the SKCRWA entered into a contract to participate in the development of the Second Supply Project of Tacoma. Later the SKCRWA supported members developing a Joint Operating Agreement (JOA) for cooperative water supply development. The JOA has been used by members as a basis to craft specific water supply agreements. SKCRWA also provided coordination and leadership to develop the South King County Groundwater Management Plan, and more recently, the

SKCRWA has focused on representing members at regional and state water forums and with state agencies.

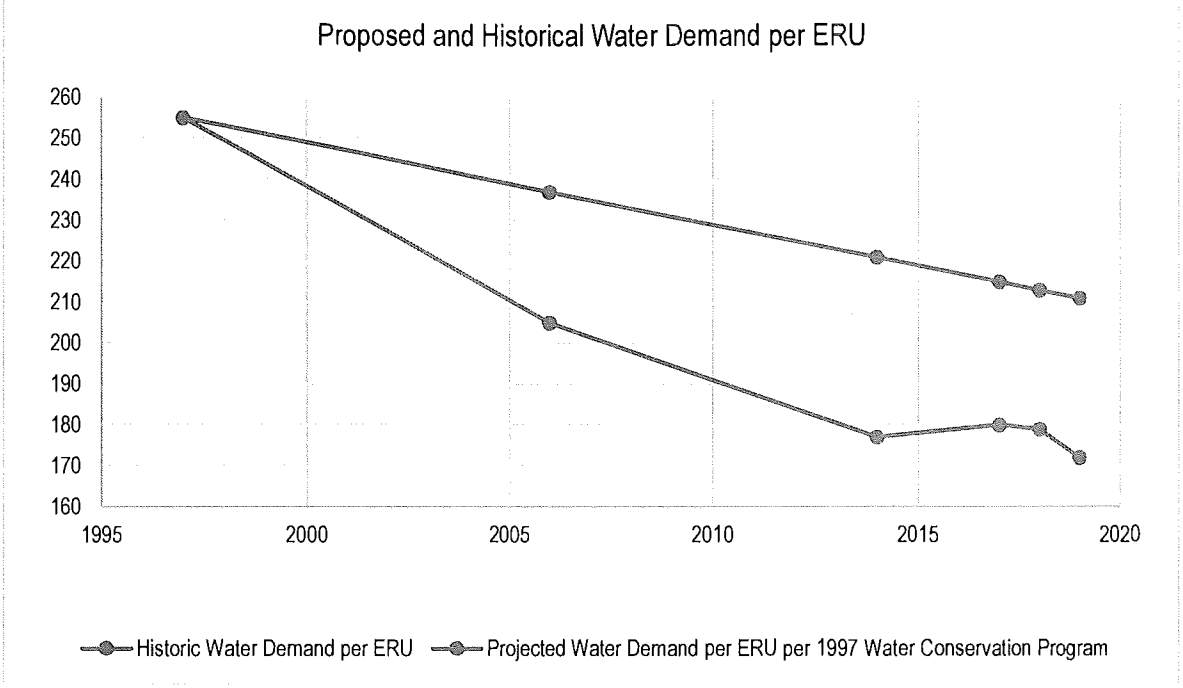

Figure 5-1 Proposed and Historical Water Demand per ERU

5.2 Regulatory Requirements

The Washington Water Utilities Council, Washington State Department of Health (DOH), and Department of Ecology (DOE) jointly developed Conservation Planning Requirements (CPR) Guidelines and Requirements for Public Water Systems Regarding Water Use Reporting, Demand Forecasting Methodologies, and Conservation Programs. Interim guidelines were first established in 1990, and subsequently finalized and approved in 1994. The DOH published the CPR in 1994.

The CPR includes guidelines for public water systems in preparing and implementing conservation plans and programs to monitor water use. The CPR suggests that a water agency's conservation plan include the following three components:

1. Water use data collection
2. Demand forecasting
3. Conservation program development

DOH approval of an agency's conservation plan is based upon review of all three components of the conservation plan. The only substantial difference between the CPR and the CWSP is the quantitative target.

Additionally, Chapter 5 of the Municipal Water Supply – Efficiency Requirements Act, amended and clarified sections of the State Board of Health Code, RCW 43.20; the laws governing Public Water Systems RCW 70.119A; and sections of the State Water Code, RCW 90.03 were amended in 2003 and revised in

2012. In 2004, DOH published *Municipal Water Law: Interim Planning Guidance for Water System Plan/Small Water System Management Program Approvals* that includes conservation requirements for systems with 1,000 or more connections to facilitate compliance with these regulatory requirements.

5.3 Historical Water Conservation Program

As noted earlier, the District first developed a Water Conservation Program in 1997 as part of its Water Comprehensive Plan. In accordance with the WAC 246-290-810(4)(d)(i), which requires a minimum of 6 measures for a system with connections between 2,500 and 9,999, there were 11 measures within four categories that the District implemented. In some categories, the District implemented other program elements which were not required. The District has complied with the CPR for its historical program and is shown in the CPR format in Table 5-1. The historical measures are identified as *conservation*, while the proposed program will be identified as *water use efficiency (WUE)*.

Table 5-1
Summary of Historical Water Use Efficiency Program

	Required By CPR
PUBLIC EDUCATION	
Program Promotion	√
The District, as required, provides an annual Consumer Confidence Report (CCR) which outlines the water source, contaminant levels, violation of contaminates, etc. Conservation information is generally included as part of the CCR.	
The District, as required, completes a Lead and Copper Report that provides a summary of levels in the water. Conservation information is generally included in this Report as well.	
The District makes available literature on water conservation practices, efficiency standards for plumbing fixtures, and water conserving landscaping.	
The District participates in the Puget Sound Water Conservation Coalition, which provides local newspapers with information for news articles or feature pieces on water supply and conservation, as necessary.	
TECHNICAL ASSISTANCE	
Purveyor Assistance	√
Not applicable.	
Customer Service	√
The District routinely monitors water usage for all residential and commercial accounts. If a significant deviation from past usage is noticed, the customer is notified immediately.	
The District provides assistance to prospective new customers regarding water conservation practices by having brochures and materials available at its office.	
The District offers assessments and audits of local school facilities.	
Bill Showing Consumption History	√
Customers' water bills include water use over the same period from the prior year as well as the classification average water use.	

Table 5-1
Summary of Historical Water Use Efficiency Program

	Required By CPR
SYSTEM MEASURES	
Source Meters	√
The District is metered at all source connections. These meters assist in system management and water accounting. Meters are maintained and tested on a regular basis.	
Service Meters	√
The District requires all water to be metered at the point of use.	
The District has a water meter replacement program, which allows the District to replace meters on a 20-year cycle.	
The District requires any person who desires to use District water from an unmetered source to rent a meter and pay the District for water used.	
Unaccounted Water/Leak Detection	√
The District requires developers and contractors to use a hydrant meter during the construction of projects.	
When anomalies appear on customer's water bills the District investigates for the source of the problem.	
The District cleans and scours all watermains on a five-year cycle as part of a flushing program. The water is accounted for by the use of a flow meter.	
INCENTIVES/OTHER MEASURES	
Single-Family/Multifamily Kits	√
The District encourages and periodically provides water conservation items to single-family homes and the owners and managers of multifamily buildings. Conservation items available free of charge include toilet leak detection tablets.	
The District supports new codes required by local jurisdictions for all new construction to install low-flow devices before connection to the system.	
Nurseries/Agriculture	√
The District provides informational pieces on watering practices and the use of native vegetation.	
Landscape Management/Playfields	√
The District supports, encourages, and provides resources on the use of native vegetation, drought tolerant and low water use landscaping.	
The District has rain gauges available for its customers to track rainfall. The gauges can also be used to track how much water was applied to lawns and landscape.	
Conservation Pricing	√
The District maintains a conservation-oriented pricing structure with increasing block rates to provide an economic conservation incentive to its customers.	

Table 5-1
Summary of Historical Water Use Efficiency Program

	Required By CPR
Utility Financed Retrofit	
The District provides a washer rebate for $50 for approved machines.	
The District contributed $300 to the Kent School District for retrofitting water fixtures in June 2005 at the Martin Sortun Elementary School	

5.3.1 Historical Water Savings

The 1997 Comprehensive Plan established a water demand per ERU value of 300 gallons per account. Less the unaccounted-for water, the water demand per ERU value is calculated to be 255 gallons per account in 1997. Taking the District's 1997 phased conservation goals of 0.5% to the year 2000 and 1% thereafter, the proposed goal for 2019 was 211 gallons per ERU. The actual 2019 ERU was 172 gallons per ERU which is approximately 22% less than the 1997 goal. Savings realized as a result of the District's 1997 Water Conservation Program are illustrated in Figure 5-1.

The District's distribution system leakage (DSL) has remained below the District's policy of a DSL of 10% or less. The average percent of DSL for the past three years has been 6.0%, however this average includes an outlier of 2% DSL in 2018. Taking the average of only 2017 and 2019 returns a value of 8.2%. The District desires to use conservative water demand projections and therefore will continue to use 10% DSL as a planning value. Additional information can be found in Table 2-5 of Chapter 2.

The actual water usage by customer class from 1999 to 2019 usage is shown below in Table 5-2. The data reflects end-of-year values. It can be noted from this table that the average daily usage was decreased significantly in single-family residential and multifamily residential with the most significant reduction in the single-family customer class, decreasing 25.8% since 1999. The fire protection class was not evaluated, as this annual volume is dependent on emergency use. The commercial/other class usage has decreased 9.4% since 1999. Table 2-7 of Chapter 2 displays actual water usage by customer class for each year from 2017 to 2019.

Table 5-2
Actual Average Day Demand by Customer Class

		1999	2019	% Conservation
Single-Family Residential	Gal per Account	230	171	25.8%
Multifamily Residential	Gal per Account	2,097	1,883	10.2%
Fire Protection	Gal per Account	15	2	N/A
Commercial/Other	Gal per Account	979	887	9.4%
Distribution System Leakage	% Total Consumption	1.0%	7.8%	-6.8%

5.3.2 Seasonal Water Usage

Water usage can vary significantly depending on the season. Figure 5-2 shows the billed usage of each customer class. The District bills on a two-month cycle so the figure shows the average for two months. The graph shows that during the summer months Single-Family Residential accounts and Irrigation accounts use significantly more water while Multifamily Residential and Commercial accounts are fairly steady throughout the year. These patterns can be attributed to the watering of lawns and irrigation of crops during the dryer summer months. Multifamily Residential and Commercial buildings generally do not require a large amount of irrigation and thus show a steady use of water throughout the year.

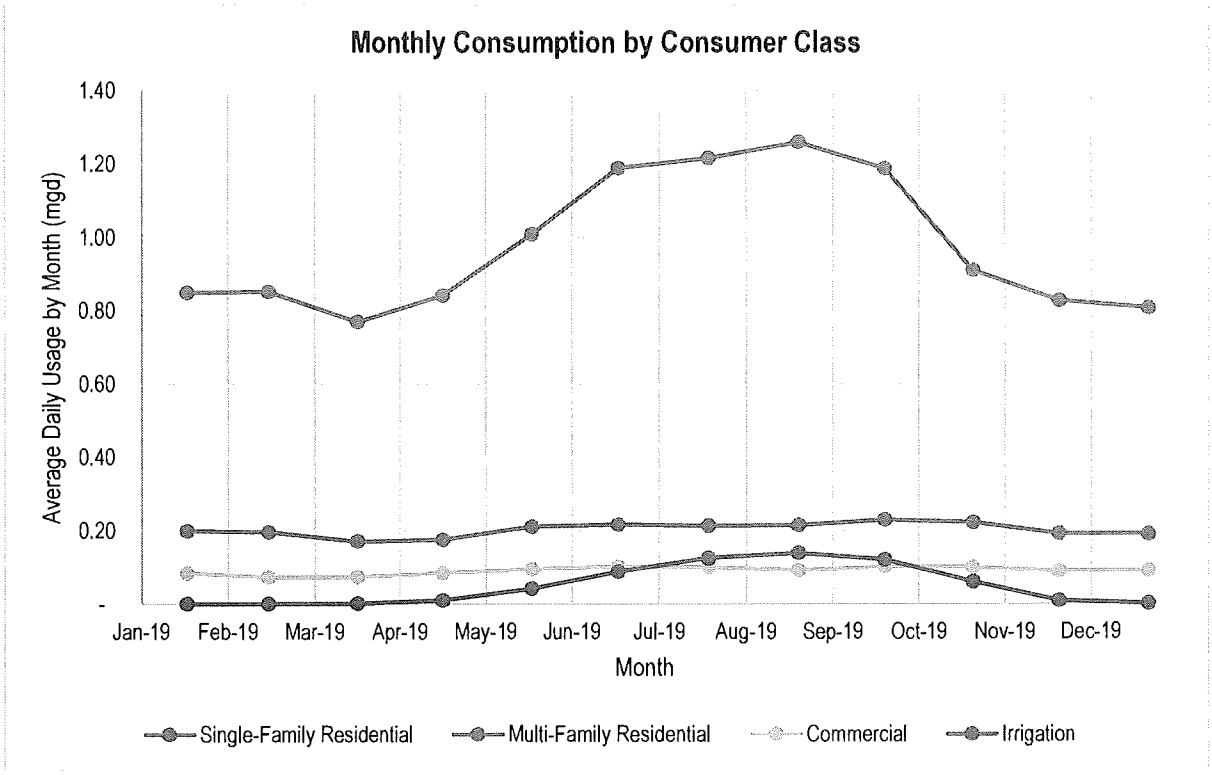

Figure 5-2 Monthly Consumption by Consumer Class

5.3.3 Evaluation of Water Use Efficiency Measures

As part of a water system plan, the District is required to evaluate water use efficiency measures. The evaluation focuses on customer demand efficiencies. Measures must be evaluated for cost-effectiveness from the following categories according to WAC 246-290-810(4)(d):

- Indoor residential
- Outdoor
- Industrial/commercial/institutional

For water systems with 1,000 or more connections there are three evaluation criteria when determining if a WUE measure is cost effective. They include:

- Water System's Perspective: Determine if the measures are cost-effective. This can be represented by whether the revenue meets the expenditure demands.

- Cost-Sharing Perspective: Evaluate cost-effectiveness if the costs were shared with other entities, such as neighboring water systems and water conservation partners.
- Societal Perspective: Evaluate if it would be cost-effective if all costs and benefits were included, including environmental, recreational, or aesthetic benefits.

5.4 2023-2029 Water Use Efficiency Program

The District's 2023-2029 Water Use Efficiency Program will remain the same but will be organized differently according to the implementation evaluation categories which include indoor residential, outdoor, and industrial/commercial/institutional. This program will assist in achieving the District's water conservation goal. No existing program measures have been recommended to be discontinued.

On a yearly average, indoor residential water usage accounts for the majority of water usage (69%) in the District in 2019. Figure 5-3 shows a breakdown of water usage for each of the WUE evaluation categories. The following sections provide a breakdown of programs that target each category.

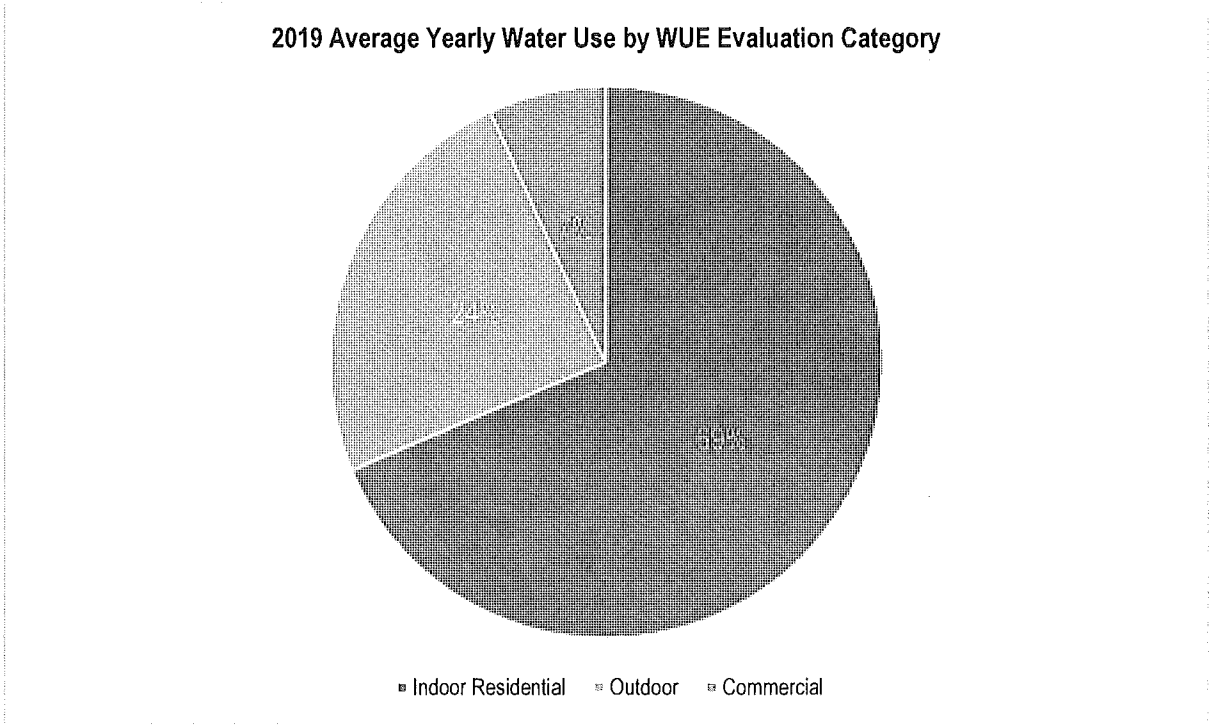

Figure 5-3 2019 Average Yearly Water Use by WUE Evaluation Category

The water use efficiency goal for the District is to maintain their current water use efficiency. Yearly fluctuations in water use are anticipated but the District's goal is to keep the 3-year water use average to around 180 gallons per day per ERU.

According to the WUE program requirements, there are measures that must be implemented. Because these measures are mandatory, they do not count towards the minimum measures required to implement in the WUE program. They include:

- Install production (source) meters

- Install consumption (service) meters
- Perform meter calibration
- Implement a water loss control action plan to control leakage
- Educate customers about water use efficiency practices

As discussed above, DOH requires a water system to implement a certain number of measures based on size. For Lake Meridian Water District, the required number is six. If a specific WUE measure is being implemented for different customer classes, it counts as multiple WUE measures. Excluding the required measures that are listed above, the proposed program contains 10 measures, 4 more measures than required. Measures required are not listed in the following program but noted above.

5.4.1 Indoor Residential

Customer Assistance

The District will provide the bills showing consumption history. The bill will include water use over the same period from the prior year as well as the classification average water use.

Conservation Pricing

The District will maintain a conservation-oriented pricing structure with increasing block rates to provide an economic conservation incentive to its customers.

Incentives

The District will provide a washer rebate of $50 for approved machines.

The District will encourage and periodically provide water conservation items to single-family homes and the owners and managers of multifamily buildings. These items will be available free of charge.

The District will support any new code required by the local jurisdiction for all new construction to install low-flow devices before connection to the system.

Program Promotion

The District will participate in media and advertising opportunities. They will participate in the Puget Sound Water Conservation Coalition, which provides local newspapers with information for news articles or feature pieces on water supply and conservation, as necessary. Also, the District will publish a quarterly newsletter, *Water Biz,* which provides customers with information on programs, conservation tips, and additional resources.

5.4.2 Outdoor

Nurseries/Agriculture - Landscaping

The District will support, encourage, and provide resources on the use of native vegetation, drought tolerant and xeriscaping (low water use landscaping) methods.

The District will provide rain gauges periodically to its customers to track rainfall. The gauge can also be used to track how much water was applied to lawns and landscape.

5.4.3 Industrial/Commercial/Institutional

Conservation Pricing

The District will provide the water bill showing consumption history. Although this measure was implemented for the indoor residential category, it will also be used to for this implementation category.

5.4.4 Reclaimed Water Analysis

The District may develop projects or consider participation as appropriate in the water reuse projects and programs developed by adjacent jurisdictions and others, including demonstration or pilot projects that may be developed in accordance with applicable federal, state, and local laws and regulations.

District staff may investigate and recommend proposed changes to the District's development and service policies and regulations that may be desirable to encourage the promotion of these programs and technologies.

In accordance with the District's commitment, it may continue to work with other agencies to identify opportunities and explore ownership and management options to produce and deliver reclaimed water within the District. However, Attachment 9 of the Municipal Water Law has been completed for any potential reclaimed water users and can be found in Appendix P.

5.4.5 Summary of Recommended Water Use Efficiency Savings

The future water demand forecast in Chapter 2 includes demand forecasting for two customer classes: residential and commercial/other. If the District's WUE Program implementation continues to be as successful as in past years, future water demand will be less than that shown in Chapter 2. The water savings shown reflect the conservative planning water use of 200 gallons per ERU compared to the WUE goal of maintaining a 3-year average water use of 180 gallons per ERU. Table 5-3 and Table 5-4 provide a summary of the Water Demand Forecast. The water use efficiency demand projections are based on the non-conservation demand forecast and implementation of the described water use efficiency program.

Table 5-3
Summary of Water Demand Forecast (MGD)

Classification	2020	2021	2022	2023	2024	2025	2040
ADD w/o WUE	1.63	1.64	1.66	1.67	1.68	1.70	1.81
ADD w/ WUE	1.55	1.57	1.58	1.59	1.60	1.62	1.72
Savings	*0.08*	*0.08*	*0.08*	*0.08*	*0.08*	*0.08*	*0.08*
MDD w/o WUE	2.93	2.96	2.98	3.00	3.03	3.05	3.25
MDD w/ WUE	2.80	2.82	2.84	2.86	2.89	2.91	3.10
Savings	0.14	0.14	0.14	0.14	0.14	0.14	0.15
% Savings	4.7%	4.7%	4.7%	4.7%	4.7%	4.7%	4.7%

Table 5-4
Total Demand (MG)

	Without WUE	With WUE	Total Savings (MG)
2019	594.80	566.97	27.83
2026	622.30	593.04	29.26
2030	634.84	604.98	29.86
2040	659.64	628.80	30.84

The District's WUE Program is a critical element of its efforts to achieve water savings. It is important for the District to continue the existing program and implement enhanced and/or new measures as discussed herein. As previously mentioned, the substantial water demand per ERU savings of 15% higher than the 1997 projections are a direct result of the targeted measures in the District's Water Conservation Program.

Chapter 5 Water Use Efficiency

5.1 History

The Lake Meridian Water District (District), along with other water purveyors and cities in the Puget Sound region, continues to experience population growth that will eventually demand more water than will be available from current regional supply sources.

In 1985, South King County, in which the District is located, was declared a Critical Water Supply Service Area (CWSSA). The South King County Regional Water Association (SKCRWA) was formed in 1989, to develop a Coordinated Water System Plan (CWSP) to ensure that member agencies would have sufficient water supply to meet the needs of the fast-growing area between Seattle and Tacoma. The CWSP included a water conservation element outlining regional and local conservation objectives, including a target reduction of 6.5% by the year 2000 for purveyors of utilities serving 500 or more customers, such as the District. No target reductions were established by the SKCRWA beyond 2000.

The District began its conservation program in 1997 and has produced quantifiable water savings through operations and maintenance, plumbing retrofit programs, water rates, metering approaches, and information programs to educate customers about conservation. In 1997, the District developed a conservation program with the goal of 0.5% per year reduction to the year 2000, and 1% per year thereafter. The resulting projected water use at 20 years (2017) was 212 gallons per day (gpd)/equivalent residential unit (ERU).

The District has maintained its existing program and added elements it deemed necessary and appropriate to meet its commitment to conserving water with excellent results. From 1997 to 2000, the District reduced demand from 255 gpd/ERU to 240 gpd/ERU, a total reduction of 5.9%. While the CWSP target reduction was 6.5% over 11 years (1989 – 2000), the District nearly exceeded it in just three years (1997 – 2000). From 1997 to 2004, the District reduced demand from 255 gpd/ERU to 205 gpd/ERU, a reduction of over 3% per year. From 2004 to 2014 a further reduction of around 28 gpd/ERU, from 205 gpd/ERU to 177 gpd/ERU was achieved. This represented an average reduction of approximately 1.45% per year. These reductions clearly exceed the District's phased targets of 0.5% and 1%.

Having already met and exceeded their conservation goals, the District set a new goal in 2017 to maintain a 3-year average water use at or below 180 gallons per ERU. This goal was met between 2017 and 2019 as water demand never exceeded 180 gallons per ERU. A graphical comparison of the 1997 projection and the historical water savings is shown in Figure 5-1.

In addition to the development of the CWSP, SKCRWA's initial efforts focused on evaluating water supply opportunities that would provide the reliability and water quality needed to meet future needs. Early on, interties with the larger systems operated by Seattle and Tacoma looked attractive. The potential to further develop the Green River for additional municipal water supply became the early focus of the SKCRWA. Acting on behalf of several of its members, the SKCRWA entered into a contract to participate in the development of the Second Supply Project of Tacoma. Later the SKCRWA supported members developing a Joint Operating Agreement (JOA) for cooperative water supply development. The JOA has been used by members as a basis to craft specific water supply agreements. SKCRWA also provided coordination and leadership to develop the South King County Groundwater Management Plan, and more recently, the

SKCRWA has focused on representing members at regional and state water forums and with state agencies.

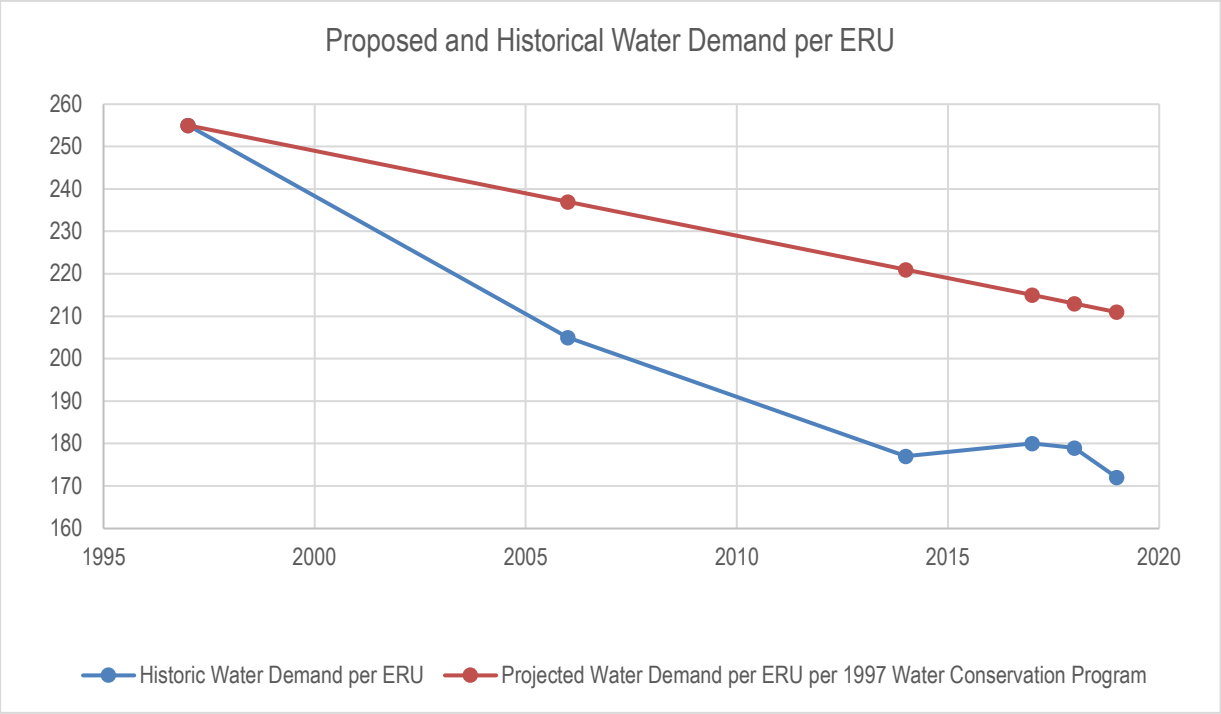

Figure 5-1 Proposed and Historical Water Demand per ERU

5.2 Regulatory Requirements

The Washington Water Utilities Council, Washington State Department of Health (DOH), and Department of Ecology (DOE) jointly developed Conservation Planning Requirements (CPR) Guidelines and Requirements for Public Water Systems Regarding Water Use Reporting, Demand Forecasting Methodologies, and Conservation Programs. Interim guidelines were first established in 1990, and subsequently finalized and approved in 1994. The DOH published the CPR in 1994.

The CPR includes guidelines for public water systems in preparing and implementing conservation plans and programs to monitor water use. The CPR suggests that a water agency's conservation plan include the following three components:

1. Water use data collection
2. Demand forecasting
3. Conservation program development

DOH approval of an agency's conservation plan is based upon review of all three components of the conservation plan. The only substantial difference between the CPR and the CWSP is the quantitative target.

Additionally, Chapter 5 of the Municipal Water Supply – Efficiency Requirements Act, amended and clarified sections of the State Board of Health Code, RCW 43.20; the laws governing Public Water Systems RCW 70.119A; and sections of the State Water Code, RCW 90.03 were amended in 2003 and revised in

2012. In 2004, DOH published *Municipal Water Law: Interim Planning Guidance for Water System Plan/Small Water System Management Program Approvals* that includes conservation requirements for systems with 1,000 or more connections to facilitate compliance with these regulatory requirements.

5.3 Historical Water Conservation Program

As noted earlier, the District first developed a Water Conservation Program in 1997 as part of its Water Comprehensive Plan. In accordance with the WAC 246-290-810(4)(d)(i), which requires a minimum of 6 measures for a system with connections between 2,500 and 9,999, there were 11 measures within four categories that the District implemented. In some categories, the District implemented other program elements which were not required. The District has complied with the CPR for its historical program and is shown in the CPR format in Table 5-1. The historical measures are identified as *conservation*, while the proposed program will be identified as *water use efficiency (WUE)*.

Table 5-1
Summary of Historical Water Use Efficiency Program

	Required By CPR
PUBLIC EDUCATION	
Program Promotion	√
The District, as required, provides an annual Consumer Confidence Report (CCR) which outlines the water source, contaminant levels, violation of contaminates, etc. Conservation information is generally included as part of the CCR.	
The District, as required, completes a Lead and Copper Report that provides a summary of levels in the water. Conservation information is generally included in this Report as well.	
The District makes available literature on water conservation practices, efficiency standards for plumbing fixtures, and water conserving landscaping.	
The District participates in the Puget Sound Water Conservation Coalition, which provides local newspapers with information for news articles or feature pieces on water supply and conservation, as necessary.	
TECHNICAL ASSISTANCE	
Purveyor Assistance	√
Not applicable.	
Customer Service	√
The District routinely monitors water usage for all residential and commercial accounts. If a significant deviation from past usage is noticed, the customer is notified immediately.	
The District provides assistance to prospective new customers regarding water conservation practices by having brochures and materials available at its office.	
The District offers assessments and audits of local school facilities.	
Bill Showing Consumption History	√
Customers' water bills include water use over the same period from the prior year as well as the classification average water use.	

Table 5-1
Summary of Historical Water Use Efficiency Program

	Required By CPR
SYSTEM MEASURES	
Source Meters	√
The District is metered at all source connections. These meters assist in system management and water accounting. Meters are maintained and tested on a regular basis.	
Service Meters	√
The District requires all water to be metered at the point of use.	
The District has a water meter replacement program, which allows the District to replace meters on a 20-year cycle.	
The District requires any person who desires to use District water from an unmetered source to rent a meter and pay the District for water used.	
Unaccounted Water/Leak Detection	√
The District requires developers and contractors to use a hydrant meter during the construction of projects.	
When anomalies appear on customer's water bills the District investigates for the source of the problem.	
The District cleans and scours all watermains on a five-year cycle as part of a flushing program. The water is accounted for by the use of a flow meter.	
INCENTIVES/OTHER MEASURES	
Single-Family/Multifamily Kits	√
The District encourages and periodically provides water conservation items to single-family homes and the owners and managers of multifamily buildings. Conservation items available free of charge include toilet leak detection tablets.	
The District supports new codes required by local jurisdictions for all new construction to install low-flow devices before connection to the system.	
Nurseries/Agriculture	√
The District provides informational pieces on watering practices and the use of native vegetation.	
Landscape Management/Playfields	√
The District supports, encourages, and provides resources on the use of native vegetation, drought tolerant and low water use landscaping.	
The District has rain gauges available for its customers to track rainfall. The gauges can also be used to track how much water was applied to lawns and landscape.	
Conservation Pricing	√
The District maintains a conservation-oriented pricing structure with increasing block rates to provide an economic conservation incentive to its customers.	

Table 5-1
Summary of Historical Water Use Efficiency Program

	Required By CPR
Utility Financed Retrofit	
The District provides a washer rebate for $50 for approved machines.	
The District contributed $300 to the Kent School District for retrofitting water fixtures in June 2005 at the Martin Sortun Elementary School	

5.3.1 Historical Water Savings

The 1997 Comprehensive Plan established a water demand per ERU value of 300 gallons per account. Less the unaccounted-for water, the water demand per ERU value is calculated to be 255 gallons per account in 1997. Taking the District's 1997 phased conservation goals of 0.5% to the year 2000 and 1% thereafter, the proposed goal for 2019 was 211 gallons per ERU. The actual 2019 ERU was 172 gallons per ERU which is approximately 22% less than the 1997 goal. Savings realized as a result of the District's 1997 Water Conservation Program are illustrated in Figure 5-1.

The District's distribution system leakage (DSL) has remained below the District's policy of a DSL of 10% or less. The average percent of DSL for the past three years has been 6.0%, however this average includes an outlier of 2% DSL in 2018. Taking the average of only 2017 and 2019 returns a value of 8.2%. The District desires to use conservative water demand projections and therefore will continue to use 10% DSL as a planning value. Additional information can be found in Table 2-5 of Chapter 2.

The actual water usage by customer class from 1999 to 2019 usage is shown below in Table 5-2. The data reflects end-of-year values. It can be noted from this table that the average daily usage was decreased significantly in single-family residential and multifamily residential with the most significant reduction in the single-family customer class, decreasing 25.8% since 1999. The fire protection class was not evaluated, as this annual volume is dependent on emergency use. The commercial/other class usage has decreased 9.4% since 1999. Table 2-7 of Chapter 2 displays actual water usage by customer class for each year from 2017 to 2019.

Table 5-2
Actual Average Day Demand by Customer Class

		1999	2019	% Conservation
Single-Family Residential	Gal per Account	230	171	25.8%
Multifamily Residential	Gal per Account	2,097	1,883	10.2%
Fire Protection	Gal per Account	15	2	N/A
Commercial/Other	Gal per Account	979	887	9.4%
Distribution System Leakage	% Total Consumption	1.0%	7.8%	-6.8%

5.3.2 Seasonal Water Usage

Water usage can vary significantly depending on the season. Figure 5-2 shows the billed usage of each customer class. The District bills on a two-month cycle so the figure shows the average for two months. The graph shows that during the summer months Single-Family Residential accounts and Irrigation accounts use significantly more water while Multifamily Residential and Commercial accounts are fairly steady throughout the year. These patterns can be attributed to the watering of lawns and irrigation of crops during the dryer summer months. Multifamily Residential and Commercial buildings generally do not require a large amount of irrigation and thus show a steady use of water throughout the year.

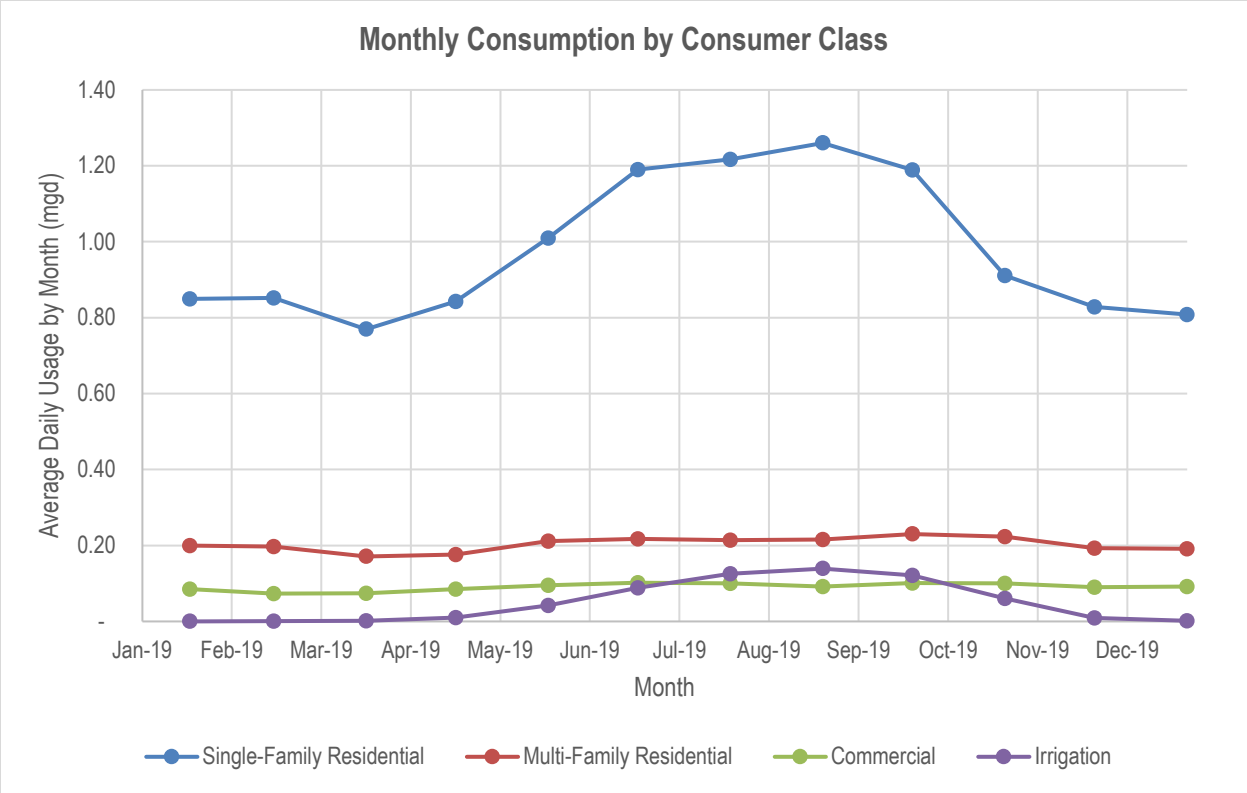

Figure 5-2 Monthly Consumption by Consumer Class

5.3.3 Evaluation of Water Use Efficiency Measures

As part of a water system plan, the District is required to evaluate water use efficiency measures. The evaluation focuses on customer demand efficiencies. Measures must be evaluated for cost-effectiveness from the following categories according to WAC 246-290-810(4)(d):

- Indoor residential
- Outdoor
- Industrial/commercial/institutional

For water systems with 1,000 or more connections there are three evaluation criteria when determining if a WUE measure is cost effective. They include:

- Water System's Perspective: Determine if the measures are cost-effective. This can be represented by whether the revenue meets the expenditure demands.

- Cost-Sharing Perspective: Evaluate cost-effectiveness if the costs were shared with other entities, such as neighboring water systems and water conservation partners.
- Societal Perspective: Evaluate if it would be cost-effective if all costs and benefits were included, including environmental, recreational, or aesthetic benefits.

5.4 2023-2029 Water Use Efficiency Program

The District's 2023-2029 Water Use Efficiency Program will remain the same but will be organized differently according to the implementation evaluation categories which include indoor residential, outdoor, and industrial/commercial/institutional. This program will assist in achieving the District's water conservation goal. No existing program measures have been recommended to be discontinued.

On a yearly average, indoor residential water usage accounts for the majority of water usage (69%) in the District in 2019. Figure 5-3 shows a breakdown of water usage for each of the WUE evaluation categories. The following sections provide a breakdown of programs that target each category.

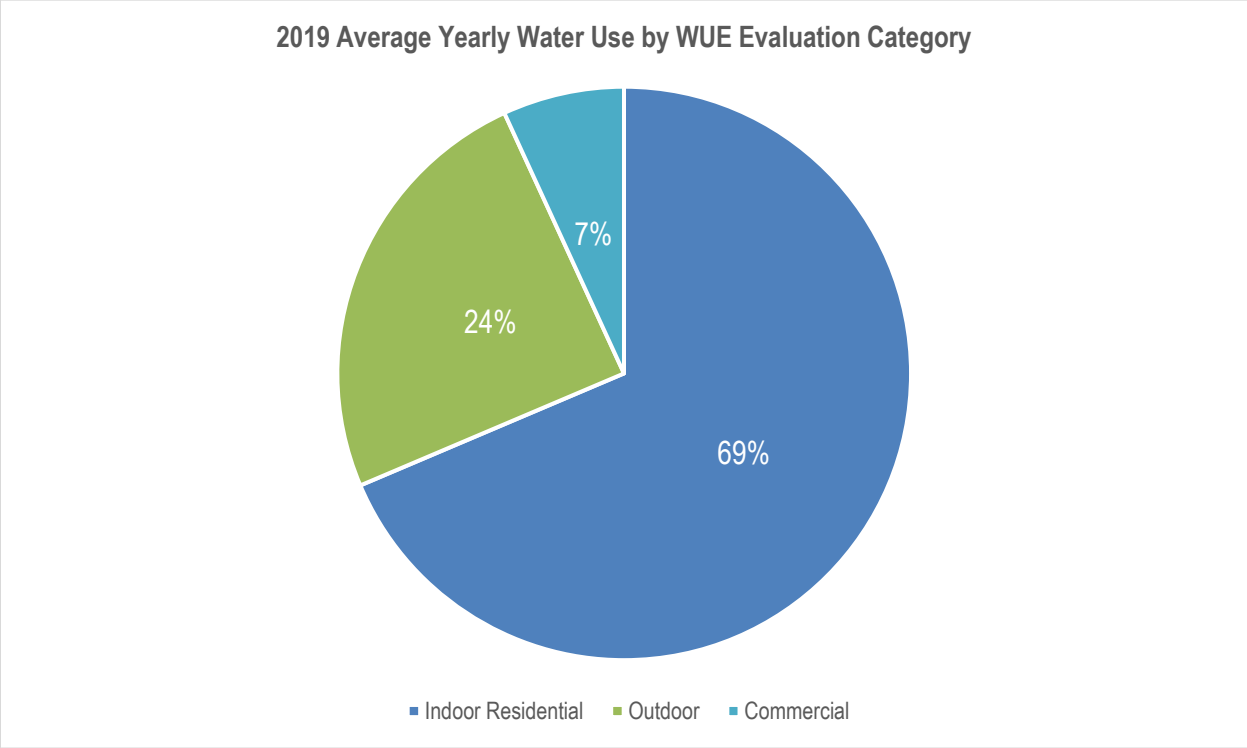

Figure 5-3 2019 Average Yearly Water Use by WUE Evaluation Category

The water use efficiency goal for the District is to maintain their current water use efficiency. Yearly fluctuations in water use are anticipated but the District's goal is to keep the 3-year water use average to around 180 gallons per day per ERU.

According to the WUE program requirements, there are measures that must be implemented. Because these measures are mandatory, they do not count towards the minimum measures required to implement in the WUE program. They include:

- Install production (source) meters

- Install consumption (service) meters
- Perform meter calibration
- Implement a water loss control action plan to control leakage
- Educate customers about water use efficiency practices

As discussed above, DOH requires a water system to implement a certain number of measures based on size. For Lake Meridian Water District, the required number is six. If a specific WUE measure is being implemented for different customer classes, it counts as multiple WUE measures. Excluding the required measures that are listed above, the proposed program contains 10 measures, 4 more measures than required. Measures required are not listed in the following program but noted above.

5.4.1 Indoor Residential

Customer Assistance

The District will provide the bills showing consumption history. The bill will include water use over the same period from the prior year as well as the classification average water use.

Conservation Pricing

The District will maintain a conservation-oriented pricing structure with increasing block rates to provide an economic conservation incentive to its customers.

Incentives

The District will provide a washer rebate of $50 for approved machines.

The District will encourage and periodically provide water conservation items to single-family homes and the owners and managers of multifamily buildings. These items will be available free of charge.

The District will support any new code required by the local jurisdiction for all new construction to install low-flow devices before connection to the system.

Program Promotion

The District will participate in media and advertising opportunities. They will participate in the Puget Sound Water Conservation Coalition, which provides local newspapers with information for news articles or feature pieces on water supply and conservation, as necessary. Also, the District will publish a quarterly newsletter, *Water Biz,* which provides customers with information on programs, conservation tips, and additional resources.

5.4.2 Outdoor

Nurseries/Agriculture - Landscaping

The District will support, encourage, and provide resources on the use of native vegetation, drought tolerant and xeriscaping (low water use landscaping) methods.

The District will provide rain gauges periodically to its customers to track rainfall. The gauge can also be used to track how much water was applied to lawns and landscape.

5.4.3 Industrial/Commercial/Institutional

Conservation Pricing

The District will provide the water bill showing consumption history. Although this measure was implemented for the indoor residential category, it will also be used to for this implementation category.

5.4.4 Reclaimed Water Analysis

The District may develop projects or consider participation as appropriate in the water reuse projects and programs developed by adjacent jurisdictions and others, including demonstration or pilot projects that may be developed in accordance with applicable federal, state, and local laws and regulations.

District staff may investigate and recommend proposed changes to the District's development and service policies and regulations that may be desirable to encourage the promotion of these programs and technologies.

In accordance with the District's commitment, it may continue to work with other agencies to identify opportunities and explore ownership and management options to produce and deliver reclaimed water within the District. However, Attachment 9 of the Municipal Water Law has been completed for any potential reclaimed water users and can be found in Appendix P.

5.4.5 Summary of Recommended Water Use Efficiency Savings

The future water demand forecast in Chapter 2 includes demand forecasting for two customer classes: residential and commercial/other. If the District's WUE Program implementation continues to be as successful as in past years, future water demand will be less than that shown in Chapter 2. The water savings shown reflect the conservative planning water use of 200 gallons per ERU compared to the WUE goal of maintaining a 3-year average water use of 180 gallons per ERU. Table 5-3 and Table 5-4 provide a summary of the Water Demand Forecast. The water use efficiency demand projections are based on the non-conservation demand forecast and implementation of the described water use efficiency program.

Table 5-3
Summary of Water Demand Forecast (MGD)

Classification	2020	2021	2022	2023	2024	2025	2040
ADD w/o WUE	1.63	1.64	1.66	1.67	1.68	1.70	1.81
ADD w/ WUE	1.55	1.57	1.58	1.59	1.60	1.62	1.72
Savings	*0.08*	*0.08*	*0.08*	*0.08*	*0.08*	*0.08*	*0.08*
MDD w/o WUE	2.93	2.96	2.98	3.00	3.03	3.05	3.25
MDD w/ WUE	2.80	2.82	2.84	2.86	2.89	2.91	3.10
Savings	0.14	0.14	0.14	0.14	0.14	0.14	0.15
% Savings	4.7%	4.7%	4.7%	4.7%	4.7%	4.7%	4.7%

Table 5-4
Total Demand (MG)

	Without WUE	With WUE	Total Savings (MG)
2019	594.80	566.97	27.83
2026	622.30	593.04	29.26
2030	634.84	604.98	29.86
2040	659.64	628.80	30.84

The District's WUE Program is a critical element of its efforts to achieve water savings. It is important for the District to continue the existing program and implement enhanced and/or new measures as discussed herein. As previously mentioned, the substantial water demand per ERU savings of 15% higher than the 1997 projections are a direct result of the targeted measures in the District's Water Conservation Program.

Meeting Minutes
of the
Board of Commissioners
Lake Meridian Water District
Regular Meeting on **March 9, 2023, 10:00 a.m.**

The Board meeting of Lake Meridian Water District was held.

Commissioners Hanis, Wilson, and Cline, along with District staff Chris Hall, general counsel Curtis Chambers, and consultant engineer Maddy McCrosky met for a regular meeting to consider all business that may come before the Board.

Additions & Changes to the Agenda

Executive session pursuant to RCW 42.30.110(1)(i) was added to the agenda.

The Water Use Efficiency Goals pursuant to WAC 246-290-830 was moved to the Engineer's report.

The shop improvement update and DE updates were moved to the Manager's report.

Consumers & Public Comment

None. An express opportunity was offered for the public to comment on the District's Water Use Efficiency Goals pursuant to WAC 246-290-830. No comment was provided.

Attorney Report

None

Engineer's Report

Consultant Engineer Maddy McCrosky provided a Water Use Efficiency Goals pursuant to WAC 246-290-830 presentation. Commissioner Wilson moved to adopt the District's Water Use Efficiency Goals as presented in Chapter 5 of the draft Comprehensive Water System Plan pursuant to Resolution 679-03-23. Commissioner Cline seconded, and it passed unanimously.

LMWD/CWD service area meeting update given.

Water system plan meeting update given.

Well 6 update given.

635 zone project update given.

Operation's Report

None

Manager's Report

Personnel update given. Commissioner Cline moved to authorize and direct the District Manager to hire a technician 1 and Operations Manager. Commissioner Wilson seconded the motion, and it passed unanimously. Commissioner Wilson moved to adopt the salary schedule for personnel as presented, to be effective April 1, 2023. Commissioner Cline seconded, and the motion passed unanimously.
No budget and project update was given.

Executive Session pursuant to RCW 42.30.110(1)(i) for potential litigation

At 10:54, the Board announced it was going into executive session pursuant to RCW 42.30.110(1)(g) to discuss performance of a public employee, for five minutes, expecting to exit at 10:59. At 10:59, the Board announced it was extending the executive session for five minutes, expecting to exit at 11:04. At 11:04, the Board extended the executive session for an additional two minutes, announcing it expected to exit the executive session at 11:06. The Board exited the executive session at 11:06.

Approval of Minutes

On motion made, seconded, and approved unanimously, the minutes of the following meetings were approved:

February 23, 2023
February 28, 2023

Leak Credits

On motion duly made, seconded, and carried unanimously, the following leak credits were approved:

$512.22	Account #680363	24422 133rd SE, Kent
$413.60	Account #110142	13802 SE 275th, Kent
$332.70	Account #180075	15429 SE 277th Pl, Kent

Approval of Vouchers

Vouchers audited and certified by the auditing officer as required by RCW 42.24.080, and those expense reimbursement claims certified as required by RCW 42.24.090, have been recorded on a listing, were submitted to the Board for approval. As of this date the Board, by unanimous vote, does approve for payment those vouchers included in the following list and further described as follows.

Vendors	20530 – 20559	$109,208.69

The meeting was concluded at 11:09 a.m.

BOARD OF COMMISSIONERS
LAKE MERIDIAN WATER DISTRICT

_____
Patrick M. Hanis, President

_____
Charles E. Wilson, Secretary

_____
Gary G. Cline, Commissioner

Lake Meridian
WATER DISTRICT

Mission Statement

Dedicated to provide the best quality water to the Lake Meridian area at the lowest possible price.

District Office
27224 144th Ave SE
Kent, WA 98042
253-631-3770 Office
253-859-6870 After Hours
253-631-8072 Fax
Contact via E-mail

Welcome Home

Pay Now
Paystation.com

Thanks for visiting your Water District. Please review our 2021 Consumer Confidence Report and see how we're doing.

Special Notice	
Feb 22, 2023	Water Use Efficiency Goals - Board Meeting March 9, 2023 at 1 More

Frequently Asked Questions

How many gallons are in a CCF?

You are billed in units of 100 cubic feet (1 ccf). There are approximately 748 gallons in 1 ccf.

• View All F.A.Q.'s

Top of Page

Google Search

internet lakemeridianwater.com

TRUSTED COMMERCE
CLICK TO VALIDATE

A member of the **H2O Webs** network of Utility Districts.
Copyright © 2004-2023 H2O Webs - a BlueDenham company - All rights reserved.

Print Story
Close Window

Water Use Efficiency Goals - Board Meeting March 9, 2023 at 10 a.m.
Wednesday, February 22, 2023

Pursuant to WAC 246-290-830, at its regular meeting on March 9, 2023 at 10:00 a.m., the Board of Commissioners for the Lake Meridian Water District shall consider and set water use efficiency goals for the District. During this meeting, the public has the opportunity to participate and comment on the proposed water use efficiency goals.

Chapter 5 WUE

Attend via Zoom telephonically +1 253 215 8782, Meeting ID: 814 2131 2080, Passcode: 189855

¤

Top of Page
Close Window

Copyright © 2004-2023 - Lake Meridian Water District
All rights reserved.

facebook

Log In

Lake Meridian Water District

125 followers • 11 following

Posts About Photos Videos •••

Intro

Lake Meridian Water District (formerly Water District #111) serves safe and reliable water to custom

Page · Government organization

27224 144th Ave SE, Kent, WA, United States, Washington

(253) 631-3770

Connect with Lake Meridian Water District on Facebook

Log In or Create new account

facebook

Log In

Photos

See all photos

Privacy · Terms · Advertising · Ad Choices · Cookies · More · Meta © 2023

Lake Meridian Water District
1d ·

Pursuant to WAC 246-290-830, at its regular meeting on March 9, 2023 at 10:00 a.m., the Board of Commissioners for the Lake Meridian Water District shall consider and set water use efficiency goals for the District. During this meeting, the public has the opportunity to participate and comment on the proposed water use efficiency goals. You can access our Water Comprehensive Plan Chapter 5 which outlines the District's current water use efficiency goals along with a Zoom link for the March 9th meeting on our website at lakemeridianwater.com

Connect with Lake Meridian Water District on Facebook

Log In or Create new account

facebook Log In

City of Kent Mayor Dana Ralph proclaimed October 4 “Charley Wilson Day”, recognizing his public service, and full life as a former disc jockey, UW football player and graduate, career as an educator and principal in the Kent School District, father, husband, veteran of WWII, among many other accomplishments. He’s also one of the best people you will ever meet.

His... **See more**

10 2

Like Comment

Only people who follow this Page for more than 24 hours can

Connect with Lake Meridian Water District on Facebook

Log In or Create new account

facebook

Log In

Laura Thomas You know you are from Kent Washington when...

July 26, 2022 ·

https://youtu.be/uEDAYIXCyvM

YOUTUBE.COM

Driving On WA SR-516 West In 1983 (Covington, Kent, Des Moines)

8 1

Like Comment Share

Michelle Grube Jones

Crazy!!

30w

Connect with Lake Meridian Water District on Facebook

Log In or Create new account

facebook

Log In

Connect with Lake Meridian Water District on Facebook

Log In or Create new account

Appendix Q

Disinfection Byproducts Plan

THIS PAGE INTENTIONALLY BLANK.

Disinfection Byproducts Monitoring Plan

System Name	King County Water District #111	**Type and Population of System**	GW only >10,000
PWSID#	Enter ID # 41900B		
Date	8/12/2005		
Completed by	Michael Karl		

Monitoring requirements are additive; for example a system using ozone and chlorine, or chlorine with conventional filtration must meet the monitoring requirements for both.

Treatment Provided

Chlorine (gas, hypochlorite, etc) or Chloramines

Identify the number of "Treatment Plants" serving your system

A "Treatment Plant" or "TP" may be:

- A single surface water source
- A single well source
- A combination of multiple, individual sources (if all of the water is blended prior to distribution)

4

Enter Description of Treatment Plant Below

TP1	Well #3 (SO4) Well Address 24806 148th AVE SE (Volume 325 gpm)
TP2	Well #5 (SO6) Well Address 25303 128th AVE SE (Volume 135 gpm)
TP3	Well #6 (SO7) Well Address 13120 SE 282nd Way (Volume 650 gpm)
TP4	Well #9 (SO8) Well Address 27501 151st Pl SE (Volume 800 gpm)

Disinfectant Monitoring

Required:

Chlorine residuals must be measured at the same time and place as routine or repeat coliform samples
MRDL for chlorine and chloramines = 4.0 mg/l as Cl2

Compliance

Compliance is based on the running annual average (RAA) of 12 consecutive months
DOH will determine compliance for chlorine MRDL
Daily residual measurements will not be included in the compliance calculations

Byproduct Monitoring

Required:

TTHM & HAA5 - 1 sample per quarter per treatment plant (four samples total)
[samples should be collected at MRT relative to each treatment plant]
TTHM MCL = 0.080 mg/l, HAA5 MCL = 0.060 mg/l

Compliance

Compliance is based on the Running Annual Average (RAA) of quarterly results or averages
Any RAA of quarterly averages that exceeds the MCL is a violation
DOH will determine compliance for TTHM & HAA5 based on data submitted by the lab

Specify sampling location(s) for:

TTHM & HAA5	Enter Sampling Locations	Enter sampling schedule
TP1 (MRT)	24821 144th Pl SE	February, May, June and August
TP2 (MRT)	24028 129th Ct SE	February, May, June and August
TP3 (MRT)	12502 SE 277th Pl	February, May, June and August
TP4 (MRT)	28102 153rd Ave SE	February, May, June and August

No information needed here

Attach a distribution map with sample locations

Reduced Monitoring

To qualify for reduced monitoring the following criteria must be met (and State must approve)
TTHM RAA < 0.040 mg/l AND HAA5 RAA < 0.030 mg/l for two consecutive years
Monitoring may then be reduced to 1 sample per treatment plant per year
during month of warmest water temperature

Appendix R

Blending Study

THIS PAGE INTENTIONALLY BLANK.

confluence ENGINEERING GROUP LLC
517 NE 92nd Street, Seattle, WA 98115 ph (206) 527-6832 fx (206) 527-3148 confluence-engineering.com

To:	Ron Dorn, PE; BHC Consultants	**Subject:**	Blending Study – Municipal Use of Tacoma Water
From:	Stephen Booth, Ph.D., Amie Hanson, PE; Confluence	**Project:**	Water District #111 Water System Plan Update 2016
Date:	May 26, 2016		

Introduction and Objective

King County Water District #111 (District) is seeking a status change from emergency to municipal use for water purchased from Tacoma Water. As required by the Department of Health, Office of Drinking Water as a condition to this change Confluence Engineering Group, LLC, as a subconsultant to BHC Consultants, has performed a blending study to evaluate potential water quality impacts that might result from the introduction of treated Tacoma Water at the southern end of the District's distribution system. This evaluation considered regulatory compliance, potential changes in corrosivity due to blending, aesthetic water quality conditions, and operational considerations.

Background

The District operates four production ground water wells and purchases water from the City of Auburn to serve 18,000 customers. The District's distribution system consists of 75% cement-lined ductile iron pipe, some asbestos cement pipe, and a small amount of cast iron pipe. Auburn water is a blend of well and spring supplies and water purchased from Tacoma Water. Tacoma Water is primarily a surface water supply that had been unfiltered until late 2014 when the newly constructed Green River Filtration Facility (GRFF) began operation. Tacoma Water provides corrosion control treatment of this supply by adjusting the pH to 8.0 and alkalinity to 20 mg/L using caustic soda.

The District is planning to purchase water from Tacoma Water through an agreement with the Covington Water District. The agreement is effective January, 2017, and the District will purchase a minimum of 750,000 gallons per day between October 1 and May 31 and 1,000,000 gallons per day during the summer months. The water from Tacoma Water will enter the distribution system through an existing intertie with Covington Water District at SE 288th St (with a possible future intertie also at 272nd St.), downstream of the CT compliance point at the Covington Turn-out. The Tacoma Water will consist primarily of water treated at the GRFF and water from the Tacoma Water North Fork wellfield. This evaluation has focused on water quality characteristics of the GRFF supply and, where available, the water quality data collected at the Covington Turn-out, which is most representative of the water the District will be receiving.

Approach

This study included the following steps:

- Available District water quality data were reviewed.
- Data gaps were identified.

- A water quality monitoring plan was developed and implemented during one day of water quality testing at various locations in the District's system, to fill key data gaps. Sampling locations included points of entry of the well supplies, the Auburn intertie, finished water storage facilities, and distribution system monitoring locations. This monitoring was completed on September 24, 2015.
- Collecting water quality data from Tacoma Water.
- Evaluating potential water quality concerns in the distribution system due to blending of the supply from Tacoma Water using blending models and other spreadsheet water quality tools.

Water Quality Data

Table 1 provides water quality data for the District's existing well water supplies and the City of Auburn water. Water quality data collected by Confluence and District staff during field monitoring are included in Table 1. Water quality parameters were selected by Confluence to supplement existing data provided by the District. The District's water sample logs for 2011 through 2014 were also reviewed. There was good agreement between the District's 2014 inorganic chemical data (IOC) and the data collected by Confluence.

Table 1: Water Quality for the District's Existing Sources of Supply

Parameter	Well #3	Well #5	Well #6	Well #9	Auburn
Temperature (°C)[1]	12.1	11.4	10.6	11.4	16
pH[1]	7.8	7.6	8.1	8.2	7.3
ORP (mV)[1]	717	731	677	622	723
Dissolved Oxygen[1]	0.4	1.66	0.19	0.86	2.0
Conductivity (µmho/cm)[1]	247	334	235	232	216
Alkalinity (mg/L as $CaCO_3$)[1]	102	99	107	106	99
Hardness (mg/L as $CaCO_3$)	94	78	96	85	91[1]
Total Organic Carbon (mg/L)[1]	0.4	0.8	0.4	0.4	0.3
Ammonia (mg/L)[1]	< 0.015	< 0.015	0.026	0.061	< 0.015
Arsenic (mg/L) [1]	0.004	0.003	0.006	< 0.001	0.004
Calcium (mg/L as $CaCO_3$)[1]	65	58	73	63	58
Magnesium (mg/L) [1]	7	5	6	4	8
Nitrite (mg/L)	< 0.1	< 0.1	< 0.1	< 0.1	< 0.015[1]
Nitrate (mg/L)	< 0.2	< 0.2	< 0.2	< 0.2	
Silica (mg/L as SiO_2)[1]	38	46	29	40	34
Total Sulfide (mg/L)[1]	< 0.1	< 0.1	< 0.1	< 0.1	< 0.1
Chlorine, free (mg/L)[1]	1.42	1.36	1.10	1.25	0.77
Chlorine, total (mg/L)[1]	1.62	2.06	1.63	2.18	0.78
Total Dissolved Solids (mg/L)[1]	162	215	152	169	138
Iron (mg/L)[1]	0.02	0.02	0.03	0.03	0.02
Manganese (mg/L)[1]	0.018	0.010	0.007	0.016	0.027
Chloride (mg/L)[2]	10	47	10	12	
Sulfate (mg/L)[2]	12	< 1	8	< 1	
CSMR[3]	0.8	~47	1.2	~12	

Notes:

1. Data collected during field sampling on September 24, 2015.
2. Data collected in 2014.
3. Chloride to sulfate mass ratio.

The District's wells are similar with respect to temperature, pH, ORP, dissolved oxygen, alkalinity, calcium, magnesium, hardness, TOC, nitrate, nitrite, iron and manganese. Wells #6 and #9 contain ammonia, whereas ammonia was not detected in the other well waters. The treated water from Wells #5, #6, and #9 had a significant combined chlorine residual (*i.e*. the difference between free and total chlorine residuals). The free and total chlorine residuals were lower for the Auburn water with essentially no combined chlorine. The presence of combined chlorine is likely due to ammonia or organic nitrogen in the well water which is oxidized by free chlorine. The level of combined chlorine dissipates over time as the breakpoint reactions near completion and combined chlorine was negligible in the distribution system (see Table 3). Customers receiving elevated levels of combined chlorine (*i.e*. greater than 0.5 mg/L) may report an objectionable taste and/or odor due to the presence of di- and tri-chloramines.

Iron and manganese levels in the treated well waters are sufficiently low that aesthetic water quality issues due to these metals are not expected to be problematic, although since granular media filtration is provided at Wells #3, #5, and #9 to remove iron and manganese, lower levels were expected in the treated waters of those wells.

Chloride levels vary between 10 and 47 mg/L and sulfate varies from < 1 mg/L to 12 mg/L for the District's production wells. The chloride to sulfate mass ratio (CSMR) has been shown to be one indicator of galvanic corrosion which can, under specific conditions, indicate an increased tendency for lead corrosion, especially when that ratio exceeds 0.5. Those types of corrosion tend to be more problematic when there is a significant change in chloride or sulfate levels, such as when switching from aluminum sulfate to ferric chloride as the coagulant during drinking water treatment, which is not the case for the GRFF. The CSMR varies from 0.82 to approximately 47 for the District's production wells. Despite this wide range of CSMRs, the low levels of lead found during the District's Lead and Copper Rule sampling, discussed below, indicate that the specific types of corrosion correlated to the CSMR are of essentially no importance in the District's system. Treated Water from the GRFF was found to have chloride and sulfate levels of 1.8 and 2.1 mg/L during sampling conducted in 2012. These values result in a CSMR of 0.86 and is therefore similar to the District's Wells #3 and #6. Introduction of GRFF water into the system is not anticipated to significantly alter the CSMR.

The source waters for the GRFF include Green River water and North Fork well water, which was historically used to blend with Green River water during periods of high turbidity. These two waters are generally similar with respect to general water quality parameters and mineral content (Table 2).

Table 2: Comparison of Green River and North Fork Well Raw Waters

Parameter	Green River	North Fork
Alkalinity (mg/L as $CaCO_3$)	22.1	14.3
Ammonia (mg/L as N)	0.06	< 0.05
Calcium (mg/L)	4.9	4.3
Magnesium (mg/L)	0.87	0.85
Hardness (mg/L as $CaCO_3$)	17.8	14.6
pH	7.8	7.1
Silica	14.0	< 0.005 - 12.2
TDS (mg/L)	51	31

Notes:

1. Grab samples collected annually. Average results for the years 2008 through 2014 are presented.

Table 3 presents water quality data for the distribution system, including data collected at two finished water storage facilities (150,000 gallon and 2 MG reservoirs) and at two hydrants in the distribution system. Available water quality data for the GRFF finished water are also included in Table 3.

Tacoma Water currently maintains pH and alkalinity targets of 8.0 and 20 mg/L as $CaCO_3$ for the GRFF finished water. We understand the Tacoma Water will be re-evaluating those targets during 2016 and may consider increasing those targets to 8.2–8.3 and 30 mg/L as $CaCO_3$, to provide improved corrosion control treatment.

Table 3: District Distribution System Water Quality Data

Parameter	150K Reservoir[1]	2 MG Reservoir[1]	137th Ave Hydrant[1, 2]	138th Pl Hydrant[1, 3]	GRFF[4]
Temperature (°C)	18.6	18.8	17.3	20.2	3.2 - 18.1
pH	7.5	7.6	7.3	7.5	8.0
ORP (mV)	720	692	730	710	
Dissolved Oxygen	4.12	4.9	2.02	2.2	
Conductivity (µmho/cm)	209	197	213	229	114
Alkalinity (mg/L as $CaCO_3$)	86	81	98	98	Target: 10
Hardness (mg/L as $CaCO_3$)	79	74	93	86	42
Ammonia (mg/L)	< 0.015	0.001	0.003	< 0.015	< 0.03
Total Organic Carbon (mg/L)	0.4	0.4	0.3	0.4	1.34
Arsenic (mg/L)	0.003	0.003	0.004	0.003	< 0.001
Calcium (mg/L)	21.6	21.2	24.0	24.4	15
Magnesium (mg/L)	6	5	8	6	1.5
Nitrite (mg/L)	< 0.015	0.020	0.018	< 0.015	< 0.5
Nitrate (mg/L)					0.30
Silica (mg/L as SiO_2)	29	28	33	33	14.0
Total Sulfide (mg/L)	< 0.1	< 0.1	< 0.1	< 0.1	
Chloride (mg/L)					1.8
Chlorine, free (mg/L)	0.64	0.29	0.81	0.59	1.11
Chlorine, total (mg/L)	0.66	0.29	0.76	0.55	
Total Dissolved Solids (mg/L)	135	120	139	136	55
Iron	0.03	0.02	0.03	0.05	0.0063
Manganese	0.004	< 0.005	0.011	0.015	0.015
Color					< 15

Notes:

1. Data collected during field sampling on September 24, 2015.
2. 137th Ave. and SE 272nd St.
3. 138th Place and SE 253rd St.
4. An annual grab sample of raw water Green River and North Fork Well water collected for ammonia, arsenic, calcium, magnesium, nitrite, nitrate, silica, total sulfide, chloride, sulfate. Only nitrate and nitrite were included in 2015 North Fork Well sampling. An annual grab sample of finished GRFF water is collected for ammonia, arsenic, calcium, magnesium, nitrite, nitrate, chloride, sulfate, TDS, iron, manganese, and color. Data for 2014 and 2015 are shown. pH, temperature, and free chlorine residual are measured at the Covington Water District Turn-out and the average of daily average data for 2015 is shown.

GRFF water has significantly lower alkalinity, calcium, hardness, and total dissolved solids than the District's distribution system water. GRFF water has significantly higher total organic carbon than the District's system water. The pH of the GRFF water is somewhat higher than that of the District's distribution

system water. Free chlorine residuals for the GRFF are consistently higher at the Covington Turn-out compared to the District's system, although the GRFF water age is likely also much lower at that location. The GRFF water may help to increase chlorine residuals in the District's system. The GRFF water is likely saturated with dissolved oxygen since it is a surface water and ozone is used during treatment (although data were not available).

Blending Scenarios

Waters from the District's well supplies and from Tacoma Water will blend in the system. Each source of supply has its own point of entry and, as such, specific blending ratios will not be targeted and blending will occur based upon system operating conditions and demands. A wide range of blend ratios have therefore been considered in this analysis.

Regulatory Compliance Considerations

Regulatory compliance considerations with respect to blending of water from Tacoma Water within the District's distribution system are presented below.

Disinfection

The District provided information on distribution system water quality during 2014 in their most recent Consumer Confidence Report (CCR). According to the CCR, the District is in compliance with the Total Coliform Rule, with no positive coliform samples collected in 2014. The free chlorine residual was measured throughout the system, ranging from 0.3 to 1.6 mg/L, which is consistent with the data collected during field sampling on September 24, 2015.

Disinfectant data for the GRFF water are presented in Table 4. Daily average, minimum, and maximum pH, temperature and free chlorine residual data are available at the Covington Turn-out for the GRFF-treated water. The pH of the GRFF water at the Covington Turn-out varied from 7.1 to 9.4 in 2015. Despite this range, the 10th and 90th percentiles of the daily average pH were 7.8 and 8.2, respectively, indicating a stable pH at the Covington Turn-out. The temperature of the GRFF-treated water at the Covington Turn-out ranged from 3.2 to 18.1°C, a wider range in temperatures compared to the District's well water supplies, although the average water temperature of approximately 11.1°C, is similar to that of the District's system water.

Table 4: Disinfectant Data for GRFF Water at the Covington Turn-out

Parameter	Average	Maximum	Minimum
pH	8.0	9.4	7.1
Temperature (°F)	11.1	18.1	3.2
Free Chlorine Residual (mg/L)	1.11	2.17	0.11

Although the free chlorine residual at the Covington Turn-out varied between 0.11 and 2.17 mg/L, the free chlorine residual appeared to be stable overall. The 10th and 90th percentiles of the free chlorine residual were 0.92 and 1.28 mg/L for the daily average data. These free chlorine residuals are generally higher than that of the District's system water, and as such, may tend to increase residuals within the system and provide a slight benefit by increasing the residual in some areas of the system.

Corrosion Control

The District's production wells were found to have pH levels of 7.6 to 8.2, and therefore, corrosion control treatment, such as pH adjustment, has not been necessary for Lead and Copper Rule (LCR) compliance.

Orthophosphate is not added at either the District's wells (or at the GRFF) and naturally occurring levels of orthophosphate are not expected to have a meaningful effect on lead or copper corrosion. The District's most recent LCR sampling results indicate that the system is well within compliance. The 90th percentile copper was 0.22 mg/L, compared to the regulatory Action Level of 1.3 mg/L. The 90th percentile lead was reported to be 0.002 mg/L, compared to the regulatory Action Level of 0.015 mg/L.

Since the GRFF water has a slightly higher pH than the District's existing distribution system water, it may be expected to increase the pH of the blended water in the distribution system. However, because the well waters have a much higher alkalinity and pH buffering capacity, the well waters tend to control the pH of most blends.

Three pH levels were selected for blending with GRFF water: 8.2 (representative of Wells #6 and #9); 7.6 (representative of Wells #3 and #5); and 7.3 (representative of Auburn water). Water quality data for these locations used in this blending analysis are presented in Table 5. Starting January 2017, the District will only be purchasing Auburn water for emergency use, therefore, the first two blending scenarios are of primary concern and the blends with Auburn water are presented for comparison.

Table 5: Water Quality Parameters used for Blending Analysis

Parameter	GRFF	District Well Water		
		Wells #6 and #9	Wells #3 and #5	Auburn Water
Temperature (°C)	12	12	12	12
pH	8.0	8.2	7.6	7.3
Alkalinity (mg/L as $CaCO_3$)	20	107	101	99
TDS (mg/L)	55	161	189	138

The Tetra Tech (RTW) Model - Blending Water Module was used to determine the pH of each blend considered (Figure 1). For Wells #6 and #9, all of the blends have a pH between 8.0 and 8.2, as expected. This range of pH is suitable for corrosion control and is expected to maintain stable scales within the distribution system. For Wells #3 and #5, all of the blends with up to 75% GRFF water had a pH between 7.6 and 7.7. Blends with greater than 75% GRFF water are expected to have a pH between 7.8 and 8.0.

For the Auburn water scenario, all blends of up to 75% GRFF water would have a pH below 7.5. Only blends of GRFF water and Auburn water had pH values below 7.5 in this analysis. Since the District will essentially discontinue purchasing water from Auburn once it begins receiving the GRFF water, the blends of GRFF water and the District's well waters are the relevant blends to be considered. These blends are anticipated to have a pH of at least 7.6 and a narrower range of pH is anticipated in the distribution system. Blending the District's well waters with GRFF water is thus expected to improve corrosion control by avoiding pH excursions below 7.5 and also reducing pH variations in the system of greater than 0.5 pH units, improving scale stability.

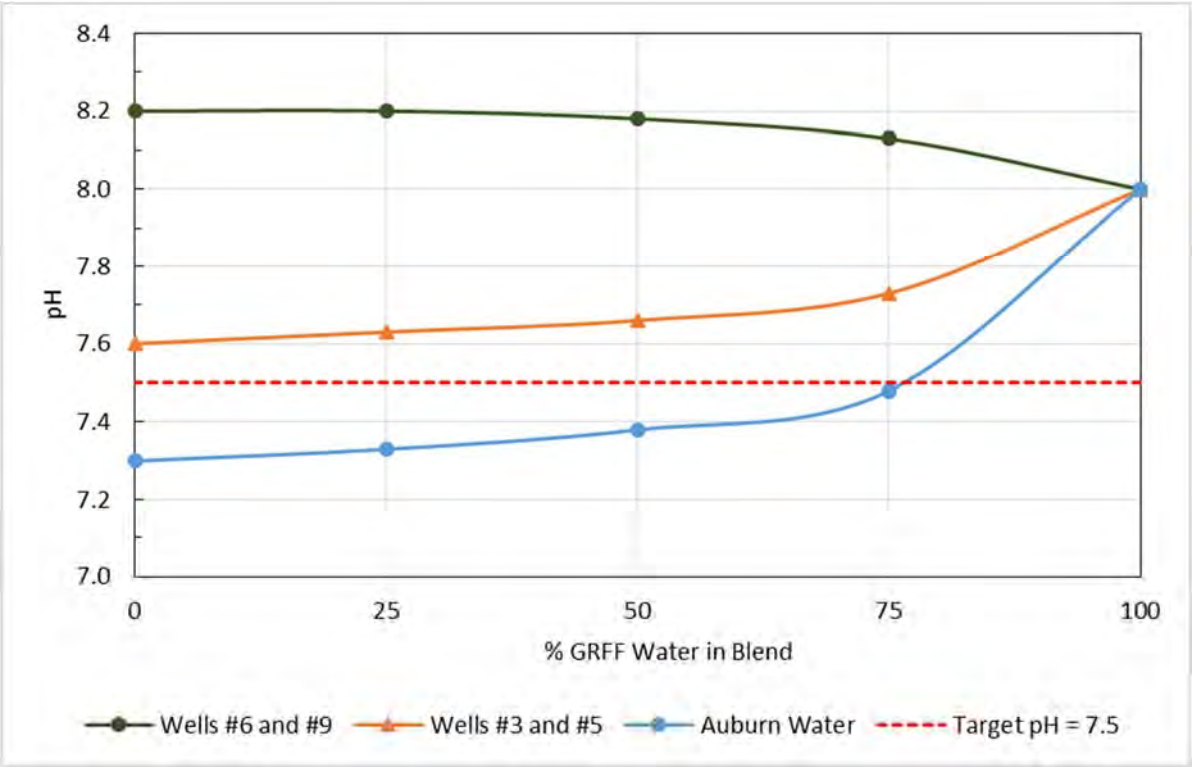

Figure 1. Calculated pH for a Range of Blends with GRFF Water

This blending analysis illustrates that the well water with its much higher alkalinity and greater pH buffering capacity tends to control the pH of most blends. The higher pH of the GRFF water would increase the pH only of blends for which the vast majority of the water is from GRFF (*i.e.* greater than approximately 75% GRFF water).

With regard to alkalinity, it should be maintained at greater than 20 to 25 mg/L as $CaCO_3$, especially for surface water supplies in order to provide adequate pH buffering capacity and to maintain consistent pH as the water ages in the distribution system. All blends are expected to have an adequate alkalinity to meet this guideline.

Disinfection By-products

Trihalomethane data for the District's distribution system for 2014 are presented in Figure 2. Total trihalomethanes ranged from 1.1 to 43 µg/L, and all results were well below the maximum contaminant level (MCL) of 80 µg/L. The sum of five haloacetic acids, another regulated disinfection by-product group, were even lower, ranging from 4.0 to 23.4 µg/L in 2014. The District has historically not had an issue with respect to compliance with disinfection by-products.

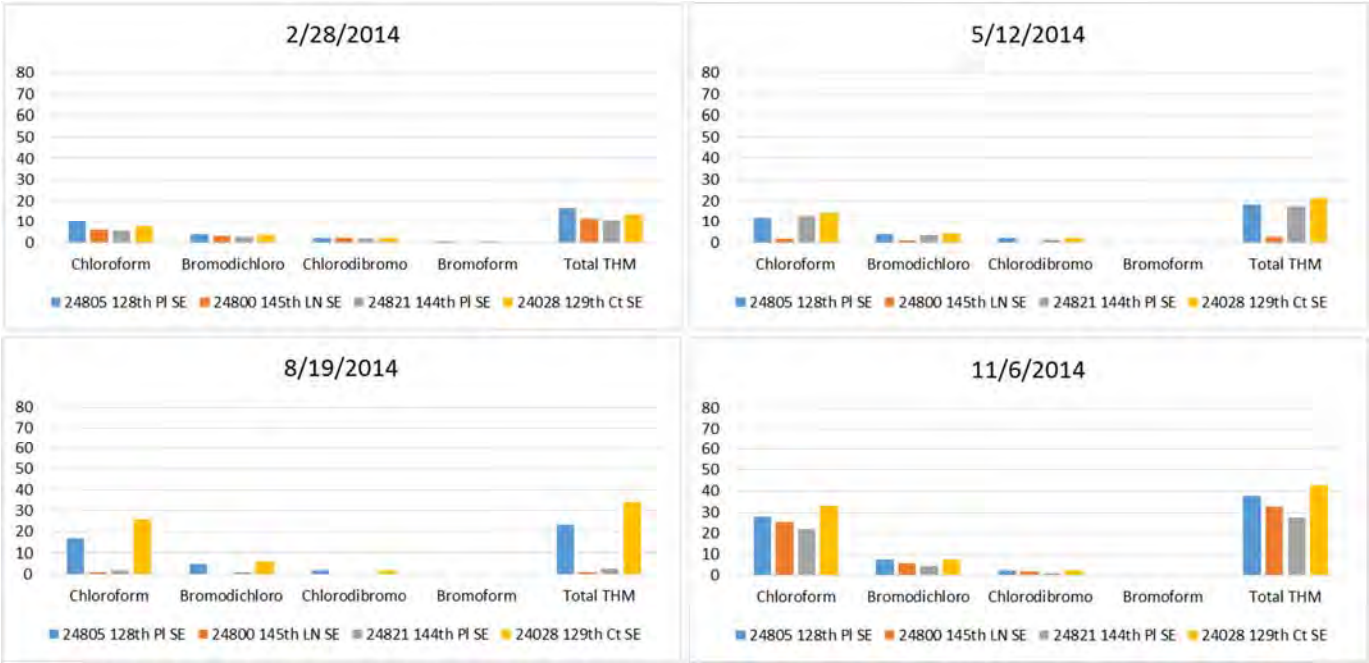

Figure 2. District 2014 Total Trihalomethane Data

Table 6 presents disinfection by-product data for the year 2015 for the City of Tacoma distribution system and at the Covington Turn-out. Levels of Total THMs and HAA5 within the City of Tacoma system were generally somewhat lower than that of the District's distribution system, despite the higher TOC of the treated GRFF water compared to the District's existing supplies. Disinfection by-product levels at the Covington Turn-out were exceedingly low in 2015 and are therefore not anticipated to cause issues with respect to compliance with the Stage 2 Disinfection By-Product Rule for the District.

Table 6. Disinfection By-Product Data Comparison

Disinfection By-Product	District 2014	Covington Turn-out 2015	Tacoma Distribution System 2015
TTHMs (ppb)	Max: 43 Min: 1.1	Max: 7.6 Min: 3.6	Max: 24 Min: ND
HAA5 (ppb)	Max: 32 Min: 1.9	Max: 4.5 Min: 1.5	Max: 16 Min: ND

Regulated and Unregulated Contaminants

Regulated contaminants, including herbicides, pesticides, carbamates, volatile organic chemicals, and synthetic organic chemicals have not been detected in the District's system.

Per the Tacoma Water 2014 CCR, the following regulated chemicals were detected:

- Ethyl Benzene (MCL: 700 ppb, Highest level detected: 0.82 ppb)
- Total Xylenes (MCL: 10 ppm, Highest level detected: 0.0055 ppm)
- Trichloroethylene (MCL: 5 ppb, Highest level detected: 1.7 ppb)
- Radium-228 (MCL: 5 pCi/L, Highest level detected: 1.3 +/- 0.3 pCi/L)

Sampling under the Unregulated Contaminant Monitoring Rule (UCMR3) by Tacoma Water included the following detections:

- Chloroform (0 – 1.16 ppb)
- Chlorate (24 ppb)
- Chromium (0.3 ppb)
- Chromium-6 (0.26 ppb)
- Strontium (120 ppb)
- Vanadium (2.9 ppb).

For Auburn water, a review of the CCRs for 2012, 2013, and 2014 showed that no regulated volatile or synthetic organic chemicals were detected in their system. Sampling under the UCMR3 included the following detections:

- Vanadium (0.53-4.0 ppb)
- Strontium (11-110 ppb)
- Chromium (0.21 – 0.55 ppb)
- Chromium-6 (0.05 – 0.46 ppb)
- Chlorate (25 – 100 ppb)
- Testosterone (0.00053 ppb).

There is no indication that blending of water from Tacoma Water within the District's distribution system would result in any concerns with respect to detections of regulated contaminants. The detections that have occurred under the UCMR3 are not of a present regulatory concern, but it is recommended to continue to monitor these data as they are collected and to track potential future regulatory action.

Scale Stability

The GRFF water is largely surface water with a higher level of ORP and lower mineral content compared to the well water supplies operated by the District. These differences in water quality can be of concern with respect to scale stability. Swings in pH of more than 0.5 units and changes in ORP are of concern with respect to scale stability, and should be avoided to the extent possible.

The District should seek to maintain free chlorine residuals at a sufficient level such that the ORP is as similar as possible to that of the GRFF supply. A minimum free chlorine residual of 0.5 mg/L is suggested to avoid destabilizing existing scales due to changes in ORP as the blend ratio shifts as a function of distribution system location and time. Unlined cast iron pipe is of particular concern with respect to changes in ORP. Very low or negative ORP levels can cause the release of soluble metals from the inner pipe wall of unlined cast iron pipe which exert a significant chlorine demand making re-establishing a stable free chlorine residual and positive ORP conditions difficult. This is of less concern for the District since their system contains very little unlined cast iron pipe.

The District's well supplies are similar to that of the GRFF water with respect to pH. Blends of the District's well waters and GRFF water are anticipated to have a pH of at least 7.6 and a narrower range of pH is anticipated in the distribution system, compared to the current practice of blending with Auburn water. Blending the District's well waters with GRFF water is expected to improve corrosion control by avoiding pH excursions below 7.5 and also reducing pH variations in the system of greater than 0.5 pH units, improving scale stability.

Fluoride

Fluoride in the District's system has varied from 0.88 to 0.92 mg/L. The target level of fluoride in the GRFF treated water is 0.7 mg/L. Although the GRFF water may result in a small dilution of the level of fluoride in the District's system, it is likely not of concern.

Aesthetic Considerations

The RTW Blend Model was used to calculate the following water quality indices:

- **Langelier Saturation Index (LSI)** – This index provides a measure of stability of water with respect to its degree of calcium carbonate saturation. A negative LSI indicates a water that is not saturated with calcium carbonate and is potentially corrosive toward calcium carbonate scales. A positive LSI indicates a water which is saturated and may tend to deposit calcium carbonate within the distribution system and home plumbing.
- **Calcium Carbonate Precipitation Potential (CCPP)** – This is the theoretical quantity of calcium carbonate which may precipitate, based on water chemistry considerations. If formation of a calcium carbonate deposit is desirable for corrosion control purposes, a CCPP of 4 – 10 mg/L is suggested.

These indices are of concern with respect to corrosion within the distribution system and home plumbing and also the deposition of water spots which some customers may find objectionable. Table 7 presents the calculated value of these indices for the sources of supply under consideration for this blending study. All sources are under-saturated with respect to calcium carbonate and therefore deposition of calcium carbonate scale is not anticipated. White water spots may still be formed due to evaporation of any water which contains dissolved calcium carbonate. To the extent that hard water spots are an issue with existing water quality, the GRFF water will tend to alleviate that issue due to its lower mineral content. The GRFF water is slightly more aggressive than the District's existing supplies, although this is likely not of concern. The Auburn water had the lowest CCPP and blending Auburn and the District's supplies has not been found to be problematic with respect to corrosion control or scale instability in the past.

Table 7: Water Quality Indices for Water Supplies

Index	District Well Supplies	GRFF	Auburn
LSI	-0.14	-0.94	-0.79
CCPP	-1.8	-2.3	-18

Iron and Manganese

As would be expected with a surface water supply, iron levels are lower in the GRFF water than those observed within the distribution system. The GRFF water has a slightly higher level of manganese than the treated well water supplies operated by the District. This is unusual for a surface water supply, although the manganese levels are not anticipated to be problematic with respect to aesthetic issues such as colored water.

A longer term concern is that manganese can accumulate within the distribution system and heavy metals can sorb to the manganese scales causing localized areas enriched with these metals. The District has recently completed swabbing of its system and, as such, much of any accumulated manganese scales have likely been removed and accumulation of manganese scales rich in heavy metals is therefore of less concern.

Operational Considerations

The GRFF is expected to be used to meet a significant portion of the District's drinking water demand, associated changes in hydraulic conditions are of concern. Adding a significant new supply to a system can result in changes to distribution system hydraulics, resulting in water age concerns and flow reversals. To the extent that water age increases, water quality degradation may occur including lower than desired levels of chlorine residuals and Total Coliform Rule compliance issues. The District maintains a reasonable disinfectant residual throughout its system. The District may need to reconsider monitoring locations to determine whether the new source of supply results in water age issues in different areas of the system compared to before the introduction of the water from Tacoma Water.

Changes in hydraulics and flow reversals are of concern with respect to stirring up solids within the system resulting in colored water problems. To the extent that this new supply changes hydraulic conditions within the system, flushing is recommended to remove existing solids. The District has a unidirectional flushing program in place. Implementation of flushing to prepare the system for the water from Tacoma water is recommended.

Conclusions and Recommendations

Regulatory Considerations

No significant regulatory concerns were identified with respect to blending water from Tacoma water within the District's distribution system. The GRFF water at the Covington Turn-out has been shown to have an adequate free chlorine residual and reasonably consistent pH and is therefore suitable for blending. Furthermore, very low levels of regulated disinfection by-products were found in the GRFF water at the Covington Turn-out. Other findings with respect to drinking water regulations include:

- Only blends of GRFF water and Auburn water had pH values below 7.5. Since the District will essentially discontinue purchasing water from Auburn once it begins receiving the GRFF water, the occurrence of pH levels below 7.5 in the system will likely be of less concern. Blends of the District's well waters and GRFF water are anticipated to have a pH of at least 7.6 and thus a narrower range of pH is anticipated in the distribution system. Blending the District's well waters with GRFF water is thus expected to improve corrosion control by avoiding pH excursions below 7.5 and also reducing pH variations in the system, improving scale stability.
- Tacoma Water has reported detections of several contaminants monitored under the UCMR3. The regulatory process should be tracked over time to determine if any of the detections would be of concern with respect to a future MCL for any of these currently unregulated contaminants.

Aesthetic Issues

No significant aesthetic issues were identified with respect to blending of water from Tacoma water within the District's distribution system. The Tacoma water appears to be under-saturated with respect to calcium carbonate precipitation and is similar to the District's other sources of supply in that regard. The treated GRFF water appears to have a slightly elevated level of manganese. It is unusual for surface water supplies to contain a significant level of manganese although manganese levels in the District's system are not anticipated to be problematic with respect to colored water. The District has performed swabbing and has a UDF plan in place. The District should consider performing repeat swabbing at selected areas of the system to remove any accumulated manganese scales every few years.

Operational Considerations

To the extent that introduction of the new source of supply causes flow reversals, change in velocities, or other changes to hydraulic conditions within the system, there will be a tendency to stir up solids potentially resulting in episodic colored water problems. The District has already mitigated such potential problems by recently performing swabbing of their system. Performing UDF is recommended to help remove any existing solids and minimize the impact of disruptions to existing hydraulic conditions.

Recommended Water Quality Monitoring

Field monitoring is recommended to assess any changes in water quality as the GRFF water is introduced into the District's system. The water quality sampling is anticipated to occur prior to and following initial introduction of GRFF water into the system. A proposed water quality monitoring plan will be submitted as a separate document.

Appendix S

Calibration

THIS PAGE INTENTIONALLY BLANK.

MEMORANDUM

Date: August 18, 2017

To: Chris Hall, Vern Allemand

From: Dave Harms, Ron Dorn

Subject: WD 111 Water System Plan Update
Hydrant Flow Testing for Hydraulic Model Calibration

Introduction:

This memorandum summarizes the field hydrant flow tests necessary to perform calibration of the hydraulic model. Periodic calibration of the model is recommended to verify/update the accuracy of the computer model. Department of Health (DOH) requested a model calibration update as part of the hydraulic analysis for this Water System Plan.

The intent of the hydrant flow tests is to identify Hazen-Williams roughness coefficients, or 'C' values, for the different pipe materials that comprise the District's distribution system. The 'C' value is an indication of pipe wall roughness and varies based on pipe material and age. Adjusting 'C' values is the primary method used to calibrate the computer model, although other factors can affect the ability of the model to accurately simulate flow and pressure in the distribution system, including:

- Magnitude and distribution of system demands
- Facility and model node elevations
- Minor losses
- Pump discharge flow and pressure
- Pressure Reducing Station settings
- Anomalies such as partially closed valves

Collection of Hydrant Flow Data:

Hydrant flow tests were conducted at five locations in the distribution system. These test locations are labeled as 'A' through 'E' on the attached graphics. The test locations are intended to provide calibration data for the cast iron (CI), asbestos cement (AC) and ductile iron (DI) pipe that make up the distribution system piping. An important goal in identifying and performing hydrant flow tests also is the ability to achieve a pressure drop of at least 10 psi. Inaccuracies in field data collection are often on the order of several psi. At pressure drops less than 10 psi, these inaccuracies become a significant portion of the overall pressure drop, decreasing the ability to calibrate the model. Preliminary model simulations were performed to identify test locations with the potential for larger pressure drops. Supply sources were also investigated in the model, to weigh the benefits of achieving larger drops in system pressure against the potential disadvantages of shutting supply sources off during hydrant flow testing.

Hydrant testing and associated data collection was performed with the following sequence of general tasks:

- Define candidate field hydrant flow test locations, including recommendations for operational settings and preparation of working maps for each test. Identify hydrants for flow and pressure monitoring
- Collect data using standard pitot gauge equipment. Record system pressure drops corresponding to hydrant flow for each test, using pressure gauges installed on hydrants adjacent to those where flow was measured (at locations identified on the attached figures)
- Obtain District telemetry data for the period covering the hydrant flow tests. Adjust model representation to match operational settings

A detailed list of hydrant flow testing procedures is attached for reference.

Calibration Results:

Model runs were performed in an iterative manner, adjusting 'C' values separately for cast iron, asbestos cement and ductile iron pipe materials until simulated pressure results matched measured pressure results, as summarized in the table, below. Model calibration resulted in identification of the following 'C' values for the three pipe materials:

- AC = 123
- CI = 140
- DI = 145

A small number of pipes with unknown materials were assigned a 'C' value of 140.

Field vs Model Hydrant Test Comparison - Original 'C' Values

Hydrant Flow Test Location[1]	Pressure Zone	Field Static/Dynamic[2] Pressure (psi)	Field Pressure Drop (psi)	Model Static/Dynamic[2] Pressure (psi)	Model Pressure Drop (psi)	Variance (Model-Field)
A	594	(1) 77/65	12	73.86/59.56	14.3	2.3
		(2) 78/69	9	77.32/66.56	10.8	1.8
B	594	(1) 59/48	11	58.56/46.87	11.7	0.7
		(2) 50/42	8	48.59/39.45	9.1	1.1
C	594	(1) 74.5/52	22.5	67.01/44.40	22.6	0.1
		(2) 52/47	5	46.65/41.91	4.7	-0.3
D	594	(1) 109/94	15	106.88/89.51	17.4	2.4
		(2) 107.5/96	11.5	106.01/92.53	13.5	2.0
E	594	(1) 45/35	10	43.32/30.36	13.0	3.0
		(2) 57/48	9	58.08/46.31	11.8	2.8

1: Test location letters correspond to letters indicated on the attached figures

2: Static – prior to hydrant flow test/Dynamic – during hydrant flow test

Attachments:

- Figure 1 – Hydrant Flow Test Locations (system-wide)
- Figure 2 – Hydrant Flow Test Location ‘A’
- Figure 3 – Hydrant Flow Test Location ‘B’
- Figure 4 – Hydrant Flow Test Location ‘C’
- Figure 5 – Hydrant Flow Test Location ‘D’
- Figure 6 – Hydrant Flow Test Location ‘E’
- Hydrant Flow Testing Sequence

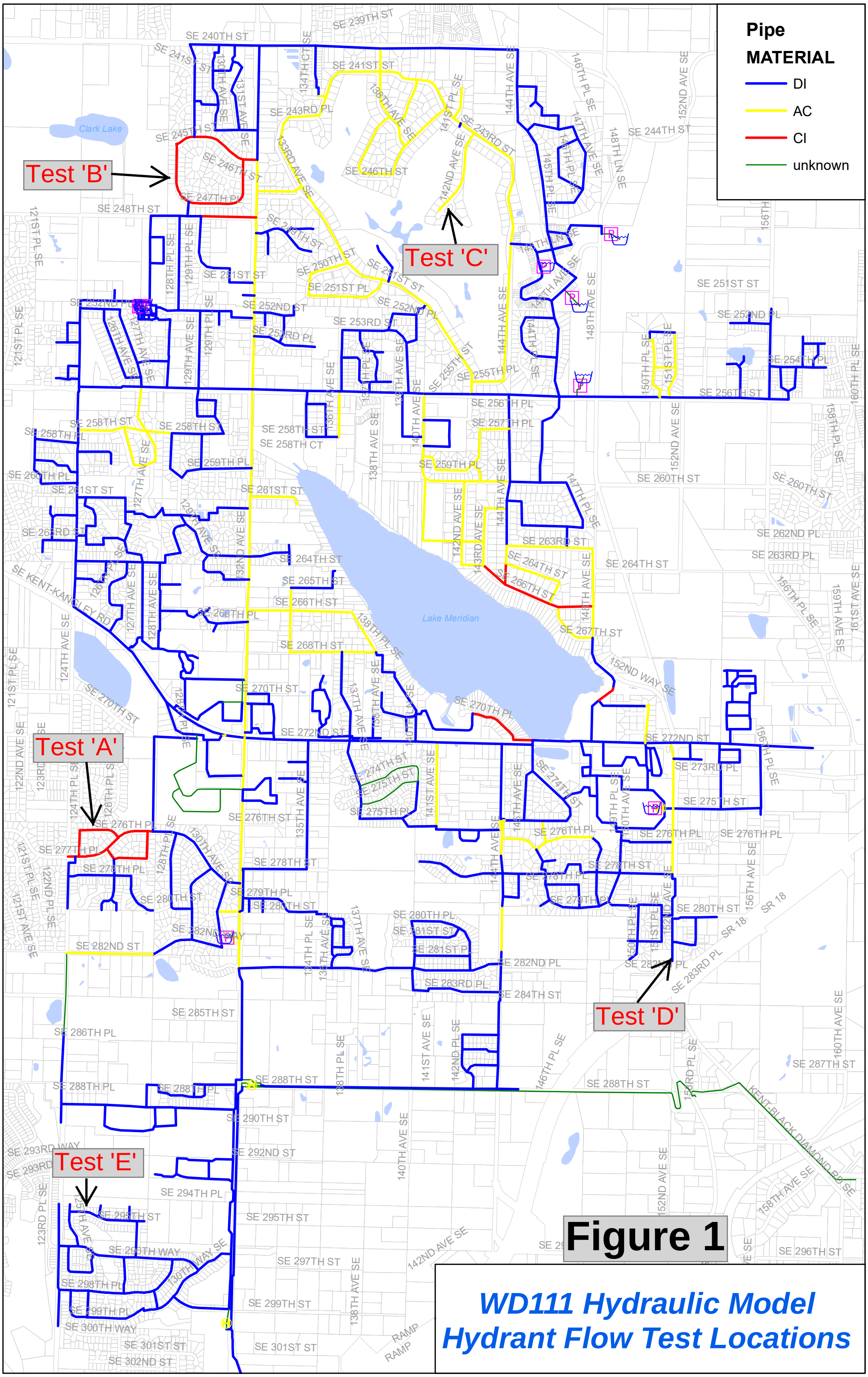
Pipe
MATERIAL
DI
AC
CI
unknown
Test 'A'
Test 'B'
Test 'C'
Test 'D'
Test 'E'
Clark Lake
Lake Meridian
SE 240TH ST
SE 241ST ST
SE 239TH ST
SE 243RD PL
SE 245TH ST
SE 246TH ST
SE 247TH PL
SE 248TH ST
SE 249TH ST
SE 250TH ST
SE 251ST ST
SE 251ST PL
SE 252ND ST
SE 252ND PL
SE 253RD ST
SE 252RD PL
SE 255TH ST
SE 255TH PL
SE 256TH PL
SE 256TH ST
SE 257TH PL
SE 258TH ST
SE 258TH PL
SE 258TH CT
SE 259TH PL
SE 260TH PL
SE 260TH ST
SE 261ST ST
SE 262ND PL
SE 263RD ST
SE 263RD PL
SE 264TH ST
SE 265TH ST
SE 266TH ST
SE 266TH PL
SE 267TH ST
SE 268TH ST
SE 270TH ST
SE 270TH PL
SE 272ND ST
SE 273RD PL
SE 274TH ST
SE 275TH ST
SE 275TH PL
SE 276TH ST
SE 276TH PL
SE 277TH PL
SE 278TH ST
SE 278TH PL
SE 279TH PL
SE 280TH ST
SE 280TH PL
SE 281ST ST
SE 281ST PL
SE 282ND ST
SE 282ND PL
SE 283RD PL
SE 284TH ST
SE 285TH ST
SE 286TH PL
SE 287TH ST
SE 288TH ST
SE 288TH PL
SE 290TH ST
SE 292ND ST
SE 293RD WAY
SE 294TH PL
SE 295TH ST
SE 296TH WAY
SE 297TH ST
SE 298TH PL
SE 299TH ST
SE 299TH PL
SE 300TH WAY
SE 301ST ST
SE 302ND ST
SE KENT-KANGLEY RD
SE KENT-BLACK DIAMOND RD
152ND WAY SE
SR 18
Figure 1
WD111 Hydraulic Model
Hydrant Flow Test Locations

WD111 Hydraulic Model
Hydrant Flow Test Location 'A'

Figure 2

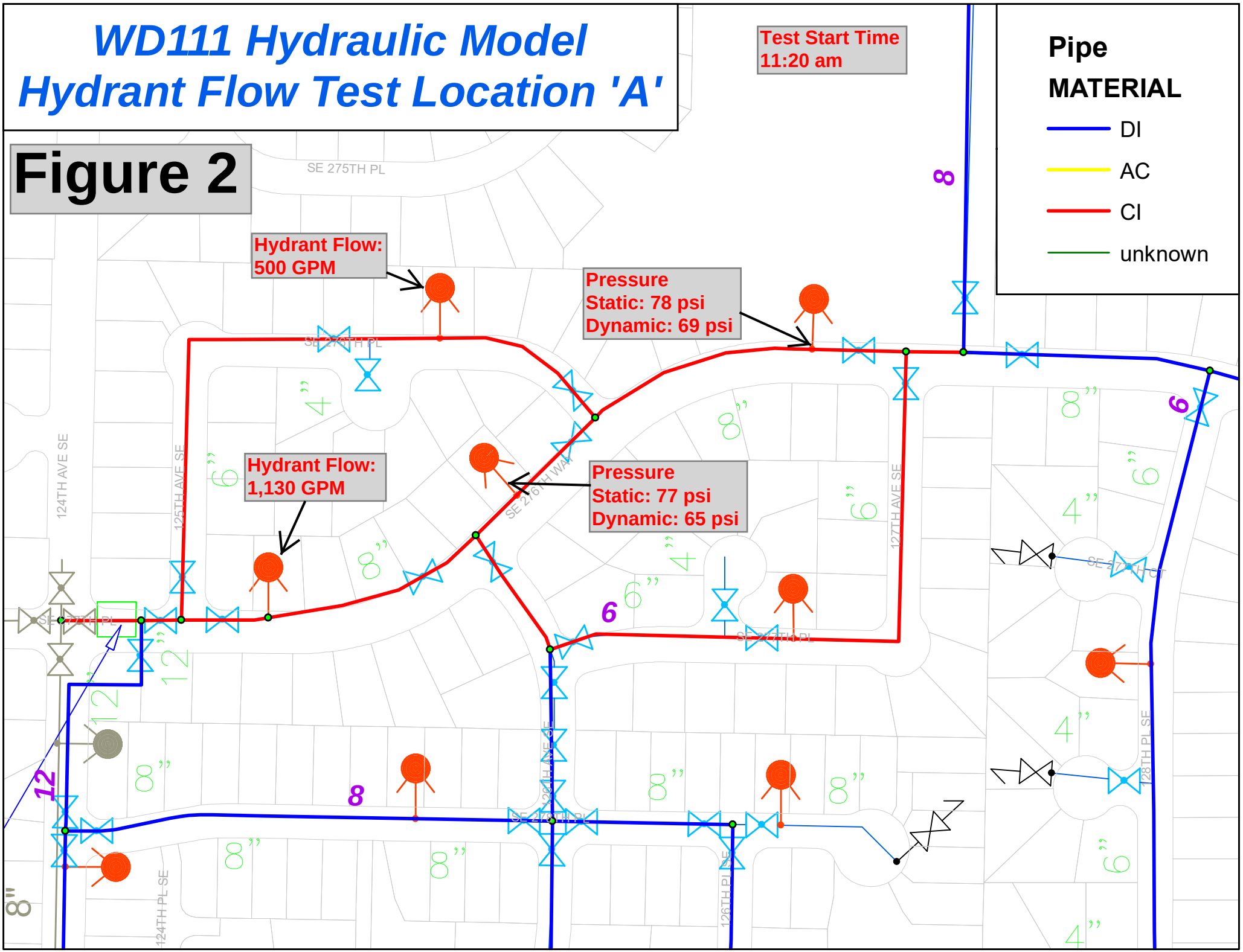

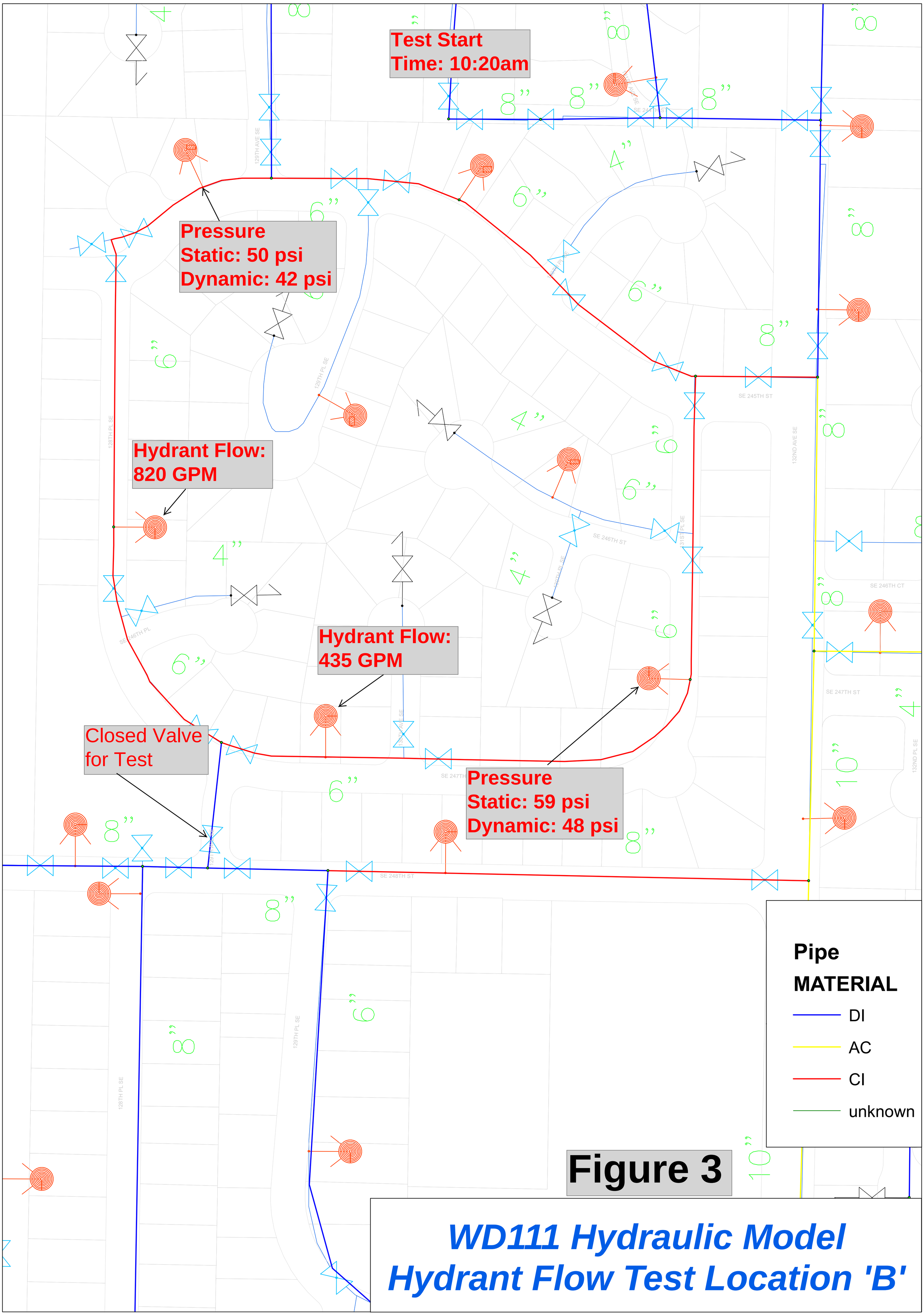
Test Start
Time: 10:20am
Pressure
Static: 50 psi
Dynamic: 42 psi
Hydrant Flow:
820 GPM
Hydrant Flow:
435 GPM
Closed Valve
for Test
Pressure
Static: 59 psi
Dynamic: 48 psi
Pipe
MATERIAL
DI
AC
CI
unknown
Figure 3
WD111 Hydraulic Model
Hydrant Flow Test Location 'B'

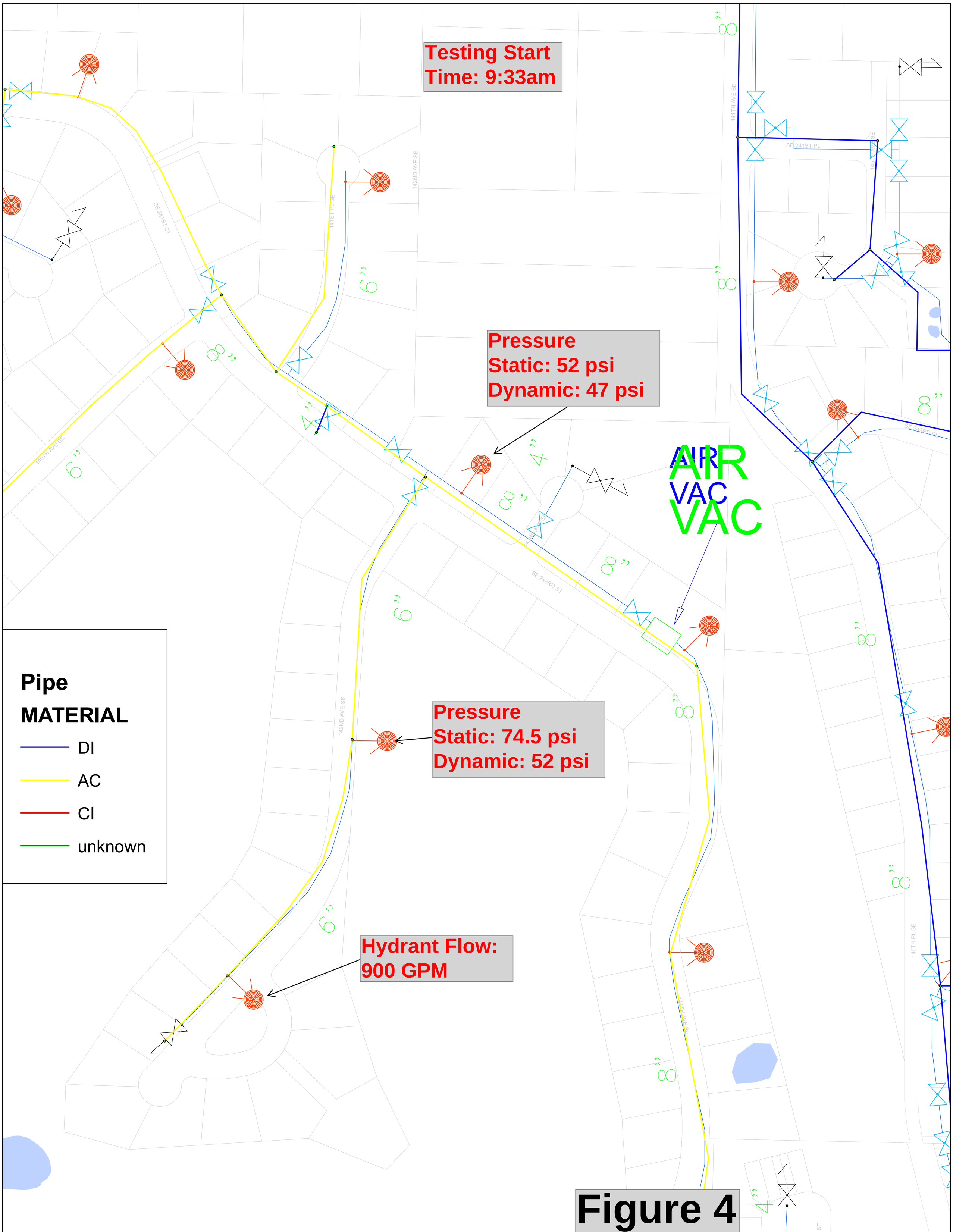

Figure 4

WD111 Hydraulic Model
Hydrant Flow Test Location 'C'

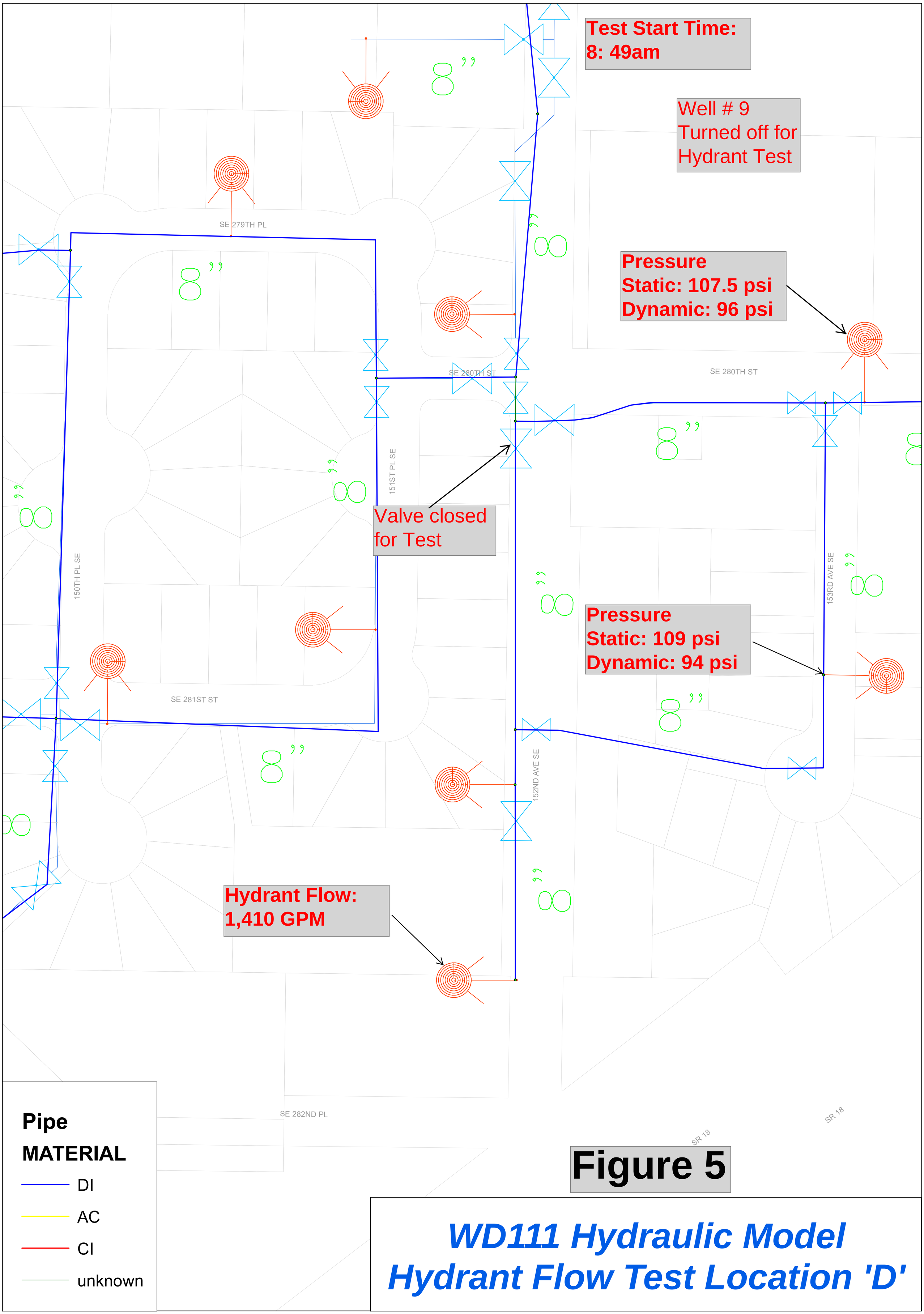

Figure 5

WD111 Hydraulic Model
Hydrant Flow Test Location 'D'

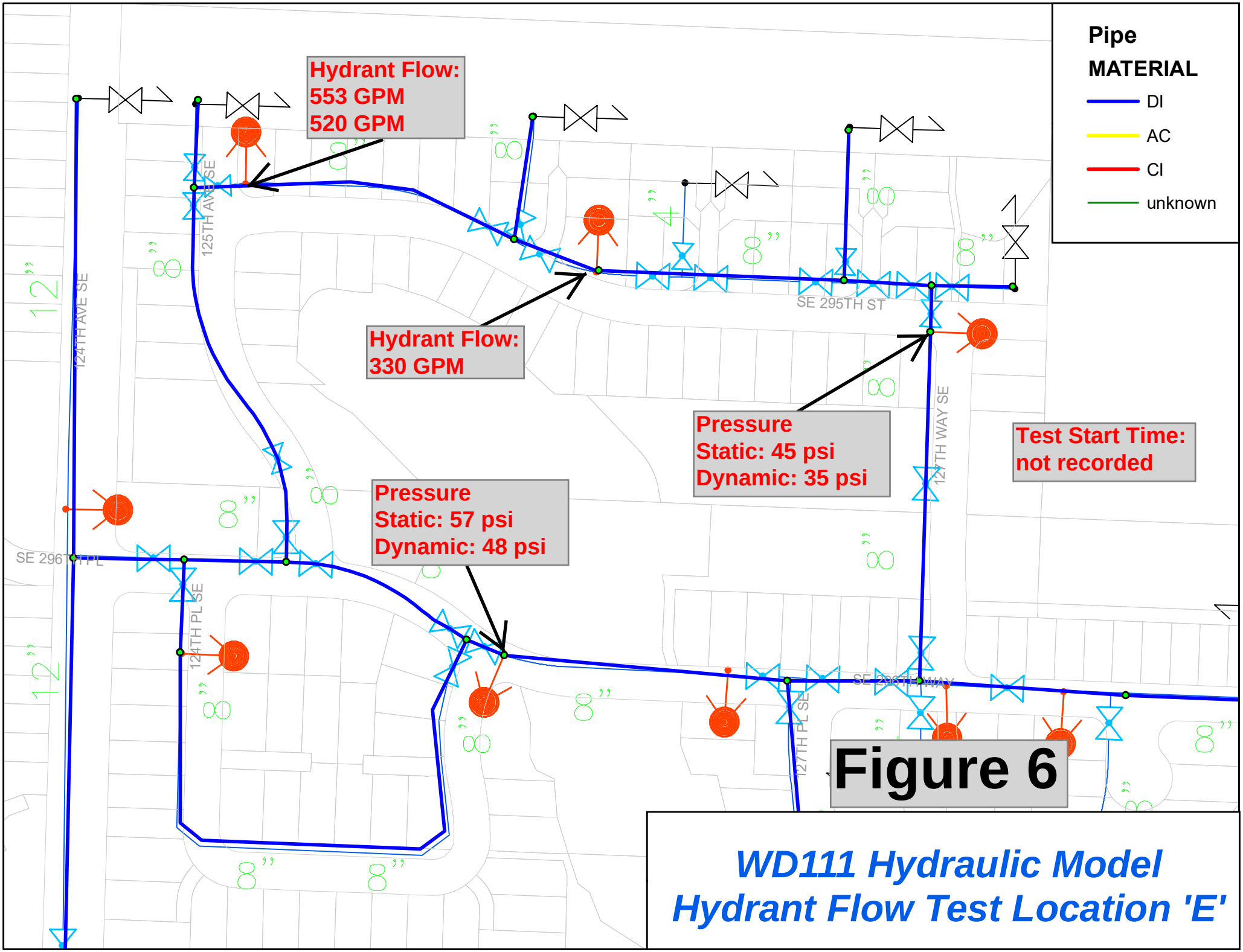

Figure 6

WD111 Hydraulic Model
Hydrant Flow Test Location 'E'

Hydrant flow test chronological sequence of activities:

Activities prior to hydrant testing:

1. Obtain and verify working condition and calibration of testing equipment.
    a. Flow diffusers – verify any applicable hydrant exit factor to apply to pitot
    b. Pressure gages
    c. Communication devices
2. Identify/assign staff to specific duties during testing. Distribute contact names/numbers of responsible staff, including staff requiring notification of the testing/schedule and potential pressure and W/Q impacts of the hydrant tests
3. Visit location of each field station (hydrant flow, pressure monitoring, etc) to familiarize with locations, required procedures and potential limitations
4. Define specific sequence of pumping operations, identifying (& setting up, if needed) pressure monitoring, pump ramp up & down process & approximate duration
5. Define water dechlorination/disposal procedures
6. Define post test water quality flushing plan. Identify & inspect candidate locations/hydrants to perform W/Q flushing
7. Identify incident response personnel/procedures

Hydrant test sequence:

1. Staff the hydrant testing stations, setup equipment & check in on radios.
    a. Purge any air in the hydrant the pressure gages are attached to
    b. Do the hydrants have ground (foot) valves? General hydrant flow procedure:
        i. Close the ground valve
        ii. Open the hydrant
        iii. Install equipment
        iv. Slowly open the ground valve to start the test
        v. Slowly close the ground valve to stop the test
        vi. Remove monitoring equipment
        vii. Slowly reopen the ground valve at lower rate for water quality flushing
        viii. Close the ground valve
        ix. Close the hydrant
        x. Open the ground valve
2. Verify any changes to operational conditions are completed.
3. Record static pressure readings at pressure monitoring stations and at pump station. Record pump status (i.e. which pump(s) are operating) and master flow meter rates. Record storage tank water levels. Note time.
4. Slowly open hydrant(s)

5. Allow hydrant flow and monitored pressure to stabilize. Record flow and pressure at all stations. Record master flow meter rates. Record reservoir water level. Note time.
6. Monitoring stations check in on radios to verify stable flow, tank levels and pressure readings have been recorded
7. Slowly close the hydrant(s) that were opened, allowing a small water quality flushing flow to continue.

Post testing activities:

1. Continue water quality flushing
2. Continue to assess and manage water system.
3. Notify appropriate staff of hydrant testing completion and system status

Appendix T

Lake Meridian Water District Water Rate Model

THIS PAGE INTENTIONALLY BLANK.

Lake Meridian Water District
Water Rate Study
Assumptions

Economic & Financial Factors	2020	2021	2022	2023	2024	2025	2026	2027	2028	2029	2030	2031
General Cost Inflation	3.00%	3.00%	3.00%	3.00%	3.00%	3.00%	3.00%	3.00%	3.00%	3.00%	3.00%	3.00%
Construction Cost Inflation	3.00%	3.00%	3.00%	3.00%	3.00%	3.00%	3.00%	3.00%	3.00%	3.00%	3.00%	3.00%
Labor Cost Inflation	4.00%	4.00%	4.00%	4.00%	4.00%	4.00%	4.00%	4.00%	4.00%	4.00%	4.00%	4.00%
Benefit Cost Inflation	4.00%	4.00%	4.00%	4.00%	4.00%	4.00%	4.00%	4.00%	4.00%	4.00%	4.00%	4.00%
General Inflation plus Composite Growth	3.52%	3.49%	3.49%	3.49%	3.48%	3.48%	3.48%	3.48%	3.48%	3.47%	3.47%	3.47%
Customer Growth	0.50%	0.48%	0.47%	0.47%	0.47%	0.47%	0.47%	0.46%	0.46%	0.46%	0.46%	0.46%
Demand Growth	0.50%	0.48%	0.47%	0.47%	0.47%	0.47%	0.47%	0.46%	0.46%	0.46%	0.46%	0.46%
General Inflation plus Demand Growth	3.52%	3.49%	3.49%	3.49%	3.48%	3.48%	3.48%	3.48%	3.48%	3.47%	3.47%	3.47%
General Inflation plus Customer Growth	3.52%	3.49%	3.49%	3.49%	3.48%	3.48%	3.48%	3.48%	3.48%	3.47%	3.47%	3.47%
Water Supply Costs	3.52%	3.49%	3.49%	3.49%	3.48%	3.48%	3.48%	3.48%	3.48%	3.47%	3.47%	3.47%
No Escalation	0.00%	0.00%	0.00%	0.00%	0.00%	0.00%	0.00%	0.00%	0.00%	0.00%	0.00%	0.00%
Investment Interest	0.50%	0.50%	0.50%	0.50%	0.50%	0.75%	1.00%	1.25%	1.25%	1.25%	1.25%	1.25%
City of Kent Franchise Fee	6.30%	6.30%	6.30%	6.30%	6.30%	6.30%	6.30%	6.30%	6.30%	6.30%	6.30%	6.30%
Excise Taxes	5.029%	5.029%	5.029%	5.029%	5.029%	5.029%	5.029%	5.029%	5.029%	5.029%	5.029%	5.029%
Excise Taxes & City of Kent Franchise Fee	11.3%	11.3%	11.3%	11.3%	11.3%	11.3%	11.3%	11.3%	11.3%	11.3%	11.3%	11.3%
Excise Taxes & Weighted City of Kent Franchise Fee	10.7%	10.7%	10.7%	10.7%	10.7%	10.7%	10.7%	10.7%	10.7%	10.7%	10.7%	10.7%
Tax Exempt	0.00%	0.00%	0.00%	0.00%	0.00%	0.00%	0.00%	0.00%	0.00%	0.00%	0.00%	0.00%
State B&O Tax	1.50%	1.50%	1.50%	1.50%	1.50%	1.50%	1.50%	1.50%	1.50%	1.50%	1.50%	1.50%
B&O Taxes (Below 1 Million in Revenue)	1.50%	1.50%	1.50%	1.50%	1.50%	1.50%	1.50%	1.50%	1.50%	1.50%	1.50%	1.50%
B&O Taxes (Above 1 Million in Revenue)	1.75%	1.75%	1.75%	1.75%	1.75%	1.75%	1.75%	1.75%	1.75%	1.75%	1.75%	1.75%

Accounting Assumptions		2020	2021	2022	2023	2024	2025	2026	2027	2028	2029	2030	2031
FISCAL POLICY RESTRICTIONS													
Min. Op. Fund Balance Target (days of O&M expense)		75 Days	75 Days	75 Days	75 Days	75 Days	75 Days	75 Days	75 Days	75 Days	75 Days	75 Days	75 Days
Max. Op. Fund Balance (days of O&M expense)		90 Days	90 Days	90 Days	90 Days	90 Days	90 Days	90 Days	90 Days	90 Days	90 Days	90 Days	90 Days
Minimum Capital Fund Balance Target													
Select Minimum Capital Fund Balance Target	1	Defined as % of Plant											
1 - Defined as % of Plant	Estimated Net Assets												
Plant-in-Service in 2019	$ 56,609,371	$ 56,609,371	$ 56,609,371	$ 58,260,768	$ 61,113,902	$ 67,646,833	$ 74,915,988	$ 77,652,958	$ 78,147,254	$ 78,523,838	$ 81,357,998	$ 81,888,240	$ 87,706,118
Minimum Capital Fund Balance - % of plant assets		1.00%	1.00%	1.00%	1.00%	1.00%	1.00%	1.00%	1.00%	1.00%	1.00%	1.00%	1.00%
2 - Amount at Right ==>													
RATE FUNDED SYSTEM REINVESTMENT													
Select Reinvestment Funding Strategy	3	User Input											
Amount of Annual Cash Funding from Rates													
1 - Equal to Annual Depreciation Expense		$ 1,308,696	$ 1,308,696	$ 1,363,044	$ 1,451,875	$ 1,610,654	$ 1,781,500	$ 1,854,945	$ 1,868,406	$ 1,886,759	$ 1,953,332	$ 1,978,091	$ 2,110,916
2 - Equal to Annual Depreciation Expense less Annual Debt Principal Payments		1,308,696	904,501	974,703	1,266,439	1,031,561	1,183,669	1,304,301	1,297,923	1,300,854	1,196,948	1,199,070	1,398,364
3 - Equal to Amount at Right ==>		$ 350,000	$ 350,000	$ 350,000	$ 350,000	$ 241,598	$ 267,225	$ 408,088	$ 411,049	$ 698,101	$ 722,733	$ 731,894	$ 844,366
4 - Do Not Fund System Reinvestment		27%	27%	26%	24%	15%	15%	22%	22%	37%	37%	37%	40%

Lake Meridian Water District
Water Rate Study
Assumptions

Capital Financing Assumptions		2020	2021	2022	2023	2024	2025	2026	2027	2028	2029	2030	2031
Capital Facilities Charge													
Current Capital Facilities Charge	$ 8,797	$ 8,797	$ 8,797	$ 8,797	$ 8,797	$ 8,797	$ 8,797	$ 8,797	$ 8,797	$ 8,797	$ 8,797	$ 8,797	$ 8,797
Total Meter Customer Equivalents		8,387	8,427	8,467	8,507	8,547	8,587	8,627	8,667	8,707	8,747	8,787	8,827
Additional Units Per Year		40	40	40	40	40	40	40	40	40	40	40	40
Capital Facilities Charge Revenue	1	Calculation											
1 - Total Capital Facilities Charge Revenue (Calculation)		$ 351,880	$ 351,880	$ 351,880	$ 351,880	$ 351,880	$ 351,880	$ 351,880	$ 351,880	$ 351,880	$ 351,880	$ 351,880	$ 351,880
2 - Total Capital Facilities Charge Revenue (Input)		$ 351,880	$ 351,880	$ 351,880	$ 351,880	$ 351,880	$ 351,880	$ 351,880	$ 351,880	$ 351,880	$ 351,880	$ 351,880	$ 351,880
FUNDING SOURCES													
Grants/Contributed													
[Extra]		$ -	$ -	$ -	$ -	$ -	$ -	$ -	$ -	$ -	$ -	$ -	$ -
[Extra]		-	-	-	-	-	-	-	-	-	-	-	-
Total		$ -	$ -	$ -	$ -	$ -	$ -	$ -	$ -	$ -	$ -	$ -	$ -
Additional Proceeds (Costs)													
Pre-Construction Loan Proceeds (Well #6)		$ -	$ 110,742	$ -	$ -	$ -	$ -	$ -	$ -	$ -	$ -	$ -	$ -
Construction Loan Proceeds (Well #6)		-	-	209,000	650,000	800,000	-	-	-	-	-	-	-
[Extra]		-	-	-	-	-	-	-	-	-	-	-	-
[Extra]		-	-	-	-	-	-	-	-	-	-	-	-
[Extra]		-	-	-	-	-	-	-	-	-	-	-	-
Total Additional Proceeds		$ -	$ 110,742	$ 209,000	$ 650,000	$ 800,000	$ -	$ -	$ -	$ -	$ -	$ -	$ -
REVENUE BONDS													
Term (years)		20 Years	20 Years	20 Years	20 Years	25 Years	25 Years	25 Years	25 Years	25 Years	25 Years	25 Years	25 Years
Interest Only Payments		0	0	0	0	0	0	0	0	0	0	0	0
Interest Rate		2.25%	2.25%	3.00%	3.00%	4.00%	4.00%	4.00%	4.00%	4.00%	4.00%	4.00%	4.00%
Issuance Cost		2.02%	2.02%	2.01%	2.02%	2.02%	2.02%	2.02%	2.02%	2.02%	2.02%	2.02%	2.02%
Revenue Bond Coverage Requirement													
Legal Requirements													
Multiple of Maximum Annual DS - Assessment Bonds	1.25												
Multiple of Maximum Annual DS - Non-Assessment Bonds	1.25												
District Policy Requirement													
Multiple of Annual Debt Service	1.25												
Use Reserves to Pay for Last Payment	No												
PWTF LOANS													
Term		20 Years	20 Years	20 Years	20 Years	20 Years	20 Years	20 Years	20 Years	20 Years	20 Years	20 Years	20 Years
Interest Rate		1.69%	1.69%	1.69%	1.69%	1.69%	1.69%	1.69%	1.69%	1.69%	1.69%	1.69%	1.69%
OTHER LOANS													
Term (years)		20 Years	20 Years	20 Years	20 Years	20 Years	20 Years	20 Years	20 Years	20 Years	20 Years	20 Years	20 Years
Interest Rate		5.00%	5.00%	5.00%	5.00%	5.00%	5.00%	5.00%	5.00%	5.00%	5.00%	5.00%	5.00%
Issuance Cost		1.50%	1.50%	1.50%	1.50%	1.50%	1.50%	1.50%	1.50%	1.50%	1.50%	1.50%	1.50%

Lake Meridian Water District
Water Rate Study
Operating Revenue and Expenditure Forecast

Revenues/Expenses		TAX BASIS	FORECAST BASIS	Preliminary Budget 2022	Forecast 2023	Forecast 2024	Forecast 2025	Forecast 2026	Forecast 2027	Forecast 2028	Forecast 2029	Forecast 2030	Forecast 2031
Acct. #	Rate Revenue												
461.0	Water Sales (Kent Residents)	Excise Taxes & City of Kent Franchise Fee	[Calculated]	$ 4,044,389	$ 4,091,655	$ 4,110,894	$ 4,130,132	$ 4,149,371	$ 4,168,610	$ 4,187,848	$ 4,207,087	$ 4,226,325	$ 4,245,564
	Water Sales (Covington and Auburn Residents)	Excise Taxes	[Calculated]	379,410	383,770	385,574	387,379	389,183	390,988	392,792	394,596	396,401	398,205
461.0	Leak & Credit Adj to Wtr Sales	Excise Taxes & City of Kent Franchise Fee	Customer Growth	(97,736)	(98,848)	(99,313)	(99,777)	(100,242)	(100,707)	(101,172)	(101,636)	(102,101)	(102,566)
464.0	Outside Water Sales	Excise Taxes	No Escalation	-	-	-	-	-	-	-	-	-	-
462.0	Irrigation WTR Sales (Kent Residents)	City of Kent Franchise Fee	[Calculated]	223,758	225,263	226,322	227,381	228,440	229,499	230,558	231,618	232,677	233,736
	Irrigation WTR Sales (Covington and Auburn Residents)	Tax Exempt	[Calculated]	50,286	50,614	50,852	51,090	51,328	51,566	51,804	52,042	52,280	52,518
	Total Water Sales			$ 4,600,107	$ 4,652,453	$ 4,674,329	$ 4,696,204	$ 4,718,080	$ 4,739,955	$ 4,761,831	$ 4,783,706	$ 4,805,582	$ 4,827,457
Non-Rate Revenue													
419.1/.2/.4	Interest on Maint and Adv Travel	Tax Exempt	[Calculated]	$ 35,804	11,678	11,735	22,724	30,653	40,135	41,395	41,917	45,777	45,938
417.0	Rental(s) House & RWA	Tax Exempt	No Escalation	-	-	-	-	-	-	-	-	-	-
461.1	Street Lights	State B&O Tax	[Calculated]	1,419	1,313	1,313	1,313	1,313	1,313	1,313	1,313	1,313	1,313
463.0	Kent Franchise Fee	Excise Taxes	[Calculated]	280,401	283,606	284,939	286,273	287,606	288,940	290,273	291,606	292,940	294,273
463.5	Backflow Program	State B&O Tax	Customer Growth	36,000	36,170	36,340	36,510	36,680	36,850	37,020	37,190	37,361	37,531
465.0	Misc. Revenue - Retail	State B&O Tax	Customer Growth	-	-	-	-	-	-	-	-	-	-
465.1	Misc. Revenue - Service	State B&O Tax	Customer Growth	15,000	15,071	15,142	15,213	15,283	15,354	15,425	15,496	15,567	15,638
465.2-300	Misc. Fees-WAL/DE Quote	State B&O Tax	No Escalation	10,500	10,500	10,500	10,500	10,500	10,500	10,500	10,500	10,500	10,500
466.0	D.E. Net Profit	State B&O Tax	No Escalation	5,000	5,000	5,000	5,000	5,000	5,000	5,000	5,000	5,000	5,000
467.0	Meter Rental Fees	State B&O Tax	No Escalation	1,200	1,200	1,200	1,200	1,200	1,200	1,200	1,200	1,200	1,200
470.0	Penalties, LC, S/O, Etc.	State B&O Tax	No Escalation	40,000	40,000	40,000	40,000	40,000	40,000	40,000	40,000	40,000	40,000
481.3	Meter Hang Fees	State B&O Tax	No Escalation	7,500	7,500	7,500	7,500	7,500	7,500	7,500	7,500	7,500	7,500
481.5	Frnt Ftage/Paybacks Collected	State B&O Tax	No Escalation	-	-	-	-	-	-	-	-	-	-
662.1	Cap Labor to offset expense Field	State B&O Tax	No Escalation	5,000	5,000	5,000	5,000	5,000	5,000	5,000	5,000	5,000	5,000
920.103	Cap Labor to offset expense Admin	State B&O Tax	No Escalation	5,000	5,000	5,000	5,000	5,000	5,000	5,000	5,000	5,000	5,000
	Total Non-rate revenues			$ 442,824	$ 422,037	$ 423,668	$ 436,232	$ 445,735	$ 456,792	$ 459,626	$ 461,722	$ 467,157	$ 468,892
TOTAL REVENUES				$ 5,042,930	$ 5,074,490	$ 5,097,997	$ 5,132,437	$ 5,163,815	$ 5,196,747	$ 5,221,457	$ 5,245,429	$ 5,272,738	$ 5,296,349

Lake Meridian Water District
Water Rate Study
Operating Revenue and Expenditure Forecast

Revenues/Expenses		FORECAST BASIS	Preliminary Budget 2022	Forecast 2023	Forecast 2024	Forecast 2025	Forecast 2026	Forecast 2027	Forecast 2028	Forecast 2029	Forecast 2030	Forecast 2031
	Supply											
602.0	Purchased Water	Water Supply Costs	$ 450,000	$ 465,690	$ 481,916	$ 498,696	$ 516,050	$ 533,996	$ 552,554	$ 571,745	$ 591,590	$ 612,112
622/662.004	Power & Telem Expense	General Inflation plus Demand Growth	115,500	119,527	123,692	127,999	132,453	137,059	141,822	146,748	151,842	157,109
641.0	Chemicals Only - Treatment	General Inflation plus Demand Growth	25,000	25,872	26,773	27,705	28,669	29,666	30,697	31,764	32,866	34,006
642.0	Lab/Sampling Expense	General Cost Inflation	30,000	30,900	31,827	32,782	33,765	34,778	35,822	36,896	38,003	39,143
680.0	Street Light Expense	No Escalation	1,313	1,313	1,313	1,313	1,313	1,313	1,313	1,313	1,313	1,313
	Distribution & Maintenance											
610.0	Misc. Well Testing/Monitoring	General Cost Inflation	$ 20,000	$ 20,600	$ 21,218	$ 21,855	$ 22,510	$ 23,185	$ 23,881	$ 24,597	$ 25,335	$ 26,095
611.0	Maint of Well/bldg. & impr	Construction Cost Inflation	40,000	41,200	42,436	43,709	45,020	46,371	47,762	49,195	50,671	52,191
614.0	Maint Pump Station Equip	Construction Cost Inflation	30,000	30,900	31,827	32,782	33,765	34,778	35,822	36,896	38,003	39,143
615.0	Maint Generators	Construction Cost Inflation	10,000	10,300	10,609	10,927	11,255	11,593	11,941	12,299	12,668	13,048
650.0	Operating permits	General Cost Inflation	10,000	10,300	10,609	10,927	11,255	11,593	11,941	12,299	12,668	13,048
661.0	Maint of Tanks/sites	Construction Cost Inflation	10,000	10,300	10,609	10,927	11,255	11,593	11,941	12,299	12,668	13,048
664.0	Small Tools <$1000	General Cost Inflation	10,000	10,300	10,609	10,927	11,255	11,593	11,941	12,299	12,668	13,048
665.0	Mis Supplies & Expense	General Cost Inflation	5,250	5,408	5,570	5,737	5,909	6,086	6,269	6,457	6,651	6,850
666.0	Truck Expense - Gas	General Cost Inflation	25,000	25,750	26,523	27,318	28,138	28,982	29,851	30,747	31,669	32,619
667.0	Maint of Vehicles (tune ups, etc.)	General Cost Inflation	20,000	20,600	21,218	21,855	22,510	23,185	23,881	24,597	25,335	26,095
673.0	Cubing only - Maint of Mains	General Cost Inflation	15,750	16,223	16,709	17,210	17,727	18,259	18,806	19,371	19,952	20,550
673.001	Maint of Mains	Construction Cost Inflation	60,000	61,800	63,654	65,564	67,531	69,556	71,643	73,792	76,006	78,286
675.0	Maint of Services	Construction Cost Inflation	60,000	61,800	63,654	65,564	67,531	69,556	71,643	73,792	76,006	78,286
676.0	Maint of Meters	Construction Cost Inflation	4,000	4,120	4,244	4,371	4,502	4,637	4,776	4,919	5,067	5,219
677.0	Maint of Hydrants	Construction Cost Inflation	20,000	20,600	21,218	21,855	22,510	23,185	23,881	24,597	25,335	26,095
690.0	Field Uniforms	General Cost Inflation	10,000	10,300	10,609	10,927	11,255	11,593	11,941	12,299	12,668	13,048
691.0	Locate Fees	General Cost Inflation	5,000	5,150	5,305	5,464	5,628	5,796	5,970	6,149	6,334	6,524
663.0	Temp Field Labor	Labor Cost Inflation	25,000	26,000	27,040	28,122	29,246	30,416	31,633	32,898	34,214	35,583
662.0	Field Labor	Labor Cost Inflation	672,601	699,505	727,485	756,584	786,848	818,321	851,054	885,097	920,500	957,320
	General & Administrative											
904.000/905.00	Bank Fees & Expense	General Cost Inflation	$ 30,000	$ 30,900	$ 31,827	$ 32,782	$ 33,765	$ 34,778	$ 35,822	$ 36,896	$ 38,003	$ 39,143
921.2	General Office Expenses & Supplies	General Cost Inflation	20,000	20,600	21,218	21,855	22,510	23,185	23,881	24,597	25,335	26,095
921.3	Gen Off Service contracts	General Cost Inflation	26,250	27,038	27,849	28,684	29,545	30,431	31,344	32,284	33,253	34,250
922/922.1	Commissioners Fees	General Cost Inflation	31,920	32,878	33,864	34,880	35,926	37,004	38,114	39,258	40,435	41,648
923.1	Legal Expenses	General Cost Inflation	63,000	64,890	66,837	68,842	70,907	73,034	75,225	77,482	79,807	82,201
923.2/923.210	Engineering Expenses	General Cost Inflation	45,000	46,350	47,741	49,173	50,648	52,167	53,732	55,344	57,005	58,715
923.3	Accounting Expense	General Cost Inflation	35,000	36,050	37,132	38,245	39,393	40,575	41,792	43,046	44,337	45,667
924.0	Insurance Expense	General Cost Inflation	115,000	118,450	122,004	125,664	129,434	133,317	137,316	141,435	145,679	150,049
925.0	Med & Dental/veba	Benefit Cost Inflation	292,231	303,920	316,077	328,720	341,869	355,543	369,765	384,556	399,938	415,935
926.0-926.5	Retirement/401A Expense	Benefit Cost Inflation	215,999	224,639	233,624	242,969	252,688	262,796	273,307	284,240	295,609	307,434
927.0	Safety/Security	General Cost Inflation	13,650	14,060	14,481	14,916	15,363	15,824	16,299	16,788	17,291	17,810
928.0	Auditor Expense	General Cost Inflation	25,000	25,750	26,523	27,318	28,138	28,982	29,851	30,747	31,669	32,619
929.0	Office Utilities	General Cost Inflation	50,000	51,500	53,045	54,636	56,275	57,964	59,703	61,494	63,339	65,239
930.0	Misc. General Exp/Emerg	General Cost Inflation	10,000	10,300	10,609	10,927	11,255	11,593	11,941	12,299	12,668	13,048
930.3	Election Expense	General Cost Inflation	12,600	-	13,113	-	13,911	-	14,758	-	15,657	-
931.0	Dues and Subscriptions	General Cost Inflation	12,500	12,875	13,261	13,659	14,069	14,491	14,926	15,373	15,835	16,310
932.0	Travel Expense	General Cost Inflation	11,000	11,330	11,670	12,020	12,381	12,752	13,135	13,529	13,934	14,353
932.1	Employee Training - Non Exempt staff	General Cost Inflation	7,500	7,725	7,957	8,195	8,441	8,695	8,955	9,224	9,501	9,786
933.0	Consulting Expense	General Cost Inflation	2,000	2,060	2,122	2,185	2,251	2,319	2,388	2,460	2,534	2,610
934.0	Maint of off. Bldg. & Grounds	General Cost Inflation	63,000	64,890	66,837	68,842	70,907	73,034	75,225	77,482	79,807	82,201
935.0	Office/Com Equip Repr/Supplies	General Cost Inflation	1,050	1,082	1,114	1,147	1,182	1,217	1,254	1,291	1,330	1,370
935.1	Computer Support/Software	General Cost Inflation	47,250	48,668	50,128	51,631	53,180	54,776	56,419	58,112	59,855	61,651
936.0	Printing & Postage	General Inflation plus Customer Growth	47,250	48,897	50,601	52,363	54,185	56,070	58,018	60,033	62,117	64,272
938.0	Property Taxes & Assessmts	General Cost Inflation	1,208	1,244	1,281	1,319	1,359	1,400	1,442	1,485	1,530	1,576
939.0	Conserv., ED., Newsletter	General Cost Inflation	5,250	5,408	5,570	5,737	5,909	6,086	6,269	6,457	6,651	6,850
940.0	Rental Prop Expense	General Cost Inflation	-	-	-	-	-	-	-	-	-	-
950/950.4	Insurance Claims	General Cost Inflation	2,000	2,060	2,122	2,185	2,251	2,319	2,388	2,460	2,534	2,610
920.1	Admin Salaries	Labor Cost Inflation	496,006	515,847	536,480	557,940	580,257	603,468	627,606	652,710	678,819	705,972
	Taxes											
408.1	Excise Taxes	[Calculated]	$ 238,687	$ 241,390	$ 242,496	$ 243,601	$ 244,707	$ 245,812	$ 246,918	$ 248,023	$ 249,129	$ 250,235
408.2	Payroll Taxes	Labor Cost Inflation	26,724	27,793	28,905	30,061	31,263	32,514	33,814	35,167	36,574	38,036
408.4	Kent Franchise Fee	[Calculated]	280,401	283,606	284,939	286,273	287,606	288,940	290,273	291,606	292,940	294,273
	Capital Expenses											
101	Capital Purchases	Construction Cost Inflation	$ 52,500	$ 54,075	$ 55,697	$ 57,368	$ 59,089	$ 60,862	$ 62,688	$ 64,568	$ 66,505	$ 68,501
154	Capital Mtr/Parts Inventories	Construction Cost Inflation	220,000	150,000	154,500	159,135	163,909	168,826	173,891	179,108	184,481	190,016
Total Cash O&M Expenditures			$ 4,174,388	$ 4,220,727	$ 4,368,284	$ 4,494,391	$ 4,652,473	$ 4,787,863	$ 4,957,243	$ 5,102,620	$ 5,284,130	$ 5,440,252

Lake Meridian Water District
Water Rate Study
Existing Debt Input

Existing Debt Service - Revenue Bonds	2020	2021	2022	2023	2024	2025	2026	2027	2028	2029	2030	2031
2011 Revenue Bond												
Annual Interest Payment	$ -	$ 8,336	$ 2,803	$ -	$ -	$ -	$ -	$ -	$ -	$ -	$ -	$ -
Annual Principal Payment	-	203,731	209,182	-	-	-	-	-	-	-	-	-
Total Annual Payment	$ -	$ 212,067	$ 211,986	$ -	$ -	$ -	$ -	$ -	$ -	$ -	$ -	$ -
Use of Debt reserve for Debt Service	-	-	-	-	-	-	-	-	-	-	-	-
2010 Revenue Bond												
Annual Interest Payment	$ -	$ 33,169	$ 15,975	$ 14,513	$ 12,938	$ 11,363	$ 9,675	$ 7,875	$ 5,963	$ 4,050	$ 2,025	$ -
Annual Principal Payment	-	65,000	65,000	70,000	70,000	75,000	80,000	85,000	85,000	90,000	90,000	-
Total Annual Payment	$ -	$ 98,169	$ 80,975	$ 84,513	$ 82,938	$ 86,363	$ 89,675	$ 92,875	$ 90,963	$ 94,050	$ 92,025	$ -
Use of Debt reserve for Debt Service	-	-	-	-	-	-	-	-	-	-	-	-
TOTAL REVENUE BONDS												
Annual Interest Payment	$ -	$ 41,505	$ 18,778	$ 14,513	$ 12,938	$ 11,363	$ 9,675	$ 7,875	$ 5,963	$ 4,050	$ 2,025	$ -
Annual Principal Payment	-	268,731	274,182	70,000	70,000	75,000	80,000	85,000	85,000	90,000	90,000	-
Total Annual Payment	$ -	$ 310,236	$ 292,961	$ 84,513	$ 82,938	$ 86,363	$ 89,675	$ 92,875	$ 90,963	$ 94,050	$ 92,025	$ -
Use of Debt reserve for Debt Service	-	-	-	-	-	-	-	-	-	-	-	-
Annual Debt Reserve Target on Existing Revenue Bonds	310,236	310,236	292,961	94,050	94,050	94,050	94,050	94,050	94,050	94,050	92,025	-

Existing Debt Service - PWTF Loans	2020	2021	2022	2023	2024	2025	2026	2027	2028	2029	2030	2031
PWTF Iron and Manganese Filtration System												
Annual Interest Payment	$ -	$ 1,662	$ 1,329	$ 997	$ 665	$ 332	$ -	$ -	$ -	$ -	$ -	$ -
Annual Principal Payment	-	66,464	66,464	66,464	66,464	66,464	-	-	-	-	-	-
Total Annual Payment	$ -	$ 68,125	$ 67,793	$ 67,461	$ 67,128	$ 66,796	$ -	$ -	$ -	$ -	$ -	$ -
Pre-Construction Loan Well #6												
Annual Interest Payment	$ -	$ -	$ 3,042	$ 2,890	$ 2,738	$ 2,586	$ 2,434	$ 2,282	$ 2,129	$ 1,977	$ 1,825	$ 1,673
Annual Principal Payment	-	-	9,000	9,000	9,000	9,000	9,000	9,000	9,000	9,000	9,000	9,000
Total Annual Payment	$ -	$ -	$ 12,042	$ 11,890	$ 11,738	$ 11,586	$ 11,434	$ 11,282	$ 11,129	$ 10,977	$ 10,825	$ 10,673
Construction Loan Well #6												
Annual Interest Payment	$ -	$ -	$ -	$ -	$ 26,212	$ 24,902	$ 23,591	$ 22,280	$ 20,970	$ 19,659	$ 18,349	$ 17,038
Annual Principal Payment	-	-	-	-	82,950	82,950	82,950	82,950	82,950	82,950	82,950	82,950
Total Annual Payment	$ -	$ -	$ -	$ -	$ 109,162	$ 107,852	$ 106,541	$ 105,230	$ 103,920	$ 102,609	$ 101,299	$ 99,988
TOTAL PWTF LOANS												
Annual Interest Payment	$ -	$ 1,662	$ 4,371	$ 3,887	$ 29,615	$ 27,820	$ 26,025	$ 24,562	$ 23,099	$ 21,636	$ 20,174	$ 18,711
Annual Principal Payment	-	66,464	75,464	75,464	158,414	158,414	91,950	91,950	91,950	91,950	91,950	91,950
Total Annual Payment	$ -	$ 68,125	$ 79,835	$ 79,351	$ 188,028	$ 186,233	$ 117,975	$ 116,512	$ 115,049	$ 113,586	$ 112,124	$ 110,661

Existing Debt Service - Other Loans	2020	2021	2022	2023	2024	2025	2026	2027	2028	2029	2030	2031
Soos Creek Loan												
Annual Interest Payment	$ -	$ 158	$ -	$ -	$ -	$ -	$ -	$ -	$ -	$ -	$ -	$ -
Annual Principal Payment	-	31,542	-	-	-	-	-	-	-	-	-	-
Total Annual Payment	$ -	$ 31,699	$ -	$ -	$ -	$ -	$ -	$ -	$ -	$ -	$ -	$ -
Covington Water District Agreement												
Annual Interest Payment	$ -	$ 24,404	$ 23,168	$ 21,892	$ 20,573	$ 19,211	$ 17,804	$ 16,351	$ 14,849	$ 13,298	$ 11,696	$ 10,041
Annual Principal Payment	-	37,460	38,695	39,972	41,290	42,652	44,060	45,513	47,014	48,565	50,167	51,822
Total Annual Payment	$ -	$ 61,864	$ 61,864	$ 61,864	$ 61,864	$ 61,864	$ 61,864	$ 61,864	$ 61,864	$ 61,864	$ 61,864	$ 61,864
TOTAL OTHER LOANS												
Annual Interest Payment	$ -	$ 24,562	$ 23,168	$ 21,892	$ 20,573	$ 19,211	$ 17,804	$ 16,351	$ 14,849	$ 13,298	$ 11,696	$ 10,041
Annual Principal Payment	-	69,001	38,695	39,972	41,290	42,652	44,060	45,513	47,014	48,565	50,167	51,822
Total Annual Payment	$ -	$ 93,563	$ 61,864	$ 61,864	$ 61,864	$ 61,864	$ 61,864	$ 61,864	$ 61,864	$ 61,864	$ 61,864	$ 61,864

Total Existing Debt Service	2020	2021	2022	2023	2024	2025	2026	2027	2028	2029	2030	2031
TOTAL WATER LOANS												
Total Annual Interest Payment	$ -	$ 67,728	$ 46,318	$ 40,291	$ 63,126	$ 58,393	$ 53,504	$ 48,788	$ 43,911	$ 38,985	$ 33,895	$ 28,752
Total Principal Payment	-	404,195	388,341	185,436	269,704	276,066	216,010	222,463	223,964	230,515	232,117	143,772
Total Annual Payment	$ -	$ 471,924	$ 434,659	$ 225,727	$ 332,830	$ 334,460	$ 269,513	$ 271,251	$ 267,875	$ 269,500	$ 266,012	$ 172,525

Lake Meridian Water District
Water Rate Study
Capital Improvement Program

Project Costs and O&M Impacts in Year:	2022

No	Description	2022	2023	2024	2025	2026	2027	2028	2029	2030	2031	Useful Life (Years)	Completion Year	Funding Source
1	1. Interlocal Agreements & Interties													Enterprise Fund
2	103.001 RWA	$ 4,500	$ 4,500	$ 4,500	$ 4,500	$ 4,500	$ 4,500	$ 4,500	$ 4,500	$ 4,500	$ 4,500	50 Years		Enterprise Fund
3	2. Misc. Capital Studies													Enterprise Fund
4	104.001 CFC Rate Study	$ -	$ -	$ -	$ -	$ 30,000	$ -	$ -	$ -	$ -	$ -	10 Years		Enterprise Fund
5	104.002 Misc. Cap - Engineering	5,000	5,000	5,000	5,000	5,000	5,000	5,000	5,000	5,000	5,000	10 Years		Enterprise Fund
6	104.003 Misc. Cap - Attorney	5,000	5,000	5,000	5,000	5,000	5,000	5,000	5,000	5,000	5,000	10 Years		Enterprise Fund
7	104.020 Misc. Geologist	-	-	-	5,000	-	-	-	-	-	-	10 Years		Enterprise Fund
8	3. Tanks / Reservoirs													Enterprise Fund
9	T-5 105.006 Pump + VFD for 1300 Tank	$ -	$ -	$ 50,000	$ 275,000	$ -	$ -	$ -	$ -	$ -	$ -	20 Years		Enterprise Fund
10	105.006.1 Tank & VFD controls	-	-	5,000	45,000	-	-	-	-	-	-	50 Years		Enterprise Fund
11	105.xxx Add Railing on 2 MG Tank	-	-	-	20,000	-	-	-	-	-	-	50 Years		Enterprise Fund
12	4. Future Supply (Water Supply Facilities)													Enterprise Fund
13	106.011 Misc. Hydro Studies	$ -	$ 15,000	$ -	$ -	$ -	$ -	$ -	$ -	$ 15,000	$ -	50 Years		Enterprise Fund
14	106.018.1 Backwash Valve Improvements 3,5,6,9	30,000	-	-	-	-	300,000	-	-	-	-	50 Years		Enterprise Fund
15	106.018.3 Upgrades to Well 3	-	60,000	-	-	-	40,000	-	-	-	40,000	30 Years		Enterprise Fund
16	106.018.5 Upgrades to Well 5	-	-	-	30,000	-	-	-	-	50,000	-	30 Years		Enterprise Fund
17	106.018.6 Upgrades to Well 6	-	-	-	-	-	-	-	50,000	-	-	30 Years		Enterprise Fund
18	106.018.9 Upgrades to Well 9	-	-	50,000	-	-	50,000	-	-	50,000	-	30 Years		Enterprise Fund
19	106.019.1 Well 6 Replacement Pre-Con	22,000	-	-	-	-	-	-	-	-	-	30 Years		Enterprise Fund
20	106.019.2 Well 6 Replacement Construction	400,000	1,100,000	200,000	-	-	-	-	-	-	-	30 Years		Enterprise Fund
21	106.020.1 1400 Reservoir Pre Con	170,000	-	-	-	-	-	-	-	-	-	50 Years		Enterprise Fund
22	106.020.2 1400 Reservoir Design	515,000	750,000	480,000	-	-	-	-	-	-	-	50 Years		Enterprise Fund
23	106.020.3 1400 ReservoirCons	-	-	3,300,000	4,400,000	2,177,800	-	-	-	-	-	50 Years		Enterprise Fund
24	106.020.4 1400 PRV/Booster Stn Precon	157,500	50,000	-	-	-	-	-	-	-	-	50 Years		Enterprise Fund
25	106.020.5 1400 PRV/Booster Stn DESIGN	200,000	442,500	-	-	-	-	-	-	-	-	50 Years		Enterprise Fund
26	106.020.6 1400 PRV/Booster Pump Stations CONSTRUCTION	-	-	2,200,000	2,201,400	-	-	-	-	-	-	50 Years		Enterprise Fund
27	1400 Piping Modifications	55,000	115,000	330,000	190,500	-	-	-	-	-	-	50 Years		Enterprise Fund
28	106.020.7 1100 Reservoir Demolition	-	-	-	-	120,000	-	-	-	-	-	50 Years		Enterprise Fund
29	5. Existing Main/Service Line - Replacement Program											50 Years		Enterprise Fund
30	R10A 266th - 132nd to 134 - 660' 12"	$ -	$ -	$ -	$ -	$ -	$ -	$ -	$ -	$ -	$ -	50 Years		Enterprise Fund
31	R10B 134th - 266th to 268 - 640' 12"	-	-	-	-	-	-	-	-	-	-	50 Years		Enterprise Fund
32	R10C SE 268th - 134 to 137th - 800' 12"	-	-	-	-	-	-	-	-	-	-	50 Years		Enterprise Fund
33	R16D 148th - 152nd to 268th - 760' 12"	-	-	-	-	-	-	-	304,000	-	-	50 Years		Enterprise Fund
34	R16E Lk Meridian Park loop 550' 12"	-	-	-	-	-	-	-	220,000	-	-	50 Years		Enterprise Fund
35	R22A 132 - 240th to 256 - 5,230' 12"	-	-	-	-	-	-	-	-	-	2,092,000	50 Years		Enterprise Fund
36	R24A 132nd - 256th to 263rd - 2,530' 12"	-	-	-	-	-	-	-	-	-	1,012,000	50 Years		Enterprise Fund
37	R24B 132nd - 263rd to 270th - 2,100' 12"	-	-	-	-	-	-	-	-	-	840,000	50 Years		Enterprise Fund
38	R29A 132nd - 272nd to 278th - 1,990' 12"	-	-	-	-	-	-	-	-	-	796,000	50 Years		Enterprise Fund
39	R29B SE 272 - 131st to 132nd - 370' 12"	-	-	-	-	-	-	-	-	-	148,000	50 Years		Enterprise Fund
40	R30A 138th Pl - 269 to end - 1,160' 8"	-	-	-	-	-	-	-	464,000	-	-	50 Years		Enterprise Fund
41	R30B SE 266 - 134th to 138th Pl 910' 8"	-	-	-	-	-	-	-	364,000	-	-	50 Years		Enterprise Fund
42	R30C SE 267 - 138th Pl to end 320' 8"	-	-	-	-	-	-	-	128,000	-	-	50 Years		Enterprise Fund
43	R30D SE 268 -138th Pl to 137th - 520' 8"	-	-	-	-	-	-	-	208,000	-	-	50 Years		Enterprise Fund
44	R30E 135th - 266th to end - 200' 8"	-	-	-	-	-	-	-	80,000	-	-	50 Years		Enterprise Fund
45	R32A SE 263rd - 144th to 148th 1,190' 8"	-	-	-	-	-	-	-	-	-	-	50 Years		Enterprise Fund
46	R32B 148th - 263rd to 268th - 1,290' 8"	-	-	-	-	-	-	-	-	-	-	50 Years		Enterprise Fund
47	R43A 282nd 124 to 127th - 1000'	-	-	-	-	-	-	-	-	-	-	50 Years		Enterprise Fund
48	R44A Alpine Vista/152/148th 1200'	-	-	-	-	-	-	-	480,000	-	-	50 Years		Enterprise Fund
49	R50A SE 256th improvmts 132 to 152nd (pg 8-4)	-	-	-	50,000	173,400	-	-	-	-	-	50 Years		Enterprise Fund
50	6. Main Extensions - New								-	-	-	50 Years		Enterprise Fund
51	107.037 254th Intertie w/Covington (page 8-4)	$ 50,000	$ 350,000	$ -	$ -	$ -	$ -	$ -	$ -	$ -	$ -	50 Years		Enterprise Fund
52	107.049 2019 AC Main Replacement	-	-	-	-	-	-	-	-	-	-	50 Years		Enterprise Fund
53	Misc ACMain Asset Replacement	-	250,000	-	-	-	-	200,000	200,000	200,000	200,000	50 Years		Enterprise Fund
54	"Loop closures" from developers	10,000	10,000	10,000	10,000	10,000	10,000	10,000	10,000	10,000	10,000	50 Years		Enterprise Fund
55	7. Misc. Capital Projects, Admin bldg., telem, filtration, inter													Enterprise Fund
56	109.002.4 Telemetry Upgrades	$ 50,000	$ 50,000	$ 10,000	$ 10,000	$ 10,000	$ 10,000	$ 10,000	$ 10,000	$ 10,000	$ 10,000	50 Years		Enterprise Fund
57	109.xxx AC Pipe/Service line study	-	-	-	-	15,000	-	15,000	-	15,000	-	50 Years		Enterprise Fund
58	109.035.1 GIS/Asset management project Phase 2	45,000	35,000	-	-	-	-	-	-	-	-	50 Years		Enterprise Fund
59	109.036.1 Admin Building Improvements	35,000	10,000	-	-	-	-	-	-	-	-	50 Years		Enterprise Fund
60	109.036.2 Equipment Stor Bldg Improv	60,000	40,000	-	-	-	-	-	-	-	-	50 Years		Enterprise Fund
61	Admin Covered Meeting Room	40,000	10,000	-	-	-	-	-	-	-	-	20 Years		Enterprise Fund
62	109.038.3 Chlorine generation system Well 3	-	-	-	-	20,000	-	-	-	-	-	20 Years		Enterprise Fund
63	109.038.5 Chlorine generation system Well 5	-	-	20,000	-	-	-	-	-	-	-	20 Years		Enterprise Fund
64	109.038.6 Chlorine generation system Well 6	-	-	-	-	-	-	-	30,000	-	-	20 Years		Enterprise Fund
65	108.038.9 Chlorine generation system Well 9	-	30,000	-	-	-	-	-	-	-	-	20 Years		Enterprise Fund
66	109.034 Chlorine (Chemical Feed) Pump Project Wells 6&9*	-	-	-	-	-	-	-	-	-	-	20 Years		Enterprise Fund
67	109.037 Permanent Well 6 Generator	-	-	-	-	-	-	-	-	-	-	50 Years		Enterprise Fund
68	8. Misc Capital Payments/ Purchases													Enterprise Fund
69	District Vehicles	$ 60,000	$ -	$ 60,000	$ -	$ 60,000	$ -	$ 60,000	$ -	$ 60,000	$ -	7 Years		Enterprise Fund
70	Misc Construction	40,000	60,000	60,000	60,000	60,000	60,000	60,000	60,000	60,000		50 Years		Enterprise Fund
71	Misc Cap Annual - Contingency	10,000	10,000	10,000	10,000	10,000	10,000	10,000	10,000	10,000	10,000	50 Years		Enterprise Fund
72	Upgrade Well Monioring System	-	20,000	-	-	-	-	-	20,000	20,000	-	30 Years		Enterprise Fund
73	9. Oversizing													Enterprise Fund
74	Misc Annual D.E. Oversizing Reinbursement	$ 3,000	$ 3,000	$ 3,000	$ 3,000	$ 3,000	$ 3,000	$ 3,000	$ 3,000	$ 3,000	$ 3,000	50 Years		Enterprise Fund
75	Annual - Payment Bond for Oversizing	500	500	500	500	500	500	500	500	500	500	50 Years		Enterprise Fund
	Total Capital Projects	$ 1,967,500	$ 3,425,500	$ 6,803,000	$ 7,324,900	$ 2,704,200	$ 498,000	$ 383,000	$ 2,656,000	$ 518,000	$ 5,176,000			
	Total Upgrade/Expansion Projects	772,750	1,162,750	3,301,500	3,662,450	1,352,100	249,000	191,500	1,328,000	259,000	2,588,000			
	Total R&R Projects	1,194,750	2,262,750	3,501,500	3,662,450	1,352,100	249,000	191,500	1,328,000	259,000	2,588,000			
	Projects by Grants / Developer Donations	$ -	$ -	$ -	$ -	$ -	$ -	$ -	$ -	$ -	$ -			
	Projects by Enterprise Fund	1,967,500	3,425,500	6,803,000	7,324,900	2,704,200	498,000	383,000	2,656,000	518,000	5,176,000			

Lake Meridian Water District
Water Rate Study
Capital Improvement Program

Project Costs and O&M Impacts in Year:

No	Description	TOTAL ESCALATED COSTS	2022	2023	2024	2025	2026	2027	2028	2029	2030	2031
1	1. Interlocal Agreements & Interties	$ -	$ -	$ -	$ -	$ -	$ -	$ -	$ -	$ -	$ -	$ -
2	103.001 RWA	50,781	4,500	4,635	4,774	4,917	5,065	5,065	5,217	5,373	5,534	5,700
3	2. Misc. Capital Studies	-	-	-	-	-	-	-	-	-	-	-
4	104.001 CFC Rate Study	33,765	-	-	-	-	33,765	-	-	-	-	-
5	104.002 Misc. Cap - Engineering	56,423	5,000	5,150	5,305	5,464	5,628	5,628	5,796	5,970	6,149	6,334
6	104.003 Misc. Cap - Attorney	56,423	5,000	5,150	5,305	5,464	5,628	5,628	5,796	5,970	6,149	6,334
7	104.020 Misc. Geologist	5,464	-	-	-	5,464	-	-	-	-	-	-
8	3. Tanks / Reservoirs	-	-	-	-	-	-	-	-	-	-	-
9	T-5 105.006 Pump + VFD for 1300 Tank	353,545	-	-	53,045	300,500	-	-	-	-	-	-
10	105.006.1 Tank & VFD controls	54,477	-	-	5,305	49,173	-	-	-	-	-	-
11	105.xxx Add Railing on 2 MG Tank	21,855	-	-	-	21,855	-	-	-	-	-	-
12	4. Future Supply (Water Supply Facilities)	-	-	-	-	-	-	-	-	-	-	-
13	106.011 Misc. Hydro Studies	33,898	-	15,450	-	-	-	-	-	-	18,448	-
14	106.018.1 Backwash Valve Improvements 3,5,6,9	367,653	30,000	-	-	-	-	337,653	-	-	-	-
15	106.018.3 Upgrades to Well 3	157,491	-	61,800	-	-	-	45,020	-	-	-	50,671
16	106.018.5 Upgrades to Well 5	94,276	-	-	-	32,782	-	-	-	-	61,494	-
17	106.018.6 Upgrades to Well 6	59,703	-	-	-	-	-	-	-	59,703	-	-
18	106.018.9 Upgrades to Well 9	170,814	-	-	53,045	-	-	56,275	-	-	61,494	-
19	106.019.1 Well 6 Replacement Pre-Con	22,000	22,000	-	-	-	-	-	-	-	-	-
20	106.019.2 Well 6 Replacement Construction	1,745,180	400,000	1,133,000	212,180	-	-	-	-	-	-	-
21	106.020.1 1400 Reservoir Pre Con	170,000	170,000	-	-	-	-	-	-	-	-	-
22	106.020.2 1400 Reservoir Design	1,796,732	515,000	772,500	509,232	-	-	-	-	-	-	-
23	106.020.3 1400 ReservoirCons	10,760,102	-	-	3,500,970	4,807,999	2,451,133	-	-	-	-	-
24	106.020.4 1400 PRV/Booster Stn Precon	209,000	157,500	51,500	-	-	-	-	-	-	-	-
25	106.020.5 1400 PRV/Booster Stn DESIGN	655,775	200,000	455,775	-	-	-	-	-	-	-	-
26	106.020.6 1400 PRV/Booster Pump Stations CONSTRUCTION	4,739,509	-	-	2,333,980	2,405,529	-	-	-	-	-	-
27	1400 Piping Modifications	731,711	55,000	118,450	350,097	208,164	-	-	-	-	-	-
28	106.020.7 1100 Reservoir Demolition	135,061	-	-	-	-	135,061	-	-	-	-	-
29	5. Existing Main/Service Line - Replacement Program	-	-	-	-	-	-	-	-	-	-	-
30	R10A 266th - 132nd to 134 - 660' 12"	-	-	-	-	-	-	-	-	-	-	-
31	R10B 134th - 266th to 268 - 640' 12"	-	-	-	-	-	-	-	-	-	-	-
32	R10C SE 268th - 134 to 137th - 800' 12"	-	-	-	-	-	-	-	-	-	-	-
33	R16D 148th - 152nd to 268th - 760' 12"	362,992	-	-	-	-	-	-	-	362,992	-	-
34	R16E Lk Meridian Park loop 550' 12"	262,692	-	-	-	-	-	-	-	262,692	-	-
35	R22A 132 - 240th to 256 - 5,230' 12"	2,650,083	-	-	-	-	-	-	-	-	-	2,650,083
36	R24A 132nd - 256th to 263rd - 2,530' 12"	1,281,971	-	-	-	-	-	-	-	-	-	1,281,971
37	R24B 132nd - 263rd to 270th - 2,100' 12"	1,064,087	-	-	-	-	-	-	-	-	-	1,064,087
38	R29A 132nd - 272nd to 278th - 1,990' 12"	1,008,349	-	-	-	-	-	-	-	-	-	1,008,349
39	R29B SE 272 - 131st to 132nd - 370' 12"	187,482	-	-	-	-	-	-	-	-	-	187,482
40	R30A 138th Pl - 269 to end - 1,160' 8"	554,040	-	-	-	-	-	-	-	554,040	-	-
41	R30B SE 266 - 134th to 138th Pl 910' 8"	434,635	-	-	-	-	-	-	-	434,635	-	-
42	R30C SE 267 - 138th Pl to end 320' 8"	152,839	-	-	-	-	-	-	-	152,839	-	-
43	R30D SE 268 -138th Pl to 137th - 520' 8"	248,363	-	-	-	-	-	-	-	248,363	-	-
44	R30E 135th - 266th to end - 200' 8"	95,524	-	-	-	-	-	-	-	95,524	-	-
45	R32A SE 263rd - 144th to 148th 1,190' 8"	-	-	-	-	-	-	-	-	-	-	-
46	R32B 148th - 263rd to 268th - 1,290' 8"	-	-	-	-	-	-	-	-	-	-	-
47	R43A 282nd 124 to 127th - 1000'	-	-	-	-	-	-	-	-	-	-	-
48	R44A Alpine Vista/152/148th 1200'	573,145	-	-	-	-	-	-	-	573,145	-	-
49	R50A SE 256th improvmts 132 to 152nd (pg 8-4)	249,800	-	-	-	54,636	195,163	-	-	-	-	-
50	6. Main Extensions - New	-	-	-	-	-	-	-	-	-	-	-
51	107.037 254th Intertie w/Covington (page 8-4)	410,500	50,000	360,500	-	-	-	-	-	-	-	-
52	107.049 2019 AC Main Replacement	-	-	-	-	-	-	-	-	-	-	-
53	Misc ACMain Asset Replacement	1,227,494	-	257,500	-	-	-	-	231,855	238,810	245,975	253,354
54	"Loop closures" from developers	112,846	10,000	10,300	10,609	10,927	11,255	11,255	11,593	11,941	12,299	12,668
55	7. Misc. Capital Projects, Admin bldg., telem, filtration, inter	-	-	-	-	-	-	-	-	-	-	-
56	109.002.4 Telemetry Upgrades	194,046	50,000	51,500	10,609	10,927	11,255	11,255	11,593	11,941	12,299	12,668
57	109.xxx AC Pipe/Service line study	52,720	-	-	-	-	16,883	-	17,389	-	18,448	-
58	109.035.1 GIS/Asset management project Phase 2	81,050	45,000	36,050	-	-	-	-	-	-	-	-
59	109.036.1 Admin Building Improvements	45,300	35,000	10,300	-	-	-	-	-	-	-	-
60	109.036.2 Equipment Stor Bldg Improv	101,200	60,000	41,200	-	-	-	-	-	-	-	-
61	Admin Covered Meeting Room	50,300	40,000	10,300	-	-	-	-	-	-	-	-
62	109.038.3 Chlorine generation system Well 3	22,510	-	-	-	-	22,510	-	-	-	-	-
63	109.038.5 Chlorine generation system Well 5	21,218	-	-	21,218	-	-	-	-	-	-	-
64	109.038.6 Chlorine generation system Well 6	35,822	-	-	-	-	-	-	-	35,822	-	-
65	108.038.9 Chlorine generation system Well 9	30,900	-	30,900	-	-	-	-	-	-	-	-
66	109.034 Chlorine (Chemical Feed) Pump Project Wells 6&9*	-	-	-	-	-	-	-	-	-	-	-
67	109.037 Permanent Well 6 Generator	-	-	-	-	-	-	-	-	-	-	-
68	8. Misc Capital Payments/ Purchases	-	-	-	-	-	-	-	-	-	-	-
69	District Vehicles	334,533	60,000	-	63,654	-	67,531	-	69,556	-	73,792	-
70	Misc Construction	581,071	40,000	61,800	63,654	65,564	67,531	67,531	69,556	71,643	73,792	-
71	Misc Cap Annual - Contingency	112,846	10,000	10,300	10,609	10,927	11,255	11,255	11,593	11,941	12,299	12,668
72	Upgrade Well Monioring System	69,079	-	20,600	-	-	-	-	-	23,881	24,597	-
73	9. Oversizing	-	-	-	-	-	-	-	-	-	-	-
74	Misc Annual D.E. Oversizing Reinbursement	33,854	3,000	3,090	3,183	3,278	3,377	3,377	3,478	3,582	3,690	3,800
75	Annual - Payment Bond for Oversizing	5,642	500	515	530	546	563	563	580	597	615	633
	Total Capital Projects	$ 35,130,569	$ 1,967,500	$ 3,528,265	$ 7,217,303	$ 8,004,116	$ 3,043,601	$ 560,503	$ 444,002	$ 3,171,403	$ 637,075	$ 6,556,802
	Total Upgrade/Expansion Projects	16,681,695	772,750	1,197,633	3,502,561	4,002,058	1,521,800	280,252	222,001	1,585,701	318,537	3,278,401
	Total R&R Projects	18,448,875	1,194,750	2,330,633	3,714,741	4,002,058	1,521,800	280,252	222,001	1,585,701	318,537	3,278,401
	Projects by Grants / Developer Donations	-	-	-	-	-	-	-	-	-	-	-
	Projects by Enterprise Fund	35,130,569	1,967,500	3,528,265	7,217,303	8,004,116	3,043,601	560,503	444,002	3,171,403	637,075	6,556,802

Lake Meridian Water District
Water Rate Study
Capital Funding Analysis

Summary of Expenditures	2022	2023	2024	2025	2026	2027	2028	2029	2030	2031	2020 - 2042 TOTAL
CAPITAL PROJECTS											
Improvement Upgrades & Expansions	$ 772,750	$ 1,197,633	$ 3,502,561	$ 4,002,058	$ 1,521,800	$ 280,252	$ 222,001	$ 1,585,701	$ 318,537	$ 3,278,401	$ 16,681,695
Repairs and Replacements	1,194,750	2,330,633	3,714,741	4,002,058	1,521,800	280,252	222,001	1,585,701	318,537	3,278,401	18,448,875
TOTAL CAPITAL EXPENDITURES	$ 1,967,500	$ 3,528,265	$ 7,217,303	$ 8,004,116	$ 3,043,601	$ 560,503	$ 444,002	$ 3,171,403	$ 637,075	$ 6,556,802	$ 35,130,569

Capital Financing Plan	2022	2023	2024	2025	2026	2027	2028	2029	2030	2031	TOTAL
Additional Proceeds (Costs)	$ 209,000	$ 650,000	$ 800,000	$ -	$ -	$ -	$ -	$ -	$ -	$ -	$ 1,769,742
Project Specific CIAC	-	-	-	-	-	-	-	-	-	-	-
Project to be Funded	$ 1,758,500	$ 2,878,265	$ 6,417,303	$ 8,004,116	$ 3,043,601	$ 560,503	$ 444,002	$ 3,171,403	$ 637,075	$ 6,556,802	$ 33,471,569
OTHER FUNDING SOURCES											
Other Outside Sources	$ -	$ -	$ -	$ -	$ -	$ -	$ -	$ -	$ -	$ -	$ -
Rate Funded System Reinvestment	350,000	350,000	241,598	267,225	408,088	411,049	698,101	722,733	731,894	844,366	21,127,970
PWTF Loans	-	-	-	-	-	-	-	-	-	-	-
Other Loans	-	-	-	-	-	-	-	-	-	-	-
Revenue Bond Proceeds	-	-	11,800,000	-	-	-	-	5,700,000	-	-	17,500,000
TOTAL CAPITAL RESOURCES	$ 559,000	$ 1,000,000	$ 12,841,598	$ 267,225	$ 408,088	$ 411,049	$ 698,101	$ 6,422,733	$ 731,894	$ 844,366	$ 40,397,712
Info: Working Capital Contingency Deficit	-	-	-	-	-	-	-	-	-	-	-

New Debt Computations	2022	2023	2024	2025	2026	2027	2028	2029	2030	2031	TOTAL
REVENUE BONDS											
Amount to Fund	$ -	$ -	$ 11,800,000	$ -	$ -	$ -	$ -	$ 5,700,000	$ -	$ -	$ 17,500,000
Issuance Costs	-	-	259,988	-	-	-	-	125,588	-	-	385,576
Reserve Required	-	-	824,779	-	-	-	-	398,410	-	-	1,223,190
Amount of Debt Issue	$ -	$ -	$ 12,884,768	$ -	$ -	$ -	$ -	$ 6,223,998	$ -	$ -	$ 19,108,765
PWTF LOANS											
Amount to Fund	$ -	$ -	$ -	$ -	$ -	$ -	$ -	$ -	$ -	$ -	$ -
OTHER LOANS											
Amount to Fund	$ -	$ -	$ -	$ -	$ -	$ -	$ -	$ -	$ -	$ -	$ -
Issuance Costs	-	-	-	-	-	-	-	-	-	-	-
Amount of Debt Issue	$ -	$ -	$ -	$ -	$ -	$ -	$ -	$ -	$ -	$ -	$ -

Debt Service Summary	2022	2023	2024	2025	2026	2027	2028	2029	2030	2031	TOTAL
EXISTING DEBT SERVICE											
Annual Interest Payments	$ 46,318	$ 40,291	$ 63,126	$ 58,393	$ 53,504	$ 48,788	$ 43,911	$ 38,985	$ 33,895	$ 28,752	$ 656,381
Annual Principal Payments	388,341	185,436	269,704	276,066	216,010	222,463	223,964	230,515	232,117	143,772	4,075,791
Total Debt Service Payments	$ 434,659	$ 225,727	$ 332,830	$ 334,460	$ 269,513	$ 271,251	$ 267,875	$ 269,500	$ 266,012	$ 172,525	$ 4,732,172
Revenue Bond Payments Only	292,961	84,513	82,938	86,363	89,675	92,875	90,963	94,050	92,025	-	1,316,596
NEW DEBT SERVICE											
Annual Interest Payments	$ -	$ -	$ 515,391	$ 503,015	$ 490,145	$ 476,759	$ 462,838	$ 697,321	$ 676,286	$ 654,410	$ 9,953,655
Annual Principal Payments	-	-	309,389	321,764	334,635	348,020	361,941	525,869	546,904	568,780	11,294,895
Total Debt Service Payments	$ -	$ -	$ 824,779	$ 824,779	$ 824,779	$ 824,779	$ 824,779	$ 1,223,190	$ 1,223,190	$ 1,223,190	$ 21,248,550
Revenue Bond Payments Only	-	-	824,779	824,779	824,779	824,779	824,779	1,223,190	1,223,190	1,223,190	21,248,550
TOTAL DEBT SERVICE PAYMENTS	$ 434,659	$ 225,727	$ 1,157,609	$ 1,159,239	$ 1,094,293	$ 1,096,030	$ 1,092,655	$ 1,492,690	$ 1,489,202	$ 1,395,714	$ 25,980,722
Total Interest Payments	46,318	40,291	578,516	561,409	543,648	525,547	506,749	736,306	710,181	683,162	10,610,036
Total Principal Payments	388,341	185,436	579,093	597,830	550,644	570,483	585,905	756,384	779,021	712,552	15,370,686
Total Revenue Bond Payments Only	292,961	84,513	907,717	911,142	914,454	917,654	915,742	1,317,240	1,315,215	1,223,190	22,565,146

Lake Meridian Water District
Water Rate Study
Revenue Requirements Analysis

Cash Flow Sufficiency Test	2022	2023	2024	2025	2026	2027	2028	2029	2030	2031
EXPENSES										
Cash Operating Expenses	$ 4,174,388	$ 4,220,727	$ 4,368,284	$ 4,494,391	$ 4,652,473	$ 4,787,863	$ 4,957,243	$ 5,102,620	$ 5,284,130	$ 5,440,252
Existing Debt Service	434,659	225,727	332,830	334,460	269,513	271,251	267,875	269,500	266,012	172,525
New Debt Service	-	-	824,779	824,779	824,779	824,779	824,779	1,223,190	1,223,190	1,223,190
Rate Funded System Reinvestment	350,000	350,000	241,598	267,225	408,088	411,049	698,101	722,733	731,894	844,366
Additions to Operating Reserve	-	-	-	-	-	-	-	-	-	-
Total Expenses	$ 4,959,047	$ 4,796,453	$ 5,767,491	$ 5,920,855	$ 6,154,853	$ 6,294,942	$ 6,747,998	$ 7,318,042	$ 7,505,225	$ 7,680,332
REVENUES										
Rate Revenue	$ 4,600,107	$ 4,652,453	$ 4,674,329	$ 4,696,204	$ 4,718,080	$ 4,739,955	$ 4,761,831	$ 4,783,706	$ 4,805,582	$ 4,827,457
Other Non-Rate Revenue	442,824	422,037	423,668	436,232	445,735	456,792	459,626	461,722	467,157	468,892
Capital Facilities Charge Revenue Towards Debt	-	-	-	-	-	-	-	-	-	-
Operating Fund & Debt Reserve Fund Interest Earnings	35,804	11,678	11,735	22,724	30,653	40,135	41,395	41,917	45,777	45,938
Total Revenue	$ 5,078,734	$ 5,086,168	$ 5,109,732	$ 5,155,161	$ 5,194,468	$ 5,236,882	$ 5,262,851	$ 5,287,345	$ 5,318,515	$ 5,342,288
NET CASH FLOW (DEFICIENCY)	$ 119,687	$ 289,715	$ (657,759)	$ (765,694)	$ (960,385)	$ (1,058,060)	$ (1,485,147)	$ (2,030,697)	$ (2,186,710)	$ (2,338,045)
% of Rate Revenue	-2.60%	-6.23%	14.07%	16.30%	20.36%	22.32%	31.19%	42.45%	45.50%	48.43%

Coverage Sufficiency Test - Legal Requirement	2022	2023	2024	2025	2026	2027	2028	2029	2030	2031
EXPENSES										
Cash Operating Expenses	$ 4,174,388	$ 4,220,727	$ 4,368,284	$ 4,494,391	$ 4,652,473	$ 4,787,863	$ 4,957,243	$ 5,102,620	$ 5,284,130	$ 5,440,252
Maximum Annual Revenue Bond Debt Service:										
Assessment Bonds	-	-	-	-	-	-	-	-	-	-
Non-Assessment Bonds	310,236	310,236	310,236	310,236	310,236	310,236	310,236	310,236	310,236	310,236
Revenue Bond Coverage Requirement	77,559	77,559	77,559	77,559	77,559	77,559	77,559	77,559	77,559	77,559
Total Expenses	$ 4,562,183	$ 4,608,521	$ 4,756,079	$ 4,882,186	$ 5,040,267	$ 5,175,657	$ 5,345,037	$ 5,490,414	$ 5,671,924	$ 5,828,046
ALLOWABLE REVENUES										
Rate Revenue	$ 4,600,107	$ 4,652,453	$ 4,674,329	$ 4,696,204	$ 4,718,080	$ 4,739,955	$ 4,761,831	$ 4,783,706	$ 4,805,582	$ 4,827,457
Other Revenue	442,824	422,037	423,668	436,232	445,735	456,792	459,626	461,722	467,157	468,892
Capital Facilities Charge Revenue	351,880	351,880	351,880	351,880	351,880	351,880	351,880	351,880	351,880	351,880
Interest Earnings - All Funds	49,530	43,747	35,720	103,704	65,585	55,691	63,086	73,547	122,842	129,551
Total Revenue	$ 5,444,340	$ 5,470,117	$ 5,485,597	$ 5,588,020	$ 5,581,280	$ 5,604,318	$ 5,636,423	$ 5,670,855	$ 5,747,461	$ 5,777,780
Coverage Realized (Existing Rates)	4.09	4.03	3.60	3.53	2.99	2.63	2.19	1.83	1.49	1.09
Coverage Required	1.25	1.25	1.25	1.25	1.25	1.25	1.25	1.25	1.25	1.25
COVERAGE SURPLUS (DEFICIENCY)	$ 882,157	$ 861,596	$ 729,519	$ 705,834	$ 541,013	$ 428,661	$ 291,386	$ 180,441	$ 75,536	$ (50,266)

Coverage Sufficiency Test - District Policy	2022	2023	2024	2025	2026	2027	2028	2029	2030	2031
EXPENSES										
Cash Operating Expenses	$ 4,174,388	$ 4,220,727	$ 4,368,284	$ 4,494,391	$ 4,652,473	$ 4,787,863	$ 4,957,243	$ 5,102,620	$ 5,284,130	$ 5,440,252
Revenue Bond Debt Service	292,961	84,513	907,717	911,142	914,454	917,654	915,742	1,317,240	1,315,215	1,223,190
Revenue Bond Coverage Requirement at 1.25	73,240	21,128	226,929	227,785	228,614	229,414	228,935	329,310	328,804	305,797
Total Expenses	$ 4,540,589	$ 4,326,367	$ 5,502,930	$ 5,633,319	$ 5,795,541	$ 5,934,931	$ 6,101,920	$ 6,749,169	$ 6,928,148	$ 6,969,239
ALLOWABLE REVENUES										
Rate Revenue	$ 4,600,107	$ 4,652,453	$ 4,674,329	$ 4,696,204	$ 4,718,080	$ 4,739,955	$ 4,761,831	$ 4,783,706	$ 4,805,582	$ 4,827,457
Other Revenue	442,824	422,037	423,668	436,232	445,735	456,792	459,626	461,722	467,157	468,892
Capital Facilities Charge Revenue	351,880	351,880	351,880	351,880	351,880	351,880	351,880	351,880	351,880	351,880
Interest Earnings - All Funds	49,530	43,747	35,720	103,704	65,585	55,691	63,086	73,547	122,842	129,551
Total Revenue	$ 5,444,340	$ 5,470,117	$ 5,485,597	$ 5,588,020	$ 5,581,280	$ 5,604,318	$ 5,636,423	$ 5,670,855	$ 5,747,461	$ 5,777,780
Coverage Realized (Existing Rates)	4.33	14.78	1.23	1.20	1.02	0.89	0.74	0.43	0.35	0.28
COVERAGE SURPLUS (DEFICIENCY)	$ 903,751	$ 1,143,750	$ (17,333)	$ (45,298)	$ (214,261)	$ (330,612)	$ (465,497)	$ (1,078,314)	$ (1,180,687)	$ (1,191,459)

Lake Meridian Water District
Water Rate Study
Revenue Requirements Analysis

Maximum Revenue Deficiency	2022	2023	2024	2025	2026	2027	2028	2029	2030	2031
Maximum Revenue Deficiency (Surplus)	$ (119,687)	$ (289,715)	$ 657,759	$ 765,694	$ 960,385	$ 1,058,060	$ 1,485,147	$ 2,030,697	$ 2,186,710	$ 2,338,045
plus: Additional (Reduction) Excise Tax	(6,338)	(15,341)	34,830	40,546	50,855	56,027	78,643	107,532	115,793	123,807
less: Net Revenue From Prior Rate Adjustments	-	-	(280,460)	(580,451)	(901,229)	(1,244,129)	(1,610,573)	(1,906,047)	(2,183,577)	(2,474,356)
Net Revenue Deficiency (Surplus)	$ (126,024)	$ (305,056)	$ 412,130	$ 225,789	$ 110,012	$ (130,041)	$ (46,783)	$ 232,181	$ 118,926	$ (12,505)
Required Adjustment (Full Year)	*-2.74%*	*-6.56%*	*8.32%*	*4.28%*	*1.96%*	*-2.17%*	*-0.73%*	*3.47%*	*1.70%*	*-0.17%*

Rate Increases	2022	2023	2024	2025	2026	2027	2028	2029	2030	2031
Rate Revenue with no Increase	$ 4,600,107	$ 4,652,453	$ 4,674,329	$ 4,696,204	$ 4,718,080	$ 4,739,955	$ 4,761,831	$ 4,783,706	$ 4,805,582	$ 4,827,457
Revenues from Prior Rate Increases	-	-	280,460	580,451	901,229	1,244,129	1,610,573	1,906,047	2,183,577	2,474,356
Rate Revenue Before Rate Increase (Incl. previous increases)	$ 4,600,107	$ 4,652,453	$ 4,954,789	$ 5,276,655	$ 5,619,309	$ 5,984,084	$ 6,372,404	$ 6,689,753	$ 6,989,159	$ 7,301,813
Required Annual Rate Increase (Full Year)	-2.74%	-6.56%	8.32%	4.28%	1.96%	-2.17%	-0.73%	3.47%	1.70%	-0.17%
Number of Months New Rates Will Be In Effect	12	12	12	12	12	12	12	12	12	12
Info: Percentage Increase to Generate Required Revenue	*-2.74%*	*-6.56%*	*8.32%*	*4.28%*	*1.96%*	*-2.17%*	*-0.73%*	*3.47%*	*1.70%*	*-0.17%*
Policy Induced Rate Increases	0.00%	6.00%	6.00%	6.00%	6.00%	6.00%	4.50%	4.00%	4.00%	4.00%
ANNUAL RATE INCREASE	0.00%	6.00%	6.00%	6.00%	6.00%	6.00%	4.50%	4.00%	4.00%	4.00%
CUMULATIVE RATE INCREASE	0.00%	6.00%	12.36%	19.10%	26.25%	33.82%	39.84%	45.44%	51.26%	57.31%

Impacts of Rate Increases	2022	2023	2024	2025	2026	2027	2028	2029	2030	2031
Rate Revenues After Rate Increase	$ 4,600,107	$ 4,931,601	$ 5,252,076	$ 5,593,255	$ 5,956,467	$ 6,343,129	$ 6,659,162	$ 6,957,343	$ 7,268,725	$ 7,593,886
Full Year Rate Revenues After Rate Increase	*$ 4,600,107*	*$ 4,931,601*	*$ 5,252,076*	*$ 5,593,255*	*$ 5,956,467*	*$ 6,343,129*	*$ 6,659,162*	*$ 6,957,343*	*$ 7,268,725*	*$ 7,593,886*
Partial Year Adjustment	-	-	-	-	-	-	-	-	-	-
Additional (Reduction of) Taxes Due to Rate Increases	-	29,866	61,813	95,975	132,495	171,524	202,995	232,557	263,532	295,980
Net Cash Flow After Rate Increase	$ 119,687	$ 538,996	$ (141,825)	$ 35,380	$ 145,507	$ 373,590	$ 209,189	$ (89,617)	$ 12,902	$ 132,403
Coverage After Rate Increase - Legal Requirement	4.09	4.83	5.26	6.11	6.56	7.25	7.65	8.09	8.58	9.05
Coverage After Rate Increase - District Calculation	4.33	17.73	1.80	2.08	2.23	2.45	2.59	1.90	2.02	2.30

New Debt Assumptions	2022	2023	2024	2025	2026	2027	2028	2029	2030	2031
Revenue Bond Proceeds	$ -	$ -	$ 11,800,000	$ -	$ -	$ -	$ -	$ 5,700,000	$ -	$ -
PWTF Loans	-	-	-	-	-	-	-	-	-	-
Other Loan Proceeds	-	-	-	-	-	-	-	-	-	-

Fund Balance Impacts	2022	2023	2024	2025	2026	2027	2028	2029	2030	2031
Ending Fund Balance - Operating Fund	$ 1,029,301	$ 1,040,727	$ 898,902	$ 934,282	$ 1,079,789	$ 1,180,569	$ 1,222,334	$ 1,132,717	$ 1,145,619	$ 1,278,022
Minimum Target - Operating Fund	*857,751*	*867,273*	*897,593*	*923,505*	*955,988*	*983,807*	*1,018,612*	*1,048,484*	*1,085,780*	*1,117,860*
Ending Fund Balance - Capital Fund	$ 6,413,823	$ 4,797,077	$ 10,797,237	$ 3,493,206	$ 1,244,505	$ 1,735,297	$ 2,530,392	$ 6,165,231	$ 6,688,996	$ 1,412,053
Minimum Target - Capital Fund	582,608	611,139	676,468	749,160	776,530	781,473	785,238	813,580	818,882	877,061
Annual CIP (Inflated)	*$ 1,967,500*	*$ 3,528,265*	*$ 7,217,303*	*$ 8,004,116*	*$ 3,043,601*	*$ 560,503*	*$ 444,002*	*$ 3,171,403*	*$ 637,075*	*$ 6,556,802*

Lake Meridian Water District
Water Rate Study
Fund Activity

Funds	2022	2023	2024	2025	2026	2027	2028	2029	2030	2031
OPERATING										
Beginning Balance	$ 5,621,216	$ 1,029,301	$ 1,040,727	$ 898,902	$ 934,282	$ 1,079,789	$ 1,180,569	$ 1,222,334	$ 1,132,717	$ 1,145,619
plus: Net Cash Flow after Rate Increase	119,687	538,996	(141,825)	35,380	145,507	373,590	209,189	(89,617)	12,902	132,403
less: Transfer of Surplus to Capital Fund (If No Manual Entry)	(4,711,601)	(527,570)	-	-	-	(272,810)	(167,424)	-	-	-
Ending Balance	$ 1,029,301	$ 1,040,727	$ 898,902	$ 934,282	$ 1,079,789	$ 1,180,569	$ 1,222,334	$ 1,132,717	$ 1,145,619	$ 1,278,022
Minimum Funds to be Kept as Operating Reserves	*$ 857,751*	*$ 867,273*	*$ 897,593*	*$ 923,505*	*$ 955,988*	*$ 983,807*	*$ 1,018,612*	*$ 1,048,484*	*$ 1,085,780*	*$ 1,117,860*
Maximum Funds to be Kept as Operating Reserves	*$ 1,029,301*	*$ 1,040,727*	*$ 1,077,111*	*$ 1,108,206*	*$ 1,147,185*	*$ 1,180,569*	*$ 1,222,334*	*$ 1,258,180*	*$ 1,302,936*	*$ 1,341,432*
Info: No of Days of Cash Operating Expenses	*90 Days*	*90 Days*	*75 Days*	*76 Days*	*85 Days*	*90 Days*	*90 Days*	*81 Days*	*79 Days*	*86 Days*
Info: No of Days of Cash Operating Expenses Target	*90 Days*	*90 Days*	*90 Days*	*90 Days*	*90 Days*	*90 Days*	*90 Days*	*90 Days*	*90 Days*	*90 Days*
Difference over or (under) target funds	$ -	$ -	$ (178,209)	$ (173,924)	$ (67,396)	$ -	$ -	$ (125,463)	$ (157,318)	$ (63,410)
Manual Entry for Transfer to Capital Fund										
CAPITAL										
Beginning Balance	$ 2,745,116	$ 6,413,823	$ 4,797,077	$ 10,797,237	$ 3,493,206	$ 1,244,505	$ 1,735,297	$ 2,530,392	$ 6,165,231	$ 6,688,996
plus: Rate Funded System Reinvestment	350,000	350,000	241,598	267,225	408,088	411,049	698,101	722,733	731,894	844,366
plus: Transfers from Operating Fund	4,711,601	527,570	-	-	-	272,810	167,424	-	-	-
plus: Grants/ Donations/ CIAC	-	-	-	-	-	-	-	-	-	-
plus: Additional Proceeds (Costs)	209,000	650,000	800,000	-	-	-	-	-	-	-
plus: Capital Facilities Charge Revenue	351,880	351,880	351,880	351,880	351,880	351,880	351,880	351,880	351,880	351,880
less: Capital Facilities Charge Towards Debt	-	-	-	-	-	-	-	-	-	-
plus: Revenue Bond Proceeds	-	-	11,800,000	-	-	-	-	5,700,000	-	-
plus: PWTF Loans	-	-	-	-	-	-	-	-	-	-
plus: Other Loan Proceeds	-	-	-	-	-	-	-	-	-	-
plus: Interest Earnings	13,726	32,069	23,985	80,979	34,932	15,556	21,691	31,630	77,065	83,612
Total Funding Sources	$ 8,381,323	$ 8,325,342	$ 18,014,540	$ 11,497,322	$ 4,288,106	$ 2,295,801	$ 2,974,394	$ 9,336,634	$ 7,326,070	$ 7,968,855
less: Capital Expenditures	(1,967,500)	(3,528,265)	(7,217,303)	(8,004,116)	(3,043,601)	(560,503)	(444,002)	(3,171,403)	(637,075)	(6,556,802)
Ending Capital Fund Balance	$ 6,413,823	$ 4,797,077	$ 10,797,237	$ 3,493,206	$ 1,244,505	$ 1,735,297	$ 2,530,392	$ 6,165,231	$ 6,688,996	$ 1,412,053
Minimum Target Balance	*$ 582,608*	*$ 611,139*	*$ 676,468*	*$ 749,160*	*$ 776,530*	*$ 781,473*	*$ 785,238*	*$ 813,580*	*$ 818,882*	*$ 877,061*
COMBINED BEGINNING FUND BALANCE	*$ 8,366,331*	*$ 7,443,124*	*$ 5,837,804*	*$ 11,696,139*	*$ 4,427,488*	*$ 2,324,294*	*$ 2,915,866*	*$ 3,752,726*	*$ 7,297,948*	*$ 7,834,614*
COMBINED ENDING FUND BALANCE	*$ 7,443,124*	*$ 5,837,804*	*$ 11,696,139*	*$ 4,427,488*	*$ 2,324,294*	*$ 2,915,866*	*$ 3,752,726*	*$ 7,297,948*	*$ 7,834,614*	*$ 2,690,075*
DEBT RESERVE										
Beginning Balance	$ 1,306,242	$ 1,306,242	$ 1,306,242	$ 2,131,021	$ 2,131,021	$ 2,131,021	$ 2,131,021	$ 2,131,021	$ 2,529,432	$ 2,529,432
plus: Reserve Funding from New Debt	-	-	824,779	-	-	-	-	398,410	-	-
less: Use of Reserves for Debt Service	-	-	-	-	-	-	-	-	-	-
Ending Balance	$ 1,306,242	$ 1,306,242	$ 2,131,021	$ 2,131,021	$ 2,131,021	$ 2,131,021	$ 2,131,021	$ 2,529,432	$ 2,529,432	$ 2,529,432
Minimum Target Balance	$ 292,961	$ 94,050	$ 918,829	$ 918,829	$ 918,829	$ 918,829	$ 918,829	$ 1,317,240	$ 1,315,215	$ 1,223,190

THIS PAGE INTENTIONALLY BLANK.

Appendix U

Funding Program Summary

THIS PAGE INTENTIONALLY BLANK.

Funding Programs for
Drinking Water and Wastewater Projects

Updated 6-6-22

Type of Program	Pages
Planning/ Pre-Construction	2 - 5
Pre-Construction Only	6 - 7
Construction	8 - 12
Emergency	13 - 14

You can find the latest version of this document at http://www.infrafunding.wa.gov/resources.html

Please contact Cathi Read at cathi.read@commerce.wa.gov if you would like to update your program information

PLANNING **Programs**	**Eligible Projects**	**Eligible Applicants**	**Funding Available**	**How To Apply**
CDBG Community Development Block Grant – General Purpose Grant Fund – Planning-Only Activities	• Non-routine infrastructure plans • Feasibility studies • Community action plans • Low-income housing assessments	Projects must principally benefit low- to moderate-income people in non-entitlement cities and counties. Map of local governments served by state CDBG program List of local governments served by state CDBG program	Grant • Up to $30,000 for a single jurisdiction.	2022 CDBG General Purpose application materials are due June 1, 2022. Grant awards early September. **Contact:** Jon Galow 509-847-5021 jon.galow@commerce.wa.gov Visit www.commerce.wa.gov/cdbg and click on the General Purpose grant menu for information and forms.
SOURCE WATER PROTECTION GRANT PROGRAM	Source water protection studies (watershed, hydrogeologic, feasibility studies). Eligible activities can lead to reducing the risk of contamination of a system's drinking water sources(s), or they can evaluate or build resiliency for a public water supply. They must contribute to better protecting one or more public water supply sources.	Non-profit Group A water systems. Local governments proposing a regional project. Project must be reasonably expected to provide long-term benefit to drinking water quality or quantity.	Grants • Funding is dependent upon project needs, but typically does not exceed $30,000.	Applications accepted anytime; grants awarded on a funds available basis. **Contact:** Derrick Dennis 360-236-3122 derrick.dennis@doh.wa.gov or Deborah Johnson 360-236-3133 Deborah.johnson@doh.wa.gov http://www.doh.wa.gov/CommunityandEnvironment/DrinkingWater/SourceWater/SourceWaterProtection.aspx Grant guidelines https://www.doh.wa.gov/Portals/1/Documents/Pubs/331-552.pdf

PLANNING **Programs**	**Eligible Projects**	**Eligible Applicants**	**Funding Available**	**How To Apply**
ECOLOGY: INTEGRATED WATER QUALITY FUNDING PROGRAM State Water Pollution Control Revolving Fund (SRF) Centennial Clean Water Fund	Planning projects associated with publicly-owned wastewater and stormwater facilities. The integrated program also funds planning and implementation of nonpoint source pollution control activities.	Counties, cities, towns, conservation districts, or other political subdivision, municipal or quasi-municipal corporations, and tribes	Loan: $10,000,000 reserved for preconstruction statewide Interest rates (SFY 2023) • 6-20 year loans: 1.1% • 1-5 year loans: 0.5% Preconstruction set-aside (Distressed Communities) 50% forgivable principal loan and 50% loan	Applications due October 12, 2022. **Contact:** Jeff Nejedly 360-878-4913 Jnej461@ecy.wa.gov https://ecology.wa.gov/About-us/How-we-operate/Grants-loans/Find-a-grant-or-loan/Water-Quality-grants-and-loans
RD PRE-DEVELOPMENT PLANNING GRANTS (PPG) U.S. Dept. of Agriculture Rural Development – Rural Utilities Service – Water and Waste Disposal Direct Loans and Grants	Water and/or sewer planning; environmental work; and other work to assist in developing an application for infrastructure improvements.	Low-income, small communities and systems serving areas under 10,000 population.	Planning grant to assist in paying costs associated with developing a complete application for RD funding for a proposed project. Maximum $30,000 grant. Requires minimum 25% match.	Applications accepted year-round, on a fund-available basis. **Contact:** Marti Canatsey 509-367-8570 marlene.canatsey@usda.gov http://www.rd.usda.gov/wa
RD 'SEARCH' GRANTS: SPECIAL EVALUATION ASSISTANCE FOR RURAL COMMUNITIES U.S. Dept. of Agriculture Rural Development – Rural Utilities Service – Water and Waste Disposal Direct Loans and Grants	Water and/or sewer planning; environmental work; and other work to assist in developing an application for infrastructure improvements.	Low-income, small communities and systems serving areas under 2,500 population.	Maximum $30,000 grant. No match required.	Applications accepted year-round, on a fund-available basis. **Contact:** Marti Canatsey 509-367-8570 marlene.canatsey@usda.gov http://www.rd.usda.gov/wa

PLANNING **Programs**	**Eligible Projects**	**Eligible Applicants**	**Funding Available**	**How To Apply**
CERB PLANNING AND FEASIBILITY GRANTS Community Economic Revitalization Board – Project-Specific Planning Program	Project-specific feasibility and pre-development studies that advance community economic development goals for industrial sector business development.	Eligible statewide • Counties, cities, towns, port districts, special districts. • Federally recognized tribes • Municipal corporations, quasi-municipal corporations w/ economic development purposes.	Grant • Up to $50,000 per application. • Requires 20% (of total project cost) matching funds.	Applications accepted year-round. The Board meets six times a year. **Contact:** Janea Delk 360-725-3151 janea.delk@commerce.wa.gov
RCAC Rural Community Assistance Corporation Feasibility and Pre-Development Loans	Water, wastewater, stormwater, and solid waste planning; environmental work; and other work to assist in developing an application for infrastructure improvements.	Non-profit organizations, public agencies, tribes, and low-income rural communities with a 50,000 population or less, or 10,000 or less if proposed permanent financing is through USDA Rural Development.	• Typically up to $50,000 for feasibility loan. • Typically up to $350,000 for pre-development loan. • Typically up to a 1-year term. • 5% interest rate. • 1% loan fee.	Applications accepted anytime. **Contact**: Jessica Scott 719-458-5460 jscott@rcac.org Applications available online at http://www.rcac.org/lending/environmental-loans/
DWSRF Drinking Water State Revolving Fund Preconstruction Loans	Preparation of planning documents, engineering reports, construction documents, permits, cultural reports, environmental reports.	Group A (private and publicly-owned) community and not-for-profit non-community water systems, but not federal or state-owned systems.	• $500,000 maximum per jurisdiction • 0% annual interest rate • 2% loan origination fee • 2-year time of performance • 10-year repayment period	On-line applications accepted year-round until funding exhausted. Approximately $3 million available to award each year. **Contact:** Corina Hayes 360-236-3153 Corina.hayes@doh.wa.gov For information and forms visit: http://www.doh.wa.gov/DWSRF

PLANNING **Programs**	**Eligible Projects**	**Eligible Applicants**	**Funding Available**	**How To Apply**
DWSRF Drinking Water State Revolving Fund Consolidation Grant	Development of a feasibility study, engineering evaluation, design of a infrastructure project to consolidated one or more Group A water systems	Group A not-for-profit community water system, county, city, public utility district, or water district in Washington State Tribal systems are eligible provided the project is not receiving other national set-aside funding for the project.	• Up to $50,000 per project • Minimum of $10,000 • 2-year time of performance	Online applications accepted June 1 through June 30, 2022. **Contact:** Corina Hayes 360-236-3153 Corina.hayes@doh.wa.gov For information and forms visit: http://www.doh.wa.gov/DWSRF
Economic Development Administration (EDA) United States Department of Commerce **EDA Public Works Program:** Planning, Feasibility Studies, Preliminary Engineering Reports, Environmental Consultation for distressed and disaster communities.	Drinking water infrastructure; including pre-distribution conveyance, withdrawal/harvest (i.e. well extraction), storage facilities, treatment and distribution. Waste water infrastructure; including conveyance, treatment facilities, discharge infrastructure and water recycling.	Municipalities, counties, cities, towns, states, not-for-profit organizations, ports, tribal nations.	Grants: • EDA investment share up to $1M. • Cost sharing required from applicant **up to** 50% of total project cost. o Up to 100% for Tribal Nations	**Information:** EDA.gov **Contact:** Laura Ives 206-200-1951 lives@eda.gov **Apply at:** grants.gov

PRECONSTRUCTION ONLY **Programs**	**Eligible Projects**	**Eligible Applicants**	**Funding Available**	**How To Apply**
ECOLOGY: INTEGRATED WATER QUALITY FUNDING PROGRAM State Water Pollution Control Revolving Fund (SRF) Centennial Clean Water Fund Stormwater Financial Assistance Program (SFAP)	Design projects associated with publicly-owned wastewater and stormwater facilities. The integrated program also funds planning and implementation of nonpoint source pollution control activities.	Counties, cities, towns, conservation districts, or other political subdivision, municipal or quasi-municipal corporations, and tribes.	Loan: $10,000,000 reserved for preconstruction statewide Interest rates (SFY 2023) • 6-20 year loans: 1.1% • 1-5 year loans: 0.5% Preconstruction set-aside (Distressed Communities) 50% forgivable principal loan and 50% loan	Applications due October 12, 2022. A cost effectiveness analysis must be complete at the time of application. **Contact:** Jeff Nejedly 360-878-4913 Jnej461@ecy.wa.gov https://ecology.wa.gov/About-us/How-we-operate/Grants-loans/Find-a-grant-or-loan/Water-Quality-grants-and-loans
PWB PRE-CON Public Works Board Pre-Construction Program	Low-interest loans to fund pre-construction activities that prepare a specific project for construction. Water, sanitary sewer, stormwater, roads, streets, bridges, solid waste, and recycling facilities.	Counties, cities, special purpose districts, and quasi-municipal organizations that meet certain requirements. School districts and port districts are not eligible.	• Approximately $2,910,000 million available for preconstruction • Maximum loan amount $1 million per jurisdiction per biennium. • 5-year loan term. • Interest rates vary. • Pre-construction work must be completed within 2 years.	Next funding cycle opens June 6, 2022 and closes September 9, 2022. Check the Public Works Board website periodically at http://www.pwb.wa.gov to obtain the latest information on program details or to contact Public Works Board staff. **Contact:** Mark Rentfrow 360-529-6432 Mark.rentfrow@commerce.wa.gov

PRECONSTRUCTION ONLY **Programs**	**Eligible Projects**	**Eligible Applicants**	**Funding Available**	**How To Apply**
RCAC Rural Community Assistance Corporation Feasibility and Pre-Development Loans	Water, wastewater, stormwater, or solid waste planning; environmental work; and other work to assist in developing an application for infrastructure improvements.	Non-profit organizations, public agencies, tribes, and low-income rural communities with a 50,000 population or less, or 10,000 or less if proposed permanent financing is through USDA Rural Development.	• Typically up to $50,000 for feasibility loan. • Typically up to $350,000 for pre-development loan. • Typically a 1-year term. • 5% interest rate. • 1% loan fee.	Applications accepted anytime. **Contact**: Jessica Scott 719-458-5460 jscott@rcac.org Applications available online at http://www.rcac.org/lending/environmental-loans/
Economic Development Administration (EDA) United States Department of Commerce **EDA Public Works Program:** Design and/or Construction for distressed and disaster communities.	Drinking water infrastructure; including pre-distribution conveyance, withdrawal/harvest (i.e. well extraction), storage facilities, treatment and distribution. Waste water infrastructure; including conveyance, treatment facilities, discharge infrastructure and water recycling.	Municipalities, counties, cities, towns, states, not-for-profit organizations, ports, tribal nations.	Grants: • EDA investment share up to $1M. • Cost sharing required from applicant **up to** 50% of total project cost. o Up to 100% for Tribal Nations	**Information:** EDA.gov **Contact:** Laura Ives 206-200-1951 lives@eda.gov **Apply at:** grants.gov

CONSTRUCTION AND DESIGN/CONSTRUCTION Programs	**Eligible Projects**	**Eligible Applicants**	**Funding Available**	**How To Apply**
CDBG-GP Community Development Block Grant General Purpose Grants	• Final design and construction of wastewater, drinking water, side connections, stormwater, streets, and community facility projects. • Infrastructure in support of economic development or affordable housing.	Projects must principally benefit low- to moderate-income people in non-entitlement cities and counties. • Cities or towns with fewer than 50,000 people • Counties with fewer than 200,000 people Map of local governments served by state CDBG program List of local governments served by state CDBG program	Maximum grant amounts: • $1,000,000 for construction and acquisition projects. • $500,000 for local housing rehabilitation programs. • $250,000 for local microenterprise assistance programs.	2022 CDBG General Purpose application materials are due June 1, 2022. Grant awards early September. **Contact:** Jacquie Andresen 360-688-0822 Jacquie.andresen@commerce.wa.gov Visit www.commerce.wa.gov/cdbg and click on the General Purpose Grants menu for information and forms.
PWB Public Works Board Construction Program	New construction, replacement, and repair of existing infrastructure for drinking water, wastewater, stormwater, solid waste, recycling, road or bridge projects.	• Counties, cities, special purpose districts, and quasi-municipal organizations. • No school districts, port districts, or tribes per statute.	• Approximately $115 million available for construction projects. • Maximum loan amount $10 million per jurisdiction per biennium. • 20-year loan term. • Interest rates vary. • Construction must be completed within 5 years.	Next funding cycle opens June 6, 2022 and closes September 9, 2022. Check the Public Works Board website periodically at http://www.pwb.wa.gov to obtain the latest information on program details or to contact Public Works Board staff. **Contact:** Mark Rentfrow 360-529-6432 Mark.rentfrow@commerce.wa.gov Please visit: http://www.pwb.wa.gov

CONSTRUCTION AND DESIGN/CONSTRUCTION **Programs**	**Eligible Projects**	**Eligible Applicants**	**Funding Available**	**How To Apply**
DWSRF Drinking Water State Revolving Fund Construction Loan Program	Drinking water system infrastructure projects aimed at increasing public health protection. There is principal forgiveness for communities with high affordability index numbers.	Group A (private and publicly-owned) community and not-for-profit non-community water systems, but not federal or state-owned systems. Tribal systems are eligible provided the project is not receiving other national set-aside funding for the project.	Loan • 1.0% loan fee (water systems receiving subsidy are not subject to loan fees). • (Final rate is set September 1, 2022). • Loan repayment period: 20 years or life of the project, whichever is less. • No local match required.	Online applications available and accepted October 1 through November 30, 2022. **Contact:** Corina Hayes 360-236-3153 Corina.hayes@doh.wa.gov For information and forms visit: http://www.doh.wa.gov/DWSRF
ECOLOGY: INTEGRATED WATER QUALITY FUNDING PROGRAM State Water Pollution Control Revolving Fund (SRF) Centennial Clean Water Fund Stormwater Financial Assistance Program (SFAP)	Construction projects associated with publicly-owned wastewater and stormwater facilities. The integrated program also funds planning and implementation of nonpoint source pollution control activities.	Counties, cities, towns, conservation districts, or other political subdivision, municipal or quasi-municipal corporations, and tribes. Hardship Assistance Jurisdictions listed above with a population of 25,000 or less.	Loan: $250,000,000 available statewide. Interest rates (SFY 2023) • 21-30 year loans: 1.4% • 6-20 year loans: 1.1% • 1-5 year loans: 0.5% Hardship assistance for the construction of wastewater treatment facilities may be available in the form of a reduced interest rate, and up to $5,000,000 grant or loan forgiveness. Stormwater grant maximum award per jurisdiction: $5,000,000, with a required 25% match.	Applications due October 12, 2022. A cost effectiveness analysis must be complete at the time of application. **Contact:** Jeff Nejedly 360-878-4913 Jnej461@ecy.wa.gov https://ecology.wa.gov/About-us/How-we-operate/Grants-loans/Find-a-grant-or-loan/Water-Quality-grants-and-loans
RD U.S. Dept. of Agriculture Rural Development - Rural Utilities Service Water and Waste Disposal Direct Loans and Grants	Pre-construction and construction associated with building, repairing, or improving drinking water, wastewater, solid waste, and stormwater facilities.	• Cities, towns, and other public bodies, tribes and private non-profit corporations serving rural areas with populations under 10,000.	Loans; Grants in some cases • Interest rates change quarterly; contact staff for latest interest rates. • Up to 40-year loan term. • No pre-payment penalty.	Applications accepted year-round on a fund-available basis. **Contact:** Marti Canatsey 509-367-8570 marlene.canatsey@usda.gov http://www.rd.usda.gov/wa

CONSTRUCTION AND DESIGN/CONSTRUCTION Programs	**Eligible Projects**	**Eligible Applicants**	**Funding Available**	**How To Apply**
CERB Community Economic Revitalization Board Construction Program	Public facility projects required by private sector expansion and job creation. Projects must support significant job creation or significant private investment in the state. • Bridges, roads and railroad spurs, domestic and industrial water, sanitary and storm sewers. • Electricity, natural gas and telecommunications • General purpose industrial buildings, port facilities. • Acquisition, construction, repair, reconstruction, replacement, rehabilitation	• Counties, cities, towns, port districts, special districts • Federally-recognized tribes • Municipal and quasi-municipal corporations with economic development purposes.	Loans; grants in unique cases • Projects without a committed private partner allowed for in rural areas. • $5 million maximum per project, per policy. • Interest rates: 1-3% Based on Debt Service Coverage Ratio (DSCR), Distressed County, and length of loan term. • 20-year maximum loan term • Match for committed private partners: 20% (of total project cost). • Match for prospective partners: 50% (of total project cost). • Applicants must demonstrate gap in public project funding and need for CERB assistance. • CERB is authority for funding approvals.	Applications accepted year-round. The Board meets six times a year. **Contact:** Janea Delk 360-725-3151 janea.delk@commerce.wa.gov
RCAC Rural Community Assistance Corporation Intermediate Term Loan	Water, wastewater, solid waste and stormwater facilities that primarily serve low-income rural communities.	Non-profit organizations, public agencies, tribes, and low-income rural communities with a 50,000 population or less.	• For smaller capital needs, normally not to exceed $100,000. • Typically up to a 20-year term • 5% interest rate • 1% – 1.125% loan fee	Applications accepted anytime. **Contact**: Jessica Scott 719-458-5460 jscott@rcac.org Applications available online at http://www.rcac.org/lending/environmental-loans/
RCAC Rural Community Assistance Corporation Construction Loans	Water, wastewater, solid waste and stormwater facilities that primarily serve low-income rural communities. Can include pre-development costs.	Non-profit organizations, public agencies, tribes, and low-income rural communities with a 50,000 population or less, or 10,000 populations or less if using USDA Rural Development financing as the takeout.	• Typically up to $3 million with commitment letter for permanent financing • Security in permanent loan letter of conditions • Term matches construction period. • 5% interest rate • 1.125% loan fee	Applications accepted anytime. **Contact**: Jessica Scott 719-458-5460 jscott@rcac.org Applications available online at http://www.rcac.org/lending/environmental-loans/

CONSTRUCTION AND DESIGN/CONSTRUCTION Programs	**Eligible Projects**	**Eligible Applicants**	**Funding Available**	**How To Apply**
Energy Retrofits for Public Buildings Program: **Energy Efficiency Grant** *(formerly Energy Efficiency & Solar)* Washington State Department of Commerce	Retrofit projects that reduce energy consumption (electricity, gas, water, etc.) and operational costs on existing facilities and related projects owned by an eligible applicant. Projects must utilize devices that do not require fossil fuels whenever possible.	• Washington State public entities, such as cities, towns, local agencies, public higher education institutions, school districts, federally recognized tribal governments, and state agencies. • Some percentage of funds are reserved for projects in small towns or cities with populations of 5,000 or fewer. • Priority will be given to applicants who have not received funding previously, certain priority communities, and school districts that reduce PCB's through lighting upgrades.	2022: $1.8 million • Maximum grant: $350,000 • Minimum match requirements will apply. • Other State funds cannot be used as match. • Applications due May 25, 2022.	**Contact:** Kristen Kalbrener 360-515-8112 energyretrofits@commerce.wa.gov Visit https://www.commerce.wa.gov/growing-the-economy/energy/energy-efficiency-and-solar-grants/ for more information.
Energy Retrofits for Public Buildings: **Solar Grants** *(formerly Energy Efficiency & Solar)* Washington State Department of Commerce	Purchase and installation of grid-tied solar photovoltaic (electric) arrays net metered with existing facilities owned by public entities. Additional points for 'Made in Washington' components.	• Washington State public entities, such as cities, towns, local agencies, public higher education institutions, school districts, federally recognized tribal governments, and state agencies. • Minimum payback period of 35 years. Priority will be given to applicants who have not received funding previously.	2022: $1.2 million • Maximum amount per awardee: $250,000 • Minimum match requirements will apply. • Applications due May 25, 2022.	**Contact:** Jill Eikenhorst 360-522-0000 energyretrofits@commerce.wa.gov Visit https://www.commerce.wa.gov/growing-the-economy/energy/energy-efficiency-and-solar-grants/ for more information.

CONSTRUCTION AND DESIGN/CONSTRUCTION Programs	**Eligible Projects**	**Eligible Applicants**	**Funding Available**	**How To Apply**
Economic Development Administration (EDA) United States Department of Commerce **EDA Public Works Program:** Design and/or Construction for distressed and disaster communities.	Drinking water infrastructure; including pre-distribution conveyance, withdrawal/ harvest (i.e. well extraction), storage facilities, treatment and distribution. Waste water infrastructure; including conveyance, treatment facilities, discharge infrastructure, water recycling.	Municipalities, counties, cities, towns, states, not-for-profit organizations, ports, tribal nations.	Grants: • EDA investment share up to $3M. • Cost sharing required from applicant **up to** 50% of total project cost. o Up to 100% for Tribal Nations	**Information:** EDA.gov **Contact:** Laura Ives 206-200-1951 lives@eda.gov **Apply at:** grants.gov
RURAL WATER REVOLVING LOAN FUND	Short-term costs incurred for replacement equipment, small scale extension of services, or other small capital projects that are not a part of regular operations and maintenance for drinking water and wastewater projects.	Public entities, including municipalities, counties, special purpose districts, Native American Tribes, and corporations not operated for profit, including cooperatives, with up to 10,000 population and rural areas with no population limits.	• Loans may not exceed $100,000 or 75% of the total project cost, whichever is less. Applicants given credit for documented project costs prior to receiving the loan. • Interest rates at the lower of the poverty or market interest rate as published by USDA RD RUS, with a minimum of 3% at time of closing. • Maximum repayment period is 10 years. Additional ranking points for a shorter repayment period. The repayment period cannot exceed the useful life of the facilities.	Applications accepted anytime. **Contact**: Tracey Hunter Evergreen Rural Water of WA 360-462-9287 thunter@erwow.org Download application online: http://nrwa.org/initiatives/revolving-loan-fund/
Connecting Housing to Infrastructure Program (CHIP) Washington State Department of Commerce	Housing projects with at least 25% of units affordable for at least 25 years. Funding goes toward water, sewer, and stormwater infrastructure improvements for eligible projects, as well as toward system development charges, which are waived to encourage affordable housing.	Cities, counties, and utility districts located in a jurisdiction which has a dedicated sales tax for affordable housing. The local jurisdiction will sponsor/ partner with a housing developer on the project.	$7.6 million remaining for Third Round: • $4.1 million for utility infrastructure improvements • $3.5 million for waived system development charges (SDCs) Maximum request: $1.0 million	**Contact:** Eric Guida 360-725-3044 Eric.guida@commerce.wa.gov Visit Growth Management Grants, bottom of the page.

EMERGENCY **Programs**	**Eligible Projects**	**Eligible Applicants**	**Funding Available**	**How To Apply**
RD – ECWAG U.S. Dept. of Agriculture Rural Development Emergency Community Water Assistance Grants	Domestic water projects needing emergency repairs due to an incident such as: a drought; earthquake; flood; chemical spill; fire; etc. A significant decline in quantity or quality of potable water supply that was caused by an emergency.	Public bodies, tribes and private non-profit corporations serving rural areas with populations under 10,000.	Grant; pending availability of funds • $150,000 limit for incident related emergency repairs to an existing water system. • $500,000 limit to alleviate a significant decline in potable water supply caused by an emergency.	Applications accepted year-round on a fund-available basis. **Contact:** Marti Canatsey 509-367-8570 marlene.canatsey@usda.gov http://www.rd.usda.gov/wa
DWSRF Department of Health – Drinking Water State Revolving Fund Emergency Loan Program	Will financially assist eligible communities experiencing the loss of critical drinking water services or facilities due to an emergency.	• Publicly or privately owned (not-for-profit) Group A community water systems with a population of fewer than 10,000. • Transient or non-transient non-community public water systems owned by a non-profit organization. Non-profit non-community water systems must submit tax-exempt documentation. • Tribal systems are eligible provided the project is not receiving other national set-aside funding for the project.	Loan • Interest rate: 0%, no subsidy available • Loan fee: 1.5% • Loan term: 10 years • $500,000 maximum award per jurisdiction. • Time of performance: 2 years from contract execution to project completion date. • Repayment commencing first October after contract execution.	To be considered for an emergency loan, an applicant must submit a completed emergency application package to the department. **Contacts:** Corina Hayes 360-236-3153 Corina.hayes@doh.wa.gov For information and forms visit: http://www.doh.wa.gov/DWSRF
PWB Public Works Board Emergency Loan Program: Repair, replace, rehabilitate, or reconstruct eligible systems to current standards for existing users.	A public works project made necessary by a natural disaster, or an immediate and emergent threat to the public health and safety due to unforeseen or unavoidable circumstances. Demonstrate financial need through inadequate local budget resources.	Counties, cities, special purpose districts, and quasi-municipal organizations. No school districts, port districts, or tribes per statute. Water, sanitary sewer, storm water, roads, streets, bridges, solid waste, and recycling facilities.	• Approximately $5 million for emergency loan funding. • Maximum loan amount $1 million per jurisdiction per biennium. • 20-year loan term or life of the improvement, whichever is less. • Interest rates vary. • Application cycle is open until available funds are exhausted.	Check the Public Works Board website periodically at: http://www.pwb.wa.gov to obtain the latest information on program details or to contact Public Works Board staff. **Contact:** Mark Rentfrow 360-529-6432 Mark.rentfrow@commerce.wa.gov

EMERGENCY **Programs**	**Eligible Projects**	**Eligible Applicants**	**Funding Available**	**How To Apply**
ECOLOGY – Clean Water State Revolving Fund Emergency Funding Program	Water quality-related projects that meet the definition of "environmental emergency" in WAC 173-98-030(27) and have received a Declaration of Emergency from the local government. Eligible projects may result from a natural disaster or an immediate and emergent threat to public health due to water quality issues resulting from unforeseen or unavoidable circumstances.	Counties, cities, towns, federally-recognized tribes, and special purpose districts serving a population of 10,000 or less.	Loan • 10-year loan term or the life of the project, whichever is less. • 0.0% interest rate. • $5,000,000 maximum total per year. • $500,000 maximum per jurisdiction per year. • 2 years to complete project after loan execution. • Repayment begins 1 year after completion.	Applications accepted any time. **Contact:** Eliza Keeley-Arnold 564-999-1269 Ekee461@ecy.wa.gov Funding Guidelines and Applicant Prep Tool: https://apps.ecology.wa.gov/publications/documents/2010059.pdf
HAZARD MITIGATION GRANT PROGRAM FEMA/WA Emergency Management Division	Disaster risk-reduction projects and planning after a disaster declaration in the state.	Any state, tribe, county, or local jurisdiction (incl., special purpose districts) that has a current FEMA-approved hazard mitigation plan.	Varies depending on the level of disaster, but projects only need to compete at the state level. Local jurisdiction cost-share: 12.5%	Applications will be opened after a disaster declaration. **Contact**: Tim Cook State Hazard Mitigation Officer 253-512-7072 Tim.cook@mil.wa.gov
PUBLIC ASSISTANCE PROGRAM FEMA/WA Emergency Management Division	Construction, repair to, and restoration of publicly owned facilities damaged during a disaster. Debris-removal, life-saving measures, and restoration of public infrastructure.	State, tribes, counties, and local jurisdictions directly affected by the disaster.	Varies depending on the level of disaster and total damage caused.	Applications are opened after disaster declaration. **Contact:** Gary Urbas Public Assistance Project Manager 253-512-7402 Gary.urbas@mil.wa.gov
RURAL WATER REVOLVING LOAN FUND Disaster area emergency loans	Contact staff for more information on emergency loans.	Public entities, including municipalities, counties, special purpose districts, Native American Tribes, and corporations not operated for profit, including cooperatives, with up to 10,000 population and rural areas with no population limits.	90-day, no interest, disaster area emergency loans with immediate turn-around. Download application online: http://nrwa.org/initiatives/revolving-loan-fund/	Applications accepted anytime. **Contact**: Tracey Hunter Evergreen Rural Water of WA 360-462-9287 thunter@erwow.org